ALTEC SERVICE COMPANY

MOTIOGRAPH SOUND EQUIPMENT BULLETIN

MAY 25, 1957

ISSUE #2 parts 1 and 2 (full version)

Scanned by Patrick Jankowiak KD5OEI

What's in here?
The Altec Service Company was a branch of Altec in the busines of servicing all kinds of movie theater audio and film gear. This is but one of many volumes concerning this work. It is invaluable for anyone seeking more knowledge of old-time high fidelity sound reproduction systems made from the 1930's to the 1950's. This includes Schematics, Factory mods, Factory upgrades, Setup instructions, Confidential Field Bulletins, and other generally unpublished information not available anywhere else

What does it pertain to?
According to the table of contents…

Amplifiers	- some 15 different models, several WE, a couple high power.
Baffles	- at least 6 kinds
Control Cabinets	- three, plus variants
Horns	- two kinds of HF horns
Loudspeakers	- fourteen varieties comprising several theater systems
Motors	- two kinds of projector motors
Networks	- three. These adjust the characteristics for the entire system. This is often overlooked or misunderstood by WE fans today.
Power Units	- eight kinds of power supplies
Reproducers	- these get the audio off the film and have their own characteristics.
Switching Panels	- three variants
Systems	- nine types
Transformers	- The SE-7040
Transmission Data	- EQ methods and curves that may be of use.

What kinds of equipment?
Many Western Electric and several less-known but fine other kinds (Bogen etc). Simplex Projectors – as these are after all where the movie sound comes from!

What is the resolution?
300DPI

Dedication:

This scan is dedicated to peace, spiritual and military strength, the rights of individuals to bear arms, and to assemble, speak the truth openly, and worship freely, and to goodwill among all truly God-fearing peoples.

None of these are mutually exclusive in a free society.

6-6-57

MOTIOGRAPH

SOUND EQUIPMENT BULLETIN

INDEX

EQUIPMENT	PAGE NO.
AMPLIFIERS	
87-E, Schematic	5030.11
87-E, Wiring Diagram	5030.12
118-A	5030.51
118-A, Gain Control Adjustment	5385.41
118-A, Schematic	5030.55
118-A, Wiring Diagram	5030.56
PA-7501, Schematic	5031.11
MA-7502, Schematic	5031.12
PA and MA-7505	5031.51
PA-7505, Schematic	5031.61
PA-7505, Wiring Diagram	5031.62
MA-7505, Schematic	5031.63
MA-7505, Wiring Diagram	5031.64
PA and MA-7505, Tube Socket Meter Readings	5031.51
PA and MA-7505-A	5032.01-.05
PA-7505-A, Wiring Diagram	5032.12
PA-7505-A, Schematic	5032.09
MA-7505-A, Schematic	5032.15
MA-7505-A, Wiring Diagram	5032.14-2
MA-7505-T, Schematic	5032.25
7505-A, Equalization Curves, LSS-7540	5032.21
PA and MA-7505-A, Tube Socket Meter Readings	5032.09 5032.15
SE-7628 Suppressor Amplifier	5034.71-.72
RSE-7628 - Schematic	5034.75
TA-7466 Type	5034.01
TA-7466A Schematic	5034.11
TA-7466A Wiring Diagram	5034.12
Amplifiers, Modification, TA-7466 to TA-7466-A	5034.01
TA-7466-TA-7466-A, Tube Socket Meter Readings	5034.01
TA-7467	5034.51-.52
TA-7467A, Schematic	5034.61
TA-7467A, Wiring Diagram	5034.62
Modification, TA-7467-A to TA-7467	5034.51
TA-7467-TA-7467-A, Tube Socket Meter Readings	5034.51
TA-7466-TA-7466-A and TA-7467-TA-7467-A Transmission Data	5034.52
BAFFLES	
TA-7396	5385.23
TA-7397	5385.33
TA-7396 and TA-7397, Photo WE-7552	5220.51
SE-7037	5220.11
SE-7019 and SE-7019-A	5220.21
CONTROL CABINETS	
PA-7015 and PA-7016 Aux. Cont., Ass'y	5150.11
PA-7500 (TA-7468 and TA-7469 Aux. Cont.), Assembly	5150.13
PA-7500 (TA-7468 Auxiliary Cont.), Schem. and W. D.	5150.14
PA-7500 (TA-7468), Dial Markers (Separate 8-1/2 x 11 sheet)	AP-1504

EQUIPMENT	PAGE NO.
HORNS	
SE-7029 (HF)	5220.11
SE-7016 (HF)	5220.21
LOUDSPEAKERS	
SE-7501 Monitor Replacement Parts	5385.51
L.S. Unit, SE-7034 (LF)	5220.11
L.S. Unit, SE-7020 (LF)	5220.21
L.S. Unit, SE-7015 (HF)	5220.11
L.S. System, TA-7396 Baffle, SE-7049 LF Speaker, SE-7016 HF Horn, SE-7015 HF Unit	5385.23
L.S. System, TA-7397 Baffle, SE-7034 LF Speaker, SE-7016 or SE-7034 HF Horn, SE-7015 HF Unit	5385.33
L.S. System, SE-7508	5220.11-.13
L.S. System, SE-7511	5220.21-.24
L.S. System, SE-7522	5220.31-.34
MOTORS	
General	5250.1
SH-2673	5250.11-2
SH-7070	5250.15
NETWORKS	
SE-7018, Characteristics	5220.21
SE-7018, Schem. & Wiring Diagram	5210.11
SE-7038, Characteristics	5220.11
SE-7038, Schem. & Wiring Diagram	5210.12
TA-7473, Schem. & Wiring Diagram	5210.21
POWER UNITS	
TA-4144-A, Adjustments	5385.32
TA-4144-A, Schematic	5310.11
TA-4144-A, Wiring Diagram	5310.12
TA-7471, Adjustments	5385.32
TA-7471, Schematic	5311.11
TA-7471, Schematic	5311.12
PU-7500, Assembly	5312.11
PU-7500, Wiring Diagram	5312.12
PU-7502, Schematic	5312.13
PU-7502, Wiring Diagram	5312.14
SE-7075, Auxiliary	5313.03
SE-7520	5313.01
SE-7520, Schem. and Wiring Diagram	5313.02
SE-7520, Addendum #1	5312.99
SE-7570-A, Schem. and Wiring Diag.	5313.07
SE-7570 Exc. Lamp P.U.	5313.04-.06
SE-7570-D, Schem. & Wiring Diag.	5313.09

Issued by
Engineering Department
Printed in U. S. A.

Issue #2

MOTIOGRAPH

INDEX SOUND EQUIPMENT BULLETIN

EQUIPMENT	PAGE NO.
REPRODUCERS	
AAA - Magnetic	5351.41-.52
Addendum #1	5351.53-.54
HU, K, MK	5350.11
MK, Photos	5350.13-.18
MK, Parts List	5350.19-.20
SH-7500, Installation Notes	5351.01-.04
Adapter Plates	5351.01
Assembly, WE-7521	5351.35
Cleaning	5351.03
Drive Sprocket Assemblies	5351.01-.02
Film Threading Diagram, WE-7507	5351.37
Impedance Roller Assembly, RSH-7003	5351.39
Lens Tube Adjustment	5351.03-.04
Lubrication	5351.03
SH-7005 & SH-7006, Pad Roller Adj.	5351.02-.03
Parts List, WE-7522	5351.21-.24
P.E.C. Bracket, Assembly WE-7529	5351.36
Photo, WE-7553	5351.31
Photo, WE-7550	5351.32
Push-Pull Modification	5351.03-.04
Push-Pull Modification - Schem. and Wiring Diagram, WE-7554	5351.40
Schematic & Wiring Diag. WE-7506	5351.38
Sound Head Support Brackets	5351.01
Take-Up Assemblies	5351.01
Transmission Data	5034.52
SWITCHING PANEL	
SE-7512 (M-10 Dual Systems)	5385.12
SE-7512 (M-14A and M-15A Systems)	5385.32
SE-7512 (M-17 Systems)	5385.41
SE-7512, Schematic and Wiring Diag.	5270.11
SE-7512, Repairs and Replacement	5270.09
SYSTEMS	
Components	5380.01
M-7, M-9, M-9A, M-9 Dual, Installation Notes & Transmission Data	5385.01-.02
9 Type, 3-Machine Operation	5385.05 to 5385.06.1
M-10, M-10 Dual, Installation Notes and Transmission Data	5385.11-.13
M-11, M-11 Dual, M-13A, Installation Notes and Transmission Data	5385.21-.23
M-13, Schematic	5385.29
M-13A, Schematic	5385.30
M-14A and M-15A, Installation Notes and Transmission Data	5385.31-.34
M-14A and M-15A, Schematic	5385.39
M-17, Installation Notes	5385.41
M-9B, M-911 and M-911 Dual, Installation Notes	5385.51-.52
General, RG-62-U Coaxial Cable	5380.03
TRANSFORMERS	
SE-7040, Impedance Matching	5220.32

EQUIPMENT	PAGE NO.
TRANSMISSION DATA	
Exciter Lamp - Relative Sensitivity -	Refer to E. B.'s, Systems
Transmission Data -	Refer to E. B.'s, Systems and Reproducers
PA and MA-7505-A Amplifiers	5032.21
TA-7466/TA-7466-A and TA-7467/TA-7467-A Amplifiers	5034.52

Issued by
Engineering Department
Printed in U. S. A.

87-E AMPLIFIER

ISSUE:		APP'D
1551	11-1-40	WWS

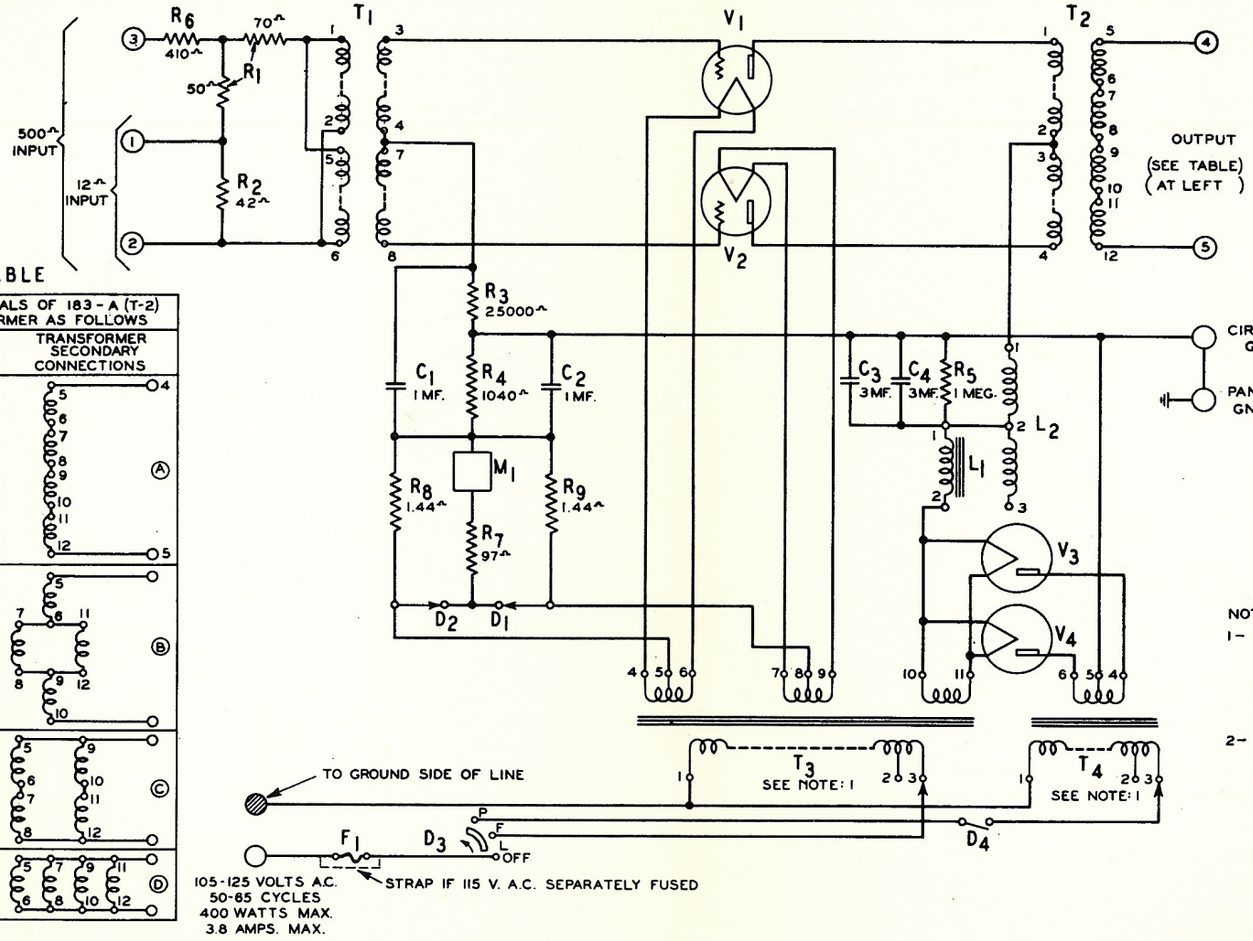

TABLE

STRAP TERMINALS OF 183-A (T-2) OUTPUT TRANSFORMER AS FOLLOWS		
AMPL. OUTPUT IMPED.	RECOMENDED LOAD IMPEDANCE	TRANSFORMER SECONDARY CONNECTIONS
12Ω	25Ω TO 48Ω	(A)
6.75Ω	13.0Ω TO 25Ω	(B)
3Ω	6Ω TO 13.0Ω	(C)
0.75Ω	1.5Ω TO 3.5Ω	(D)

✱ INDICATES NON COMPONENT ITEM WHICH MUST BE ORDERED SEPARATELY.

DESIG.	APPARATUS
✱ V1, V2	284-D VACUUM TUBE
✱ V3, V4	249-B VACUUM TUBE
R1	19-DL RESISTANCE
R2	I.R.C. RESISTANCE 42Ω ±5% TYPE EM WITH #2 TERMINALS.
R3	I.R.C. RESIS. 25,000Ω ±10% TYPE BT-2
R4	I.R.C. RESISTOR 1040Ω ±5% TYPE HY WITH #3 TERMINALS
R5	I.R.C. RESISTOR TYPE F3, 1 MEG., 3 WATTS, 1200 VOLTS NORMAL.
R6	I.R.C. RESISTOR 410Ω ±5% TYPE EN WITH #2 TERMINALS.
R7	D-97714 RESISTANCE
R8, R9	D-97989 RESISTANCE
L1	240-B RETARDATION COIL
L2	D-95796 RETARDATION COIL
T1	D-95658 INPUT TRANS.
T2	183-A OUTPUT TRANS
T3	352-Y TRANS.
T4	353-D TRANS.
C1, C2	229-C CONDENSER
C3, C4	296-A CONDENSER
F1	4306 CLEARSITE PLUG FUSE, 6 AMP.
D3	80178 H & H SWITCH WITH BLACK KNOB.
D4	21808-F H & H SWITCH
D1, D2	3592-M H & H MOMENTARY SWITCH NORMALLY CLOSED
M1	KS-7535 WESTINGHOUSE MILLIAMETER (0-150%) SCALE)

NOTES:

1- CONNECTIONS, AS FURNISHED, TO TERMINALS 1 & 3 OF T_3 & T_4 ARE FOR LINE VOLTAGES AVERAGING BETWEEN 115 AND 125 VOLTS. FOR LINE VOLTAGES AVERAGING BETWEEN 105 AND 115 VOLTS CONNECT TO TERMINALS 1 & 2 OF T_3 & T_4. ⊘ DENOTES GROUND SIDE OF LINE.

2- DIMENSIONS - 19¼" H x 19" W x 12¾" D
WEIGHT - 141 LBS.
MOUNTS ON - AMPLIFIER RACK
GAIN (DB) 9.5 (FROM 86 AMPL.), 8.9 (FROM 500Ω), 11.2 (FROM 12Ω).
OUTPUT (MAXIMUM) - 200-5000 CYCLES - 53 WATTS (39.5 DB)
50 CYCLES - 50 WATTS (39.2 DB)
2% TOTAL HARMONIC
NOISE LEVEL (BELOW .006 WATT UNWEIGHTED)
- 30 DB (AVERAGE) IF USED ALONE
- 20 DB (AVERAGE) IF USED WITH 1086 AMPL. SET FOR 78 DB GAIN.
FINISH - ALUMINUM GRAY

3- B-87-A, 87-C OR 87-E AMPLIFIERS MAY BE OPERATED IN PARALLEL WITH EACH OTHER (BOTH INPUT AND OUTPUT), BUT NOT WITH AN 87-A AMPLIFIER.

4- ORDER REPLACEMENT PARTS PER WIRING DIAGRAM AASR-4549.

SUPERSEDES 87-C AMPLIFIER

AASR-4549 CIRCUIT LABEL

ASSOCIATED DRAWINGS

87-E AMPLIFIER

SCHEMATIC

ALTEC SERVICE CORPORATION, N.Y.

DRAWN BY	DATE	APP'D
CHECKED BY	DATE	WWS 11-1-40

SCALE

AASO-8518

PRINTED IN UNITED STATES OF AMERICA

5030.12

87-E AMPLIFIER

87E AMPLIFIER

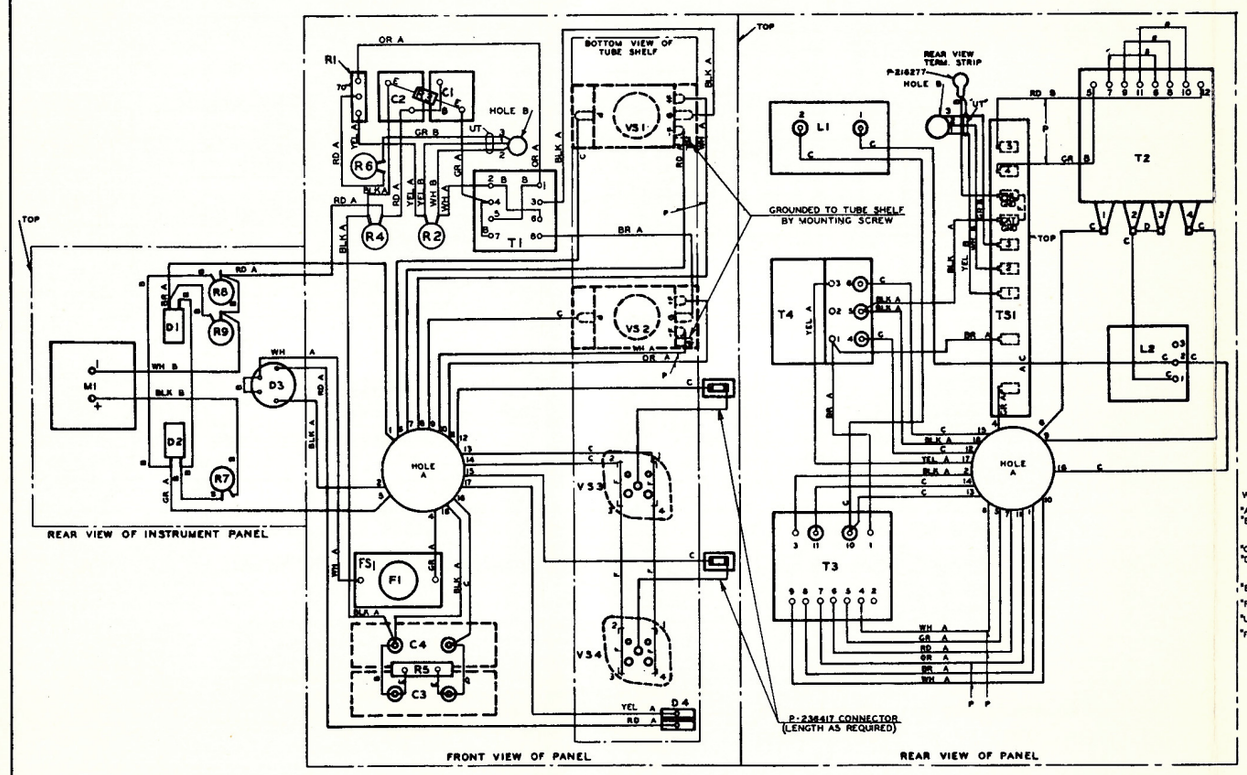

DESIG.	APPARATUS
C1,C2	228 C CONDENSER
C3,C4	296 A CONDENSER
D3	80178 H. & H. SWITCH WITH BLACK KNOB
D4	21806-F H & H SWITCH
D1, D2	3592M H&H SWITCH NORMALLY CLOSED
F1	4306 CLEARSITE PLUG FUSE, 8 AMP.
L1	240B RETARD COIL
L2	D-95796 RETARD COIL
M1	K3-7528 WESTINGHOUSE MILLIAMMETER
R1	MDL RESISTANCE
R2	IRC RESISTOR 48Ω ±5% TYPE EM WITH Ø2 TERMINALS (20 WATTS)
R3	IRC. RES15. TYPE BTZ, 25000Ω ±10% 2 WATTS
R4	IRC. TYPE HY RESISTOR 1040Ω ±5% WITH Ø3 TERMINALS (65 WATTS)
R5	I.R.C. RESISTOR TYPE F3, 1 MEG., 3 WATTS, 1200 VOLTS
R6	IRC. RESISTOR 410Ω ±5%, TYPE EM WITH Ø2 TERMINALS (40 WATTS)
R7	D-97714 RESISTANCE
R8 R9	D-97989 RESISTANCE
T1	D-95858 INPUT TRANSFORMER
T2	183A OUTPUT TRANSFORMER
T3	352Y TRANSFORMER
T4	353D TRANSFORMER
VS1, VS2	148-A V.T. SOCKET
VS3,VS4	142-A V.T. SOCKET
TS1	ESO-822741-1
FS1	62589 BRYANT PLUG FUSE CUTOUT BASE

LEGEND

WIRES MARKED:

"A"- IN CABLE #1 / "B"- OPEN FORMED } #16 AWG SOLID WIRE PER KS-7812, BLACK, UNLESS OTHERWISE SPECIFIED.

"C"- IN CABLE #1 / "D"- OPEN FORMED } #14 AWG COPPER WIRE, 7 STRANDS, 5/64" WALL, VARNISHED CAMBRIC, WEATHERPROOFED COTTON BRAID. (SIMPLEX CABLE #1042)

"E" ARE FURNISHED WITH APPARATUS.

"P" ARE PAIRED.

"UT" ARE SHIELDED TRIPLES, SHIELDED PER M-19089.

"F" ARE #14 TINNED COPPER WIRE.

NOTES:
1- STRAP OUT F-1 IF 115 V.A.C. SUPPLY IS SEPARATELY FUSED.
2- REMOVE ALL GREASE AND FOREIGN MATERIAL FROM ISOLANTITE TERMINALS AFTER CONNECTIONS HAVE BEEN MADE

TRIMMING LINE

PRINTED IN U.S.A.

AASO-8518 SCHEMATIC
ASSOCIATED DRAWINGS
87-E AMPLIFIER
CIRCUIT LABEL
ALTEC SERVICE CORPORATION
DRAWN BY ____ DATE ____
CHECKED BY ____ DATE ____
APPD WWE 11-1-60
SCALE
AASR-4549

1. DESCRIPTION - The W. E. 118-A Amplifier is a medium gain, high power, two stage, push-pull bridging amplifier.

2. MOUNTING - 19" Relay Rack

3. CHARACTERISTICS -

Gain - 36 db (12 ohm input) (As used with Motiograph Sound Systems)

Volume Control - Continuous - Not calibrated

Impedance - Input 1-25,000 ohms
Output 1-1,000 ohms

Power Output - 50 watts, 39.2 db/.006W - 5% harmonic distortion
25 watts, 36.2 db/.006W - 1% " "

Noise Level -25 db/.006W

Vacuum Tubes - 2 - 6J7 or 6J7G, 4 - 6L6 or 6L6G, 1 - 5Z3

Power Supply Required - 200W, 115V, 60 cycles

Frequency Response - Flat 55-8000 cps

Dimensions - 7-1/4" High, 12" Wide, 18-13/16" Long

Weight - 35 pounds

ASSOCIATED DRAWINGS

ESR-614686	Schematic
ESR-613790	Wiring Diagram

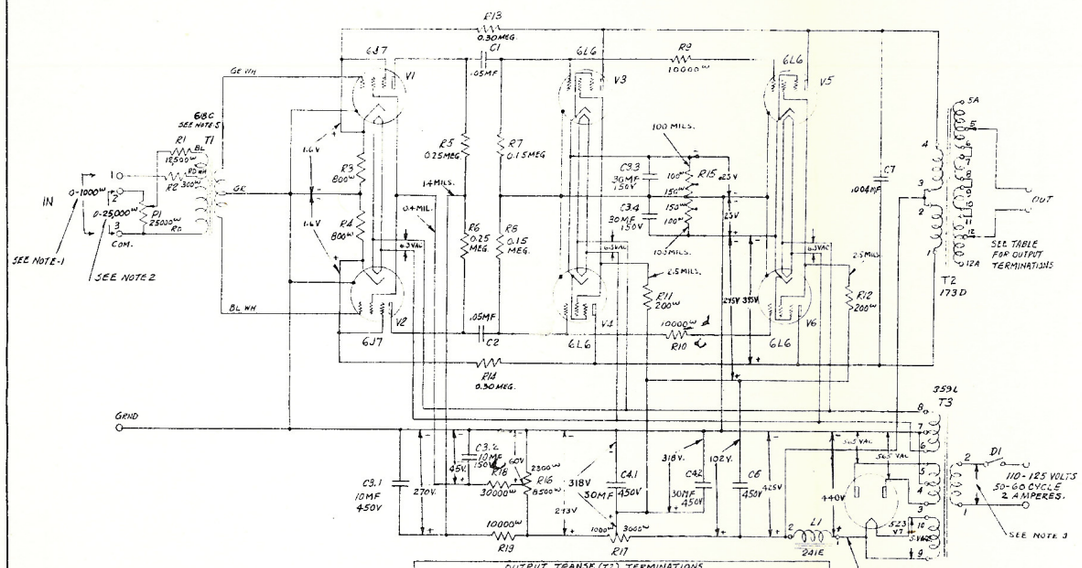

OUTPUT TRANSF. (T2) TERMINATIONS

NOMINAL LOAD IMPEDANCE IN OHMS	WORKING RANGE OF LOAD IMPEDENCE	STRAP TERMINALS	OUTPUT CONNECTIONS
500	250 TO 1000	6T07 8T09 10T011	5A AND 12A
125	62 TO 250	6T07 10T011 5AT09 8T012A	5A AND 12A
30	20 TO 62	6T07 8T09 10T011	5 AND 12
17	10 TO 20	7T09 8T010 6T07 10T011	5 AND 12
7.5	4 TO 10	6T07 10T011 8T012 5T09	5 AND 12
2	1 TO 4	5T07T09T011 6T08T010T012	5 AND 12

NOTES: -

1 - SOURCE IMPEDENCE 0 TO 1000Ω MAX. GAIN CORRECTION.

2 - SOURCE IMPEDENCE 0 TO 25,000Ω DIVIDING AMP. CORRECTION.

3 - THE VOLTAGE AND CURRENT VALUES SHOWN ARE FOR A LINE VOLTAGE OF 117-1/2 VOLTS AND A LINE CURRENT OF 1.65 AMPS.

4 - THE VALUES OF CURRENT, VOLTAGE AND RESISTANCE SHOWN ARE AVERAGE VALUES AND ARE INTENDED ONLY AS AN AID IN SERVICING THE AMPLIFIER. READINGS SHOULD BE TAKEN WITH INSTRUMENT OF A "VOLT-OHMMETER" WHOSE RESISTANCE IS AT LEAST 1000 OHMS PER VOLT.

5 - THE 6J6C INPUT TRANS. REPLACES THE 68RF INPUT TRANS. WHEN NECESSARY. ALSO R1 0.15 MEG. RESISTOR MAY AID IN REPLACING THE 68Ω RESISTORS. NOTE: IT IS IMPORTANT THAT R1 AND R2 BE OF THE SAME VALUE.

ASSEM-ESR-614703
ADDED DWG.

118A AMPLIFIER
SERVICE SCHEMATIC

SCALE

JAC JUN

BELL TELEPHONE LABORATORIES, INC. NEW YORK

ESR

ESR-614606

5030.56

118A Amplifier

ALTEC SERVICE CORPORATION

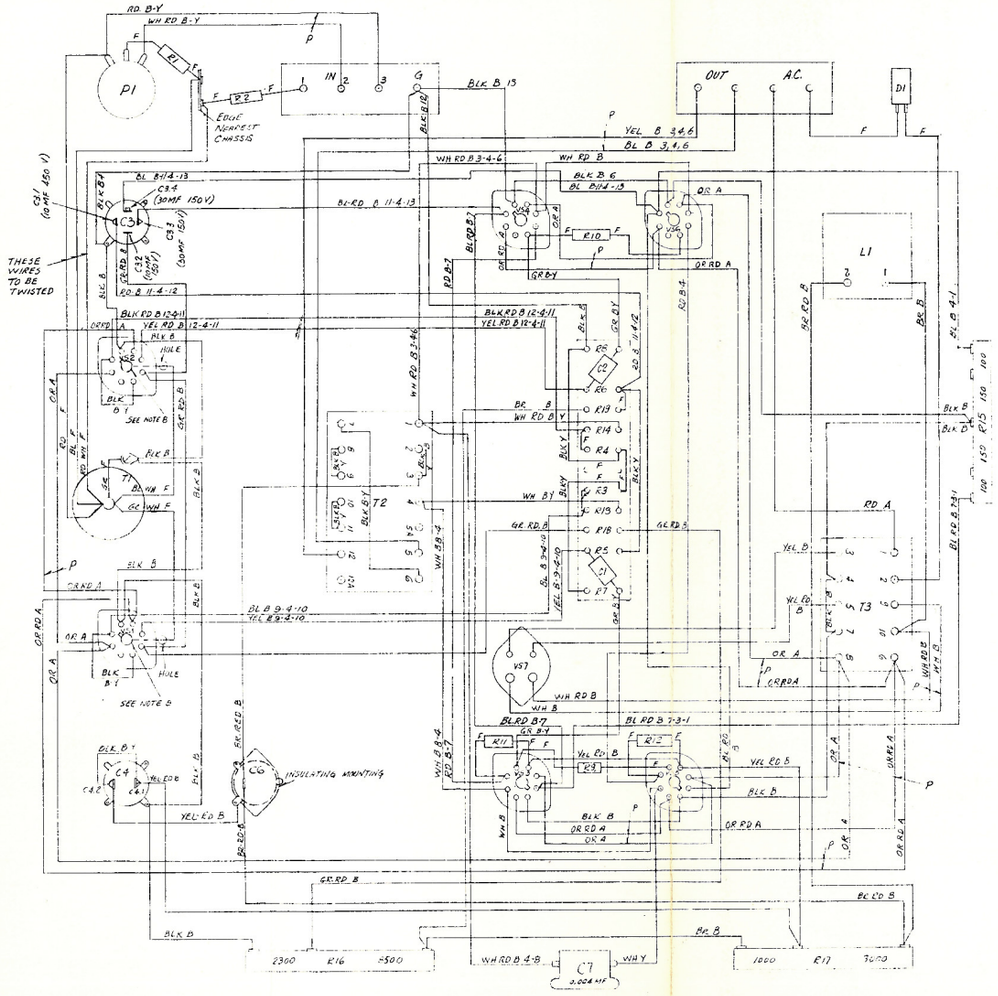

NOTES:

1. WIRES MARKED "A" ARE 18AWGA PER KS-7612 SOLID WIRE.
2. WIRES MARKED "B" ARE 22AWGA PER KS7612 SOLID WIRE
3. WIRES MARKED "P" DENOTE TWISTED PAIR
4. WIRES MARKED "F" ARE FURNISHED AS PART OF APPARATUS.
5. APPARATUS DESIGNATIONS ARE FOR REFERENCE ONLY AND SHALL NOT APPEAR ON APPARATUS.
6. ALL WIRES ARE IN THE CABLE EXCEPT THOSE MARKED Y OR F.
7. NUMBERS FOLLOWING WIRE DESIGNATIONS REFER TO CABLE PATH ON ASSEMBLY DRAWING ESR-613788 AND SHOULD BE RUN AS INDICATED. THE RUN OF WIRES NOT INDICATED BY NUMBERS IS OPTIONAL.
8. GRID CLIP (TEMIC, ESR-613788) CLAMPED TO INSULATION AT ASSEMBLY SHALL BE SOLDERED TO LEAD.

118A AMPLIFIER

WIRING DIAGRAM

SCALE

BELL TELEPHONE LABORATORIES, INC. NEW YORK

ESR-613790

ESR-61

PA-2565

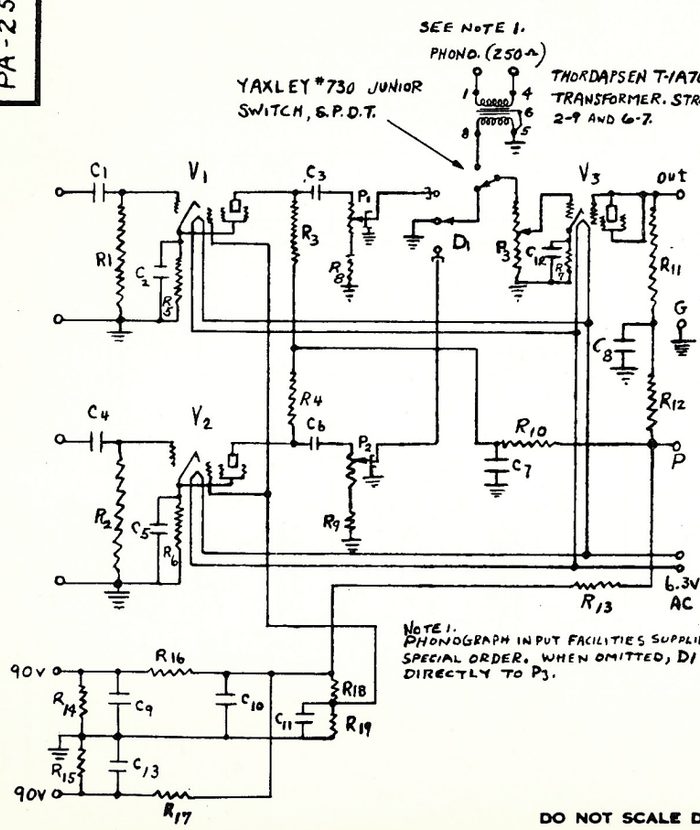

NOTE 1.
PHONOGRAPH INPUT FACILITIES SUPPLIED ONLY ON SPECIAL ORDER. WHEN OMITTED, D1 CONNECTS DIRECTLY TO P3.

DO NOT SCALE DRAWING

UNLESS OTHERWISE SPECIFIED ALL DIMENSIONS ± .005"

DESIGN NO.	Apparatus	Value
C1, C3	Condenser 600V	.05 mfd
C4, C6	" 600V.	.08 mfd
C2, C5	" 25V.	25 mfd
C12	" 25V	25 mfd
C7, C8	" 450V	8.0 mfd
C9, C13	" 450V	8-8 mfd
C10, C11	" 450V	8-8 mfd
D1	Switch I.R.C. AT-102	
P1, P2	Potentiometer 0.5 Meg	
P3	IRC VOL. CONT. POT. TYPE AT-101, 500,000 Ω	
R1 R2	Resistance 1 watt	100,000Ω
R3, R4	" "	100,000Ω
R5, R6, P1	" "	1,000Ω
R8, R9	" "	1.0 Meg
R10	" "	10000Ω
R12	" "	50,000Ω
R13	" "	10,000Ω
R11, R14, R15	" "	100,000Ω
R16, R17	" "	100000Ω
R18, R19	" "	50,000Ω
V1, V2, V3	6SJ7 Vac. Tube	

CHANGES

ISSUE NO. 1 10-28-40
NOTE 1 ADDED.
ISSUE 2 - 10-30-31
SHIELDING ON OUTPUT LEADS FROM P1 AND P2 ADDED
ISSUE 3 11-1-40
C2, C5, C12 WERE INCORRECTLY SHOWN AS .25 MFD. C9 DESIGN ADDED. DESIGN. ON C10, C11 WAS 8.0 MFD. P3 VALUE WAS NOT SHOWN R1, R2 WERE INCORRECTLY SHOWN AS .25 MEG, R10 AS 20,000Ω, AND R13 AS 50,000Ω. R8 ON DWG. WAS SHOWN AS R12 AND C10 AS C9.
ISSUE 4 11-12-40

TITLE
PA-7501 PREAMPLIFIER
SCHEMATIC

MATERIAL		FINISH	
DRAWN CTH	CHKD. RW	APPVD. RW	DATE 12/28/40

DRWG. NO. PA-2565

MOTIOGRAPH INC.
CHICAGO, ILL.

PA-7501 Amplifier

ALTEC SERVICE CORPORATION

PA-7501 Amplifier

5031.11

Printed in U.S.A.

AMA-2512

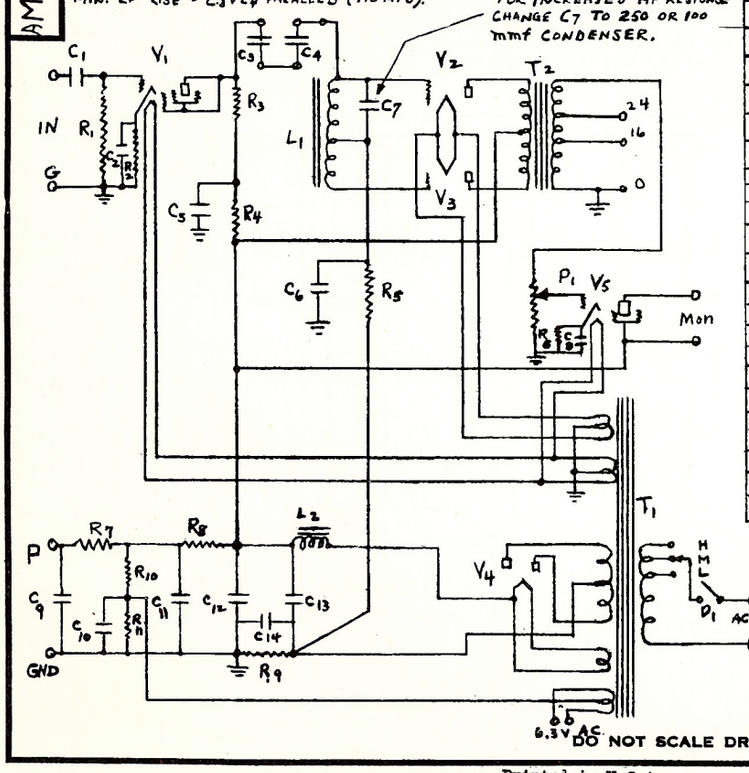

UNLESS OTHERWISE SPECIFIED ALL DIMENSIONS ± .005"

Design	Apparatus	Value
$C_1 C_3 C_4$	Condenser 600v.	.05 mf
$C_2 C_8 C_{10}$	" 25v	25 mf
$C_5 C_6$	" 450v	8.0 mf
$C_9 C_{14}$	" 450v	8.0 mf
C_7	"	500 mmf
$C_{11} C_{12} C_{13}$	" 450v	12.0 mf
D_1	Switch S.P.S.T. Toggle	
L_1	Choke Coil XB 604A	
L_2	" " 3212 E	
P_1	Potentiometer, IRC 500,000 Ω	
R_1	Resistance 1watt	1 meg.
R_3	Resistance 1watt	100,000Ω
$R_2 R_{11}$	" "	1,000Ω
$R_4 R_5$	" "	50,000Ω
R_6	PARALLELED " "	1,000Ω / 1,000Ω
R_7	PARALLELED " "	10,000Ω / 10,000Ω
R_8	" 10 WATT	1,500Ω
R_9	" 25 watt	300Ω
R_{10}	" 10 WATT	20,000Ω
T_1	Power Trans. XB558A	
T_2	Output Trans. XB564	
V_1	6SJ7 Vac. Tube	
V_2 V_3	2A3 " "	
V_4	5U4G " "	
V_5	6K6G " "	

CHANGES

ISSUE NO. 1 10/28/40

C_2, C_8, C_{10} WERE INCORRECTLY SHOWN AS .25 MF, AND R_1 AS 100,000Ω. NOTE ON HF RESPONSE ADDED.

ISSUE 2 12-14-40

DO NOT SCALE DRAWING

TITLE
MA-7502 AMPLIFIER SCHEMATIC

MATERIAL	FINISH		
DRAWN CTH	CHKD.	APPVD.	DATE 10/28/40

DRWG. NO AMA-2512

MOTIOGRAPH INC.
CHICAGO, ILL.

Printed in U.S.A.

5031.12 MA-7502 Amplifier ALTEC SERVICE CORPORATION MA-7502 Amplifier

1. DESCRIPTION - Open front chassis, all AC operated; separate chassis (PA-7505) for two stage pre-amplifier having individual input stages for two sound reproducer outputs, and changeover and volume control facilities; two stage main amplifier (MA-7505) containing phase inverter, push-pull output, plate supply rectifier, and monitor amplifier tube.

2. MOUNTING

2.1 For M-9 System (single amplifier cabinet) - MA-7015 Cabinet and External Controls.

2.2 For M-9A System (separate cabinets)
- PA-7015 Cabinet (for PA-7505)
- PA-7016 Extension Controls (for PA-7505)
- MA-7017 Cabinet (for MA-7505)

2.3 For M-9 Dual System
- PA-7015 Cabinet (for PA-7505)
- PA-7016 Extension Controls (for PA-7505)
- MA-7017 Cabinets (2) (for MA-7505)
- SE-7512 Amplifier Switching Panel

Note: When present stocks of MA-7015 and MA-7017 Cabinets are exhausted, the M-9 System will be discontinued and the MA-7000 Cabinet will replace the MA-7017 Cabinet in the M-9A and M-9 Dual Systems.

3. CHARACTERISTICS

Gain - 95 db. (maximum)
Volume Control - 38db. (19 - 2db. steps and OFF), in PA-7505 Amplifier
Impedence - Input - (PA-7505) High; works from 2 megohm load resistance in SH-7500 Reproducer
Output - (MA-7505) 16 or 32 ohms
Power Output - 18 watts, 34.8 db/.006W
Noise Level -17 db/.006W
Vacuum Tubes -

PA-7505 Preamplifier	MA-7505 Amplifier
2 - 6SF5	1 - 6N7G
1 - 6J5 or 6J5G	2 - 6L6G
	1 - 5Z3
	1 - 6K6G

Power Supply Required - 105-125 volts, 50-60 cycles, 125 watts
Power Supply Furnished - MA-7505 Amplifier furnishes heater supply of 6.3 volts AC at 0.9 amperes and 200 volts, rectified and filtered plate supply at 4.0 ma to PA-7505 Amplifier. PA-7505 Amplifier furnishes two photocell polarizing supplies of 90 volts DC, at approximately 10 microamperes.
Fusing - External fuses in power supply circuit to MA-7505 Amplifier should not exceed 3 amperes.
Equalization - Shunt condensers in MA-7505 Amplifier. Refer to circuit diagrams and system installation notes.
Dimensions - PA-7505 Amplifier - 8-3/4" H. x 9" W. x 5-1/4" D.
MA-7505 Amplifier - 12-1/2" H. x 16-1/2" W. x 7-1/2" D.
Weight - PA-7505 Amplifier 3 lbs.
MA-7505 Amplifier 30 lbs.

4. TESTING PROCEDURE - Average Tube Socket Voltages and Currents, using 20,000 ohm/volt meter. DC voltages measured to cathode, except as noted.

PA-7505 Amplifier			MA-7505 Amplifier		
6SF5 Input Tubes,	E_p	145V (250V scale)	6N7G Phase Inv. Tube,	E_p	100V (250V scale)
	E_g	1.3V (10V scale)		E_g	1.7V pin 4 (10V scale)
6J5G Output Tube,	E_p	105V (250V scale)			0.6V " 5 " "
	E_g	4.0V (10V scale)	6L6G Output Tubes,	E_p	380V (1000V scale)
				E_s	300V (1000V scale)
				E_g	18.5V (50V scale)
			5Z3 Rectifier Tube,	E_p	520V (1000VAC scale, plate to ground)
				E output	420V (1000VDC scale, fil. to ground)
			6K6G Monitor Tube,	E_p	290V (1000V scale)
				E_s	300V (1000V scale)
				E_g	21V (50V scale, Mon. Vol. Contr. OFF)

ASSOCIATED DRAWINGS

APA-2566	PA-7505 Amplifier, Schematic Diagram
APA-2567	PA-7505 Amplifier, Wiring Diagram
AMA-2513	MA-7505 Amplifier, Schematic Diagram
LMA-2514	MA-7505 Amplifier, Wiring Diagram

Issued by
Engineering Department
Printed in U. S. A.

APA-2566

UNLESS OTHERWISE SPECIFIED
ALL DIMENSIONS ± .005"

FOR MACHINE BALANCING, CONNECTION OF SHORTING STRAP AT "A" TO SUCCESSIVE RESISTOR JUNCTIONS FROM GROUND REDUCES CORRESPONDING CHANNEL'S OUTPUT IN STEPS OF APPROXIMATELY 1 DB.

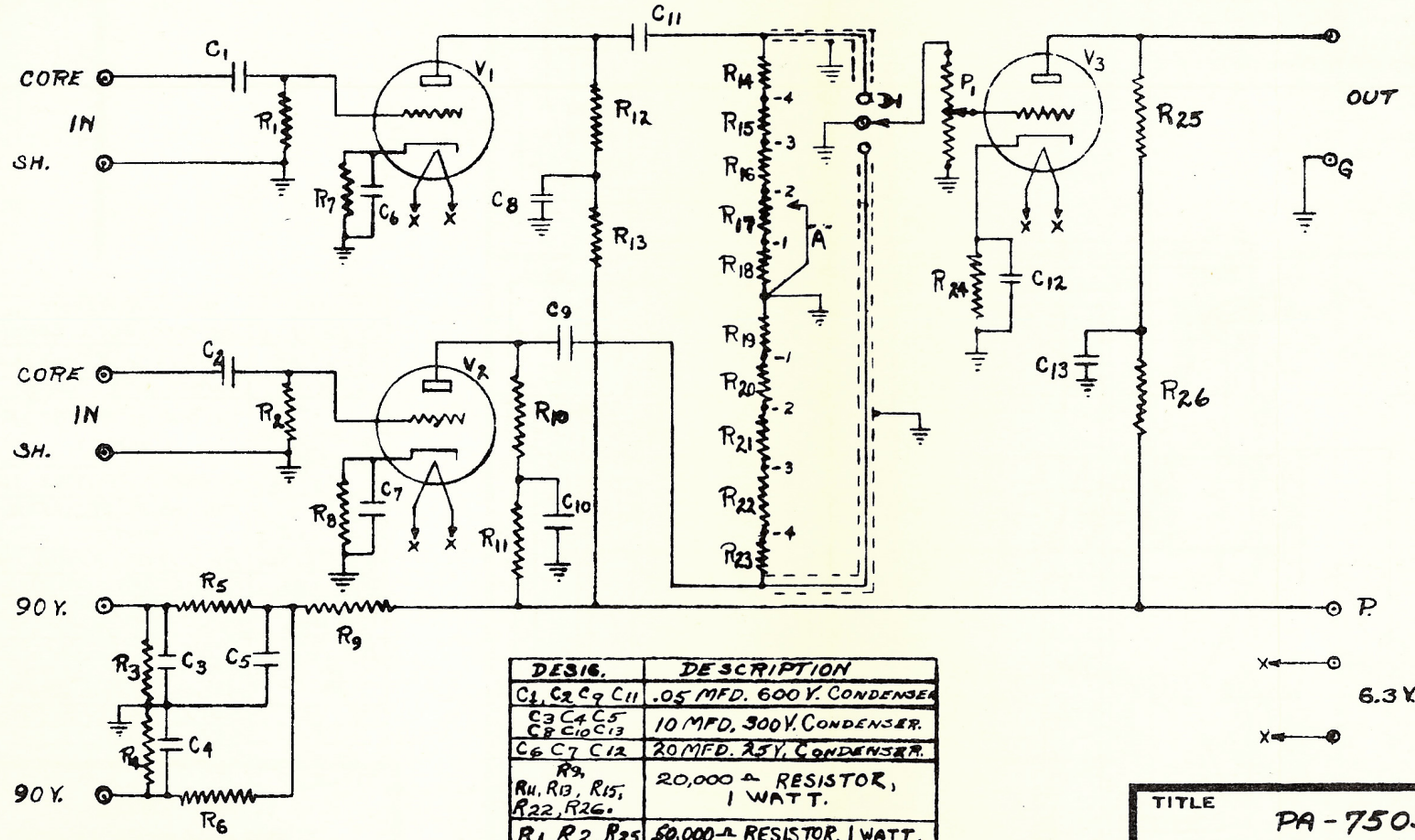

DESIG.	DESCRIPTION
C1, C2 C9 C11	.05 MFD. 600 V. CONDENSER
C3 C4 C5 C8 C10 C13	10 MFD. 300 V. CONDENSER.
C6 C7 C12	20 MFD. 25 V. CONDENSER.
R9, R11, R13, R15, R22, R26.	20,000 Ω RESISTOR, 1 WATT.
R1, R2, R25	50,000 Ω RESISTOR, 1 WATT.
R3, R4, R5 R6, R10, R12	100,000 Ω RESISTOR, 1 WATT
R7, R8, R24	RESISTOR - 3500 Ω, 1 WATT
R14, R23	RESISTOR - 60 M. Ω, "
R16, R21	RESISTOR - 30 M Ω, "
R17, R20	RESISTOR - 75 M Ω, "
R18, R19	RESISTOR - 250 M Ω, "
D1	I.R.C. AT-102 SWITCH
P1	I.R.C. AT-101 POT. 500 M Ω
V1, V2	6SF5 VACUUM TUBES
V3	6V5 " "

CHANGES

ISSUE NO. 1 2-10-41
R-26 WAS SHOWN AS R-27. R-25 WAS 100 M Ω. A RESISTOR (R-26, 100 MΩ) WAS SHOWN BETWEEN R-25 AND PRESENT R-26. A CONDENSER (C-14, .002 MFR.) WAS SHOWN IN UNGROUNDED "OUT" LEAD WHICH ALSO CONNECTED TO JUNCTION BETWEEN R-25 AND FORMER R-26. R-10 & R-12 WERE 100 M Ω.

ISSUE 2, 3-17-41 RTO
P1 & R2 WERE 20 M Ω
R10 & R12 WERE 50 M Ω
R14 & R23 WERE 50 M Ω
V3 WAS 6SF5 V. TUBE

ISSUE 3, 3-28-41 RTO

TITLE
PA-7505
PRE-AMPLIFIER
SCHEMATIC

MATERIAL	FINISH		
DRAWN Ramin	CHKD. RTO	APPVD. RTO	DATE 2-10-41

DRWG. NO. APA-2566

MOTIOGRAPH INC.
CHICAGO, ILL.

5031.62
PA-7505 PRE-AMPLIFIER

ALTEC SERVICE CORPORATION

APA-2567

FOR MACHINE BALANCING, CONNECTION OF SHORTING STRAP AT 'A' TO SUCCESSIVE RESISTOR JUNCTIONS FROM GROUND REDUCES CORRESPONDING CHANNEL'S OUTPUT IN STEPS OF APPROXIMATELY 1 DB.

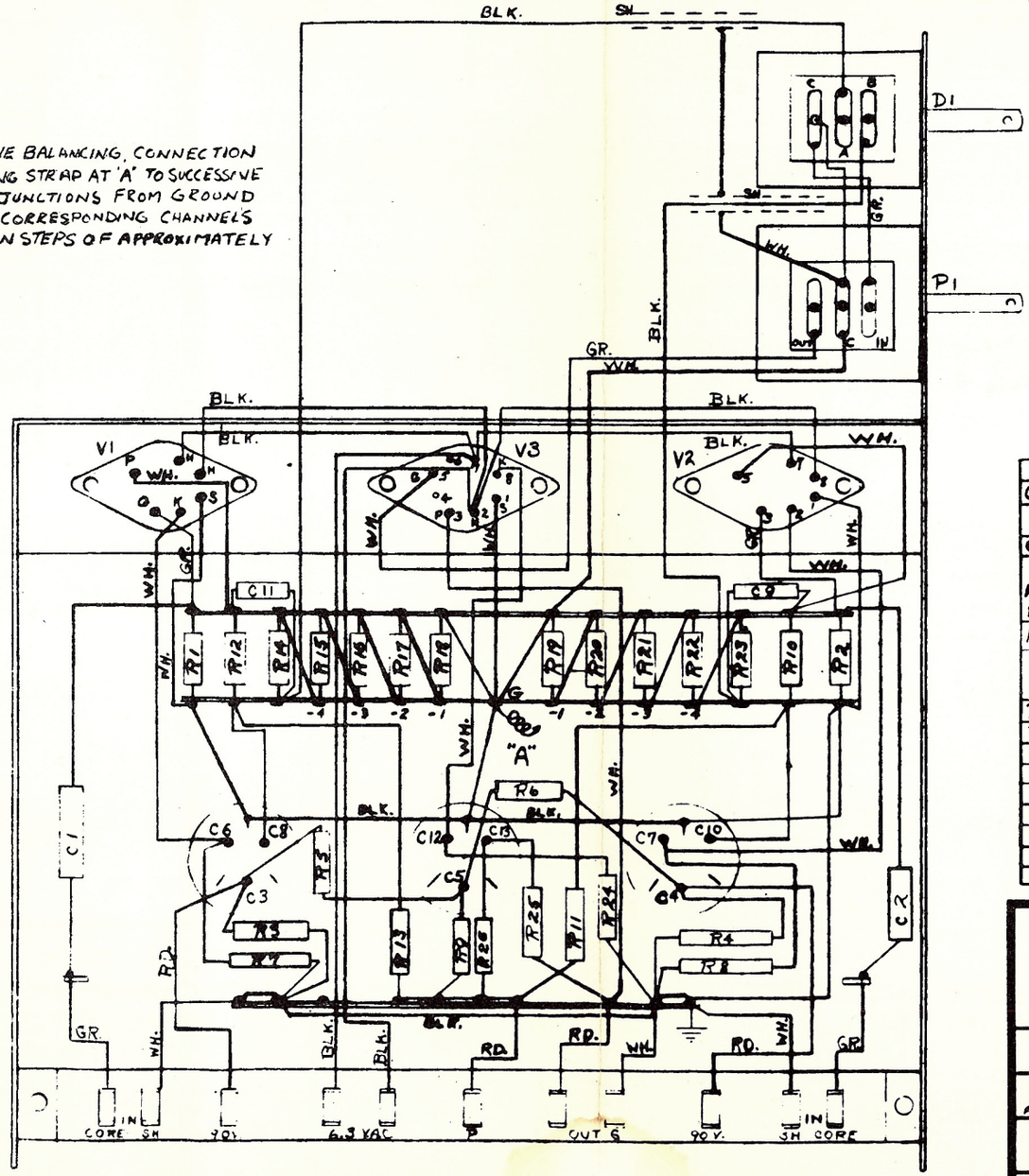

DO NOT SCALE DRAWING

CHANGES

ISSUE NO. 1 2-10-40 REVISED TO AGREE WITH ISSUE 2 OF SCHEMATIC. SEE APA-2566-2 FOR DETAILS.

ISSUE 2 3-18-41 RTV REVISED TO AGREE WITH ISSUE 3 OF SCHEMATIC AND WIRING PRODUCTION AMPLIFIER

ISSUE 3 3-28-41 RTV

DESIG.	DESCRIPTION
C1, C2, C9, C11	.05 MFD 600 V. CONDENSER
C3, C4, C5 C8, C10, C13	10 MFD. 300 V. CONDENSER
C6, C7, C12	20 MFD. 25 V. CONDENSER
P9, R11, R13, R15, R22, R26.	20,000 Ω RESISTOR 1 WATT.
P1, P2, R25	50,000 Ω RESISTOR, 1 WATT.
R3, R4, R5, R6, R10, R12	100,000 Ω RESISTOR 1 WATT
R7, R8, R24	RESISTOR- 3500 Ω, 1 WATT
R14, R23	RESISTOR- 5 OM. Ω, "
R16, R21	RESISTOR- 30 M Ω, "
R17, R20	RESISTOR- 75 M Ω, "
R18, R19	RESISTOR- 250 M Ω, "
D1	I.R.C. AT-102 SWITCH.
P1	I.R.C. AT-101 POT. 500 M Ω
V1, V2	6SF5 VACUUM TUBES
V3	6J5 " "

TITLE

PA-7505
PRE-AMPLIFIER
WIRING DIAGRAM

MATERIAL		FINISH	
DRAWN Ramin	CHKD. RTV	APP'VD. RTV	DATE 2-10-40

DRWG. NO. APA-2567

MOTIOGRAPH INC.
CHICAGO, ILL.

Printed U.S.A.

AMA-2513

UNLESS OTHERWISE SPECIFIED
ALL DIMENSIONS ± .005"

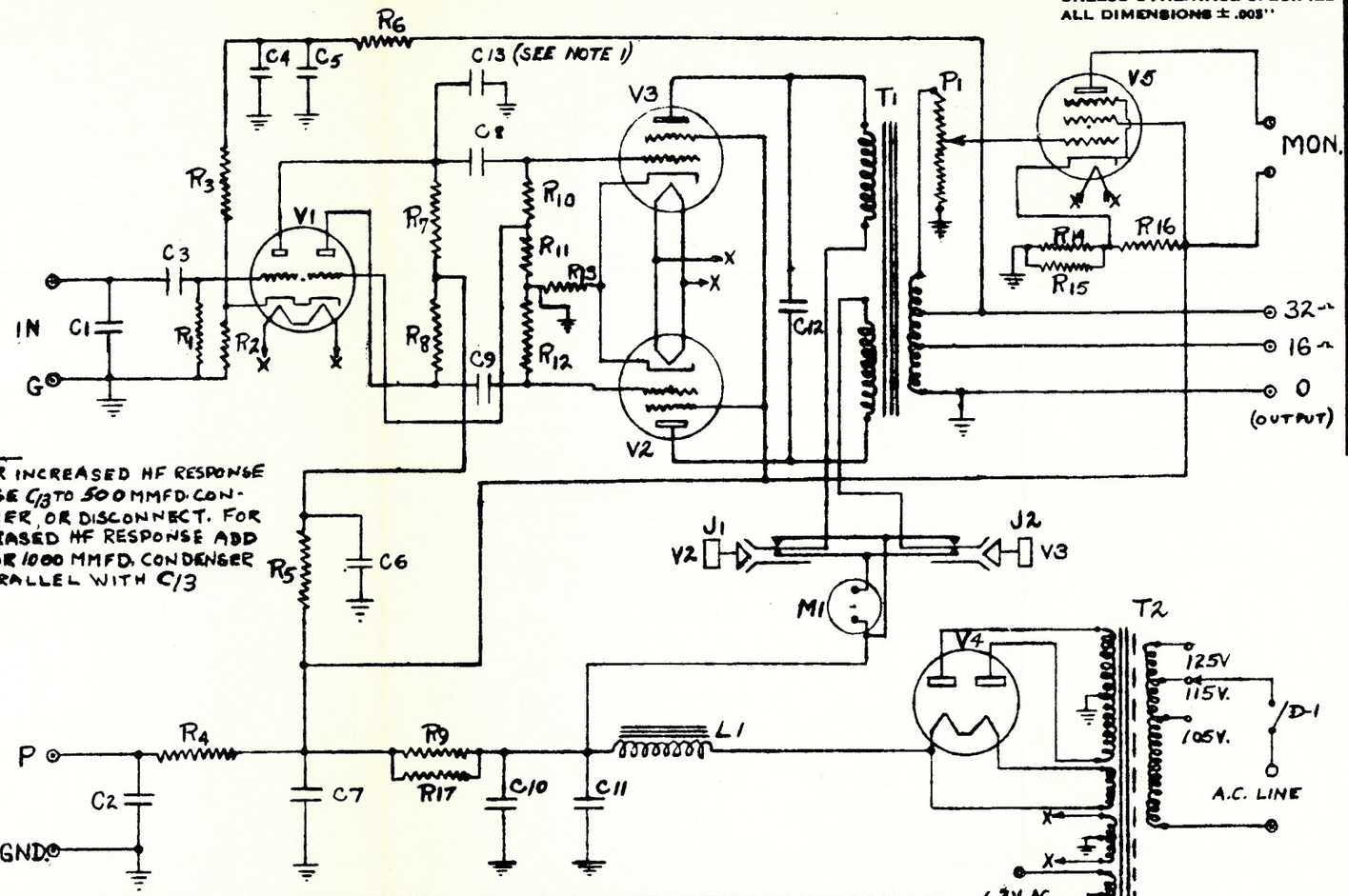

NOTES:
1. FOR INCREASED HF RESPONSE CHANGE C13 TO 500 MMFD. CONDENSER, OR DISCONNECT. FOR DECREASED HF RESPONSE ADD 500 OR 1000 MMFD. CONDENSER IN PARALLEL WITH C13

LMA-2514 - WIRING DIAGRAM

DESIG.	DESCRIPTION
C1	500 MMFD. CONDENSER.
C2, C6, C7 C10, C11	15 MFD. 450 V. CONDENSER.
C3, C8, C9	.05 MFD. 600 V. CONDENSER.
C4, C5	.3 MFD. 600 V. CONDENSER.
C12	.005 MFD. 1000 V. CONDENSER.
D1	H. & H. 3A. 125 V. S.P.S.T. TOGGLE SWITCH
L1	T-2760 CHOKE
R1	RESISTOR - 2 MEG Ω 1 WATT
R2	RESISTOR - 500 Ω 1 WATT
R3	RESISTOR - 20,000 Ω 1 WATT
R6, R11	RESISTOR - 10,000 Ω 1 WATT
R4, R5	RESISTOR - 30000 Ω 1 WATT
R7, R8	RESISTOR - 50,000 Ω 1 WATT
R14, R15	RESISTOR - 1000 Ω 1 WATT
C13	.001 MFD. CONDENSER

DESIG.	DESCRIPTION
R9, R17	RESISTOR 3000 Ω 5 WATT
R10, R12	RESISTOR 250,000 Ω 1 WATT
R13	RESISTOR 175 Ω 5 WATT
R16	RESISTOR 75,000 Ω 1 WATT
V1	6N7G VACUUM TUBE.
V2, V3	6L6G VACUUM TUBE.
V4	523 VACUUM TUBE.
V5	6K6G VACUUM TUBE.
J1	CARTER #433 S.P.D.T. P.B. SWITCH
J2	" " " " "
M1	MARION MODEL 52-S 0-150 MILLIAMMETER
T1	T-2729 OUTPUT TRANS.
T2	P-1626 POWER TRANS.
P1	1 MEG. VOL. CONT. POT.

DO NOT SCALE DRAWING

CHANGES

ISSUE NO. 1 2-10-41 RM AND R15 WERE 500 Ω BT-1 INCORR. R17 ADDED. R4 WAS 10 M Ω. R3 WAS 20 M Ω. BOTTOM OF R7 WAS CONNECTED TO TOP OF R8. "6.3 V. AC" ADDED. NOTE 1 ADDED.

ISSUE 2 3-18-41 RW C13 ADDED. NOTE 1 REFERRED TO C1 AND C VALUES WERE 250, 250, AND 500 MMF. R3 WAS 7500 Ω R13 WAS 200 Ω C12 WAS 600 V. T1 WAS T-2759

ISSUE 3, 3-28-41 RC

TITLE
MA-7505 AMPLIFIER SCHEMATIC

MATERIAL | FINISH

DRAWN CHKD. RTV APPVD. RTV DATE 2-10-41

DRWG. NO. AMA-2513

MOTIOGRAPH INC.
CHICAGO, ILL.

5031.64

ALTEC SERVICE CORPORATION

MA-7505 AMPLIFIER

LMA-2514

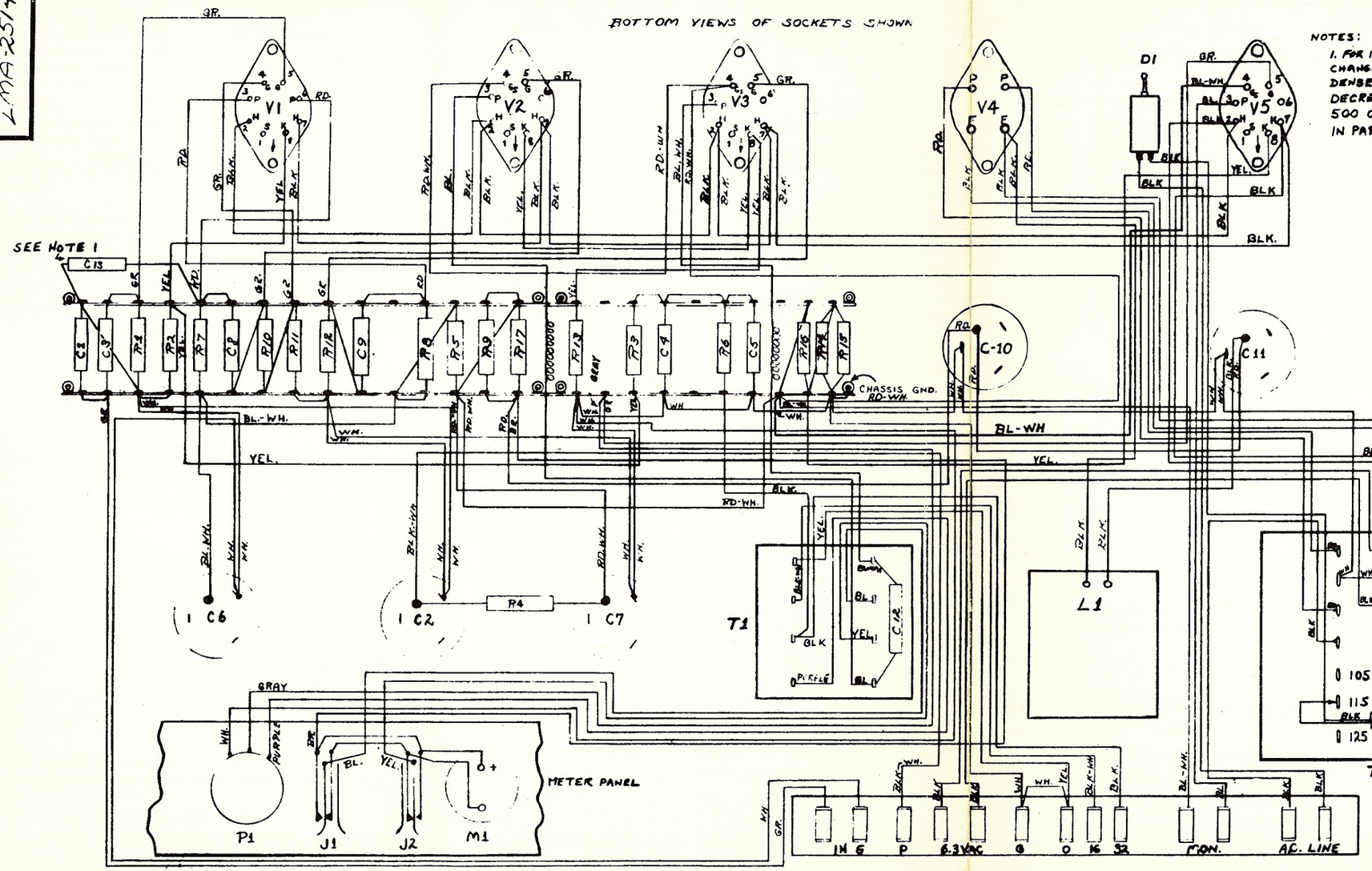

NOTES:

1. FOR INCREASED HF RESPONSE CHANGE C13 TO 500 MMFD. CONDENSER, OR DISCONNECT. FOR DECREASED HF RESPONSE ADD 500 OR 1000 MMFD. CONDENSER IN PARALLEL WITH C13.

CHANGES

ISSUE NO. 1 2-10-41 REDRAWN FROM ISSUE 1 DUE TO EXTENSIVE CHANGE IN WIRING LAYOUT, AND TO AGREE WITH SCHEMATIC FOR DETAILS REFER TO AMA-2513-2.

ISSUE 2 3-18-41 RTV REVISED TO AGREE WITH ISSUE 3 OF SCHEMATIC AND WITH PRODUCTION AMPLIFIERS.

ISSUE 3, 3-28-41 RTV

DESIG	DESCRIPTION
C1	500 MMFD. CONDENSER
C2, C6, C7 C10, C11	15 MFD 450V. CONDENSER.
C3, C8, C9	.05 MFD. 600V CONDENSER.
C4, C5	.3 MFD. 600V. CONDENSER.
C12	.005 MFD. 1000V. CONDENSER.
D1	H. & H. 3A 125V. S.P.S.T. TOGGLE SWITCH.
L1	T-2760 CHOKE
R1	RESISTOR - 2 MEG. Ω 1 WATT.
R2	RESISTOR - 500 Ω 1 "
C13	.001 MFD. CONDENSER

DESIG.	DESCRIPTION
R14, R15	RESISTOR - 1000 Ω 1 WATT
R3	RESISTOR - 20,000 Ω 1 "
R6, R11	RESISTOR - 10,000 Ω 1 "
R4, R5	RESISTOR - 30,000 Ω 1 "
R7, R8	RESISTOR - 50,000 Ω 1 "
R9, R17	RESISTOR - 3000 Ω 5 WATTS
R10, R12	RESISTOR - 250,000 Ω 1 WATT
R13	RESISTOR - 175 Ω 5 WATTS.
R16	RESISTOR - 75,000 Ω 1 WATT.
P1	1 MEG VOL. CONT. POTENTIOMETER

DESIG.	DESCRIPTION
V1	6N7G VACUUM TUBE.
V2, V3	6L6G " "
V4	5Z3 " "
V5	6K6G " "
J1	CARTER #433 S.P.D.T. P.B. SWITCH
J2	" " " " "
M1	MARION MODEL 52-S, 0-150 MILLIAMMETER
T1	T-2729 OUTPUT TRANS.
T2	P-1826 POWER TRANS.

DO NOT SCALE DRAWING

AMA-2513 - SCHEMATIC

TITLE
MA-7505 AMPLIFIER
WIRING DIAGRAM

MATERIAL _____ FINISH _____

DRAWN	CHKD.	APPVD.	DATE
[illegible]	RTV	RTV	3-18-41

DRWG. NO. LMA-2514

MOTIOGRAPH INC.
CHICAGO, ILL.

Printed in U. S. A.

1. DESCRIPTION

1.1 The PA-7505-A Amplifier is a chassis-type preamplifier. Individual input stages for two reproducers are provided, and these work into a common output stage through a commutator type changeover switch and master volume control potentiometer.

1.2 The MA-7505-A Amplifier is a chassis-type unit intended for use as an output or intermediate power amplifier.

2. MOUNTING

2.1 The PA-7505-A chassis is designed to be mounted in the associated cabinet on one side; tubes and auxiliary balancing controls occupy the opposite, or upper side, and the conventional "bottom" of the chassis faces outward so that all components are easily accessible for tests or servicing. The changeover switch and main volume control are mounted on an upright bracket at one corner of the chassis with shafts horizontal so they may be controlled from either projector operating position by means of extension control shafts.

2.2 The MA-7505-A chassis is mounted on one side in the associated cabinet, with tubes occupying the opposite, or upper side. Likewise, the conventional chassis "bottom" faces outward, but in the MA-7505-A Amplifier it is provided with a hinged metal cover plate which thus serves as a front panel, and carries the monitor volume control and the plate current meter and switches.

3. CHARACTERISTICS

3.1 PA-7505-A Amplifier

Volume Control- Continuously variable plate circuit potentiometers (range - 8 db) for balancing input stages. Main volume control - 38 db (19 - 2 db steps and OFF).
Impedance- Input - Actual - 110,000 ohms. (Works from SH-7500 Reproducer).
Output - Actual - 17,000 ohms. (Works into MA-7505-A Amplifier).
Power Supply Required- 6.3 VAC., 0.9 amperes, 200 VDC., 0.005 amperes. (from MA-7505-A Ampl.)
Power Supply Furnished- 90 VDC., 10 micro-amperes. (to two P.E.C. circuits)
Dimensions- 9" W. x 9" H. x 6-3/4" D.
Weight- 5-1/4 lbs. (without tubes)

3.2 MA-7505-A Amplifier

Volume Control- Multi-unit grid resistance and movable grid lead in input stage. Range - 6 db. (3 - 2 db steps)
Impedance- Input - Actual - 70,000 ohms. (Works from PA-7505-A Amplifier).
Output - Nominal - 16 or 32 ohms.
Power Output- 20 watts (35.2 db/.006W.), 2% total distortion, 50-5000 cps.
Power Supply Required- 105-125 volts, 60 cycles, 150 watts.
Fuse Required- 2 ampere, 4 AG (1-1/4" x 9/32"), Glass Tubular. Motiograph Part #MA-2681.
Power Supply Furnished- 6.3 VAC., 0.9 amperes, 200 VDC., 0.005 amperes.
Dimensions- 17" W. x 8" H. x 7" D. (without tubes)
Weight- 28 lbs. (without tubes)

3.3 Combined PA and MA-7505-A Amplifiers mounted in their cabinets and connected with 20' of cable.

Total Gain- 98 db. (Measured with PA-7505-A Amplifier input terminals terminated with a 1 megohm resistor in series with a 100 ohm resistor on the grounded side across which a signal voltage of 0.040 volts is applied.)
Noise Level- -45 db/.006W (PA-7505-A Amplifier changeover switch in OFF position and volume control at 0.)
-35 db/.006W (Volume control on Step 10, open PA-7505-A Amplifier input terminals.)
Frequency Response- Refer to LSS-7540.

4. ACCESSORIES

4.1 PA-7505-A Amplifier- 1 - PA-7015 Cabinet
1 - PA-7016 Set, Extension Controls

4.2 MA-7505-A Amplifier- 1 - MA-7000 Cabinet
1 - MA-7018 Set, Mounting Angles (for rack mounting)

5. OPERATION

5.1 The milliammeter on the meter panel of the MA-7505-A Amplifier indicates the plate current in the push-pull output stage. The meter normally indicates the sum of the plate currents of the two tubes comprising this stage. When D-2 push button is operated, the indication is of V-3 alone. When D-3 button is operated, the indication is similarly that of V-4 alone. Total plate current should be between 150 and 160 milliamperes. Normal current for either tube alone should be 75 or 80 milliamperes. For best amplifier performance, plate currents should be balanced within 10 milliamperes.

Issued by
Engineering Department
Printed in U. S. A.

ASSOCIATED DRAWINGS

APA-2637	PA-7505-A Amplifier, Schematic
APA-2638	PA-7505-A Amplifier, Wiring Diagram
LMA-2650	MA-7505-A Amplifier, Schematic
LMA-2649	MA-7505-A Amplifier, Wiring Diagram
LSS-7540	7505-A Type Amplifiers, Equalization Curves

Issued by
Engineering Department
Printed in U. S. A.

USE OF METAL 6L6 TUBES IN MA-7505-A AMPLIFIERS

There have been several field reports recently of troubles experienced when attempts are made to use metal 6L6 tubes in MA-7505-A amplifiers and a few reports of similar difficulties with recently produced RCA 6L6G tubes and 16L4 tubes, which are specially selected 6L6 type. We have just completed an extensive investigation of this matter, aided by tube company engineers, and have worked out a very simple corrective procedure.

At the time of the development work on the 7505-A type amplifiers only 6L6GA tubes were available. The amplifiers are stable using these tubes. With the other types,however, the slightly different tube characteristics in combination with stray coupling in the amplifier wiring cause a tendency toward the production of parasitic oscillations in the amplifier output stage. These oscillations may be in, or well above the audible range, and they may be intermittent or continuous; a few cases have been observed where they appear only when the output stage is being driven to nearly full output by an audio signal. The observed effects may be steady howling, extreme audio distortion, heavy hum in the amplifier output, poor balance in the output stage plate currents, very short tube life, or any combination of these effects.

There are several different ways to correct this trouble. One, for example, is to install shields on certain of the wire leads along the top of the resistor and condenser mounting strips in the amplifier, thus reducing the stray coupling below the point where it is troublesome. For existing amplifiers, however, this procedure is difficult, messy, and expensive. The preferred way, and the one which we are adopting, consists of installing small fixed resistors in the 6L6 tube grid leads directly at the tube sockets as parasitic oscillation suppressors. This procedure is standard practice in the amplifier stages of many radio transmitters using beam power tubes under conditions similar to those encountered in our amplifiers. There are no effects whatever on the performance of the amplifiers other than the elimination of the tendency toward instability.

6L6 type tubes have an unused base pin position, #6. The suppressor resistors are installed very simply by unsoldering the green grid lead wires from VS3 and VS4 #5 socket grid terminals, bridging the resistors across terminals #5 and #6, and reconnecting the grid lead wires to the #6 instead of the #5 terminals, thus connecting the resistors in series with the grid leads. The resistors may be 1/4, 1/3, or 1/2 watt, 100 ohm units, either carbon or wire-wound.

As of this date, new MA-7505-A Amplifiers are being equipped with the suppressor resistors during manufacture, and the amplifier diagrams are being revised to call for them. For any existing Motiograph-Mirrophonic sound equipment installation using 7505-type amplifiers where trouble is being experienced Motiograph will supply upon request and without charge the required number of resistors. Two are required for each MA-7505-A Amplifier in the installation; order them as "MA-2688 Parasitic Suppressor Resistor" and give the name of the installation for which they are needed.

M O T I O G R A P H
Chicago, Illinois.

Issued by
Engineering Department
Printed in U. S. A.

SUGGESTED MODIFICATION OF MA-7505-A AMPLIFIERS TO ELIMINATE OSCILLATION

1. GENERAL

1.1 The modification outlined below which was suggested by one of our field inspectors and approved by Motiograph, Inc., is submitted for your use to eliminate oscillation in the MA-7505-A Amplifier.

2. PROCEDURE

2.1 The change involved consists of unsoldering the leads from the screen terminals of V3, taking them out of the cable form, running them straight across in the open and reconnecting. If possible these two leads should be kept at least 1/4" to 1/2" away from the chassis.

2.2 Motiograph advises that the screen circuits are now run in red-blue wire instead of red-white as called for on the wiring diagrams in order to distinguish the circuits from the red plate circuits. This change in color code will be corrected on the next printing of wiring diagram.

3. COMMENTS

3.1 Motiograph further advises that the wiring change as submitted by our inspector has been tried out many times and according to all reports, it helps in the majority of cases though not in all, particularly with the worst 6L6's. It has the virtue, however, of not adversely affecting the amplifier performance and this wiring change will be put into effect at once on new amplifier production.

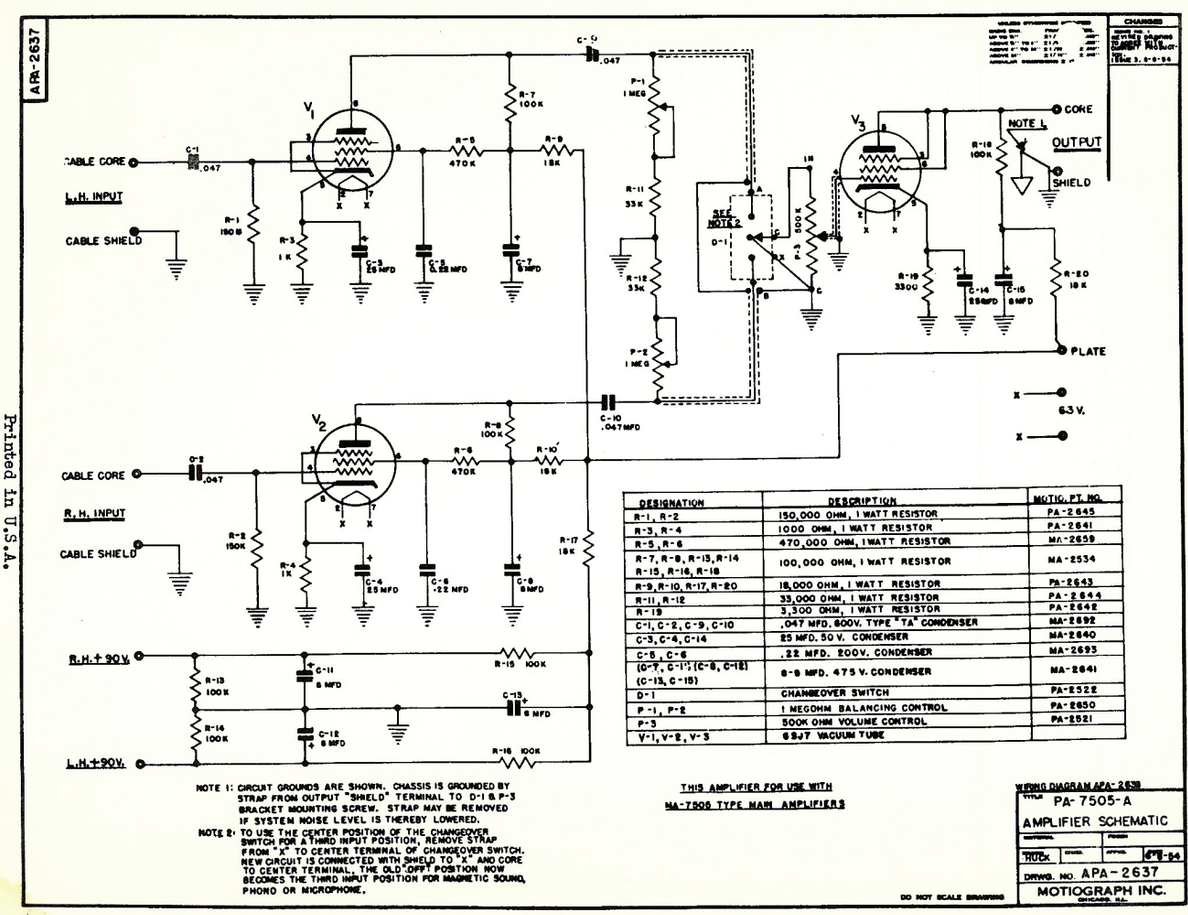

DESIGNATION	DESCRIPTION	MOTIO. PT. NO.
R-1, R-2	150,000 OHM, 1 WATT RESISTOR	PA-2645
R-3, R-4	1000 OHM, 1 WATT RESISTOR	PA-2641
R-5, R-6	470,000 OHM, 1 WATT RESISTOR	MA-2659
R-7, R-8, R-13, R-14 R-15, R-16, R-18	100,000 OHM, 1 WATT RESISTOR	MA-2534
R-9, R-10, R-17, R-20	18,000 OHM, 1 WATT RESISTOR	PA-2643
R-11, R-12	33,000 OHM, 1 WATT RESISTOR	PA-2644
R-19	3,300 OHM, 1 WATT RESISTOR	PA-2642
C-1, C-2, C-9, C-10	.047 MFD. 600V. TYPE "TA" CONDENSER	MA-2692
C-3, C-4, C-14	25 MFD. 50 V. CONDENSER	MA-2640
C-5, C-6	.22 MFD. 200V. CONDENSER	MA-2693
(C-7, C-11) (C-8, C-12) (C-13, C-15)	8-8 MFD. 475 V. CONDENSER	MA-2641
D-1	CHANGEOVER SWITCH	PA-2522
P-1, P-2	1 MEGOHM BALANCING CONTROL	PA-2650
P-3	500K OHM VOLUME CONTROL	PA-2521
V-1, V-2, V-3	6SJ7 VACUUM TUBE	

NOTE 1: CIRCUIT GROUNDS ARE SHOWN. CHASSIS IS GROUNDED BY STRAP FROM OUTPUT "SHIELD" TERMINAL TO D-1 & P-3 BRACKET MOUNTING SCREW. STRAP MAY BE REMOVED IF SYSTEM NOISE LEVEL IS THEREBY LOWERED.

NOTE 2: TO USE THE CENTER POSITION OF THE CHANGEOVER SWITCH FOR A THIRD INPUT POSITION, REMOVE STRAP FROM "X" TO CENTER TERMINAL OF CHANGEOVER SWITCH. NEW CIRCUIT IS CONNECTED WITH SHIELD TO "X" AND CORE TO CENTER TERMINAL. THE OLD "OFF" POSITION NOW BECOMES THE THIRD INPUT POSITION FOR MAGNETIC SOUND, PHONO OR MICROPHONE.

THIS AMPLIFIER FOR USE WITH MA-7506 TYPE MAIN AMPLIFIERS

DO NOT SCALE DRAWINGS

WIRING DIAGRAM APA-2638

TITLE PA-7505-A AMPLIFIER SCHEMATIC

DRWG. NO. APA-2637

MOTIOGRAPH INC. CHICAGO, ILL.

Printed in U.S.A.

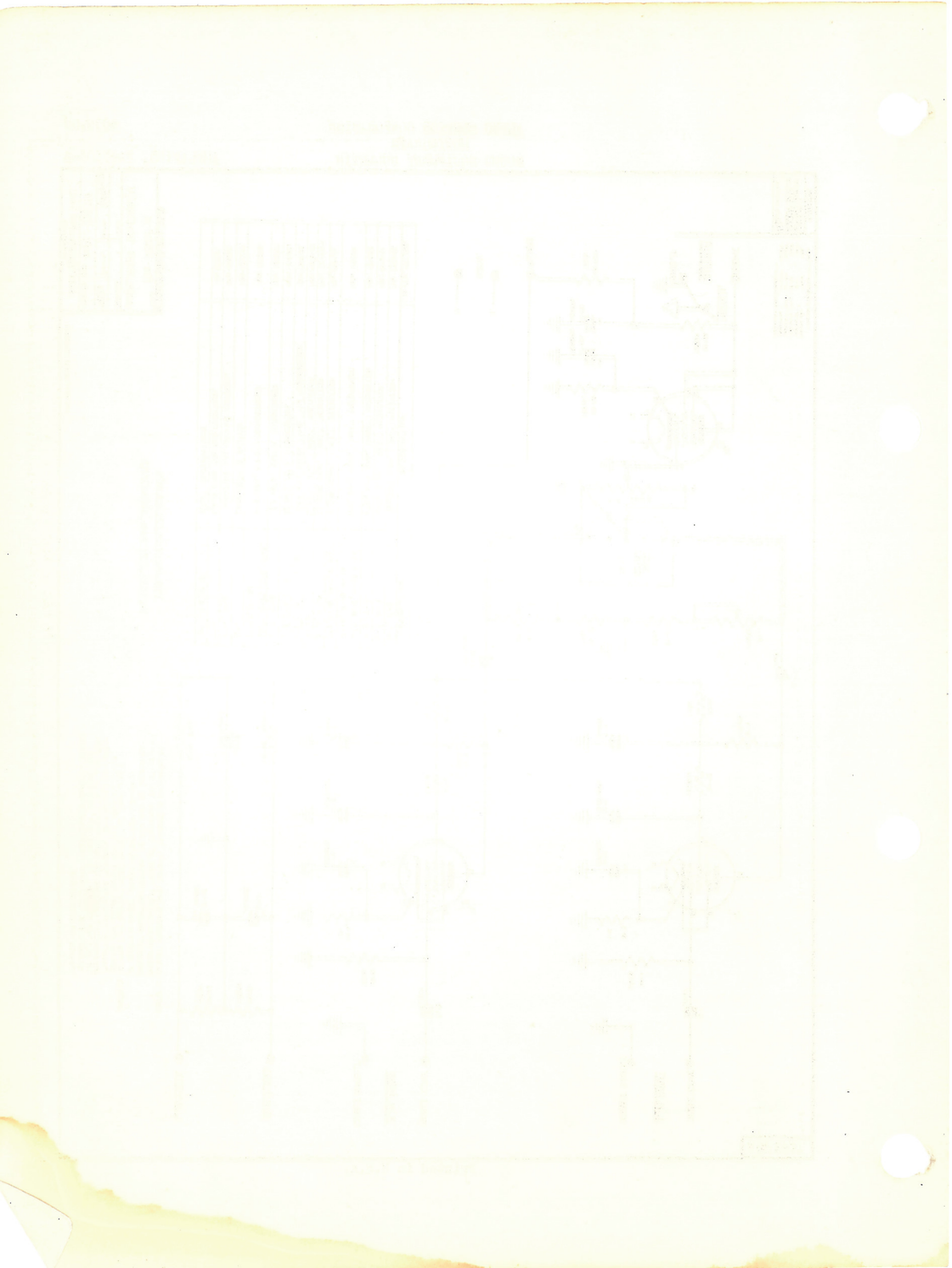

APA-2637

UNLESS OTHERWISE SPECIFIED
DECIMAL DIMENSIONS ± .005"
FRACTIONAL DIMENSIONS ± 1/64"
ANGULAR DIMENSIONS ± 1°

CHANGES
ISSUE NO. 1 8-15-44

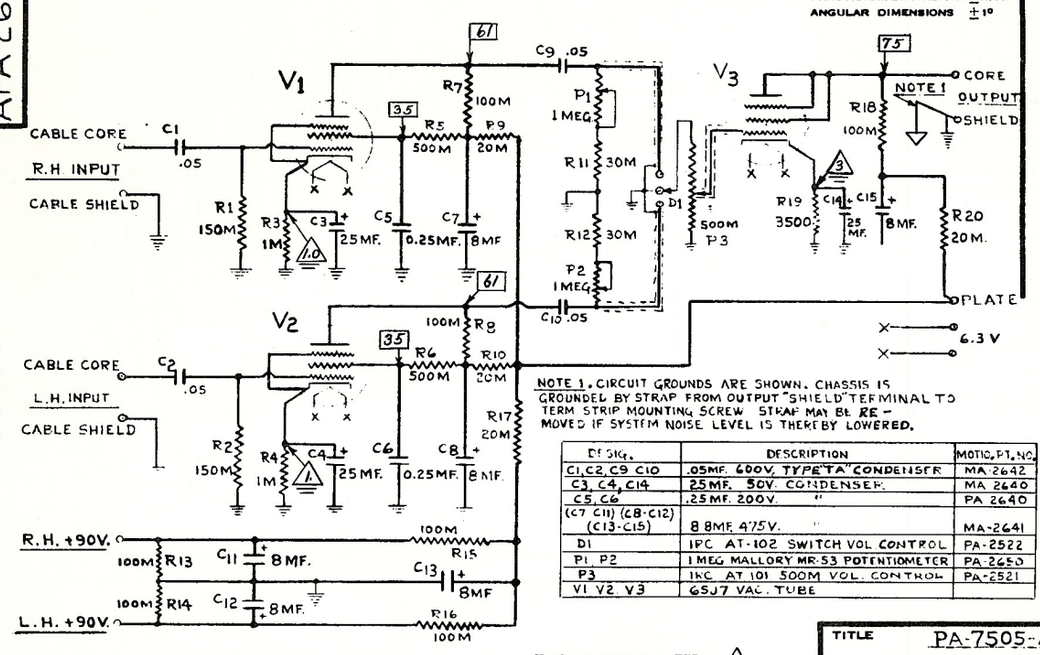

NOTE 1. CIRCUIT GROUNDS ARE SHOWN. CHASSIS IS GROUNDED BY STRAP FROM OUTPUT "SHIELD" TERMINAL TO TERM STRIP MOUNTING SCREW. STRAP MAY BE REMOVED IF SYSTEM NOISE LEVEL IS THEREBY LOWERED.

DESIG.	DESCRIPTION	MOTIO. PT. NO.
C1, C2, C9 C10	.05MF. 600V. TYPE "A" CONDENSER	MA-2642
C3, C4, C14	25MF. 50V. CONDENSER.	MA 2640
C5, C6	.25MF. 200V. "	PA 2640
(C7 C11) (C8-C12) (C13-C15)	8 8MF. 475V.	MA-2641
D1	IRC AT-102 SWITCH VOL CONTROL	PA-2522
P1 P2	1 MEG MALLORY MR-53 POTENTIOMETER	PA-2650
P3	1RC AT 101 500M VOL. CONTROL	PA-2521
V1 V2 V3	6SJ7 VAC. TUBE	

DESIG.	DESCRIPTION	MOTIO. PT. NO.
R1 R2	150 000 OHM ½ WATT RESISTOR	PA-2645
R3 R4	1,000 " " " "	PA-2641
R5 R6	500,000 " " " "	MA-2535
R7 R8 R13 R14 R15 R16 R18	100,000 " " " "	MA-2534
R9 R10 R17 R20	20,000 " " " "	PA-2643
R11 R12	30,000 " " " "	FA-2644
R19	3,500 " " " "	PA-2642

Numbers shown in □ or △ are nominal voltages to cathode (▭ or △ to ground), as read on TA-4147 meter. Volume controls at zero, changeover switch "OFF".
□ - 1000 V meter scale - ▭
△ - 25 V meter scale - △

DO NOT SCALE DRAWING

TITLE PA-7505-A AMPLIFIER SCHEMATIC

MATERIAL	FINISH
DRAWN H.M.C.	CHKD. RJ
APPVD. KTJ	DATE 8-15-44

DRWG. NO. APA-2637

MOTIOGRAPH CHICAGO, ILL.

Printed in U. S. A.

ALTEC SERVICE CORPORATION

PA-7505A Amplifier

5032.11

APA-2638

NOTE.
BLACK WIRING TO TUBE SOCKETS IS RUNZEL #26 GAUGE, CODE 415, 24 STRANDS #40 BARE COPPER BRAIDED, WAXED RAYON BRAID. LEADS TO D1 AND P3 ARE #22 STRANDED TINNED COPPER, TWO COTTON WAXED BRAID, INDIVIDUALLY SHIELDED WITH 1/8 COPPER BRAID AND CABLED IN #4 BLACK SATURATED SLEEVING. OTHER WIRING IS #22 SOLID TINNED COPPER, TWO COTTON WAXED BRAID.

UNLESS OTHERWISE SPECIFIED
DECIMAL DIMENSIONS ± .005"
FRACTIONAL DIMENSIONS ± 1/64"
ANGULAR DIMENSIONS ± 1°

CHANGES
ISSUE NO. 1 8-15-44

5032.12
PA-7505A Amplifier

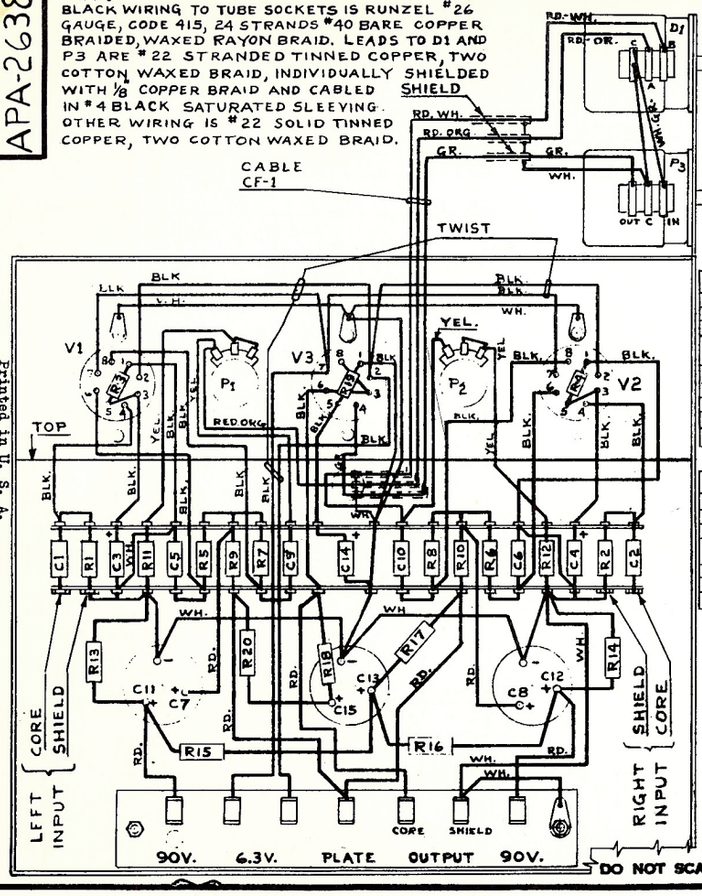

DESIG.	DESCRIPTION	MOTIO. PT. NO.
C1,C2,C9,C10	.05MF. 600V. TYPE "TA" CONDENSER	MA-2642
C3, C4, C14	25MF. 50V. "	MA 2640
C5, C6	.25MF. 200V. "	PA-2640
(C7-C11),(C8-C12) (C13-C15)	8-8MF. 475V. "	MA-2641
D1	IRC AT-102 SWITCH	PA-2522
P1, P2	1-MEG. MALLORY MR53 POTENTIOMETER	PA-2650
P3	IRC AT-101 500M.V.C. "	PA-2521
V1 V2 V3	6SJ7 VAC. TUBE	
CF-1	VOL. CONTROL CABLE FORM	PA-2652

DESIG.	DESCRIPTION	MOTIO. PT. NO.
P1, R2	150,000 OHM 1/2 WATT RESISTOR	PA-2645
R3, R4	1,000 " " " "	PA-2641
R5, R6	500,000 " " " "	MA-2535
R7, R8, R13, R14 R15, R16, R18	100,000 " " " "	MA-2534
R9, R10, R17, R20	20,000 " " " "	PA-2643
R11, R12	30,000 " " " "	PA-2644
R19	3,500 " " " "	PA-2642

TITLE
PA-7505-A
AMPLIFIER
WIRING DIAGRAM

MATERIAL ____ FINISH ____

DRAWN	CHKD.	APPVD.	DATE
H.M.C.	R.T.	[illegible]	8-15-44

DRWG. NO. APA-2638

MOTIOGRAPH
CHICAGO, ILL.

DO NOT SCALE DRAWING

Printed in U. S. A.

ALTEC SERVICE CORPORATION

LMA-2650

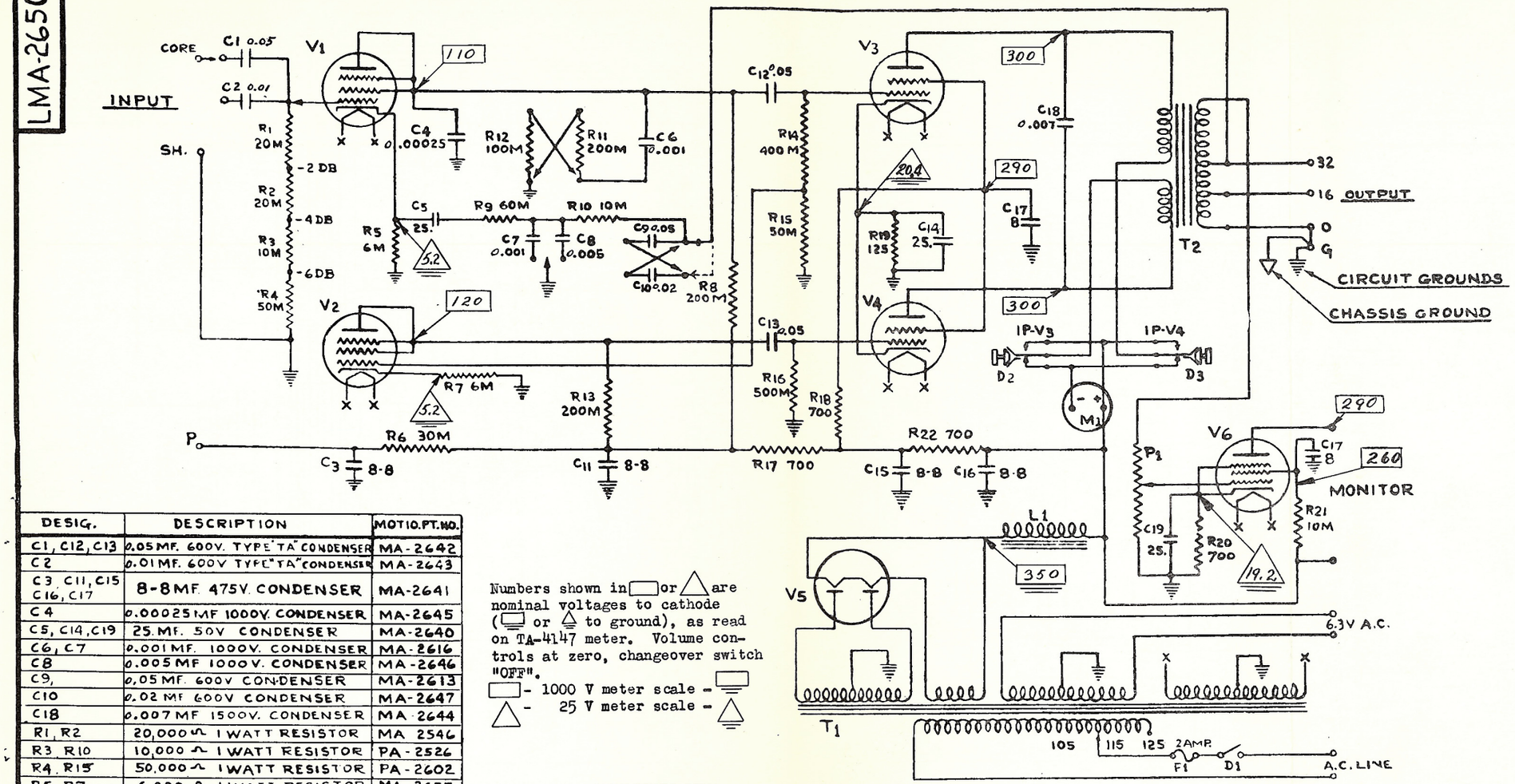

DESIG.	DESCRIPTION	MOTIO. PT. NO.
C1, C12, C13	0.05 MF. 600V. TYPE "TA" CONDENSER	MA-2642
C2	0.01 MF. 600V TYPE "TA" CONDENSER	MA-2643
C3, C11, C15 C16, C17	8-8 MF. 475V. CONDENSER	MA-2641
C4	0.00025 MF 1000V. CONDENSER	MA-2645
C5, C14, C19	25 MF. 50V CONDENSER	MA-2640
C6, C7	0.001 MF. 1000V. CONDENSER	MA-2616
C8	0.005 MF 1000V. CONDENSER	MA-2646
C9,	0.05 MF. 600V CONDENSER	MA-2613
C10	0.02 MF 600V CONDENSER	MA-2647
C18	0.007 MF 1500V. CONDENSER	MA-2644
R1, R2	20,000 Ω 1 WATT RESISTOR	MA 2546
R3, R10	10,000 Ω 1 WATT RESISTOR	PA-2526
R4, R15	50,000 Ω 1 WATT RESISTOR	PA-2602
R5, R7	6,000 Ω 1 WATT RESISTOR	MA-2655
R6	30,000 Ω 1 WATT RESISTOR	PA-2605
R8 R11, R13	200,000 Ω 1 WATT RESISTOR	MA-2657
R9	60,000 Ω 1 WATT RESISTOR	MA-2656
R12	100,000 Ω 1 WATT RESISTOR	MA-2542
R14	400,000 Ω 1 WATT RESISTOR	MA-2656
R16	500,000 Ω 1 WATT RESISTOR	MA-2659
R17 R18, R22	700 Ω 1 WATT RESISTOR	MA-2654
R19	125 Ω 20 WATT RESISTOR	MA-2651
R20	700 Ω 10 WATT RESISTOR	MA 2652
R21	10 000 Ω 10 WATT RESISTOR	MA 2653
D1	S.F.S.T. TOGGLE SWITCH	MA-2521
D2 D3	PUSH BUTTON SWITCH	MA-2605

Numbers shown in □ or △ are nominal voltages to cathode (⏚ or ⏚ to ground), as read on TA-4147 meter. Volume controls at zero, changeover switch "OFF".

□ - 1000 V meter scale - ⏚

△ - 25 V meter scale - ⏚

DESIG.	DESCRIPTION	MOTIO. PT. NO.
P1	POTENTIOMETER 200,000 Ω	MA 2525
M1	METER 0-200 MA.	MA 2636
T1	POWER TRANSFORMER T-47868	MA-7028
T2	OUTPUT TRANSFORMER T 47870	MA-2638
L1	CHOKE COIL T47869	MA-2639
V1, V2	6SJ7 VAC. TUBE	
V3 V4	6L6 G VAC. TUBE	
V5	5Z3 VAC. TUBE	
V6	6K6 VAC. TUBE	
F1	FUSE 2 AMP	MA-2681

NOTES

1. WIRES ENDING THUS → ARE TO BE CONNECTED IN FIELD AS REQUIRED. SEE INSTALLATION INSTRUCTIONS.

WIRING DIAGRAM DWG. LMA-2649

DO NOT SCALE DRAWING

CHANGES

ISSUE NO. 1 8-15-44 BOTH SECTIONS OF OUT WERE OCCURRED BY-PASS FOR V-3 & V-4. NO SCREEN DRAWS WAS SHOWN ON V-6.

ISSUE 2 8-25-44 C1 WAS MA-2613 COND. C9 WAS MA-2642 COND.

ISSUE 3 9-12-44 T-1 WAS MA-2637 CHANGE MADE ON AMP'LS SER. "GJ" AND LATER

ISS: 3A 11-2-45 D.L.D.

TITLE MA-7505-A AMPLIFIER SCHEMATIC DIAGRAM

MATERIAL ____ FINISH ____

DRAWN H M C | CHKD. RN | APPVD. RN | DATE 8-15-44

DRWG. NO. LMA-2650

MOTIOGRAPH CHICAGO, ILL.

ALTEC SERVICE CORPORATION

LMA-2649

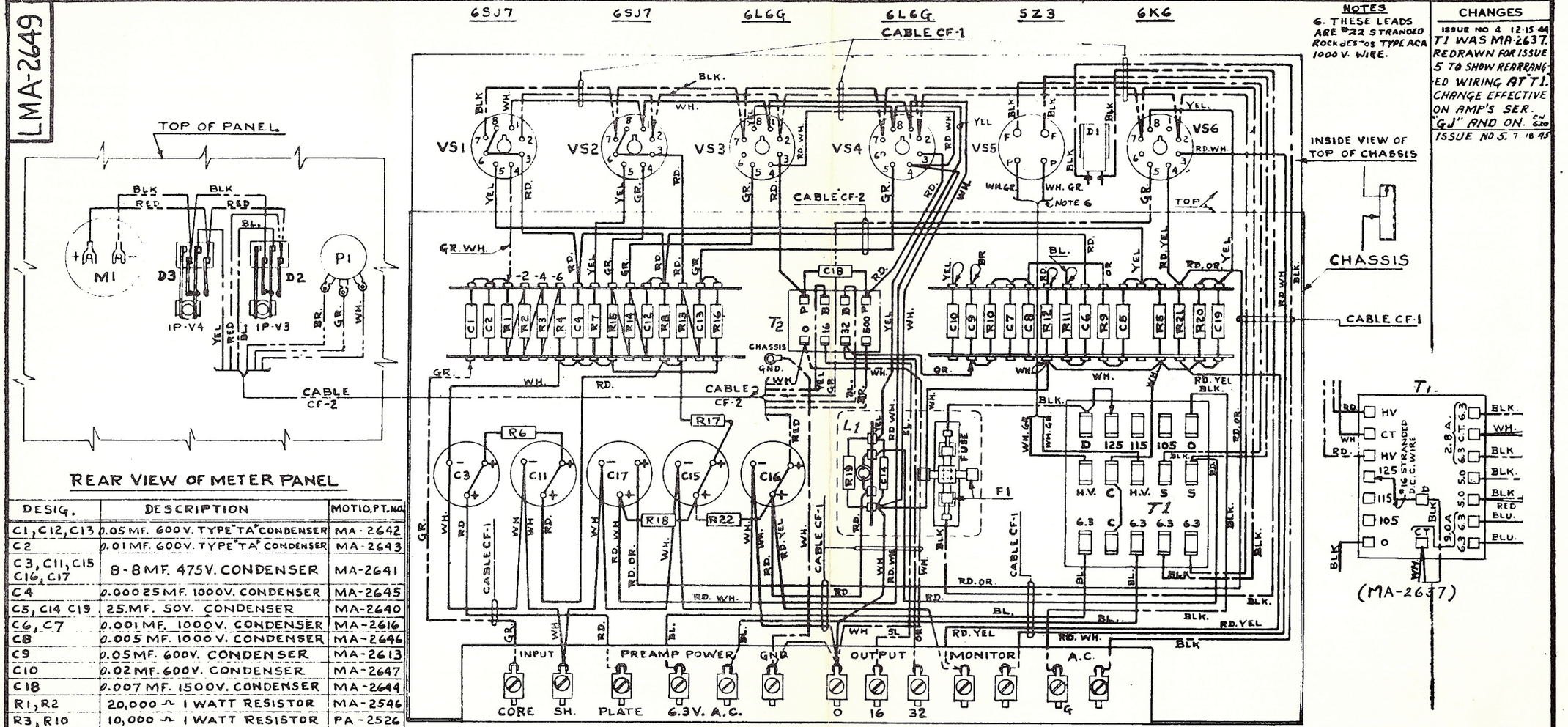

REAR VIEW OF METER PANEL

FRONT VIEW OF CHASSIS

DESIG.	DESCRIPTION	MOTIO.PT.NO.
C1, C12, C13	0.05 MF. 600 V. TYPE "TA" CONDENSER	MA-2642
C2	0.01 MF. 600 V. TYPE "TA" CONDENSER	MA-2643
C3, C11, C15 C16, C17	8-8 MF. 475 V. CONDENSER	MA-2641
C4	0.00025 MF. 1000 V. CONDENSER	MA-2645
C5, C14 C19	25 MF. 50 V. CONDENSER	MA-2640
C6, C7	0.001 MF. 1000 V. CONDENSER	MA-2616
C8	0.005 MF. 1000 V. CONDENSER	MA-2646
C9	0.05 MF. 600 V. CONDENSER	MA-2613
C10	0.02 MF. 600 V. CONDENSER	MA-2647
C18	0.007 MF. 1500 V. CONDENSER	MA-2644
R1, R2	20,000 Ω 1 WATT RESISTOR	MA-2546
R3, R10	10,000 Ω 1 WATT RESISTOR	PA-2526
R4, R15	50,000 Ω 1 WATT RESISTOR	PA-2602
R5, R7	6,000 Ω 1 WATT RESISTOR	MA-2655
R6	30,000 Ω 1 WATT RESISTOR	PA-2605
R8, R11, R13	200,000 Ω 1 WATT RESISTOR	MA-2657
R9	60,000 Ω 1 WATT RESISTOR	MA-2656
R12	100,000 Ω 1 WATT RESISTOR	MA 2542
R14	400,000 Ω 1 WATT RESISTOR	MA 2658
R16	500,000 Ω 1 WATT RESISTOR	MA-2659
R17, R18, R22	700 Ω 1 WATT RESISTOR	MA-2654
R19	125 Ω 20 WATT RESISTOR	MA-2651
R20	700 Ω 10 WATT RESISTOR	MA-2652
R21	10,000 Ω 10 WATT RESISTOR	MA-2653
D1	S.P.S.T. TOGGLE SWITCH	MA-2521
D2, D3	PUSH BUTTON SWITCH	MA-2605

DESIG.	DESCRIPTION	MOTIO.PT.NO.
P1	POTENTIOMETER, 200,000 Ω	MA-2525
M1	METER 0-200 MA.	MA-2636
T1	POWER TRANSFORMER	MA-7028
T2	OUTPUT TRANSFORMER	MA 2638
L1	CHOKE COIL	MA-2639
VS1, VS2 VS3, VS4, VS6	OCTAL SOCKET	PA-2612
VS5	4-PRONG SOCKET	MA-2604
F1	FUSE 2 AMP.	MA-2681
CF-1	MAIN CABLE FORM	MA-2665
CF-2	METER PANEL CABLE FORM.	MA-2[illegible]

NOTES

1. WIRES SHOWN THUS ——— ARE #22 GA. SOLID TINNED COPPER, TWO COTTON WAXED BRAID.
2. WIRES SHOWN THUS ——— ARE #22 GA. STRANDED TINNED, COPPER, TWO COTTON WAXED BRAID.
3. WIRES SHOWN THUS ——— ARE #16 GA. SOLID TINNED COPPER, TWO COTTON WAXED BRAID
4. WIRES ENDING THUS ——→ ARE TO BE CONNECTED IN FIELD AS REQUIRED. SEE INSTALLATION INSTRUCTIONS. WIRES ARE #22 D.C.C. STRANDED.
5. WIRES NOT OTHERWISE SPECIFIED ARE #18 SOLID TINNED BARE COPPER.

NOTES

6. THESE LEADS ARE #22 STRANDED ROCKBESTOS TYPE ACA 1000 V. WIRE.

CHANGES

ISSUE NO 4 12-15-44
T1 WAS MA-2637. REDRAWN FOR ISSUE 5 TO SHOW REARRANGED WIRING AT T1. CHANGE EFFECTIVE ON AMP'S SER. "GJ" AND ON. EN 220
ISSUE NO 5. 7-18-45

SCHEMATIC DIAGRAM DWG LMA-2650

TITLE: MA-7505-A AMPLIFIER WIRING DIAGRAM

MATERIAL ——— FINISH ———

DRAWN	CHKD.	APPVD	DATE
H.M.C.	RCJ	RCJ	8-15-44

DRWG. NO. LMA-2649

MOTIOGRAPH
CHICAGO, ILL.

"ALBARENE" No. 1001 K & E CO., N. Y.
Printed

LMA-2650

CHANGES
ISSUE NO. 6
2-5-54 HUCK

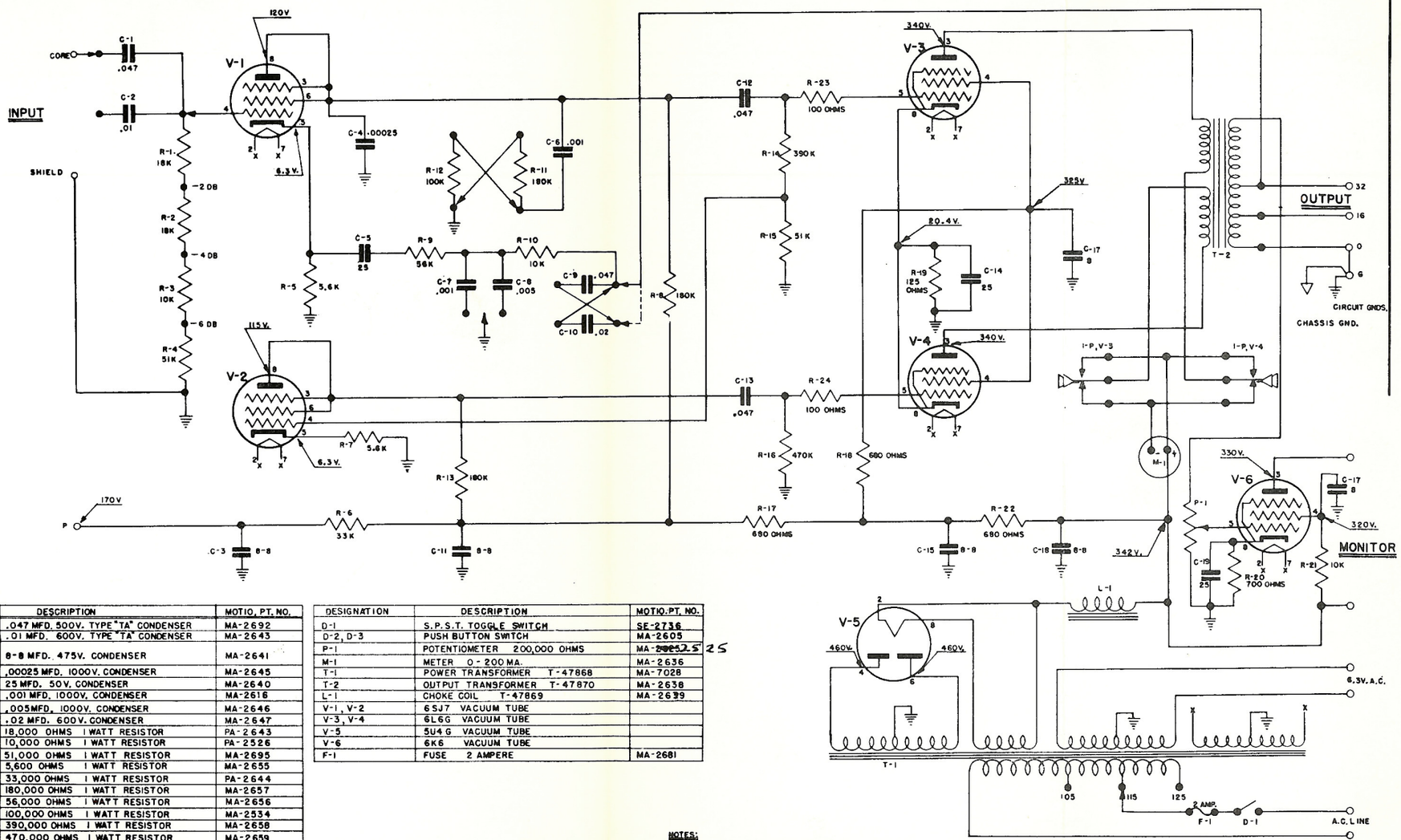

DESIGNATION	DESCRIPTION	MOTIO. PT. NO.
C-1, C-9, C-12, C-13	.047 MFD. 500V. TYPE "TA" CONDENSER	MA-2692
C-2	.01 MFD. 600V. TYPE "TA" CONDENSER	MA-2643
C-3, C-11, C-15, C-16 C-17	8-8 MFD. 475V. CONDENSER	MA-2641
C-4	.00025 MFD. 1000V. CONDENSER	MA-2645
C-5, C-14, C-19	25 MFD. 50V. CONDENSER	MA-2640
C-6, C-7	.001 MFD. 1000V. CONDENSER	MA-2616
C-8	.005 MFD. 1000V. CONDENSER	MA-2646
C-10	.02 MFD. 600V. CONDENSER	MA-2647
R-1, R-2	18,000 OHMS 1 WATT RESISTOR	PA-2643
R-3, R-14	10,000 OHMS 1 WATT RESISTOR	PA-2526
R-4, R-15	51,000 OHMS 1 WATT RESISTOR	MA-2695
R-5, R-7	5,600 OHMS 1 WATT RESISTOR	MA-2655
R-6	33,000 OHMS 1 WATT RESISTOR	PA-2644
R-8, R-11, R-13	180,000 OHMS 1 WATT RESISTOR	MA-2657
R-9	56,000 OHMS 1 WATT RESISTOR	MA-2656
R-12	100,000 OHMS 1 WATT RESISTOR	MA-2534
R-14	390,000 OHMS 1 WATT RESISTOR	MA-2658
R-16	470,000 OHMS 1 WATT RESISTOR	MA-2659
R-17, R-18, R-22	680 OHMS 1 WATT RESISTOR	MA-2654
R-19	125 OHMS 20 WATT RESISTOR	MA-2651
R-20	700 OHMS 10 WATT RESISTOR	MA-2652
R-21	10,000 OHMS 10 WATT RESISTOR	MA-2653
R-23, R-24	100 OHMS 1/2 WATT RESISTOR	MA-2688

DESIGNATION	DESCRIPTION	MOTIO. PT. NO.
D-1	S.P.S.T. TOGGLE SWITCH	SE-2736
D-2, D-3	PUSH BUTTON SWITCH	MA-2605
P-1	POTENTIOMETER 200,000 OHMS	MA-2652.5 25
M-1	METER 0-200 MA.	MA-2636
T-1	POWER TRANSFORMER T-47868	MA-7028
T-2	OUTPUT TRANSFORMER T-47870	MA-2638
L-1	CHOKE COIL T-47869	MA-2639
V-1, V-2	6SJ7 VACUUM TUBE	
V-3, V-4	6L6G VACUUM TUBE	
V-5	5U4G VACUUM TUBE	
V-6	6K6 VACUUM TUBE	
F-1	FUSE 2 AMPERE	MA-2681

NOTES:
1. WIRES ENDING THUS ⟶ ARE TO BE CONNECTED IN FIELD AS REQUIRED. SEE INSTALLATION INSTRUCTIONS.
2. ALL VOLTAGE READINGS GIVEN WERE OBTAINED WITH 20,000 OHMS PER VOLT WESTON METER.

WIRING DIAGRAM DRAWING LMA-2649

TITLE MA-7505-A AMPLIFIER SCHEMATIC DIAGRAM

MATERIAL | FINISH

DRAWN HUCK | CHKD. | APPVD | 2-5-54

DRWG. NO. LMA-2650

MOTIOGRAPH INC. CHICAGO, ILL.

DO NOT SCALE DRAWING

LMA-2650

CHANGES
ISSUE NO. 6
2-5-54 HUCK

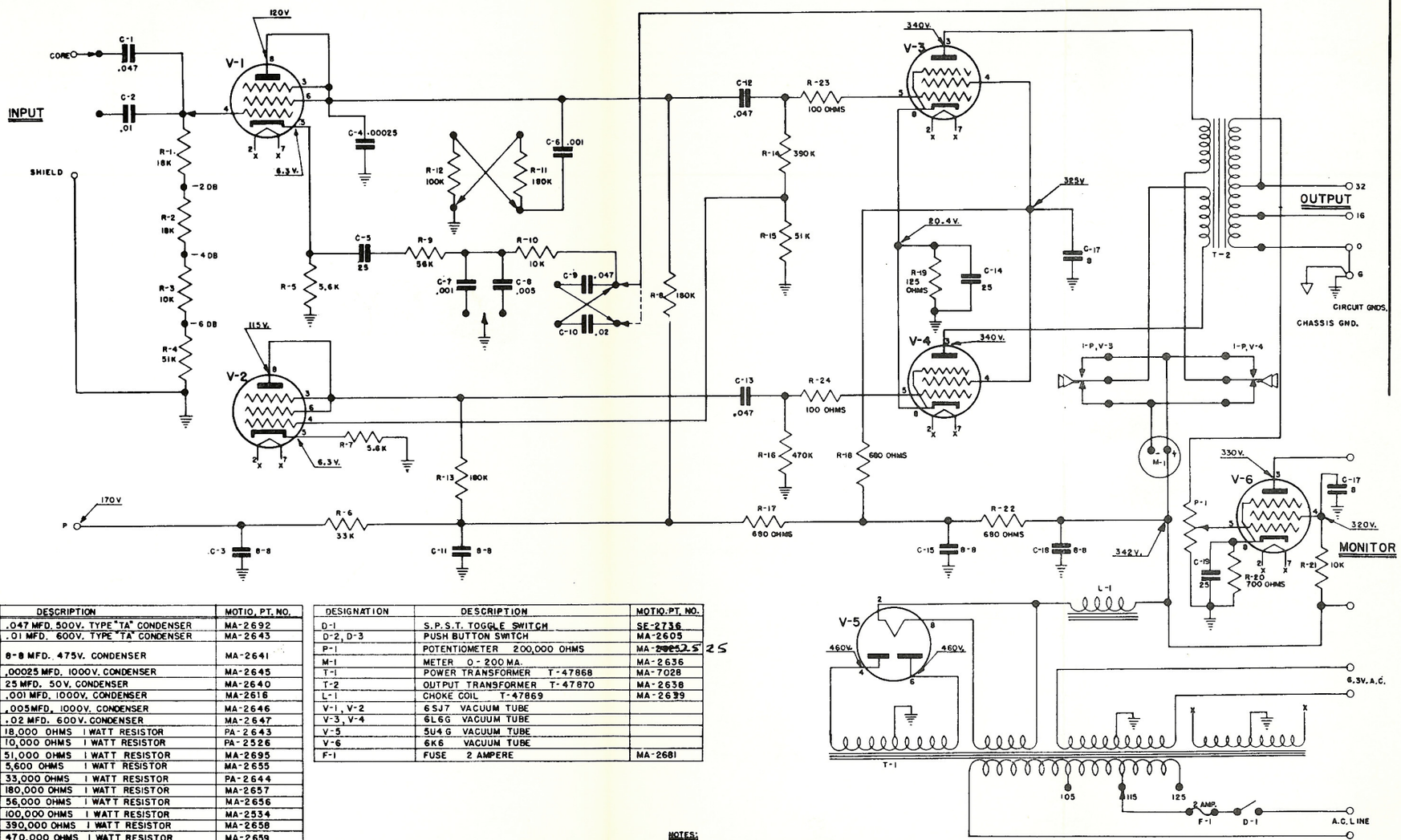

DESIGNATION	DESCRIPTION	MOTIO. PT. NO.
C-1, C-9, C-12, C-13	.047 MFD. 500V. TYPE "TA" CONDENSER	MA-2692
C-2	.01 MFD. 600V. TYPE "TA" CONDENSER	MA-2643
C-3, C-11, C-15, C-16 C-17	8-8 MFD. 475V. CONDENSER	MA-2641
C-4	.00025 MFD. 1000V. CONDENSER	MA-2645
C-5, C-14, C-19	25 MFD. 50V. CONDENSER	MA-2640
C-6, C-7	.001 MFD. 1000V. CONDENSER	MA-2616
C-8	.005 MFD. 1000V. CONDENSER	MA-2646
C-10	.02 MFD. 600V. CONDENSER	MA-2647
R-1, R-2	18,000 OHMS 1 WATT RESISTOR	PA-2643
R-3, R-14	10,000 OHMS 1 WATT RESISTOR	PA-2526
R-4, R-15	51,000 OHMS 1 WATT RESISTOR	MA-2695
R-5, R-7	5,600 OHMS 1 WATT RESISTOR	MA-2655
R-6	33,000 OHMS 1 WATT RESISTOR	PA-2644
R-8, R-11, R-13	180,000 OHMS 1 WATT RESISTOR	MA-2657
R-9	56,000 OHMS 1 WATT RESISTOR	MA-2656
R-12	100,000 OHMS 1 WATT RESISTOR	MA-2534
R-14	390,000 OHMS 1 WATT RESISTOR	MA-2658
R-16	470,000 OHMS 1 WATT RESISTOR	MA-2659
R-17, R-18, R-22	680 OHMS 1 WATT RESISTOR	MA-2654
R-19	125 OHMS 20 WATT RESISTOR	MA-2651
R-20	700 OHMS 10 WATT RESISTOR	MA-2652
R-21	10,000 OHMS 10 WATT RESISTOR	MA-2653
R-23, R-24	100 OHMS 1/2 WATT RESISTOR	MA-2688

DESIGNATION	DESCRIPTION	MOTIO. PT. NO.
D-1	S.P.S.T. TOGGLE SWITCH	SE-2736
D-2, D-3	PUSH BUTTON SWITCH	MA-2605
P-1	POTENTIOMETER 200,000 OHMS	MA-2652.5 25
M-1	METER 0-200 MA.	MA-2636
T-1	POWER TRANSFORMER T-47868	MA-7028
T-2	OUTPUT TRANSFORMER T-47870	MA-2638
L-1	CHOKE COIL T-47869	MA-2639
V-1, V-2	6SJ7 VACUUM TUBE	
V-3, V-4	6L6G VACUUM TUBE	
V-5	5U4G VACUUM TUBE	
V-6	6K6 VACUUM TUBE	
F-1	FUSE 2 AMPERE	MA-2681

NOTES:
1. WIRES ENDING THUS ⟶ ARE TO BE CONNECTED IN FIELD AS REQUIRED. SEE INSTALLATION INSTRUCTIONS.
2. ALL VOLTAGE READINGS GIVEN WERE OBTAINED WITH 20,000 OHMS PER VOLT WESTON METER.

WIRING DIAGRAM DRAWING LMA-2649

TITLE MA-7505-A AMPLIFIER SCHEMATIC DIAGRAM

MATERIAL | FINISH

DRAWN HUCK | CHKD. | APPVD | 2-5-54

DRWG. NO. LMA-2650

MOTIOGRAPH INC. CHICAGO, ILL.

DO NOT SCALE DRAWING

LSS-7540

UNLESS OTHERWISE SPECIFIED
DECIMAL DIMENSIONS ± .005"
FRACTIONAL DIMENSIONS ± 1/64"
ANGULAR DIMENSIONS ±1°

CHANGES
ISSUE NO. 1

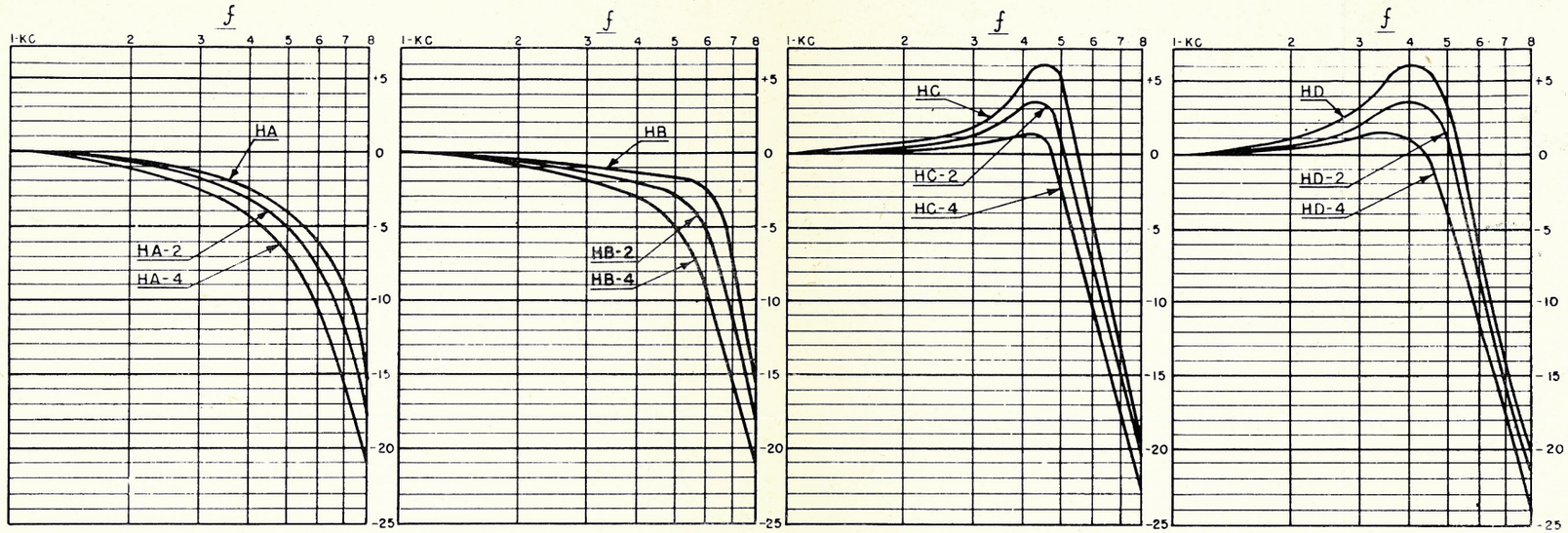

HA— CONNECTIONS TO C-7, C-8, R-11 & R-12 PER LMA-2649 & LMA-2650

HA-1 – SAME, EXCEPT R-11 & R-12 IN SERIES TO GND. FROM C-6 (NOT DRAWN BETWEEN HA-1 & HA-2)

HA-2 – SAME, EXCEPT R-11 ONLY IN SERIES TO GND. FROM C-6

HA-3 – SAME, EXCEPT R-12 ONLY IN SERIES TO GND. FROM C-6 (NOT DRAWN BETEEN HA-2 & HA-4)

HA-4 - SAME, EXCEPT R-11 & R-12 IN PARALLEL TO GND. FROM C-6

HB — SAME AS HA EXCEPT LOWER END C-7 GROUNDED.

HB-1- SAME AS HB EXCEPT R-11 & R-12 IN SERIES TO GND. FROM C-6 (NOT DRAWN)

HB 2- SAME AS HB EXCEPT R-11 ONLY IN SERIES TO GND. FROM C-6

HB-3—SAME AS HB EXCEPT R-12 ONLY IN SERIES TO GND. FROM C-6 (NOT DRAWN)

HB-4 -SAME AS HB EXCEPT R-11 & R-12 IN PARALLEL TO GND. FROM C-6

HC —SAME AS HA EXCEPT LOWER END C-8 GROUNDED

HC-1 – SAME AS HC EXCEPT R-11 & R-12 IN SERIES TO GND. FROM C-6 (NOT DRAWN.)

HC-2 – SAME AS HC EXCEPT R-11 ONLY IN SERIES TO GND. FROM C-6

HC-3 – SAME AS HC EXCEPT R-12 ONLY IN SERIES TO GND. FROM C-6 (NOT DRAWN)

HC-4 - SAME AS HC EXCEPT R-11 & R-12 IN PARALLEL TO GND. FROM C-6

HD — SAME AS HA EXCEPT LOWER ENDS OF BOTH C-7 & C-8 GROUNDED.

HD-1 – SAME AS HD EXCEPT R-11 & R-12 IN SERIES TO GND. FROM C-6 (NOT DRAWN)

HD-2 – SAME AS HD EXCEPT R-11 ONLY IN SERIES TO GND. FROM C-6

HD-3 - SAME AS HD EXCEPT R-12 ONLY IN SERIES TO GND. FROM C-6 (NOT DRAWN)

HD-4 - SAME AS HD EXCEPT R-11 & R-12 IN PARALLEL TO GND. FROM C-6

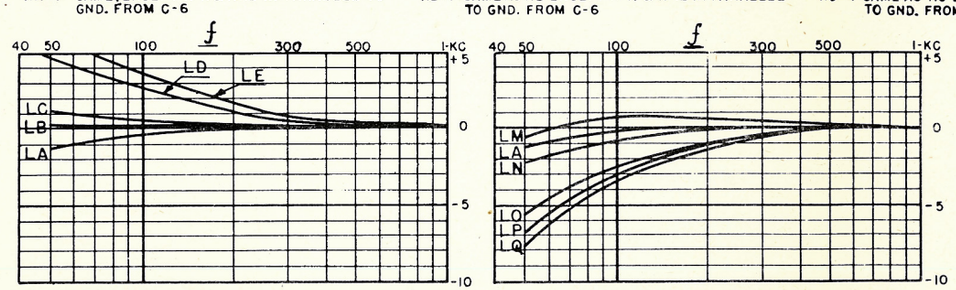

LA— CONNECTIONS TO C-1, C-2, C-9, C-10 PER LMA-2649 AND LMA-2650

LB —C-9 & C-10 PARALLEL IN FEEDBACK CIRCUIT.

LC —C-9 ONLY IN FEEDBACK CIRCUIT.

LD — C-10 ONLY IN FEEDBACK CIRCUIT.

LE —C-9 & C-10 IN SERIES IN FEEDBACK CIRCUIT.

LM– C-9 & C-10 IN SERIES IN FEEDBACK CIRCUIT C-2 SUBSTITUTED FOR C-1 IN GRID CIRCUIT OF V-1

LN — C-10 ONLY IN FEEDBACK CIRCUIT. C-2 IN PLACE OF C-1 IN GRID CIRCUIT.

LO— C-9 ONLY IN FEEDBACK CIRCUIT. C-2 IN PLACE OF C-1 IN GRID CIRCUIT.

LP – C-9 & C-10 PARALLEL IN FEEDBACK CIRCUIT. C-2 IN PLACE OF C-1 IN GRID CIRCUIT.

LQ — C-9 & C-10 SHORTED OUT OF FEEDBACK CIRCUIT. C-2 IN PLACE OF C-1 IN GRID CIRCUIT.

NOTES:

1. THESE CURVES REPRESENT THE AVERAGE SYSTEM FREQUENCY RESPONSE FOR VARIOUS EQUALIZATION CONNECTIONS FROM CONSTANT LEVEL FREQUENCY TEST FILM OF PA AND MA-7505-A AMPLIFIERS OPERATING FROM SH-7500 REPRODUCERS WITH 12' BELDEN NO. 8401 CABLE CONNECTING REPRODUCERS TO PA-7505-A AMPLIFIER AND WITH 20' BELDEN NO. 8401 CABLE BETEEN THIS AMPLIFIER AND THE MA-7505-A AMPLIFIER(S). CURVES WERE TAKEN WITH 16 OHM RESISTANCE LOAD IN PLACE OF SPEAKER NETWORK, AND WITH main VOLUME CONTROL ON STEP 6 AND ALL OTHER GAIN ADJUSTMENTS AT MAXIMUM. FOR 40' OF CABLE BETEEN AMPLIFIERS RESPONSE IS LOWERED APPROXIMATELY 0.5 DB AT 3 KC, 1.5 DB AT 5 KC, 2 DB AT 7 KC, AND 2.5 DB AT 8 KC.

2. CORRECTION FACTORS FOR TRANSMISSION TESTS ARE OBTAINED FROM THESE CURVES BY NOTING THE RESPONSE AT THE DESIRED TEST REEL FREQUENCIES, AND THEN REVERSING THE SIGNS ON THESE VALVES.

DO NOT SCALE DRAWING

ASSOCIATED DRAWINGS

LMA-2649 "MA-7505-A AMPLIFIER WIRING DIAGRAM"

LMA-2650 "MA-7505-A AMPLIFIER SCHMATIC DIAGRAM

TITLE
7505-A TYPE AMPLIFIERS
EQUALIZATION CURVES

MATERIAL		FINISH	
DRAWN H.M.C.	CHKD. R.T.V.	APPVD.	DATE

DRWG. NO. LSS-7540

MOTIOGRAPH
CHICAGO, ILL.

"ALBANENE" NO. 1081 P & E CO., N. Y. C.

Printed in U. S. A.

LMA-2696

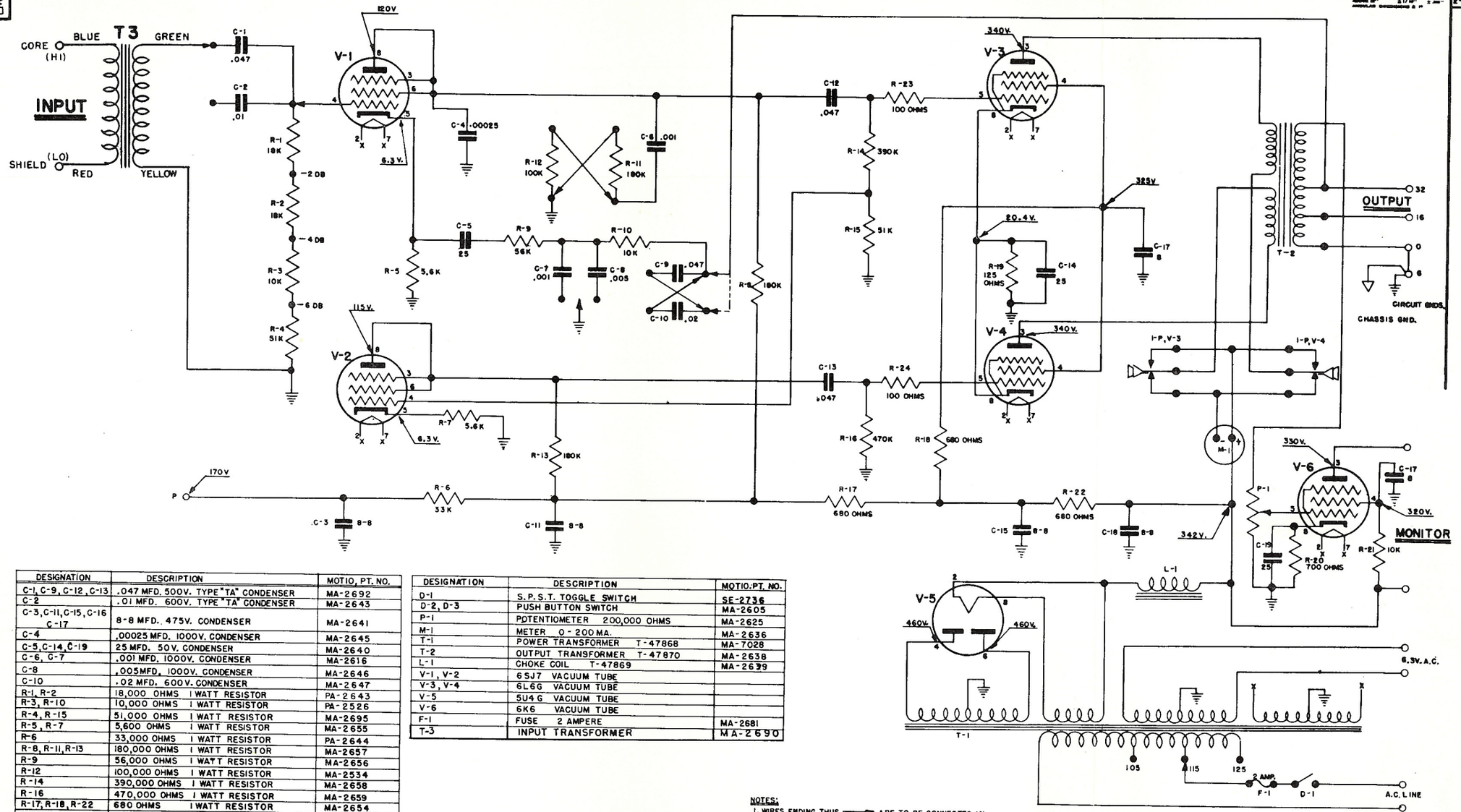

DESIGNATION	DESCRIPTION	MOTIO, PT. NO.
C-1, C-9, C-12, C-13	.047 MFD. 500V. TYPE "TA" CONDENSER	MA-2692
C-2	.01 MFD. 600V. TYPE "TA" CONDENSER	MA-2643
C-3, C-11, C-15, C-16 C-17	8-8 MFD. 475V. CONDENSER	MA-2641
C-4	.00025 MFD. 1000V. CONDENSER	MA-2645
C-5, C-14, C-19	25 MFD. 50V. CONDENSER	MA-2640
C-6, C-7	.001 MFD. 1000V. CONDENSER	MA-2616
C-8	.005 MFD. 1000V. CONDENSER	MA-2646
C-10	.02 MFD. 600V. CONDENSER	MA-2647
R-1, R-2	18,000 OHMS 1 WATT RESISTOR	PA-2643
R-3, R-10	10,000 OHMS 1 WATT RESISTOR	PA-2526
R-4, R-15	51,000 OHMS 1 WATT RESISTOR	MA-2695
R-5, R-7	5,600 OHMS 1 WATT RESISTOR	MA-2655
R-6	33,000 OHMS 1 WATT RESISTOR	PA-2644
R-8, R-11, R-13	180,000 OHMS 1 WATT RESISTOR	MA-2657
R-9	56,000 OHMS 1 WATT RESISTOR	MA-2656
R-12	100,000 OHMS 1 WATT RESISTOR	MA-2534
R-14	390,000 OHMS 1 WATT RESISTOR	MA-2658
R-16	470,000 OHMS 1 WATT RESISTOR	MA-2659
R-17, R-18, R-22	680 OHMS 1 WATT RESISTOR	MA-2654
R-19	125 OHMS 20 WATT RESISTOR	MA-2651
R-20	700 OHMS 10 WATT RESISTOR	MA-2652
R-21	10,000 OHMS 10 WATT RESISTOR	MA-2653
R-23, R-24	100 OHMS 1/2 WATT RESISTOR	MA-2688

DESIGNATION	DESCRIPTION	MOTIO. PT. NO.
D-1	S.P.S.T. TOGGLE SWITCH	SE-2736
D-2, D-3	PUSH BUTTON SWITCH	MA-2605
P-1	POTENTIOMETER 200,000 OHMS	MA-2625
M-1	METER 0-200 MA.	MA-2636
T-1	POWER TRANSFORMER T-47868	MA-7028
T-2	OUTPUT TRANSFORMER T-47870	MA-2638
L-1	CHOKE COIL T-47869	MA-2639
V-1, V-2	6SJ7 VACUUM TUBE	
V-3, V-4	6L6G VACUUM TUBE	
V-5	5U4G VACUUM TUBE	
V-6	6K6 VACUUM TUBE	
F-1	FUSE 2 AMPERE	MA-2681
T-3	INPUT TRANSFORMER	MA-2690

NOTES:
1. WIRES ENDING THUS ——→ ARE TO BE CONNECTED IN FIELD AS REQUIRED. SEE INSTALLATION INSTRUCTIONS.
2. ALL VOLTAGE READINGS GIVEN WERE OBTAINED WITH 20,000 OHMS PER VOLT WESTON METER.

ISSUE NO. 6
2-5-54 HUCK

WIRING DIAGRAM DRAWING LMA-2649
MA-7505-T
AMPLIFIER
SCHEMATIC DIAGRAM
DRAWN HUCK
DATE 2-5-54
DRWG. NO. LMA-2696
MOTIOGRAPH INC.
CHICAGO, ILL.

DO NOT SCALE DRAWING

1. DESCRIPTION- The TA-7466 Type Amplifier is a chassis-type preamplifier, with facilities for volume control of, and sound changeover between two suitable inputs; for example, two SH-7500 Reproducers. Electrically it consists of a single stage of amplification for each input, working into a common output stage through individual volume controls and a changeover switch.

2. MOUNTING- The TA-7466 Type Amplifier is intended to be mounted in a suitable housing such as the PA-7500 or PA-7015 Cabinet, mounted between the two projectors on the projection room front wall. These housings usually have as associated apparatus a set of extension rods, couplings, and knobs for extending the changeover switch and right hand input volume control to the right hand projector operating location.

3. CHARACTERISTICS

Gain - 40 db.
Volume Control - 38 db (19 - 2 db steps and OFF)
Impedance - Input - Actual 180,000 ohms. (Works from SH-7500 Reproducer)
Output - Actual 15,000 ohms. (Works into TA-7467/A Amplifier)
Vacuum Tubes - 3 W.E. Type 310-B (Do not use 310-A)
Power Supply Required - 10 VAC, 0.96 amperes; 230 VDC, 0.012 amperes. (From TA-7467/A Amplifier)
Power Supply Furnished - 90 VDC, 10 micro-amperes (For two P.E.C. circuits)
Dimensions - 8-3/4" H. x 9" W. x 5-1/4" D.
Weight - 4-3/4 lbs.

4. TESTING PROCEDURE

4.1 Although routine testing will not require that any readings be taken at the output of the TA-7466/A Amplifier, it will be useful to know the proper method of connecting a volume indicator meter.

(a) Connect the meter between ground and the junction of C-1 and R-1 of the associated TA-7467/A Amplifier, or
(b) Connect the meter to the output terminals of the TA-7466/A Amplifier with a 0.05 mf. or greater capacity condenser in series with the high side.

Caution:- Output terminals of the TA-7466/A Amplifier, and input terminals of the TA-7467/A Amplifier are at 230 volts potential with respect to ground. Operate TA-7466/A Amplifier Volume Controls to minimum value before connecting or disconnecting VI meter, to prevent excessive surges to stage speakers.

4.2 Average tube socket voltages and currents, using 20,000 ohm/volt meter, taken with volume controls at zero and changeover switch in the OFF position. DC voltage readings are with respect to tube cathode.

310-B Input tubes	310-B Output tube
E_p - 67 volts (1000 volt scale)	E_p & E_s - 117 volts (1000 volt scale)
E_s - 52 volts (1000 volt scale)	
E_g - 0.45 Volts (10 volt scale)	E_g - 5.9 volts (10 volt scale)

5. MODIFICATIONS - TA-7466 and TA-7467 Amplifiers had frequency responses to conform to Academy recommendations with six feet of #8401 Coaxial Cable installed between reproducers and preamplifiers. Greater cable lengths reduced HF response considerable. There have been instances where the six foot length was insufficient. Modifications were therefore developed to permit the use of twelve foot input cables. These modifications consist of changes in certain condenser values, and amplifiers so modified have the letter "A" added to the usual coding.

5.1 Conversion of TA-7466 Amplifiers to TA-7466-A is accomplished by replacing C-10 (Aerovox 3G-300-7-7 mf) Condenser with a Mallory FPD 450 volt, 20-20 mf condenser. This condenser and its bakelite mounting detwil constitute the ASP-14400 Conversion Parts. In order to make this change proceed as follows:-

(a) Disconnect and remove the Aerovox condenser.
(b) Using the mounting detail as a template, drill two 1/8" holes for mounting the Mallory condenser.
(c) Fasten the mounting detail in place with 6-32 x 1/4" screws and nuts.
(d) Insert the new condenser in the mounting detail and securely lock it in place by twisting its three case lugs.
(e) Connect the white wire to one of the case lugs.
(f) Connect the red wire to one insulated lug.
(g) Connect the two resistors R-8 and R-12 to the other insulated lug.

Note:- Case lugs may touch the amplifier chassis without causing trouble since the white wire is grounded at the amplifier terminal strip.

ASSOCIATED DRAWINGS

WE-7539	TA-7466A Amplifier, Schematic
WE-7540	TA-7466A Amplifier, Wiring Diagram

Issued by
Engineering Department
Printed in U. S. A.

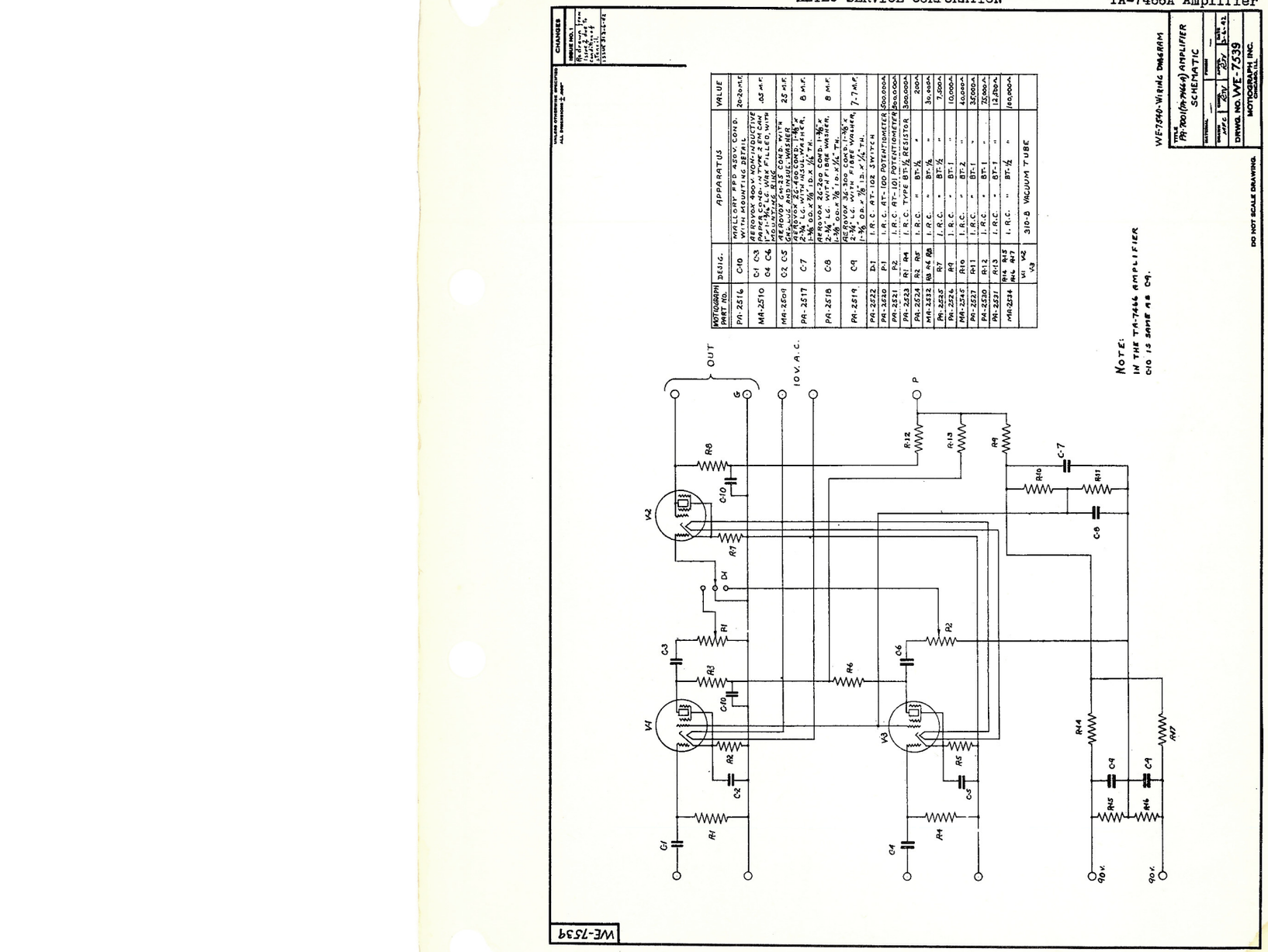

Printed in U. S. A.

WE-7540

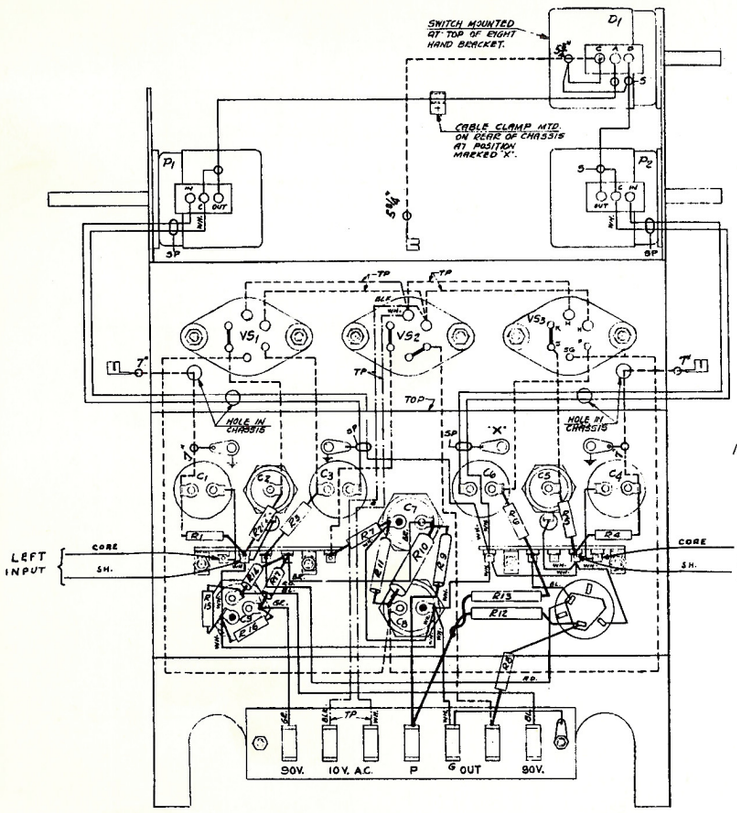

MOTOGRAPH PART NOS.	DESIG.	APPARATUS	VALUE
PA-2516	C_{10}	MALLORY FPD 450V. CONDENSER WITH MOUNTING DETAIL.	20-20 MF.
MA-2510	C_1, C_3 C_4, C_6	AEROVOX 400V. NON-INDUCTIVE PAPER CONDENSER IN TYPE 28M CAN 1"x 1 1/16" LG. WAX-FILLED, WITH MOUNTING EYE.	.05 MF.
MA-2509	C_2, C_5	AEROVOX GM-25 CONDENSER WITH END LUG & INSUL. WASHER.	.25 MF.
PA-2517	C_7	AEROVOX 25-400 CONDENSER 1/16" x 2 3/4" LG. WITH INSULATING WASHER, 1/2 OD x 3/16 ID x 1/16" THK.	8 MF.
PA-2518	C_8	AEROVOX 25-200 CONDENSER 1/16" x 2 3/4" LG. WITH INSULATING WASHER, 1/2 OD x 3/16 ID x 1/16" THK.	8 MF.
PA-2519	C_9	AEROVOX 3G 300 CONDENSER: 1/16" x 2 3/4" LG. WITH INSULATING WASHER, 1/2 OD x 3/16 ID x 1/16" THK.	7-7 MF.
PA-2522	D_1	I.R.C. AT-102 SWITCH	
PA-2520	P_1	I.R.C. AT-100 POTENTIOMETER	500,000Ω
PA-2521	P_2	I.R.C. AT-101 POTENTIOMETER	500,000Ω
PA-2523	R_1, R_4	I.R.C. TYPE BT 1/2 RESISTOR	500,000Ω
PA-2524	R_2, R_5	I.R.C. " BT 1/2 "	200Ω
MA-2532	R_3, R_6, R_9	I.R.C. " BT 1/2 "	30,000Ω
PA-2825	R_7	I.R.C. " BT 1/2 "	7,500Ω
PA-2526	R_8	I.R.C. " BT-1 "	10,000Ω
MA-2585	R_{10}	I.R.C. " BT-2 "	40,000Ω
PA-2527	R_{11}	I.R.C. " BT-1 "	35,000Ω
PA-2530	R_{12}	I.R.C. " BT-1 "	75,000Ω
PA-2831	R_{13}	I.R.C. " BT-1 "	12,500Ω
MA-2534	R_{14}, R_{15} R_{16}, R_{17}	I.R.C. " BT 1/4 "	100,000Ω
MA-2539	V_{S1}, V_{S2}, V_{S3}	EBT 35-27-CC V.T. SOCKET PER KS-7741.	

NOTE:
1. WIRES SHOWN THUS ——— ARE #22 A.W.GA. SOLID WIRE PER KS-7612, BLACK UNLESS SPECIFIED OTHERWISE.
2. WIRES SHOWN THUS – – – – – ARE 20 STRANDS #36 WIRE COVERED WITH MERCERIZED COTTON BRAID, WHOLESALE RADIO COS. K-16155 OR EQUIV.
3. WIRES SHOWN THUS – –⊖– – ARE DET. Ⓐ ASP-853A WITH LENGTH OF DET. Ⓒ AS SPECIFIED ON EACH LEAD.
4. WIRES SHOWN THUS ═══ ARE #16 A.W.GA. STRANDED WIRE PER KS-7612, TWISTED PAIR.
5. WIRE SHOWN THUS ——⊖—— ARE #22 A.W.GA. SOLID WIRE PER KS-7612 SHIELDED PER KS-1955.
6. WIRES SHOWN THUS ═══ ARE #22 A.W.GA. SOLID WIRE PER KS-7612, PAIRED AND SHIELDED PER KS-1955.
7. WIRES SHOWN THUS ═══ ARE PER NOTE: 2, TWISTED PAIR.

DWG. CHANGED FROM WITH BRAL SHOWN ELEVATION 3 APR. 3/23/40.

ISSUE 1. DID WAS REVISED 5-1-40. P-7 MF. CONDENSER. CHASSIS END-LUG IN TERM. STRIP WAS NOT SHOWN. ADV. ISSUE 2 9/11/41.

WE-7539 SCHEMATIC

TA-7466-A AMPLIFIER WIRING DIAGRAM

MAPL. — FINISH —

DR. — CH. — APP. 8-12-38

DRAWING NO. WE-7540

MOTIOGRAPH INC. CHICAGO, ILL.

PRINTED IN U. S. A.

1. DESCRIPTION - The TA-7467 Type Amplifier is a three stage resistance coupled, negative feedback, amplifier, incorporating facilities for varying the frequency response of a sound system.

2. MOUNTING - TA-7470 or unit type cabinet.

3. CHARACTERISTICS -

Gain- 55 db.
Volume Control- 10 db continuously variable with an external 20,000 ohm variable resistor connected to "VOL. CONTROL" terminals. (Strap these terminals if remote volume control is not installed. Leaving terminals open causes a 10 db loss in gain and some loss in HF response).
10 db fixed. (Tapped grid resistor in V-1 stage).
Impedance- Input- Actual - 100,000 ohms. (Works from TA-7466 Type Amplifier)
Output- Actual - Less than 0.25 ohms. Nominal- 12 or 24 ohms.
Power Output- 15 watts, 34 db/.006W. (50-5000 cps - 2% distortion)
Noise Level- -45 db/.006W (open input)
-22 db/.006W (TA-7466 plus TA-7467 Type Amplifiers - full gain)
Monitor Amplifier Stage- Gain - 6 db above main amplifier output.
Power Output- 4 watts, 28.2 db/.006W.
Impedance- Output- High, works into 5500 ohms.
Loudspeaker- TA-7472 (not part of amplifier).
Vacuum Tubes- 3 - 310-B, 2 - 300-B, 1 - 274-A, 1 - 336-A or 6K6GTG with adapter.
Power Supply Required- 105-125 volts, 50-60 cycles, 225 watts.
Power Supply Furnished- 230 VDC, 0.012 amperes, 10 VAC, 0.96 amperes.
Dimensions- 12-1/2" H. x 16-1/2" W. x 8-1/4" D.

4. OPERATING AND TESTING PROCEDURE -

4.1 Normal amplifier operation and satisfactory tube condition is indicated by readings on the panel milliammeter varying not more than plus or minus 25% from the mid-scale or 100% mark. The switch adjacent to the meter (use a coin to operate it) permits the meter to be connected to indicate the plate current in any one of the five main amplifier tubes (monitor amplifier plate current is not metered). The plate current indications in switch position 2 and 3 should not differ by more than 15% for proper operation of the phase inverter stage comprising these two tubes. Plate currents of the two 300-B tubes (switch positions 4 and 5) should not differ by more than 25% for normal amplifier output harmonic content. Under certain line voltage conditions the plate current of V-1 may be considerably above 125% without effect on amplifier performance.

4.2 Average tube socket voltages and currents, using 20,000 ohms/volt meter, taken at zero signal, monitor control OFF. D.C. voltage readings are with respect to cathode, except as noted.

310-B Tube (V-1)
E_p - 175 volts (1000 volt scale)
E_s - 160 volts (1000 volt scale)
E_g - 6.8 volts (10 volt scale)

310-B Tube (V-2)
E_p - 225 volts (1000 volt scale)
E_s - 50 volts (1000 volt scale)
E_g - 0.9 volts (10 volt scale)

310-B Tube (V-3)
E_p - 118 volts (1000 volt scale)
E_s - 118 volts (1000 volt scale)
E_g - 4.0 volts (10 volt scale)

300-B Tubes (V-4 & V-5)
E_p - 345 volts (1000 volt scale)
E_g - 75 volts (1000 volt scale)

274-A Rectifier (V-6)
E_p - 580 volts (1000 volt AC scale, either plate to GND)
E output - 440 volts (1000 volt DC scale, FIL. to GND)

336-A Tube (V-7)
E_p - 240 volts (1000 volt scale)
E_s - 245 volts (1000 volt scale)
E_g - 15.5 volts (50 volt scale)

5. MODIFICATIONS- TA-7466 and TA-7467 Type Amplifiers, had frequency response to conform to Academy recommendations with six feet of #8401 Coaxial Cable installed between reproducers and preamplifier. Greater cable lengths reduced HF response considerably. There have been instances where the six foot length was insufficient. Modifications were therefore developed to permit the use of twelve foot input cables. These modifications consist of changes in certain condenser values, and amplifiers so modified have the letter "A" added to the usual coding.

5.1 For use with TA-7466 Pre-amplifier and six foot Coaxial Cables, the TA-7467-A Amplifier should be changed to TA-7467. This is accomplished by removing condensers C-25 and C-26, and replacing the .001 mf condenser in C-15 position with a .0005 mf condenser.

Issued by
Engineering Department
Printed in U. S. A.

6. TRANSMISSION DATA-

6.1 TA-7466 and TA-7467 Amplifiers.

Equalization Condition**	Correction Factors (DB)							
	55	130	300	1KC	3KC	5KC	7KC	8KC
C-2, C-5 in, C-7 open	-3.0	-1.8	-0.2	0	0	0	0	0
C-2, C-5, C-7 in	-1.4	-0.2	0	0	0	0	0	0
C-2 in, C-5, C-7 shorted	0.7	0.1	0	0	0	0	0	0
C-2 open, C-5, C-7 shorted	1.7	0.3	0	0	0	0	0	0
C-2, C-7 open, C-5 in	-2.7	-2.3	-1.0	0	0	0	0	0
C-2 open, C-5, C-7 in	-1.0	-0.7	-0.1	0	0	0	0	0
C-6 / C-9								
.00025* / open	0	0	0	0	-1.7	-2.0	-1.4	-0.7
.0005* / open	0	0	0	0	-1.1	-0.8	0.5	1.3
.0005* / .001*	0	0	0	0	-1.0	-0.1	1.6	2.8
.001* / open	0	0	0	0	-0.3	1.3	3.6	4.8

6.2 TA-7466-A and TA-7467-A Amplifiers.

Equalization Condition**	Correction Factors (DB)							
	55	130	300	1KC	3KC	5KC	7KC	8KC
C-2, C-5 in, C-7 open	-1.7	-1.7	0.1	0	0	0	0	0
C-2, C-5, C-7 in	-0.1	0.7	1.4	0	0	0	0	0
C-2 in, C-5, C-7 shorted	4.4	2.7	1.8	0	0	0	0	0
C-2 open, C-5, C-7 shorted	5.3	3.1	1.9	0	0	0	0	0
C-2, C-7 open, C-5 in	-0.9	-1.0	0.4	0	0	0	0	0
C-2 open, C-5, C-7 in	0.8	0.9	1.3	0	0	0	0	0
C-6 / C-9 / C-26								
open / open / in	0	0	0	0	-4.7	-6.4	-6.9	-6.6
.00025* / open / in	0	0	0	0	-4.5	-5.9	-6.0	-5.6
.0005* / open / in	0	0	0	0	-3.9	-5.0	-4.4	-3.7
.0005* / .001* / in	0	0	0	0	-3.6	-4.1	-3.2	-2.4
.001* / open / in	0	0	0	0	-2.8	-2.7	-1.5	-0.4
.0005* / open / open	0	0	0	0	-2.0	0.9	1.2	2.6
.0005* / .001* / open	0	0	0	0	-1.3	0.4	3.0	4.4
.001* / open / open	0	0	0	0	-1.8	1.4	4.4	5.9

* These values are obtained by interchanging C-6, C-9, and C-24.

** HF equalization factors include the effect of 20' of #8401 cable between TA-7466 Type and TA-7467 Type Amplifiers.

6.3 SH-7500 Reproducer Sets.

	Correction Factors (DB)							
	55	130	300	1KC	3KC	5KC	7KC	8KC
SH-7500 Repro., SH-2526 Lens, SH-2672 (6-A cell), & 6' #8401 cable.	0	0	0	0	2.3	5.1	8.3	10.0
SH-7500 Repro., SH-2526 Lens, SH-2672 (6-A cell), & 12' #8401 cable.	0	0	0	0	3.0	6.6	10.8	13.0

ASSOCIATED DRAWINGS

WE-7537	TA-7467-A Amplifier, Schematic
WE-7538	TA-7467-A Amplifier, Wiring Diegram

Issued by
Engineering Department
Printed in U. S. A.

WE-7537.

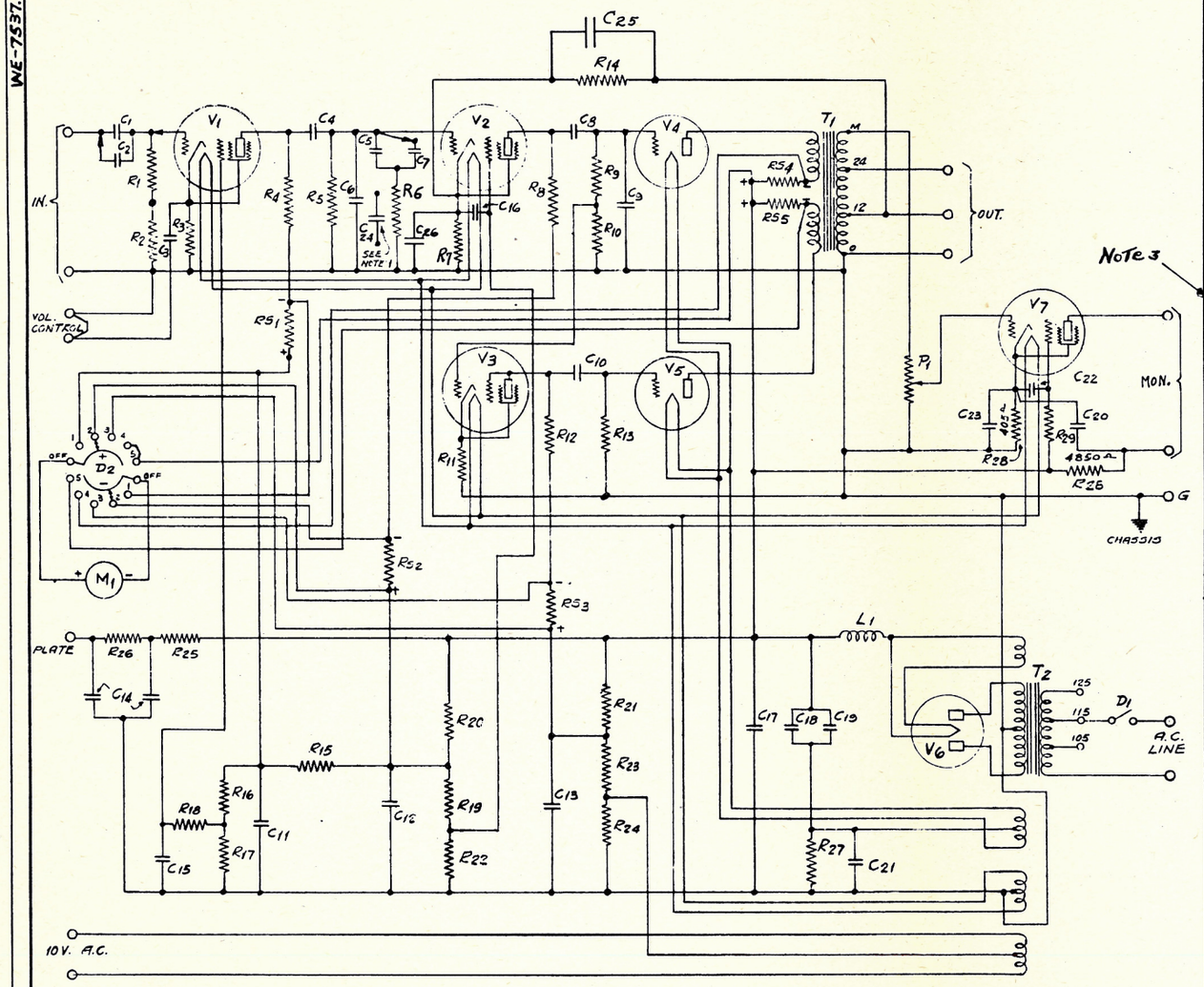

Note 3

MOTIOGRAPH PART No.	DESIG.	APPARATUS	VALUE	
MA-2567	C26	AEROVOX #489 CONDENSER	.025 MF.	*
MA-2519	C16	AEROVOX #684 CONDENSER	.1 MF	
MA-2518	C24	AEROVOX #1467 CONDENSER (SEE NOTE 1)	.00025 MF.	
MA-2508	C1, C2	AEROVOX #684 CONDENSER	.05 MF.	
MA-2509	C3-C23	AEROVOX GM-25 CONDENSER WITH INSULATING WASHER & CAN LUG.	25 MF.	
MA-2510	C4, C8, C10	AEROVOX 400V. NON-IND. PAPER COND. IN TYPE 2EM CAN 1"x1 13/16" x WAX FILLED, WITH MOUNTING RING.	.05 MF.	
MA-2583	C5, C7, C25	AEROVOX #1467 CONDENSER	.01 MF.	*
MA-2584	C9, C15	AEROVOX #1467 CONDENSER	.001 MF.	*
MA-2587	C11, C13	AEROVOX I-450 CONDENSER	16 MF.	
MA-2586	C12	AEROVOX I-475 CONDENSER	8 MF.	
MA-2585	C14	AEROVOX GG-450 CONDENSER WITH INSULATING WASHER & CAN LUG	8-8 MF.	
MA-2567	C6	AEROVOX #1467 CONDENSER	.0005 MF.	*
MA-2516	C17, C18, C19 C20, C22	AEROVOX I-G-8 CONDENSER. 500V. D.C. OPER. VOLTAGE 1 3/8" x 3 1/4" LG. CAN.	8 MF.	
MA-2517	C21	AEROVOX GM-100 CONDENSER WITH INSULATING WASHER & CAN LUG.	25 MF.	
MA-2521	D1	H&H #20992 TUMBLER SWITCH.		
MA-2522	D2	YAXLEY R.L. SINGLE GANG SWITCH PER ASP-8857, ISSUE 3.		
MA-2523	L1	TA-4205 RETARD COIL		
MA-2524	M1	TRIPLETT #223 MILLIAMETER 0-1 MA. PER TRIPLETT N.Y. OFFICE QUOTATION #191.		
MA-2526	P1	I.R.C. TYPE "C" POTENTIOMETER (SEE NOTE 2)	200,000 Ω	±10%
MA-2531	R1, R10	I.R.C. TYPE BT 1/2 RESISTOR	70,000 Ω	
MA-2532	R2	" " BT 1/2 "	30,000 Ω	
MA-2533	R3	" " BT 1/2 "	5,500 Ω	
MA-2534	R4	" " BT 1/2 "	100,000 Ω	
MA-2535	R5, R13	" " BT 1/2 "	500,000 Ω	
MA-2536	R6	" " BT 1/2 "	65,000 Ω	
MA-2531	R12	" " BT 1/2 "	75,000 Ω	
MA-2537	R7, R11, R14	" " BT 1/2 "	3,000 Ω	
MA-2538	R8	" " BT 1/2 "	125,000 Ω	
MA-2539	R9	" " BT 1/2 "	400,000 Ω	
MA-2540	R15	" " BT-2 "	17,000 Ω	
MA-2541	R16	" " BT-2 "	50,000 Ω	
MA-2547	R17	" " BT-1 "	120,000 Ω	
MA-2542	R18	" " BT-1 "	100,000 Ω	
MA-2543	R19	" " BT-2 "	110,000 Ω	
MA-2544	R20, R25, R26	" " BT-2 "	10,000 Ω	
MA-2545	R21	" " BT-2 "	40,000 Ω	
MA-2546	R22	" " BT-1 "	20,000 Ω	
MA-2553	R23	" " BT-2 "	75,000 Ω	
MA-2552	R24	" " BT-1 "	7,500 Ω	
MA-2548	R27	" " M-1191 "	570 Ω	
MA-2549	R28	" " M-1192 "	405-4850 Ω	
MA-2550	R29	" " BT-2 "	25,000 Ω	
MA-2554	R51	DAVEN TYPE "BAW" RESISTOR	33.0 Ω ±1%	
MA-2555	R52	" " "BAW" "	28.4 Ω ±1%	
MA-2556	R53	" " BAW "	13.4 Ω ±1%	
MA-2557	R54, R55	" " BAW "	.256 Ω ±1%	
MA-2505	T1	TA-4206 TRANSFORMER		
MA-2506	T2	TA-4207 "		
	V1, V2, V3	310-B VACUUM TUBE		
	V4, V5	300-A VACUUM TUBE		
	V6	274-A VACUUM TUBE		
	V7	336-A VACUUM TUBE		

DWG. CORRESPONDS WITH E.R.P. DWG. # A50-8952 ISSUE 3. E.K. 1-16-40 APP'D

ISSUE 1. 7-15-41 RTD. CLS & C26 ADDED. C16 WAS .05MF MF. "A" WAS ADDED. MOTIOGRAPH PART No's ADDED.

ISSUE 2 8-30-41 RTJ

M-1 meters may be as shown (Metal Case) or Model 221 (Bakelite Case) or Marion Bakelite Case. Specify type when ordering. In some T-1 transformers internal leads to "B" terminals are reversed causing switch position 4 to read V-5 plate current and vice versa. This may be corrected by reversing Blue & Yellow wires at "B" terminals.

NOTE:

1. THIS CONDENSER IS USED FOR CHANGING THE FREQUENCY CHARACTERISTIC.
2. I.R.C. TYPE "CS" POT. TAPER "C" DIMEN. A 7/8" FLAT DIMS B-1/2, C 5/8". CLOCK-WISE ROTATION LOOKING AT FRONT, NO SWITCH OR LOCATING PIN FURNISH 2 HEX. NUTS.

NOTE:

3.- or GLS-100V-25 MF

* IN TA-7467 AMPLIFIERS C_{25} AND C_{26} WERE OMITTED AND C_{15} WAS .0005 MF.

WE-7538 - WIRING DIAGRAM

ASSOCIATED DRAWINGS

TA-7467A AMPLIFIER

SCHEMATIC

WESTERN ELECTRIC SOUND SYSTEMS

MOTIOGRAPH, INC. CHICAGO, ILL.

DRAWN BY G.L.P. DATE 6-17-35 APP'D

CHECKED BY M-J-B DATE 8-6-39 WJB 12W

SCALE

WE-7537

WE-7537

PRINTED IN U. S. A.

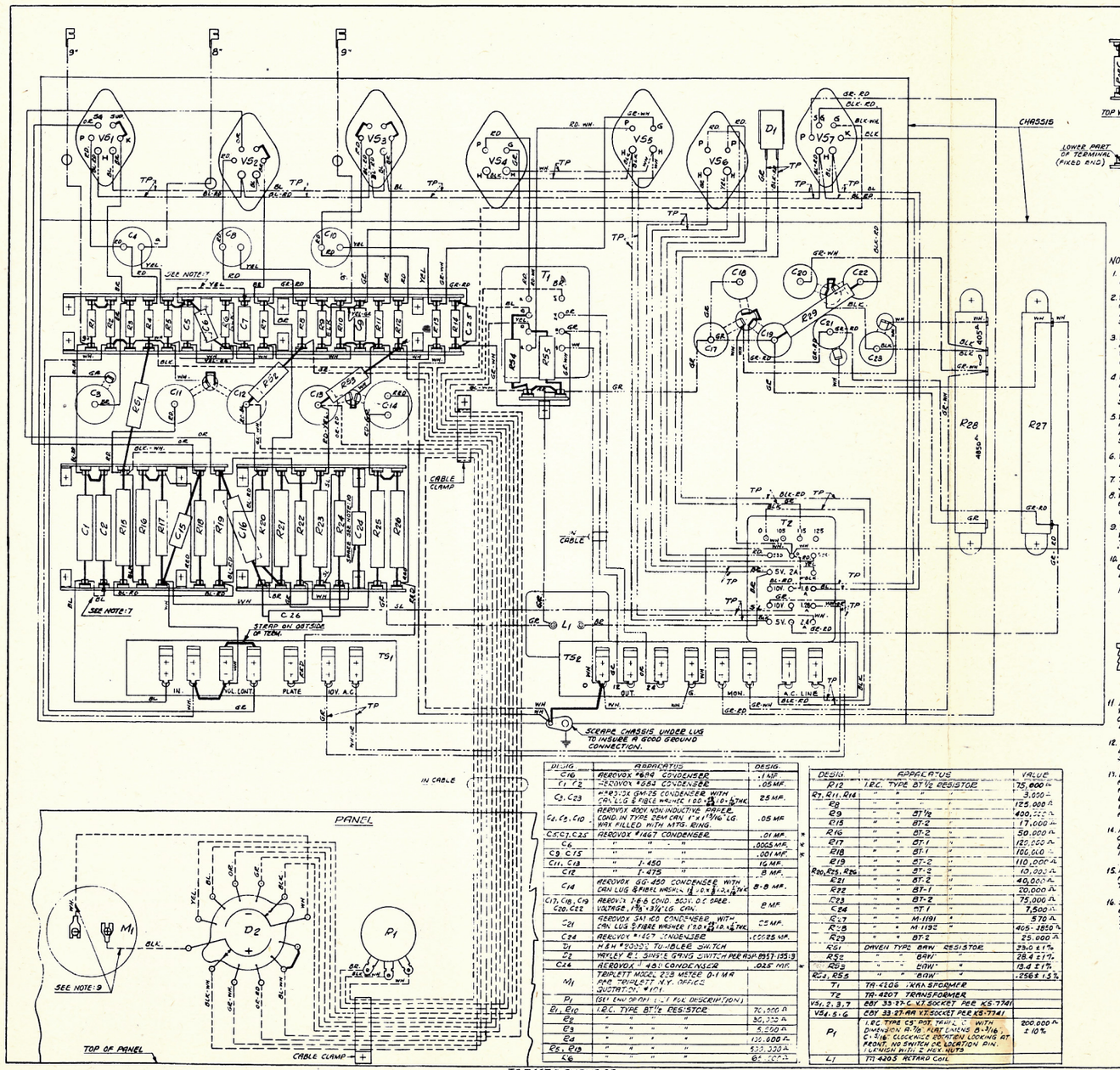

BEND 90° AND SOLDER DO NOT WRAP AROUND TERMINAL.

ALL WIRING TO BE FROM THIS PART OF TERMINAL

TOP VIEW SIDE VIEW

FIG. 'C'

LOWER PART OF TERMINAL (FIXED END)

UPPER PART OF TERMINAL

END TO BE LIFTED

FIG. 'D'

NOTE:

1. ALL WIRES TO BE OPEN FORMED UNLESS OTHENISE SPECIFIED.
2. WIRES SHOWN THUS ——— ARE #22 A.W.GA. SOLID WIRE PER KS-7612 COLOR AS SPECIFIED.
3. WIRES SHOWN THUS - - - - - ARE #22 A.W.GA. STRANDED WIRE PER KS-7612 COLOR AS SPECIFIED.
4. WIRES SHOWN THUS —·—·— ARE 1A ESA-338610 WITH LENGTH OF 1A ESA 338570 AS SPECIFIED ON BRKN LEAD.
5. WIRES SHOWN THUS ——— ARE #16 A.W.GA. SOLID WIRE PER KS-7612 COLOR AS SPECIFIED.
6. WIRES SHOWN THUS TP A DENOTE TWISTED PAIR.
7. THESE WIRES TO BE 2 1/16" LONG. SEE FIG 'D' FOR METHOD OF WIRING
8. WIRES SHOWN THUS ——— ARE #16 A.W.GA. BARE TINNED COPPER WIRE.
9. THESE WIRES TO BE EQUIPPED WITH SUITABLE SPADE TERMINALS.
10. THIS CONDENSER IS USED TO CHANGE FREQUENCY CHARACTERISTICS PER SYSTEM INST. NOTES; MOUNTED IN THE FOLLOWING MANNER. SLIP PIGTAILS OF COND. THROUGH EYELETS AND (a) BEND OVER TOP OF TERM. STRIPS, DO NOT SOLDER, OR (b) SOLDER IN PLACE WITHOUT BENDING LEADS

(a) OR (b)

11. HEATER CONNECTIONS OF V51, V52, V53 & V57 SHALL BE PLACED IN CORNER FORMED BY TOP AND BACK OF CHASSIS.
12. CONDENSER CAN LUGS SHALL BE COVERED WITH BLACK SPAGHETTI TOE FULL LENGTH
13. LOCATIONS OF SMALL I.R.C. RES. AND (*1467 REARVOX) COND. SHOWN ARE APPROX. AND ARE TO BE LOCATED FOR BEST POSSIBLE ARRANGEMENT IN FINAL ASSEMBLY.
14. PIGTAILS OF THE ABOVE RES. AND COND. SHALL BE CAREFULLY BENT TO AVOID LOOSENING LEAD INSIDE OF UNIT.
15. FOR METHOD OF WIRING RESISTORS AND CONDENSERS TO CONC'M TERMINALS SEE FIG. 'C'.
16. SUFFIX II NI SUFX SHALL BE ALLOWED IN WIRING TO T3 & T5 TO PREVENT DEFORMING OF TERMINAL STRIP.

M-1 meters may be as shown (Metal Case) or Model 221 (Bakelite Case) or Marion Bakelite Case. Specify type when ordering. In some T-1 transformers internal leads to "B" terminals are reversed causing switch position 4 to read V-5 plate current and vice versa. This may be corrected by reversing Blue & Yellow wires at "B" terminals.

DESIG.	APPARATUS	DESIG. VALUE
C16	AEROVOX *684 CONDENSER	.1 MF.
C1, C2	AEROVOX *884 CONDENSER	.05 MF.
C3, C23	AEROVOX GM-25 CONDENSER WITH CAN LUG & FIBRE WASHER 1.00-.81 DIA. .10-.47 THK.	25 MF.
C4, C9, C10	AEROVOX 400V NON INDUCTIVE PAPER COND. IN TYPE 284 CAN 1" x 1 15/16" LG. WAX FILLED WITH MTG. RING.	.05 MF.
C5, C7, C25	AEROVOX *1467 CONDENSER	.01 MF.
C6	" " "	.0025 MF.
C8, C15	" " "	.001 MF.
C11, C18	" 1-450 "	16 MF.
C12	" 1-475 "	8 MF.
C14	AEROVOX GG-450 CONDENSER WITH CAN LUG & FIBRE WASHER 1.00-.81 DIA. .10-.47 THK.	8-8 MF.
C17, C19, C20, C22	AEROVOX 1-8-5 COND. 350V. D.C. SPEC. VOLTAGE, 1 7/8"-3 3/4" LG. CAN.	8 MF.
C21	AEROVOX SM 100 CONDENSER WITH CAN LUG & FIBRE WASHER 1.00-.81 DIA. .10-.47 THK.	.05 MF.
C24	AEROVOX *1427 CONDENSER	.000225 MF.
D1	H & H #30330 TUMBLER SWITCH	
D2	YAXLEY #1 SINGLE GANG SWITCH PER RSP-8957-135-3	
C26	AEROVOX *484 CONDENSER	.025 MF.
M1	TRIPLETT MODEL 233 METER, 0-1 MA PER TRIPLETT N.Y. OFFICE QUOTATION *1101	
P1	(SEE END OF PART 1 - 1 FOR DESCRIPTION)	
R1, R10	I.R.C. TYPE BT½ RESISTOR	70,000 Ω
R2	" " " "	30,330 Ω
R3	" " " "	5,050 Ω
R4	" " " "	120,000 Ω
R5, R13	" " " "	530,330 Ω
R6	" " " "	61,000 Ω

DESIG.	APPLICATION	VALUE
R12	I.R.C. TYPE BT½ RESISTOR	75,000 Ω
R7, R11, R14	" " "	3,000 Ω
R8	" " "	125,000 Ω
R9	" " BT½	400,000 Ω
R15	" " BT-2	17,000 Ω
R16	" " BT-2	50,000 Ω
R17	" " BT-1	120,000 Ω
R18	" " BT-1	100,000 Ω
R19	" " BT-2	110,000 Ω
R20, R25, R26	" " BT-2	10,000 Ω
R21	" " BT-2	40,000 Ω
R22	" " BT-1	20,000 Ω
R23	" " BT-2	75,000 Ω
R24	" " 7T1	7,500 Ω
R27	" " M-1191	570 Ω
R28	" " M-1192	405-1810 Ω
R29	" " BT-2	25,000 Ω
RS1	DAVEN TYPE BRN RESISTOR	33.0 ±1%
RS2	" " BRN "	28.4 ±1%
RS3	" " BRN "	13.4 ±1%
RS4, RS5	" " BRN "	.256 ±1%
T1	TA-4206 "WA" TRANSFORMER	
T2	TA-4207 TRANSFORMER	
V51, 2, 3, 7	8DT 33-27-C V.T. SOCKET PER KS-7741	
V54, 5, 6	8DT 33-27-AA V.T. SOCKET PER KS-7741	
P1	I.R.C. TYPE CT-201 TRIMIT 2" WITH DIMENSION A-7/16 FIVE LUGS B-1/16 C-5/16 CLOCKWISE ROTATION LOOKING AT FRONT, NO SWITCH OR LOCATION PIN. 1 LENGTH WITH 2 HEX NUTS	200,000 Ω ±10%
L1	TA-4205 RETARD COIL	

TA-7467A AMPLIFIER

* IN TA-7467 AMPLIFIERS C25 AND C26 WERE OMITTED AND C12 WAS .0005 MF.

NOTE: SEE WE-7537 FOR MOTIOGRAPH PART NOS. OF COMPONENTS OF TA-7467 AMPLIFIER.

REVISIONS	APP'D
REVISED WITHOUT CIRCUIT CHANGE FROM ECP1 AER-8217-A	
ISSUE 1 7-15-40	KTH
C25-V52,3 ADDED C12 VALUE CHANGED "A" NOTE ADDED.	
ISSUE 2 9-15-41	RDV

WE-7537 SCHEMATIC

ASSOCIATED DRAWINGS

TA-7467-A AMPLIFIER WIRING DIAGRAM

WESTERN ELECTRIC SOUND SYSTEMS
MOTIOGRAPH, INC. CHICAGO, ILL.

DRAWN BY G.L.P. DATE 2-13-38 APP'D
CHECKED BY E.M. DATE 2-14-38 APP'D JW

SCALE — WE-7538

1. GENERAL

1.1 The SE-7628 suppressor amplifier is a control device which can be used in connection with the fourth channel of any standard stereophonic sound system. Its primary function is to make the auditorium speakers inoperative except during the periods when sound is to be reproduced through these speakers.

1.2 The control medium is a 12 KC signal that is recorded along with the sound effects that are to be reproduced. When this control frequency is present it causes the circuit to respond in such a way that the relay contacts transmit the sound to the auditorium speakers. Absence of the control tone causes the relay to operate, this opens the sound circuit from the preamplifier and places 2200 ohms across the primary of the output transformer resulting in no sound or noise being transmitted to the auditorium speakers.

1.3 The circuit also provides considerable attenuation to the 12 KC signal so it will not be heard when the sound effects are being reproduced.

2. INSTALLATION

2.1 The suppressor amplifier contains its own power supply (operated from the 115 volt line) and its installation is simplified as it can be wall mounted.

2.2 The MA-2690 output transformer will couple the unit to any high impedance amplifier (such as the Motiograph MA-7505 series) having one side of the input grounded. With amplifiers having high impedance input transformers, such as the Altec Lansing 1520T and 1530T, the transformer should be by-passed to provide a better impedance match. If the unit is to be used with an amplifier having a 500 ohm input the MA-2690 transformer should be replaced with our SE-3076 transformer.

3. TEST AND ADJUSTMENT PROCEDURE

3.1 Test

3.11 When tubes warm up the relay should operate to its "down position.

3.12 A 12 KC loop (ED-42A) running thru the machine with the preamplifier gain at maximum should cause the relay to release to its "upper" position. The relay should stay in this position while the gain control is backed off 8 - 20 db depending upon position of P3 control and 12 KC response of the preamplifier. The P3 control provides maximum sensitivity when in its clockwise position. It is expected that normal operation will be provided at approximately mid-position.

3.13 With the gain control on maximum the 12 KC signal from the ED-42A loop should not be audible in the auditorium speakers and when measured at the output terminals should be approximately 30 db below the 1 KC level. As ED-42A has a 12 KC signal recorded on track 2, by reversing the loop, the 12 KC signal level may be checked without interference from the 1 KC signal and this reading compared with the 1 KC level obtained by threading the loop in the normal manner.

3.2 Adjustment - See Note

3.21 With AC switch "off" terminate the output with 50,000 ohms.

3.22 Run ED-42A loop (track 2 in position 4).

3.23 With P3 in its midposition, connect meter to the output terminals and adjust C_1, P_1, and P_2, in this order, until a minimum 12 KC reading is obtained. Several individual adjustments must be made to obtain lowest value.

Issued by
Engineering Department
Printed in U. S. A.

ALTEC SERVICE CORPORATION
MOTIOGRAPH
SOUND EQUIPMENT BULLETIN

June 15, 1954

Note:- Amplifiers are adjusted before shipment. Further adjustment should be made only if tests indicate it to be necessary.

ASSOCIATED DRAWING

RSE-7628

Issued by
Engineering Department
Printed in U. S. A.

RSE-7628

UNLESS OTHERWISE SPECIFIED

BASIC DIM.	FRAC.	DEC.
UP TO 6"	±1/128"	± .008"
ABOVE 6" TO 12"	±1/64"	± .016"
ABOVE 12" TO 24"	±1/32"	± .032"
ABOVE 24"	±1/16"	± .063"

ANGULAR DIMENSIONS ± 1°

CHANGES

NONE NO. 1

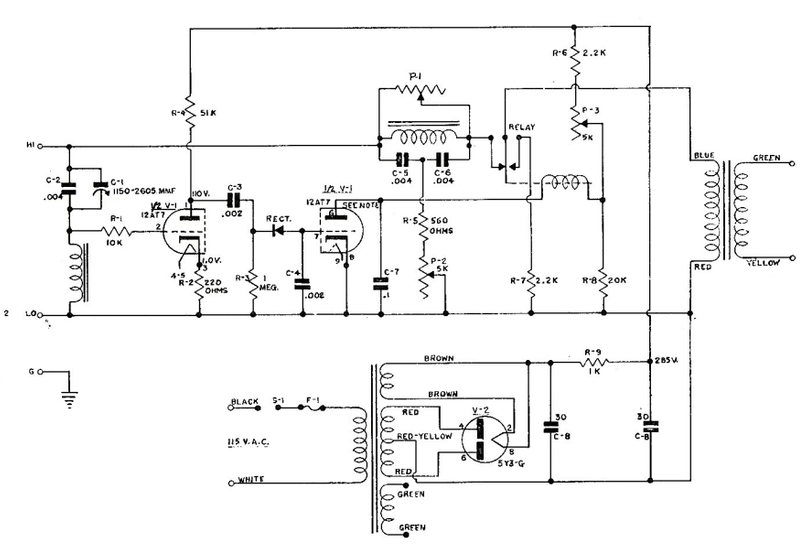

ITEM	PART NO.	DESCRIPTION
C-1	SE-3075	ARCO 313 CAPACITOR, 1150-2605 MMFD
C-2,5,6	SE-3068	.004 MFD. CONDENSER
C-3,4	SE-3069	.002 MFD. CONDENSER
C-7	SE-3081	.1 MFD. CONDENSER
C-8	SE-3072	30-30 MFD. CONDENSER
R-1	PA-2526	10,000 OHMS, 1 WATT RESISTOR
R-2	SE-3077	220 OHMS, 1/2 WATT RESISTOR
R-3	SE-3078	1 MEGOHM, 1/2 WATT RESISTOR
R-4	MA-2695	50,000 OHMS, 1 WATT RESISTOR
R-5	SE-3079	560 OHMS, 1/2 WATT RESISTOR
R6,7	SE-3066	2,200 OHMS, 1 WATT RESISTOR
R-8	SE-3070	20,000 OHMS, 10 WATT RESISTOR
R-9	SE-3080	1,000 OHMS, 1 WATT RESISTOR
L-1	SE-3073	30 MH TOROID INDUCTANCE
L-2	SE-3074	100 MH TOROID INDUCTANCE
V-1		12 AT7 TUBE
V-2		5Y3G TUBE
RECTIFIER	SE-3063	G.E., 1N48
P-1	SE-3065	25,000 OHMS, POTENTIOMETER
P-2,3	SE-3064	5,000 OHMS, POTENTIOMETER
T-1	MA-2690	OUTPUT TRANSFORMER
T-2	SE-3067	POWER TRANSFORMER
RELAY	SE-3071	LS-5 RELAY, 10,000 OHMS
S-1	SE-2736	S.P.S.T. SWITCH
F-1	SE-3082	1 AMPERE FUSE

NOTE:- PLATE CURRENT AND VOLTAGE MEASUREMENTS AT PIN 6 OF 12AT7 TUBE.
125 V. - NO SIGNAL
225 V. - WITH AVERAGE SIGNAL
6 MA. - NO SIGNAL
0 MA. - WITH AVERAGE SIGNAL

TITLE
SE-7628
SUPPRESSOR AMPLIFIER

MATERIAL	FINISH		
DRAWN HUCK	CHKD.	APPVD.	DATE 7-31-54

DRWG. NO. RSE-7628

MOTIOGRAPH INC.
CHICAGO, ILL.

DO NOT SCALE DRAWING

ALTEC SERVICE CORPORATION

SUPPRESSER AMPLIFIER, SE-7628

10M-7/5

Printed in U. S. A.

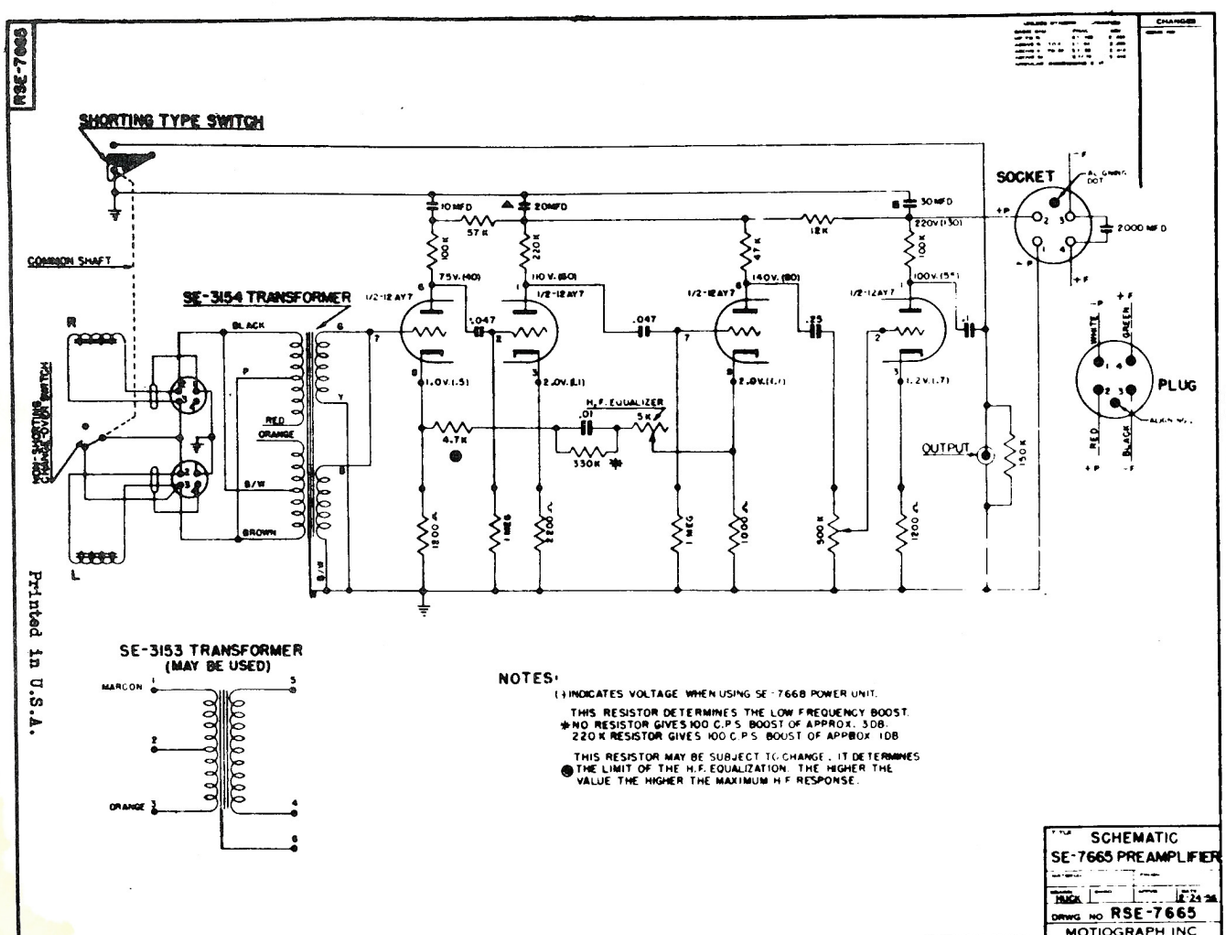

Printed in U.S.A.

ALTEC SERVICE COMPANY

SE-7665 PRE-AMPLIFIER

5034.85

LPA-7025

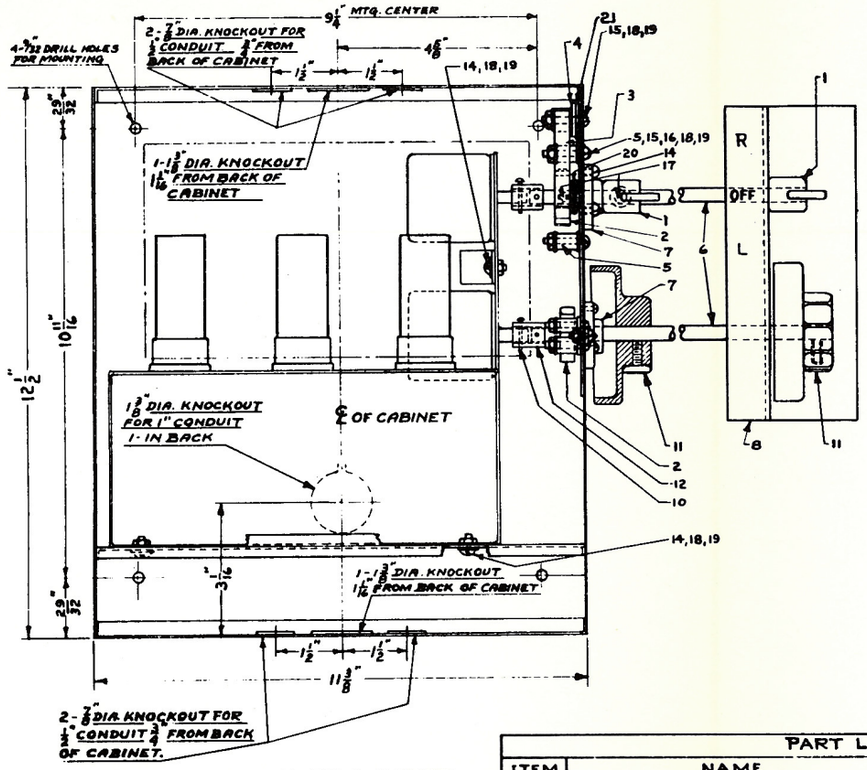

FRONT VIEW WITH COVER REMOVED AND AMPLIFIER IN PLACE

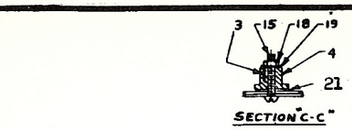

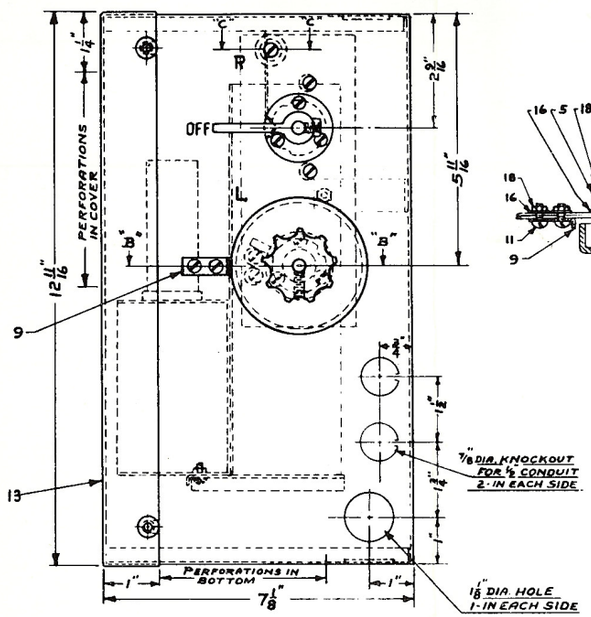

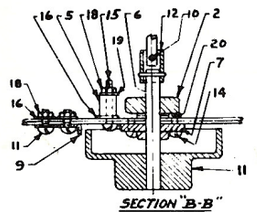

UNLESS OTHERWISE SPECIFIED
DECIMAL DIMENSIONS ± .005"
FRACTIONAL DIMENSIONS ± 1/64"
ANGULAR DIMENSIONS ± 1°

CHANGES
ISSUE NO. 1

PART LIST			
ITEM	NAME	PART NO.	REQ
1	CHANGEOVER LEVER	PA-2500	2
2	DETENT STOP	PA-2501	2
3	DETENT SPRING	PA-2502	1
4	DETENT SPRING HOLDER	PA-2503	1
5	ECCENTRIC STOP BUSHING	PA-2504	4
6	CONTROL ROD	PA-2505	2
7	CHANGE OVER & FADER ROD BEARING	PA-2507	2
8	BEARING BRACKET	PA-2508	1
9	CONTROL KNOB POINTER	PA-2509	1
10	CONTROL ROD COUPLING STUD	PA-2555	2
11	FADER CONTROL KNOB ASSEMBLY	PA-7004	2
12	CONTROL ROD COUPLING ASSEMBLY	PA-7014	2
13	PA-7015 PREAMPLIFIER & CONTROL CABINET	PA-7015	1
14	10-32 x 5/16" R.H.I.M.S.		11
15	10-32 x 1" R.H.I.M.S.		5
16	NO. 1210 SHAKEPROOF LOCKWASHER		6
17	¼"-20 x ⅜" ALLEN HDLESS SET SCREW		4
18	10-32 HEX. I NUT		10
19	NO. 10 STEEL WASHER		8
20	5/16" FLAT STEEL WASHER		4
21	NO. 1222 SHAKEPROOF LOCK WASHER		1
22	¼" ALLEN SET SCREW WRENCH (NOT SHOWN)		1

DO NOT SCALE DRAWING

TITLE
ASSEMBLY, PA-7015 CABINET AND PA-7016 AUXILIARY CONTROLS

MATERIAL	FINISH		
DRAWN H.M.C.	CHKD.	APPVD.	DATE

DRWG. NO. LPA-7025

MOTIOGRAPH
CHICAGO, ILL.

WE-7517

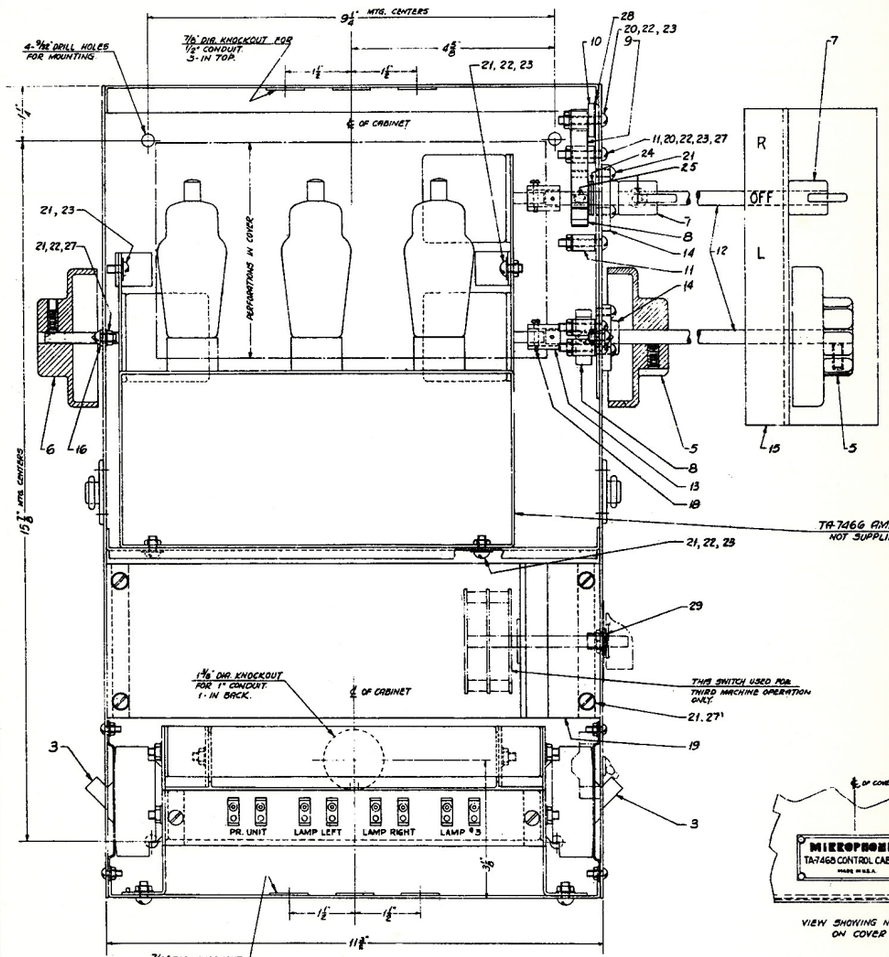

FRONT VIEW WITH COVER REMOVED.

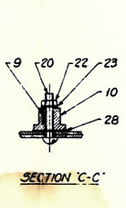

VIEW SHOWING NAMEPLATE ON COVER

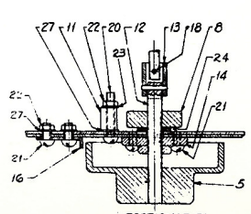

SECTION 'B-B'

SECTION 'C-C'

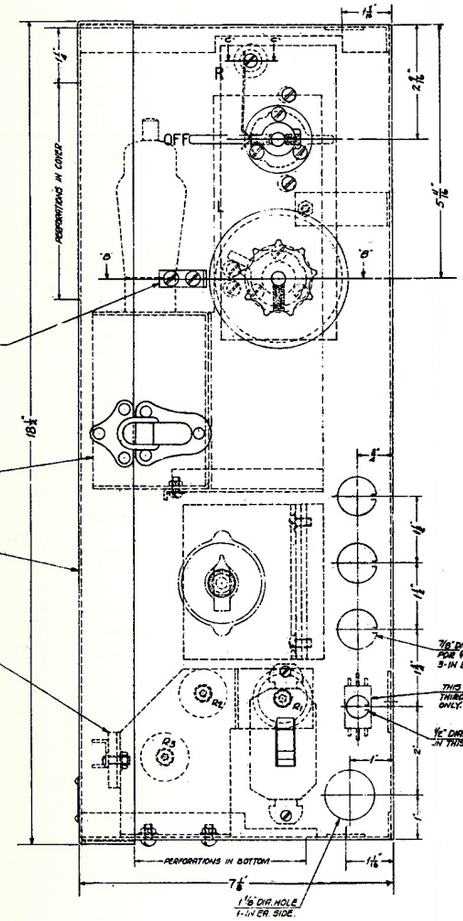

		ITEM	NAME
		35	
		34	
		33	
		32	
		31	
1		30	WRENCH FOR ⅛" ALLEN HOLLOW SET SCREW
1		29	#4580 CINCH ST. PLUG BUTTON (MOUNTING PLATE)
1		28	#1122 SHAKEPROOF LOCKWASHER
12		27	#1810 SHAKEPROOF LOCKWASHER
		26	
4		25	¼-20 × ⅜ ALLEN HOLLOW HD. SET SCREW
4		24	⅜ STD STEEL WASHER, N.P.
9		23	#10(.190) STD STEEL WASHER
12		22	#10(.190)-32 HEX. I. NUT (NICKEL PLATE)
14		21	#10(.190)-32 × ⅜" R.H.M.S.
5		20	#10(.190)-32 × 1" R.H.M.S.
1	PA-7003	19	PANEL (SEE NOTE 2)
2	PA-2255	18	CONTROL ROD COUPLING STUD
		17	
2	PA-1509	16	FADER CONTROL POINTER
1	PA-1508	15	CONTROL BEARING BRACKET
2	PA-1507	14	CONTROL ROD AND FADER BEARING
2	PA-7014	13	CONTROL ROD COUPLING ASS'Y.
2	PA-2505	12	CABINET CONTROL ROD
4	PA-2504	11	ECCENTRIC STOP
1	PA-2503	10	DETENT SPRING HOLDER
1	PA-2502	9	DETENT SPRING
2	PA-2501	8	DETENT STOP
2	PA-1510	7	CHANGE OVER LEVER
1	PA-7008	6	L.H. FADER CONTROL KNOB
2	PA-7009	5	R.H. FADER CONTROL KNOB
REQ.	PIECE	ITEM	NAME

STOCK LIST FOR TA-7469 AUXILIARY CONTROL

NOTE:
1. RESISTORS INCLUDED IN ITEM 2, ARE AS FOLLOWS:
R1 - W.L. 6% L 4.12 Δ DUPLEX VITROHM RESISTOR IN STEPS OF 2.06Δ - 2.06Δ ± 2% TYPE 202 TERMINALS
R2 R3 R4 R5 W.L. 32.94Δ VITROHM RESISTOR IN STEPS OF GREEN - 20.4Δ - 8.2Δ - 8.24Δ ± 2% GREEN CHANNEL WITH TYPE 203 TERMINALS.
2. ITEM 19 AND SWITCHES FOR THIRD MACHINE OPERATION SUPPLIED ONLY WHEN ORDERED.

STOCK LIST FOR TA-7468 CONTROL CABINET

REQ.	PIECE	ITEM	NAME
1	PA-7000	1	CABINET ASSEMBLY
1	PA-7002	2	RESISTOR MTG. BRACKET ASSEMBLY (SEE NOTE 1)
2	PA-2324	3	HEX HEAD 8-32 S.P. KLUM TUMBLER SW. PORCELAIN BASE

TA-7468 CONT. CAB. WITH TA-7469 AUX. CONTROLS ASSEMBLY

DRWG. NO. WE-7517.

PHOTOGRAPH INC. CHICAGO ILL.

PRINTED IN U.S.A.

5150.14

PA-7500 (TA-7468)
Control Cabinet

ALTEC SERVICE CORPORATION
MOTIOGRAPH-MIRROPHONIC SOUND SYSTEM

WE 750S.

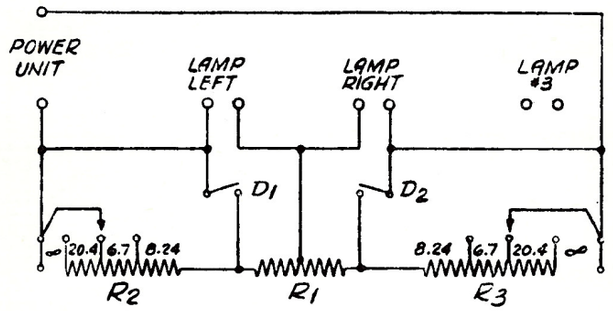

DESIG.	APPARATUS
R1	W.L. 6½"L., 4.12Ω RIBFLEX VITROHM RESISTOR IN STEPS OF 2.06Ω-2.06Ω ±5% TYPE 202 TERMINALS.
R2 & R3	W.L. 8½"L., 35.34Ω VITROHM RESISTOR IN STEPS OF, OPEN-20.4Ω-6.7Ω-8.24Ω ±5% GREEN ENAMEL WITH TYPE 209 TERMINALS.
D1 & D2	H&H #8601 FLUSH TUMBLER SWITCH PORCELAIN BASE WITH BLACK HANDLE

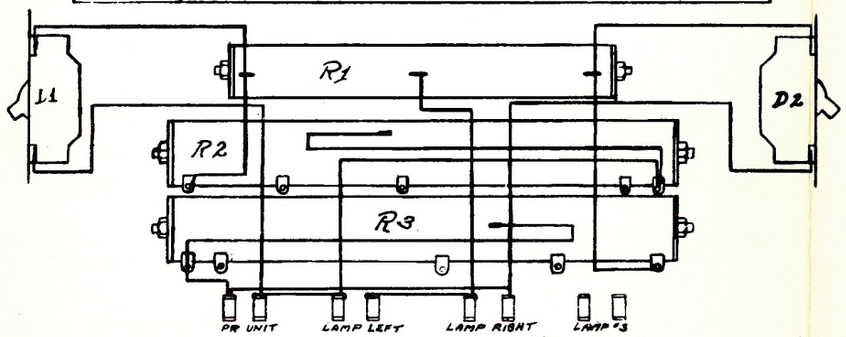

INTERNAL WIRING IS #16 BLACK STRANDED LENZITE, 8FT REQ'D.

DWG. SAME AS E.P.A. ASP-8302 ISSUE 3. E.P.A. 10-10-39.
ISSUE 1. WIRING DIAGRAM ADDED
ISSUE 2. 9/8/41

PA-7500 (TA-7468) CONTROL CABINET
SCHEMATIC AND WIRING DIAGRAM

MOTIOGRAPH INC. CHICAGO ILL.
W.E-7505
PRINTED IN U.S.A.

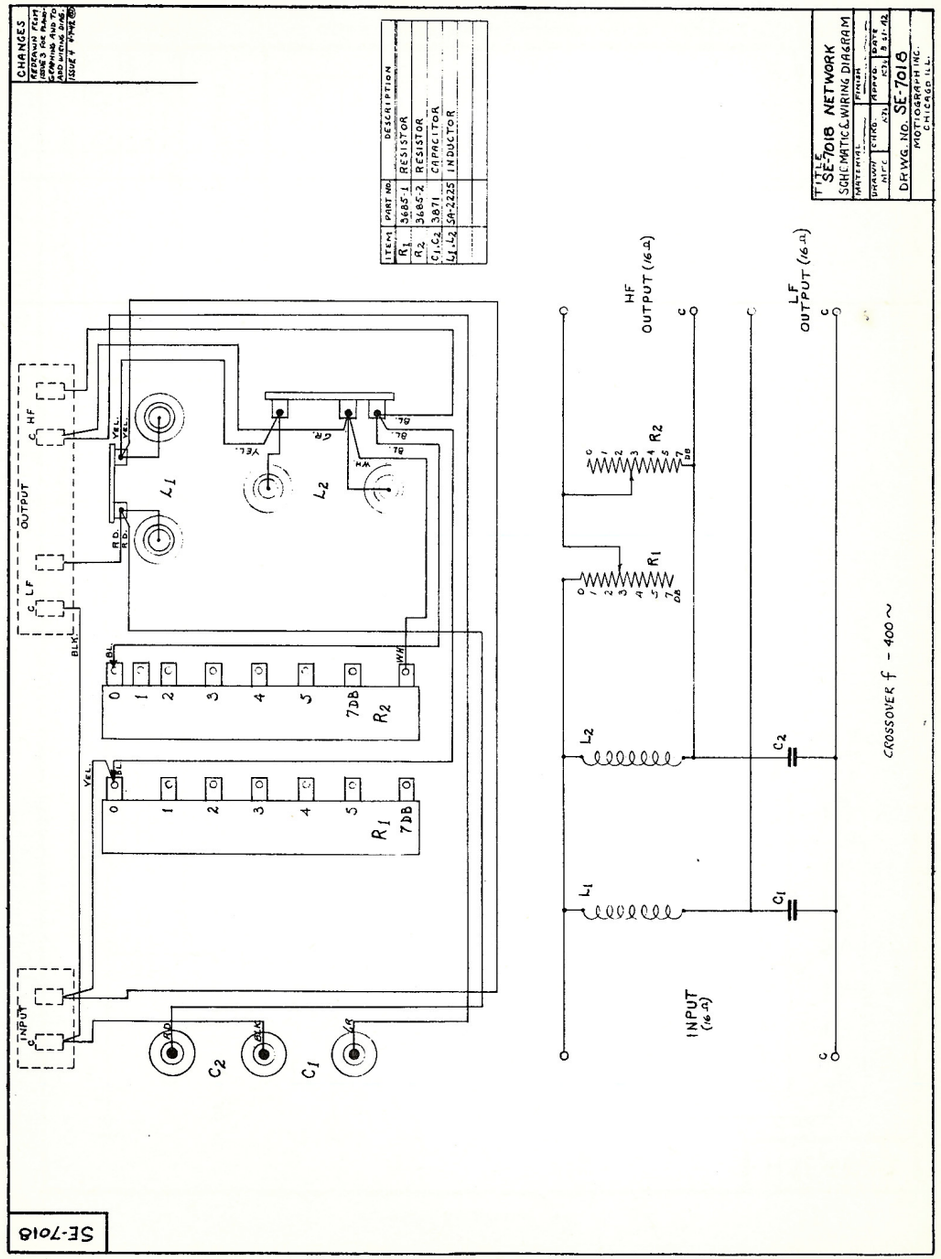
CHANGES
TITLE
SE-7018 NETWORK
SCHEMATIC & WIRING DIAGRAM
DRWG. NO. SE-7018
MOTIOGRAPH INC.
CHICAGO ILL.
ITEM
PART NO.
DESCRIPTION
R1 3685-1 RESISTOR
R2 3685-2 RESISTOR
C1, C2 3871 CAPACITOR
L1, L2 SA-2225 INDUCTOR
OUTPUT
INPUT
HF OUTPUT (16Ω)
LF OUTPUT (16Ω)
INPUT (16Ω)
CROSSOVER f - 400~
SE-7018

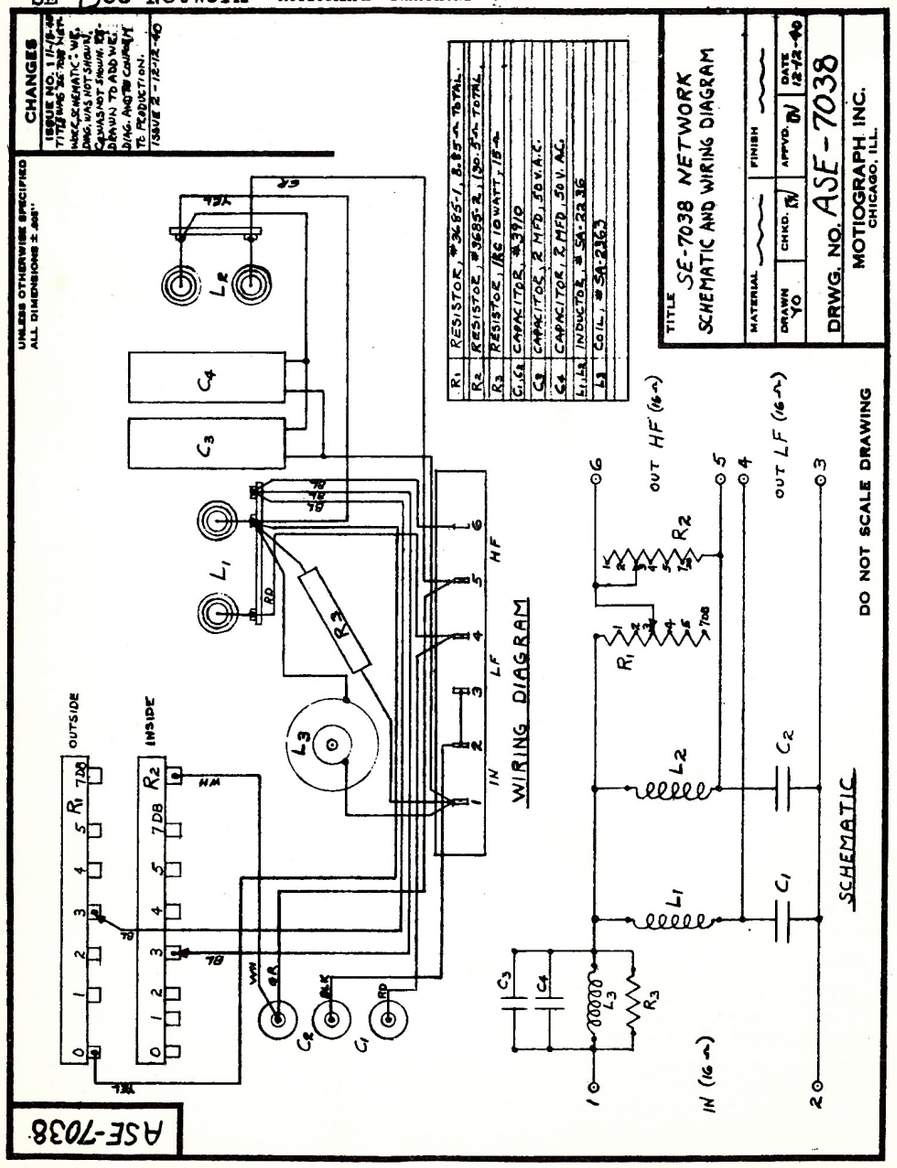
CHANGES
ISSUE NO. 1 11-13-40
TITLE WAS SE-7038 NETWORK, SCHEMATIC WE DWG. WAS NOT SHOWN, CAPACITOR WAS NOT SHOWN. REDRAWN TO ADD WE DIAG. AND TO CONFORM TO PRODUCTION.
ISSUE 2 - 12-12-40
UNLESS OTHERWISE SPECIFIED ALL DIMENSIONS ± .005"
R1 RESISTOR, #3685-1, 8.85Ω TOTAL.
R2 RESISTOR, #3685-2, 130.5Ω TOTAL.
R3 RESISTOR, 1KC 10 WATT, 15Ω
C1,C2 CAPACITOR, #3910
C3 CAPACITOR, 2 MFD, 50 V.A.C.
C4 CAPACITOR, 2 MFD, 50 V.A.C.
L1,L2 INDUCTOR, #SA-2236
L3 COIL, #SA-2363
TITLE SE-7038 NETWORK SCHEMATIC AND WIRING DIAGRAM
MATERIAL
FINISH
DRAWN YO
CHKD.
APPVD.
DATE 12-12-40
DRWG. NO. ASE-7038
MOTIOGRAPH, INC. CHICAGO, ILL.
OUTSIDE
INSIDE
WIRING DIAGRAM
IN
LF
HF
OUT HF (16Ω)
OUT LF (16Ω)
IN (16Ω)
SCHEMATIC
DO NOT SCALE DRAWING
ASE-7038

TA-7473 Network — ALTEC SERVICE CORPORATION — TA-7473 Network

WE-7503.

DWG. SAME AS ERR. ASL-13416 ISSUE 1. EAK. 10-10-38
ISSUE 2. REVISED TO AGREE WITH ASL-13416-B. ATTENUATOR NOTE AND NOTE 2 ADDED. ISSUE 2 6-14-40 EAK.

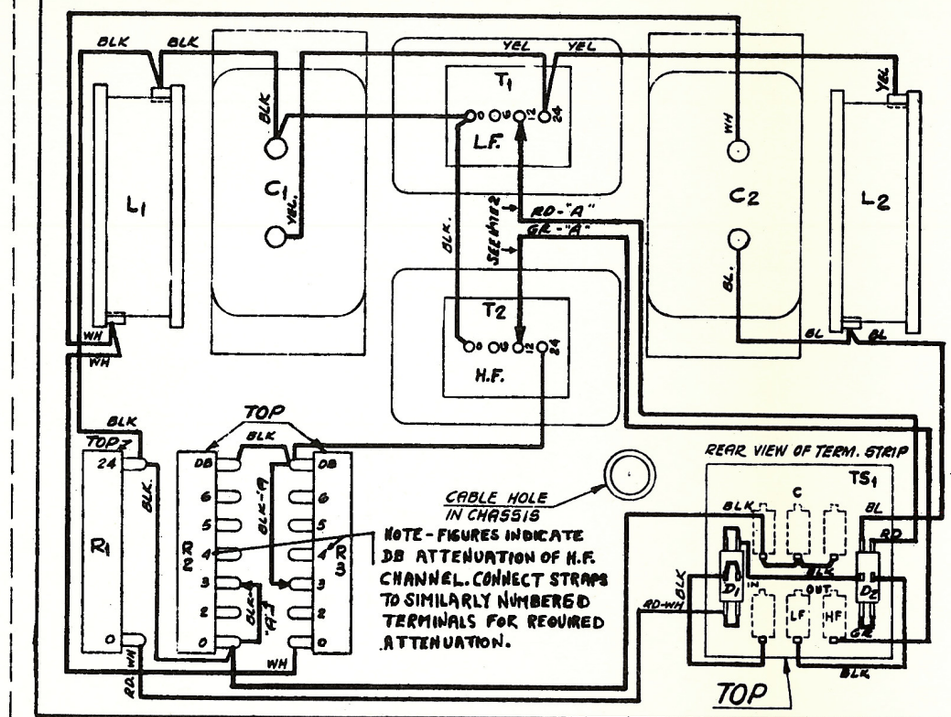

DESIG.	APPARATUS
C1, C2	TA-4209 CONDENSER
L1, L2	RETARD COIL PER ASA-1416
R1	RESISTOR PER ⑫ A50-6887
R2	RESISTOR PER ⑥ A50-6887
R3	RESISTOR PER ⑦ A50-6887
T1, T2	TA-4208 TRANSFORMER
TS1	TERM. STRIP PER ⑭ ASL-13418

NOTE:
1. ALL WIRES TO BE #16 A.W. GA. SOLID WIRE PER K5-7612, EXCEPT WIRES MARKED "A" WHICH ARE FLEXIBLE WIRE PER K5-7612.
2. CONNECT CHANNEL OUTPUT TAPS AS INDICATED IN SYSTEM SCHEMATIC.

PRINTED IN U.S.A.

TA-7473 NETWORK

TRIMMING LINE

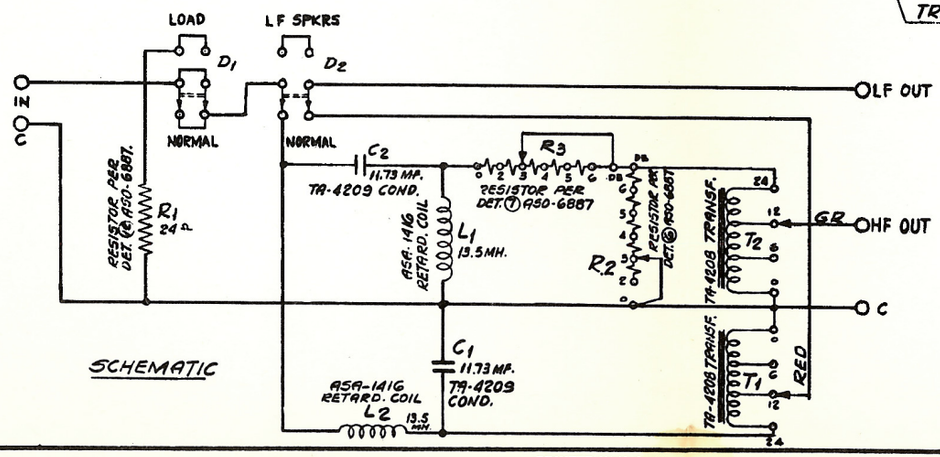

SCHEMATIC

TITLE	TA-7473 NETWORK 400~ DIVIDING NETWORK SCHEMATIC & CCT. LABEL
MATL.	FINISH
DR.	CK. APPVD EAK. DATE 10-10-38.
DRWG. NO.	WE-7503
	MOTIOGRAPH INC. CHICAGO, ILL.

PRINTED IN U. S. A.

1. COMPONENTS AND CHARACTERISTICS

1.1 SE-7038 Network

Crossover frequency	800 cycles
Input impedance	16 ohms
H. F. Output impedance	16 ohms
L. F. Output impedance	16 ohms
H. F. Channel Attenuator	7 db "L" pad
Schematic and Wiring Diagram	ASE-7038
Terminals	Solder type, inside chassis
Overall dimensions	13-1/2" L. x 5-1/2" W. x 7" H.
Weight	9-1/2 lbs.
Finish	Dull black lacquer

1.2 SE-7037 Baffle Assembly

Material	Wood and plywood
Overall dimensions	6'-1 5/8" H. x 8'-3 1/2" W. x 16 7/8" D.
Weight	200 lbs.
Dimensions, bass reflex section	35-1/2" H. x 27-1/2" W. x 16" D. (outside)
Speaker Unit required	(1) 18"
Finish	Flat black casein paint

1.3 SE-7034 L. F. Loudspeaker Unit

Type	18" Electro-dynamic cone
Field Winding, rating	24 volts, 33 watts
Voice Coil impedance	16 ohms at 400 cycles
Terminals	Screw and solder lugs
Overall dimensions	17-7/8" dia. x 10-5/16" D. Mounting bolt circle, 8-17/32" dia. 8 holes 9/32" dia.
Weight	51 lbs.
Finish	Dull black lacquer

1.4 SE-7015 H. F. Loudspeaker Unit

Type	Metal diaphragm, electro-dynamic
Field Winding, rating	24 volts, 20 watts
Voice Coil impedance	16 ohms at 600 cycles
Terminals	Screw and solder lugs
Overall dimensions	7" dia. x 9-3/8" deep (over horn mounting studs)
Weight	21 lbs., 11 oz.
Finish	Dull black lacquer

1.5 SE-7029 H. F. Horn

Type	5 cell, die-cast metal
Mounting	Fits studs on SE-7015 H. F. Unit. Requires SE-7033 Supporting and Tilting Brackets
Finish	Dull black lacquer
Dimensions	15-1/2" W. x 9-9/16" H. x 10-5/8" D.
Weight	13-1/2 lbs.
Distribution	Covers solid angle 45° (vert.) x 90° (horiz.)
Frequency Range	Suitable for 800 cycle crossover systems

1.6 General - The overall dimensions of the assembled SE-7508 Loudspeaker System are 8' 3-1/2" W. x 7' 1-1/2" H. x 18" D. Weight 300 lbs. Sufficient working space (preferably at least 18") should be available at the back of the bass-reflex section of the baffle to permit access to the L.F. Loudspeaker Unit. The loudspeaker system will safely and with low distortion handle up to 25 watts. An external source of D.C., approximately 2 amperes at 24 volts is required for field supply.

2. INSTALLATION

2.1 Assemble the bass-reflex and wing section of the SE-7037 Baffle Assembly per sketch, using the carriage bolts, washers and nuts provided. Use the long (3 x 4) brace with the counterbored holes on the bottom so the complete assembly will rest solidly on the stage floor. The H.F. horn shelf is made in two sections to facilitate phasing. Nail the section with the cleat to the top center wing section of the baffle with cleat to the rear and facing down, and with the edge opposite the cleat flush with the front surface of the baffle. Insert the angle brace between cleat and rear baffle surface and firmly nail it in place.

2.2 Assemble the H.F. Speaker Unit (SE-7015) to the Cellular Horn (SE-7029) and mount the complete

assembly on the remaining horn shelf section, using the SE-7033 Supporting and Tilting Brackets provided. Locate the angle brackets supporting the horn corners near the edge of the shelf so the curved horn mouth will project beyond the edge slightly. Locate the center tilt bracket so as to give the maximum range of tilt. Make certain that the dust cover plate is removed from the high frequency unit before it is bolted to the horn throat.

2.3 Place the assembled L.F. Baffle behind the screen with the front baffle surface as close as possible to the rear screen surface. If screen masking covers the bass-reflex or L.F. Speaker openings, it should not be of heavier material than black scrim cloth. The crossover frequency of the loudspeaker system is 800 cycles, and an appreciable amount of speech energy therefore comes from the L.F. Speaker Unit.

2.4 Place the H.F. Speaker Assembly on the shelf section nailed to the top of the baffle. Slide the assembly so the front edge of the horn mouth is about two inches ahead of the front baffle surface at zero tilt. Then tilt the horn so as to give even distribution of H.F. sound over the auditorium seating area. The nominal coverage of the H.F. Horn is approximately 90° horizontally and 45° vertically. Outside the corresponding solid angle the H.F. coverage diminishes gradually but not sufficiently to require extra horns except in extremely wide or high auditoriums. Final adjustment of tilt and longitudinal positioning of the H.F. Speaker Assembly **for correct phasing** are discussed in section 3.2. Do not fasten the two shelf sections together until these adjustments are completed.

2.5 Remove the rear cover of the bass-reflex section and mount the 18" L.F. Speaker Unit (SE-7034). Handle the unit with care so as to avoid damaging the cone with the mounting bolts.

2.6 The network may be fastened to the baffle in any convenient position, or it may be mounted in a suitable cabinet on the stage wall if local regulations or stage conditions require such protection. In locations where the loudspeaker equipment is never disturbed, it is suggested that the network be placed on a small pad of Ozite, or other soft material, placed on top of the baffle bass-reflex section.

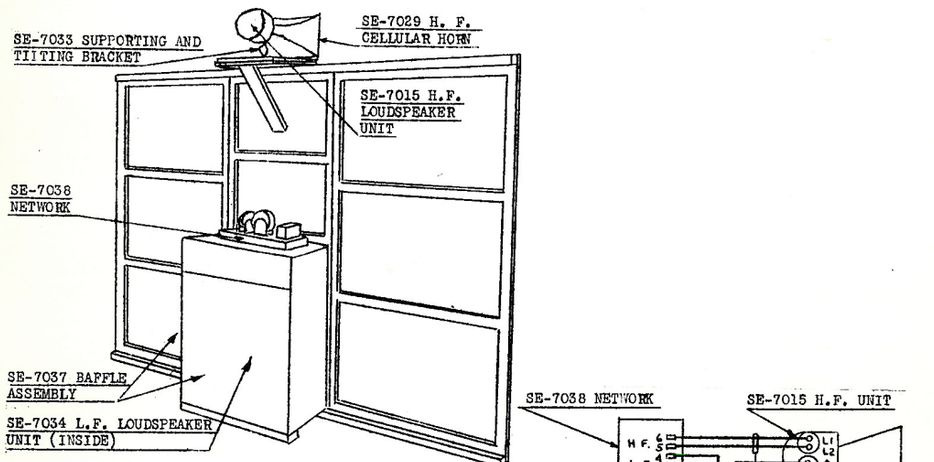

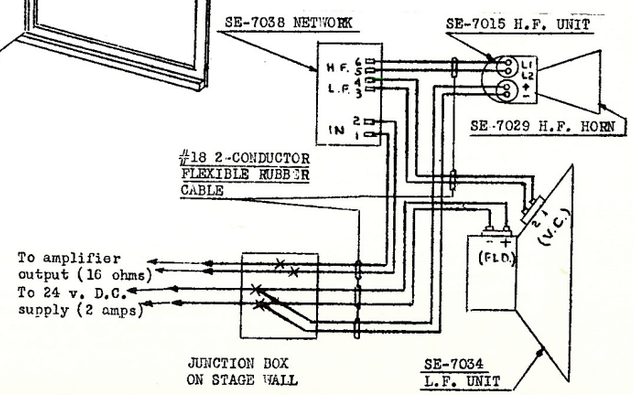

Issued by
Engineering Department
Printed in U. S. A.

3. OPERATION AND ADJUSTMENTS

3.1 The acoustical energy output of the H.F. Channel is made purposely higher than, and adjustable with, respect to that from the L.F. Channel in order to permit good balancing under all screen and auditorium acoustical conditions. It is varied by connecting the two blue strap wires underneath the network chassis to similarly numbered terminals of the two tapped attenuator resistors. The numbers indicate the amount of attenuation in db. For an auditorium of average acoustical properties, and assuming that the sound picture screen is in good condition for the transmission of sound through its perforations, the attenuation will need to be in the order of 3 db.

3.2 For best quality sound, the longitudinal position of the H.F. Speaker Assembly with respect to the L.F. Speaker must be adjusted so that the acoustical energy output of the H.F. and L.F. Channels will be "in phase", that is, will add, and not cancel in the crossover frequency region. This operation should be performed before final amplifier equalization is undertaken since it affects the apparent sound quality. There are numerous phasing methods in use. One which gives consistent results is as follows:- The H.F. Horn Assembly is first properly tilted to give even distribution of sound energy throughout the auditorium as evidenced by listening tests. A reel containing fairly heavy male dialogue is then run. An observer in the auditorium is asked to note when the largest difference in sound quality is noted as the voice coil leads to the H.F. Speaker Unit are reversed for various longitudinal positions of the H.F. Speaker Assembly with respect to the L.F. Baffle. With network and speaker connections made in accordance with the connection diagram, and with average horn tilt, the position noted in section 2.4 is approximately correct, but variations in tilt, speaker units, network characteristics, etc., make it well worth while to actually check for correct phasing. Once the point of maximum difference in sound quality is determined, even an untrained observer will be able to tell which voice coil connection gives best quality.

3.3 Unless the stage volume is very small, or is fairly well filled with drapes, scenery, etc., better auditorium sound quality will usually be secured by an approximate acoustic isolation between stage and auditorium except for the horn mouth and baffle face. The isolating material may consist of heavy drapes, wall board, old scenery, etc., arranged to close off the back of the screen (except for horn mouth and speaker openings), as well as possible, and to extend to the sides of the proscenium arch. If there is considerable stage apron space in front of the screen, it may be necessary to cover it with carpet or other sound absorbing material to reduce sound reflections.

4. MAINTENANCE

4.1 In the event of complete failure of a H.F. Unit, reasonably satisfactory emergency operation can be obtained by connecting the entire amplifier output to the SE-7034 L.F. Loudspeaker Unit, by removing the wires going to the network input terminals (1 and 2), and splicing them to the wires removed from the network L.F. output terminals (3 and 4).

5. REPLACEMENT PARTS

5.1 The cone and voice coil of the SE-7034 L.F. Loudspeaker Unit may be ordered as "SA-2351-4 Cone and Voice Coil for SE-7034 L.F. Loudspeaker Unit". The diaphragm and field coil of the SE-7015 H.F. Loudspeaker Unit cannot be satisfactorily replaced in the field. Replacement units are available on a repair basis.

Issued by
Engineering Department
Printed in U. S. A.

1. COMPONENTS AND CHARACTERISTICS

1.1 SE-7018 Network

Crossover Frequency	400 cycles
Input impedance	16 ohms
H.F. Output impedance	16 ohms
L.F. Output impedance	16 ohms
H.F. Channel Attenuator	7 db "L" pad
Schematic & Wiring Diagram	ASE-7018
Terminals	Screw and solder lugs on terminal strips
Overal dimensions	14-1/2" L. x 10-1/16" W. x 8" H.
Weight	17-1/2 lbs.
Finish	Dull black lacquer

1.2 SE-7019-A Folded L.F. Horn

Material	Wood and plywood
Overall dimensions	85-5/8" H. (or W.) x 32" D. x 41-5/8" W. (or H.)
Weight	260 lbs.
Speaker Units required	(2) 15" (SE-7020)
Mounting position	Long dimension vertical or horizontal. (SE-7019 Type can be mounted only with long dimension horizontal)
Finish	Flat black casein paint

1.3 SE-7020 L.F. Loudspeaker Unit

Type	15" Electro-dynamic cone
Field Winding, rating	24 volts, 17 watts
Voice Coil impedance	32 ohms at 400 cycles
Terminals	Screw and solder lugs
Overall dimensions	15-1/8" dia. x 8-17/32" D. Mounting bolt circle, 7-9/32". 8 holes 17/64" dia.
Weight	16 lbs.
Finish	Dull black lacquer

1.4 SE-7015 H.F. Loudspeaker Unit

Type	Metal diaphragm, electro-dynamic
Field Winding, rating	24 volts, 20 watts
Voice Coil impedance	16 ohms at 600 cycles
Terminals	Screw and solder lugs
Overall dimensions	7" dia. x 9-3/8" D. (over horn mounting studs)
Weight	21 lbs., 11 oz.
Finish	Dull black lacquer

1.5 SE-7017 Horn Throat

Material	Die-cast zinc alloy
Dimensions	14-5/8" L. x 4-1/2" dia. at small end x 5-5/16" sq. at large end.
Weight	9 lbs.
Function	Couples one SE-7015 H.F. Loudspeaker Unit to SE-7016 Horn
Finish	Dull black lacquer

1.6 SE-7016 H.F. Cellular Horn (32 cell)

Material	Die-cast zinc alloy exponential cells bolted together and into a cast throat
Dimensions	30-1/2" W. x 16" H. x 22-3/4" L.
Weight	72 lbs.
Distribution	Covers solid angle 45° (vert.) x 90° (horiz.)
Frequency Range	Suitable for 400 cycle crossover systems
Finish	Dull black lacquer

1.7 SE-7057 Sled for H.F. Horn Assembly

Material	Angle iron, miscellaneous hardware
Function	Supports SE-7016 Horn, SE-7017 Horn Throat, and SE-7015 Loud-Speaker Unit. Provides turn-buckle tilt adjustment.
Weight	9 lb.
Finish	Dull black lacquer

Issued by
Engineering Department
Printed in U. S. A.

1.8 General - The overall dimensions of the assembled SE-7511 Loudspeaker System with SE-7019-A Folded L.F. Horn longest dimension vertical are 8' 10" H. x 3' 5-5/8" W. x 45-1/2" D. With the longest dimension horizontal the dimensions are 60" H. x 85-5/8" W. x 45-1/2" D. The total weight is approx. 425 lbs. Sufficient working space (preferably at least 18") should be available at the back of the SE-7019-A Folded L.F. Horn, to permit access to its speaker unit and network compartment. The loudspeaker system will safely and with low distortion handle 20 watts. An external source of DC., of approx. 2.4 amperes at 24 volts is required for field supply.

2. INSTALLATION

2.1 The SE-7019-A Folded L.F. Horn, is designed to allow for mounting with the longer dimension either horizontal or vertical. The efficiency (ratio of total acoustical output energy to electrical input energy) is slightly greater with the longer dimension horizontal and with the horn resting solidly on the stage floor. The angular distribution of energy is wider and more even, however, about the long axis of the horn, and this consideration therefore, in an auditorium of the usual proportions, would call for having the longer dimension vertical. For high houses with one or more balconies, better results will usually be secured by having the longer dimension horizontal. Experience indicates that in such cases, best H.F. Horn coverage is secured by having the H.F. Speaker System fairly well down on the screen, in fact, resting on the L.F. Horn. In this position it is close enough to main floor front seats to provide plenty of direct sound energy even though the H.F. Horn Assembly is tilted upward a considerable amount to give direct sound energy to upper balcony seats.

2.2 Remove the wing nuts and washers securing the rear cover of the L.F. Horn Speaker Compartment and take off the cover. Mount the two L.F. Speaker Units, taking care that cones are not damaged by accidental contact with mounting bolts; this operation is most easily and safely performed with the L.F. Horn resting face downward on the floor, provided space permits. Mount the network to the support blocks in the speaker compartment with the wood screws and washers provided. Assemble the H.F. Horn, Throat, and Unit, and rig the assembly on the support sled. The sled members go together with the tapping projections upward so the bottom surface of the sled will be smooth and hence free to slide on the L.F. Horn surface supporting it for phasing operations. The sketch shows the assembled relationship of the various components for the vertical L.F. Horn position

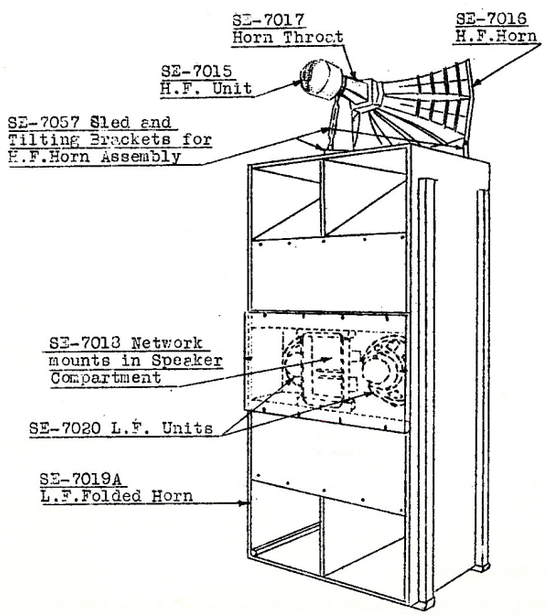

2.3 Make connections to the network and the loudspeaker units in accordance with the following sketch, or, where the loudspeaker system is part of a standard sound system, in accordance with the sound system conduit and connection diagrams. If there is doubt as to final L.F. Horn position, leave sufficient slack in connection cords to allow it to be turned about.

Issued by
Engineering Department
Printed in U. S. A.

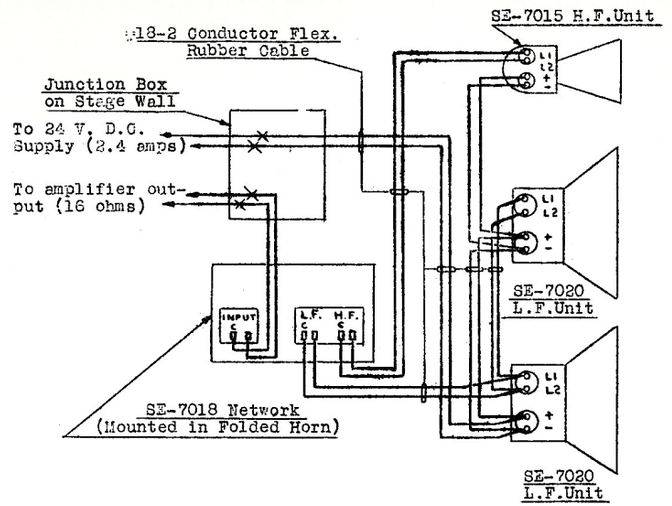

3. OPERATION AND ADJUSTMENTS

3.1 The acoustical energy output of the H.F. Channel is purposely made higher than and adjustable with respect to that from the L.F. Channel in order to permit good balancing under all screen and auditorium acoustical conditions. It is varied by connecting the two blue strap wires inside the network chassis to similarly numbered terminals of the two tapped attenuator resistors. The numbers indicate the amount of attenuation in db. For an auditorium of average acoustical properties, and assuming that the sound picture screen is in good condition for the transmission of sound through its perforations, the attenuation will need to be in the order of 2 db.

3.2 For best quality sound, the longitudinal position of the H.F. Speaker Assembly with respect to the L.F. Speaker must be adjusted so that the acoustical energy output of the H.F. and L.F. Channels will be "in phase", that is, will add, and not cancel in the crossover frequency region. This operation should be performed before final amplifier equalization is undertaken since it affects the apparent sound quality. There are numerous phasing methods in use. One which gives consistent results is as follows. The H.F. Horn Assembly is first properly tilted to give even distribution of sound energy throughout the auditorium as evidenced by listening tests. A reel containing fairly heavy male dialogue is then run. An observer in the auditorium is asked to note when the largest difference in sound quality is noted as the voice coil leads to the H.F. Speaker Unit are reversed for various longitudinal positions of the H.F. Speaker Assembly with respect to the L.F. Horn. Once the point of maximum difference in sound quality is determined, even an untrained observer will be able to tell which voice coil connection gives best quality. Phasing will be found less critical when the L.F. Horn is vertical due to its resulting smoother response in the crossover frequency region. If the phasing point comes where the face of the H.F. Horn Assembly is more than a few inches from the screen another equally good point can be found by changing the relative horn position approx. 16", to bring the H.F. Horn mouth ahead of the face of the L.F. Horn; at the same time reversing the H.F. Unit voice coil leads. The L.F. Horn face need not be close to the screen surface, but as has been previously pointed out, the H.F. Horn mouth should be, for reduction of sound reflections from the rear screen surface.

3.3 Unless the stage volume is very small, or is fairly well filled with drapes, scenery, etc., better auditorium sound quality will usually be secured by an approximate acoustic isolation between stage and auditorium except for the horn mouths. The isolating material may consist of heavy drapes, wall board, old scenery, etc., arranged to close off the back of the screen (except for horn mouths) as well as possible, and to extend to the sides of the proscenium arch. If there is considerable stage apron space in front of the screen, it may be necessary to cover it with carpet or other sound absorbing material to reduce sound reflections.

4. MAINTENANCE

4.1 In the event of complete failure of a H.F. Unit, emergency operation can be obtained by connecting

the entire amplifier output to the two L.F. Speaker Units, by removing the wires going to the network input terminals and splicing them to the wires removed from the network L.F. output terminals.

5. REPLACEMENT PARTS

5.1 The cone and voice coil of the SE-7020 L.F. Loudspeaker Unit, may be ordered as "SA-1999-4 Cone and Voice Coil for SE-7020 L.F. Loudspeaker Unit." The diaphragm and field coil of the SE-7015 H.F. Loudspeaker Unit cannot be satisfactorily replaced in the field. Replacement units are available on a repair basis.

Issued by
Engineering Department
Printed in U. S. A.

1. COMPONENTS AND CHARACTERISTICS

1.1 SE-7018 Network

Crossover Frequency	400 cycles
Input Impedance	16 ohms
H. F. Output Impedance	16 ohms
L. F. Output Impedance	16 ohms
H. F. Channel Attenuator	7 db "L" pad
Schematic & Wiring Diagram	ASE-7018
Terminals	Screw and solder lugs on terminal strips
Overall Dimensions	14⅛" L.X 10-1/16" W. X 8" H.
Weight	17½ lbs.
Finish	Dull black lacquer

1.2 SE-7019-A Folded L. F. Horn

Material	Wood and plywood
Overall Dimensions	85-5/8" H. (or W.) X 32" D. X 41-5/8" W. (or H.)
Weight	260 lbs.
Speaker Units required	(2) 15" (SE-7020)
Mounting Position	Long dimension vertical or horizontal (SE-7019 type can be mounted only with long dimension horizontal.)
Finish	Flat black casein paint

1.3 SE-7020 L. F. Loudspeaker Unit

Type	15" Electro-dynamic cone
Field winding rating	24 V., 17 watts
Voice coil impedance	32 ohms at 400 cycles
Terminals	Screw and solder lugs
Overall Dimensions	15-1/8" dia. X 8-17/32" deep. Mounting bolt circle, 7-9/32"; 8 holes 17/64" dia.
Weight	16 lbs.
Finish	Dull black lacquer

1.4 SE-7015 H. F. Loudspeaker Unit

Type	Metal diaphragm, electro-dynamic
Field Winding rating	24 V., 20 watts
Voice Coil Impedance	16 ohms at 600 cycles
Terminals	Screw and solder lugs
Overall Dimensions	7" dia. X 9-3/8" deep (over horn mounting studs)
Weight	21 lbs. 11 oz.
Finish	Dull black lacquer

1.5 SE-7039 H. F. Horn Double Throat

Material	Die-cast zinc alloy
Dimensions (overall)	11⅝" L. X 9¼" W.-Horn end 5-5/16" square-L. S. unit coupling faces 4⅛" dia.
Weight	5 lbs.
Function	Couples two SE-7015 H. F. Loudspeaker Units to SE-7016 H. F. Cellular Horn
Finish	Dull black lacquer

1.6 SE-7016 H. F. Cellular Horn (32 cell)

Material	Die cast zinc alloy exponential cells bolted together and into cast throat
Dimensions	30⅛" W. X 16" H. X 22-3/4" L.
Weight	72 lbs.
Distribution	Covers solid angle 45° (vert.) x 90° (horiz.)
Frequency Range	Suitable for 400 cycle crossover systems
Finish	Dull black lacquer

1.7 SE-7057 Sled for H. F. Horn Assembly

Material	Angle iron, miscellaneous hardware
Function	Supports SE-7016 Horn, SE-7039 Horn Throat, and SE-7015 Loudspeaker Units. Provides turn buckle tilt adjustment
Weight	9 lbs.
Finish	Dull black lacquer

Issued by
Engineering Department
Printed in U. S. A.

1.8 SE-7040 Impedance Matching Transformer

Type	Iron core, audio-frequency (300-8000 cycles) transformer in sheet metal case. Screw terminals with cover.
Dimensions	4-5/8 X 4-3/4 X 5-3/8" H.
Weight	6½ lbs.
Function	Matches two SE-7015 H. F. Loudspeaker Unit voice coils in parallel (8 ohms) to 16 ohms H. F. channel output of SE-7018 Network - 16 ohm terminals are numbers 3 and 5; 8 ohm terminals are numbers 3 and 4
Finish	Dull black lacquer

1.9 General - The overall dimensions of the assembled SE-7511 Loudspeaker system with SE-7019-A Folded L. F. horn longest dimension vertical are 8'-10" X 3'-5 5/8 W. X 40 3/4 D. With the longest dimension horizontal the dimensions are 60" H. X 85 5/8" W. X 40 3/4" D. The total weight is approximately 450 lbs. Sufficient working space (preferably at least 18") should be available at the back of the SE-7019-A Folded L. F. Horn to permit access to its speaker unit and network compartment. The loudspeaker system will safely and with low distortion handle up to 40 watts of amplifier output power. The input impedance is 16 ohms An external source of D. C., Approximately 3.0 amperes at 24 volts is required for field supply.

2. INSTALLATION

2.1 The SE-7019-A Folded L. F. Horn is designed to allow for mounting with the longer dimension either horizontal or vertical. The angular distribution of energy is wider and more even, however, about the long axis of the horn, and this consideration therefore, in an auditorium of the usual proportions, would call for having the longer dimension vertical. For high houses with one or more balconies, better results will usually be secured by having the longer dimension horizontal. Experience indicates that in such cases, best H. F. horn coverage is secured by having the H. F. speaker system fairly well down on the screen, in fact, resting on the L. F. horn. In this position it is close enough to main floor front seats to provide plenty of direct sound energy even though the H. F. horn assembly is tilted upward a considerable amount to give direct sound energy to upper balcony seats.

2.2 Remove the wing nuts and washers securing the rear cover of the L. F. horn speaker compartment and take off the cover. Mount the two L. F. speaker units taking care that cones are not damaged by accidental contact with mounting bolts; this operation is most easily and safely performed with the L. F. horn resting face downward on the floor, provided space permits. Mount the network to the support blocks in the speaker compartment with the wood screws and washers provided. The SE-7040 Impedance Matching Transformer may also be mounted in the speaker compartment if desired, or it may be located elsewhere on the SE-7019-A Folded L. F. Horn at any convenient point in the cable connections to the H. F. Loudspeaker Units. Assemble the H. F. horn, throat and units, and rig the assembly on the support sled. The sled members go together with the tapping projections upward so the bottom surface of the sled will be smooth and hence free to slide on the L. F. horn surface supporting it for phasing operations . The sketch shows the assembled relationship of the various components for the vertical L. F. horn position.

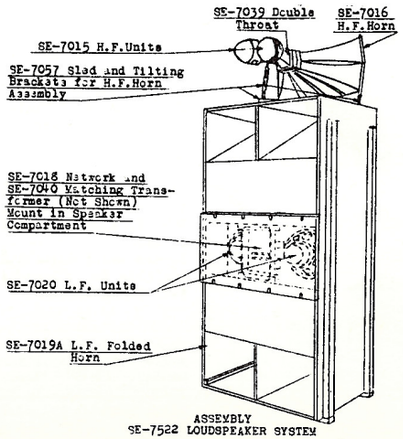

ASSEMBLY
SE-7522 LOUDSPEAKER SYSTEM

2.3 Make connections to the network, matching transformer, and the loudspeaker units in accordance with the following sketch, or, where the loudspeaker system is part of a standard sound system, in accordance with the sound system conduit and connection diagrams. If there is doubt as to final L. F. horn position (vertical or horizontal), leave sufficient slack in connection cables so that the position may be changed if desired.

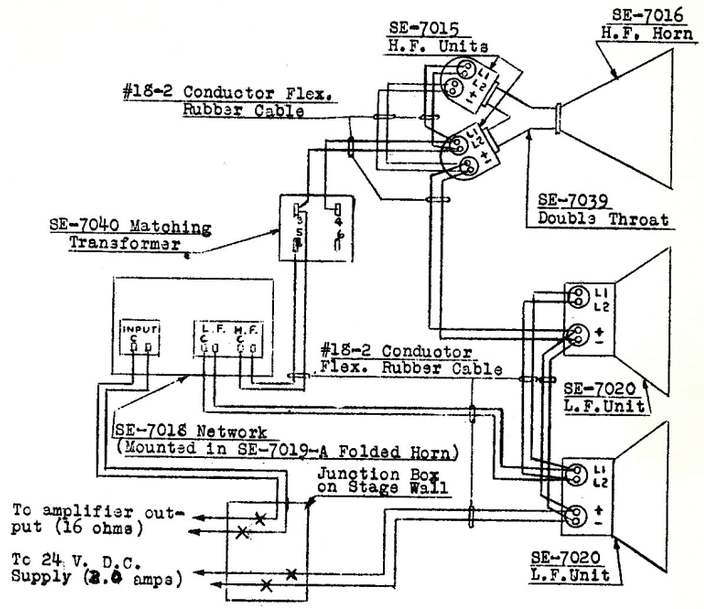

SE-7522 LOUDSPEAKER SYSTEM

3. OPERATION AND ADJUSTMENTS

3.1 The acoustical energy output of the H. F. channel is purposely made higher than and adjustable with respect to that from the L. F. channel in order to permit good balancing under all screen and auditorium acoustical conditions. It is varied by connecting the two blue strap wires inside the network chassis to similarly numbered terminals of the two tapped attenuator resistors. The numbers indicate the amount of attenuation in db. For an auditorium of average acoustical properties, and assuming that the sound picture screen is in good condition for the transmission of sound through its perforations, the attenuation will need to be in the order of 2 db.

3.2 For best quality sound, the longitudinal position of the H. F. speaker assembly with respect to the L. F. speaker must be adjusted so that the acoustical energy output of the H. F. and L. F. channels will be "in phase", that is, will add, and not cancel in the cross-over frequency region. This operation should be performed before final amplifier equalization is undertaken since it affects the apparent sound quality. There are numerous phasing methods in use. One which gives consistent results is as follows. The H. F. horn assembly is first properly tilted to give even distribution of sound energy throughout the auditorium as evidenced by listening tests. A reel containing fairly heavy male dialogue is then run. An observer in the auditorium is asked to note when the largest difference in sound quality is noted as the voice coil leads to the H. F. speaker unit are reversed for various longitudinal positions of the H. F. speaker assembly with respect to the L. F. baffle. Once the point of maximum difference in sound quality is determined, even an untrained observer will be able to tell which voice coil connection gives best quality. Phasing will be found less critical when the L. F. horn is vertical due to its resulting smoother response in the crossover frequency region. If the phasing point comes where the face of the H. F. horn assembly is more than a few inches from the screen, another equally good point can be found by changing the relative horn positions

approximately 16 inches (½ wavelength of sound at 400 cycles) to bring the H. F. horn mouth ahead of the face of the L. F. horn, at the same time reversing both H. F. unit voice coil leads. The L. F. horn face need not be close to the screen surface, but the H. F. horn mouth should be for reduction of sound reflections from the rear screen surface.

3.3 Unless the stage volume is very small, or is fairly well filled with drapes, scenery, etc., better auditorium sound quality will usually be secured by an approximate acoustic isolation between stage and auditorium except for the horn mouths. The isolating material may consist of heavy drapes, wall board, old scenery, etc. arranged to close off the back of the screen (except for horn mouths) as well as possible, and to extend to the sides of the proscenium arch. If there is considerable stage apron space in front of the screen, it may be necessary to cover it with carpet or other sound absorbing material to reduce sound reflections.

4. MAINTENANCE

4.1 In the event of complete failure of a H. F. unit, reasonably satisfactory emergency operation can be obtained by connecting the entire amplifier output to the SE-7034 L. F. Loudspeaker Unit by removing the wires going to the network input terminals (1 and 2) and splicing them to the wires removed from the network L. F. output terminals (3 and 4).

5. REPLACEMENT PARTS

5.1 The cone and voice coil of the SE-7020 L.F. Loudspeaker Unit may be ordered as "SA-1999-4 Cone & Voice Coil for SE-7020 L. F. Loudspeaker Unit". Replacement SE-7015 H. F. Loudspeaker Units are available on a repair basis. Diaphragms and field coils are <u>not</u> field replaceable.

Issued by
Engineering Department
Printed in U. S. A.

FRAMEWORK

LARGE WING

SMALL WING

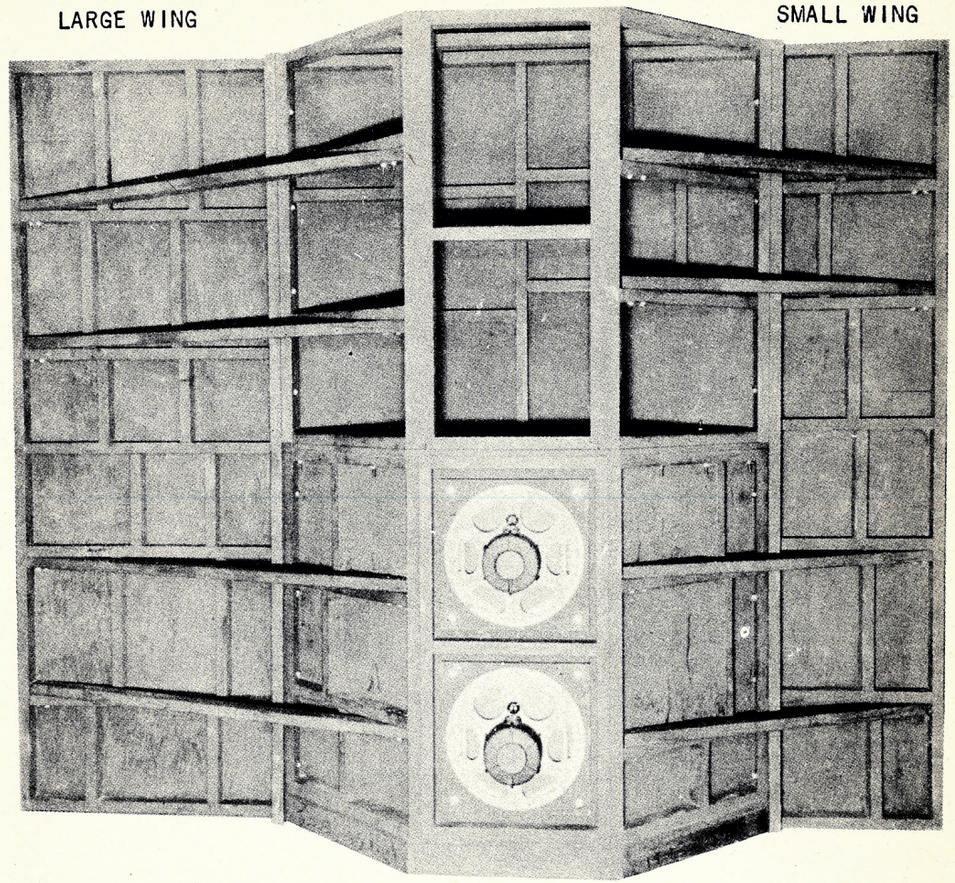

SPEAKER SECTION

TA-7396 BAFFLE ---- ASSEMBLY

NOTE: TA-7397 BAFFLE IS SAME AS ABOVE EXCEPT FOR SUBSTITUTION OF ANOTHER SPEAKER SECTION FOR THE FRAMEWORK SHOWN. TA-7397 BAFFLE ACCOMODATES FOUR 18" L.F. SPEAKER UNITS.

MOTIOGRAPH, INC.
CHICAGO, ILL.

WE-7552-1
8-30-41

PRINTED IN U.S.A.

1. ABSTRACT - Due to fluctuating supply conditions various different makes of motors have been furnished with Motiograph equipment. Complete information on replacement parts is not available. Refer to the following list for a brief description of the various motors that have been used. All of them are interchangeable mechanically.

1.1 The SH-7068 is the AC motor currently being supplied.

2. DESCRIPTION

SH-2673 Leland 1/6 HP Orig. motor used on SH-7500 reproducer has following parts:
SH-2759 Terminal Block
SH-2768 Thermal overload device
SH-2770 Starting switch tension spring
SH-2771 Starting switch centrifugal mechanism
SH-2775 Bearing

SH-2785 Leland 1/3 HP Capacitor start, type KL frame KL frame 27 form BOWTH Spec 11304 uses SE-2798 starting condenser, SH-2811 Thermal unit, SH-2816 starting switch assembly.

SH-2786 Same as SH-2785 except with weaker springs for 50 cycle operation.

SH-2787 Wagner 1/6 HP frame 571, type RB or RBR, 1725 RPM, split phase

SH-7043 GE 1/12 HP Model 5KH 35 AB 205A type KH, 1725 RPM uses:
SH-2788 Bearing
SH-2789 Resilient mounting ring
SH-2799 Starting switch

SH-7050 Kingston & Conley 1/4 HP Type SB uses:
SE-2793 bearing and SE-2794 bearing

SH-7051 GE 1/4 HP 1725 RPM Model 5KH 45 AB2200

SH-7052 Delco 1/4 HP "Thermometer" Type M Model A-6251

SH-7053 GE Model KH 1/4 HP

SH-7054 1/8 HP GE 1770 RPM Direct current operation

SH-7062 1/4 HP Emerson type S60 BEA style 1765-16422 1725 RPM uses:

SH-2814 resilient mounting ring and SH-2815 starting switch

SH-7065 Leland 1/6 HP type KS, frame 2 B567 1725 RPM uses:
SH-2809 switch tension spring and following Leland parts:
A5757 bearings, SB3293 cutout switch, SB3999B12 rotor, SB3990 and 995 starter, SA6245 rot. switch, A5942-2 act. sleeve and A5994 spring.

SH-7066 Same as 7065 except for 50 cycle operation

SH-7068 Motor GE 1/4 HP Model 5KH 42AB 1252

SH-7070 Marathon 1/6 HP Model 55 M290CW uses:
SH-7075 internal starting switch, SH-7076 throw out assembly and following Marathon parts:
#1018Z bearings, E3925-A rubber mounting rings,
#A-511634-8 rotor assembly

SH-7070C Same as SH-7070 but modified for condenser starting uses:
SH-2828 starting condenser
SH-2829 condenser mounting unit

SH-7071 Same as SH-7070 except has SH-2813 springs for 50 cycles

SH-7072 Same as SH-7067 plus rheostat for torque control

SH-7073 Same as SH-7068 plus rheostat for torque control

SH-7080 Marathon 1/4 HP 1725 RPM

SH-7081 Same as SH-7080 except has SH-2830 springs for 50 cycle operation

1. DESCRIPTION

1.1 The SH-2673 Motor for the SH-7500 Reproducer is a Leland Type KS, Frame 25, Form AOWTH, 1/6 H.P.,115 volt, 60 cycle, single phase motor. It has a 1-1/8" shaft extension to fit the SH-7500 Reproducer and is arranged for left-hand side wall mounting. A low-torque starting winding and a thermal overload protection device are incorporated in the design.

2. REPLACEMENT PARTS - (In ordering parts always give the Reference Number stamped on the motor nameplate.)

PART	PART NUMBER
Armature Assembly, complete	25-CN-KAR-63
Stator Assembly, complete	25F1
Switch End Frame	2C-386-C31
Pulley Shaft End Frame	26-395-3A
End Frame Screws	19-6
Switch End Frame Bearing only	A-128 - SH-2775
Pulley Shaft End Frame Bearing only	A-128 - SH-2775
Centrifugal Starting Switch Mechanism	B-285 - SH-2771
Centrifugal Starting Switch Tension Springs only	A-165 - SH-2770
Terminal Block (includes switch contacts)	B-466 - SH-2759
Thermal Overload Protection Device only	E-436 - SH-2768
Shaft End Play Washers	2415
Rubber Cushion Ring	28532-1 - PS-1606
Oil Cup	1168 - SH-2772 Straight SH-2773 Angle
Pressed Steel Base	SC-1043-3
Conduit Box Assembly	B-303
Cradle Latches	#28457 - SH-2774

Issued by
Engineering Department
Printed in U. S. A.

0. ABSTRACT

0.1 To overcome trouble experienced with SH-7070 (Marathon) Motors due to slow starting or failure to start, Motiograph is supplying a kit which adds a starting condenser to the circuit and increases torque.

0.2 This bulletin provides instructions for modifying SH-7070 Motor (Marathon) for improved starting characteristics.

1. PROCEDURE

1.1 Electrically this modification consists of connecting an electrolytic condenser in series with the internal starting switch to increase the starting torque. A kit of SH-7074 modification parts is required for each motor and includes the following:

Item No. 2 - 1 SH-2828 motor starting condenser
3 - 1 SH-2829 condenser mounting unit
4 - 1 10/32" x 5/16" RHIM screw nickel plated
5 - 2 12" lengths of motor lead wire
6 - 1 A-424 bushing
1 3" length of cambric tubing
1 Instruction sheet

1.2 Disconnect the 115 volt leads and motor coupling. Take motor from cradle after removing end clamps. After marking end bell and housing for reference in reassembling, remove end bell opposite shaft extension. Remove four screws holding internal switch in place. Drill a hole in the end bell as indicated in the drawing using a 11/32" drill. Ream hole to size for 3/8" bushing which is used to protect wires to the condenser. Unsolder blue lead (only wire on one end of switch) and replace with new 12" lead. Shorten blue lead by two inches and splice to other new 12" lead supplied. After soldering cover splice with cambric tubing and run the new wires through the bushing. Restore starting switch to proper position. Reassemble motor being sure that none of the wires touch the starting switch or rotating parts. Mount the condenser bracket by removing and discarding the top screw used to hold the connection box to the side of the motor using the new screw in the center hole of the bracket. Cut wires to proper length, tin ends and slip grommet over the wires and connect wires to the condenser terminals. Replace end covers on condenser bracket and after replacing clamps, coupling, 115 volt leads, etc., the motor should be ready for operation with increased torque. A reduction in starting time and torque can be obtained by using a smaller condenser. The 85-115 mfd unit was selected as the proper size to start the motor under extreme load and low voltage conditions.

2. MERCHANDISING

2.1 Motiograph advises that these kits are available on a no-charge basis and where needed the exhibitor should be advised to immediately obtain them from his Motiograph Dealer.

2.2 Each SH-7070 Motor to be modified requires:

1 - SH-7074 Modification Kit.

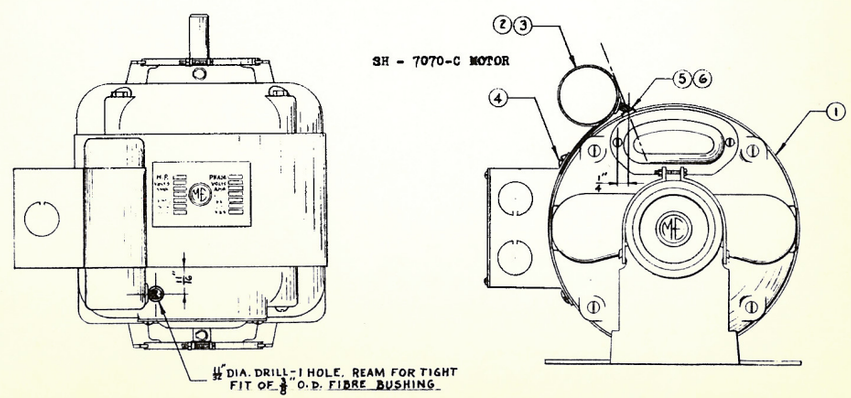

REPAIRS AND REPLACEMENT

Replacement of component parts, except of a minor nature, should not be attempted in the field due to time and expense involved.

A replacement panel is available, on a revolving stock basis, in New York.

Order 1 - SE-7512 Switching Panel, indicating the correct charge classification and return the old panel to New York immediately following its replacement.

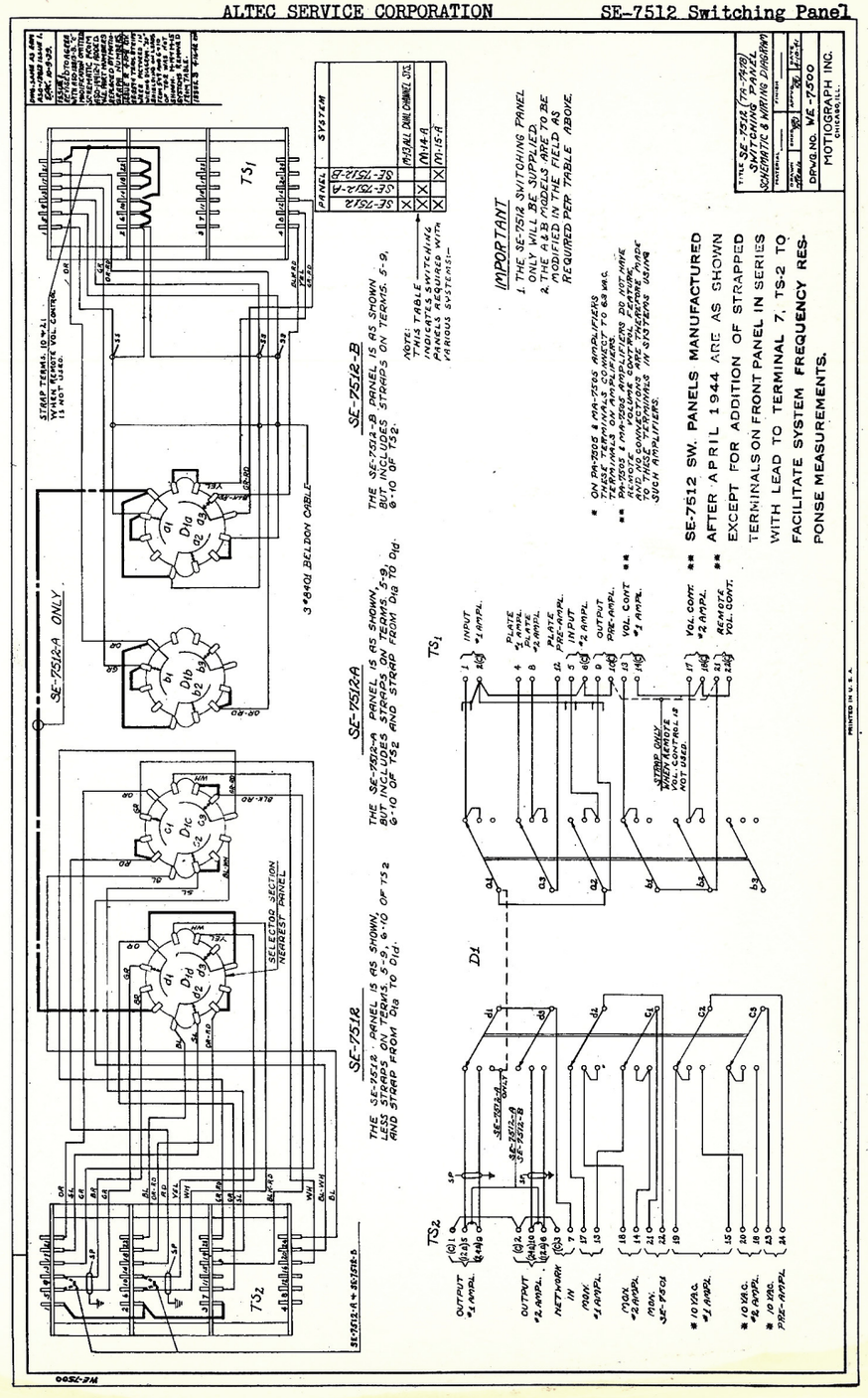
SE-7512 SW. PANELS MANUFACTURED
AFTER APRIL 1944 ARE AS SHOWN
EXCEPT FOR ADDITION OF STRAPPED
TERMINALS ON FRONT PANEL IN SERIES
WITH LEAD TO TERMINAL 7, TS-2 TO
FACILITATE SYSTEM FREQUENCY RES-
PONSE MEASUREMENTS.
IMPORTANT
1. THE SE-7512 SWITCHING PANEL ONLY WILL BE SUPPLIED.
2. THE 4 PANELS ARE TO BE MODIFIED IN THE FIELD AS REQUIRED PER TABLE ABOVE.
SE-7512-B
SE-7512A ONLY
SE-7512A
SE-7512
SELECTED SECTION NEAREST PANEL
TS1
TS2
D1
MOTIOGRAPH INC.
DRWG. NO. WE-7500

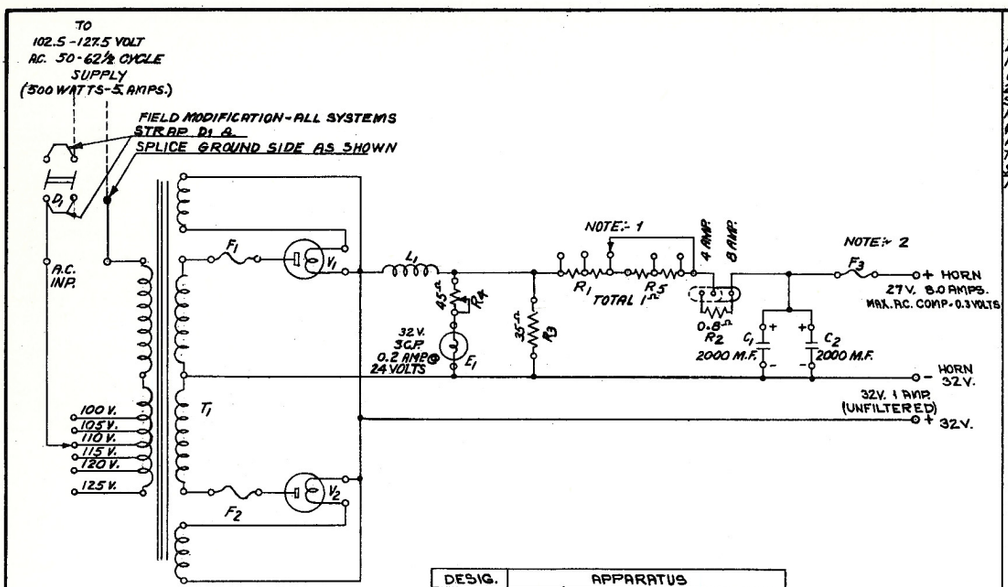

ISSUE:	APP'D
1 2-14-36 TO GND SIDE OF LINE AT D1 WAS NOT SHOWN. 0.2 AMPS. @ 24V. WAS NOT SPEC'D AT F1. NEW NOTE:- 1,2 & 3 ADDED. APPARATUS TABLE WAS NOT SHOWN	M.B.
NO.	C.F.A.
ISSUE:-2 10-11-37	M.B.

NOTES:-

1- R_1, R_2, & R_5 SHOULD BE ADJUSTED SO THAT L.S.T. FIELD CURRENT IS CORRECT.

2. F_3 SHOULD BE AS FOLLOWS:-

OUTPUT - AMPS. D.C.	F_3
3 OR 4	6 AMP.
6 OR 8	10 AMP.

3. DIMENSIONS:- 32"H × 16¼"W × 6"D
WEIGHT:- 125 LBS.
MOUNTS ON WALL.

	DESIG.	APPARATUS
*	C_1 & C_2	TA- 4115 CONDENSER
	D_1	H.H. # 8802 (10V. 250V. DPST) SWITCH
	E_1	G 534 LAMP 32V. 3CP CANDELABRA BASE
	F_1 & F_2	#91135 D.&W. 15 AMP CARTRIDGE FUSE
*	F_3	#91128 " 6. " " " #91133 " 10. " " "
	L_1	#51158-A REACTANCE
	R_1 & R_5	RE 0.5Ω RES. (TAPPED)
	R_2	TYPE "D" RES. 0.8Ω "Y" TERMS.
	R_3	TYPE "D" RES. 35Ω "Y" TERMS.
	R_4	YAXLEY #845 RES. 45Ω
	T_1	#51157 TRANSFORMER
*	V_1 & V_2	288-A VACUUM TUBE

* INDICATES NON-COMPONENT ITEM WHICH MUST BE ORDERED SEPERATELY

ASO-6876 WIRING DIAGRAM & CKT. LABEL
ASSOCIATED DRAWINGS

TA-4144-A POWER UNIT

SCHEMATIC

WESTERN ELECTRIC SOUND SYSTEMS

ELECTRICAL RESEARCH PRODUCTS INC. NEW YORK

DRAWN BY K.Y.H. DATE 2-4-36 APP'D [illegible]
CHECKED BY E.H. DATE 2-13-36 [illegible]

SCALE ~ ASL-2981

ASL-2981

PRINTED IN U.S.A.

ALTEC SERVICE CORPORATION

POWER UNIT, TA-4144-A

5310.11

ASO-6876

ISSUE:3

NOTES:

1 - CONNECT FLEXIBLE LEAD ON A.C. INPUT TERMINAL STRIP (TS_1) TO TAP CORRESPONDING TO MEAN AVERAGE VOLTAGE (100 V., 105 V. ETC.)

2 - TA-4115 CONDENSERS (C_1 & C_2-2000 MF) 288A VACUUM TUBES (V_1 & V_2) AND FUSE (F_3) ARE NOT SUPPLIED AS PART OF THE POWER UNIT.

3 - TO EXPOSE OUTPUT TERMINAL STRIP (TS_4) REMOVE CONDENSERS AND SCREWS FASTENING PARTITION, DRAW PARTITION FORWARD.

4 - DESIGNATIONS C_1, L_1, R_1 ETC. DO NOT APPEAR ON THE APPARATUS.

5 - FOR 4 AMP. OUTPUT INSTALL 6 AMP. FUSE. FOR 8 AMP. OUTPUT INSTALL 10 AMP. FUSE.

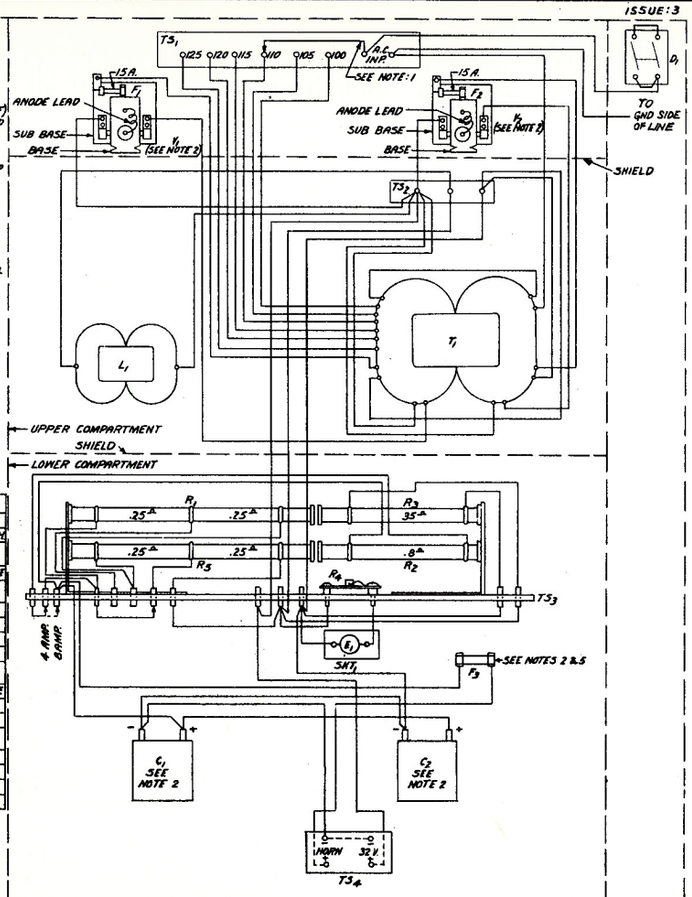

DESIGN.	APPARATUS
C_1, C_2	TA-4115 CONDENSER (SEE NOTE 2)
D_1	H. H. #8802 (10V. 250V. D.P.S.T.) SWITCH
E_1	G 5¾ LAMP, 32 V., 3 C.P. CANDELABRA BASE
F_1 & F_2	#91135 D&W 15 AMP. CARTRIDGE FUSE
F_3 (SEE NOTES)	#91128 " 6 " " " #91133 " 10 " " "
L_1	#5115BA REACTANCE
R_1 & R_5	RE 0.5 Ω RESISTOR (TAPPED)
R_2	TYPE "D" RESISTOR 0.8 Ω "Y" TERMS.
R_3	" " " 35 Ω " "
R_4	YAXLEY #845 RESISTOR 45 OHMS.
SKT_1	#612 BRYANT CANDELABRA RECEPTACLE
T_1	#51157 TRANSFORMER
V_1 & V_2	288A VACUUM TUBE (SEE NOTE 2)
BASE	E-46 MOGUL SOCKET BASE (INCLUDES ANODE LEAD.)
SUB-BASE	E-7 MOGUL SOCKET SUB BASE
ANODE LEAD	W-96 FAHNSTOCK ANODE LEAD
BULLSEYE	#736 BULLSEYE JEWEL, GREEN

TA-4144-A POWER UNIT

ISSUE:1	2-14-36	APP'D M.B.
D1 WAS #8602 SWITCH. R4 WAS AT F-45 RESISTOR 45 Ω (ADJUSTABLE CENTER TAP. F-TERMINAL S) ED		
ISSUE:2	9-15-37	E.H.
D1 WAS H.&H. SW. TO GND SIDE OF LINE NOT SHOWN. 288A VACUUM TUBES WERE #189048 TUNGAR BULBS	RL	
ISSUE:3	10-11-37	M.B.

ASL-2981 SCHEMATIC

ASSOCIATED DRAWINGS

TA-4144-A POWER UNIT

WIRING DIAGRAM & CIRCUIT LABEL

WESTERN ELECTRIC SOUND SYSTEMS

ELECTRICAL RESEARCH PRODUCTS INC. NEW YORK

DRAWN BY H.W.H. DATE 2-5-36 APP'D F.A.W. 1936

CHECKED BY E.H. DATE 2-15-36

SCALE

ASO-6876

PRINTED IN U.S.A.

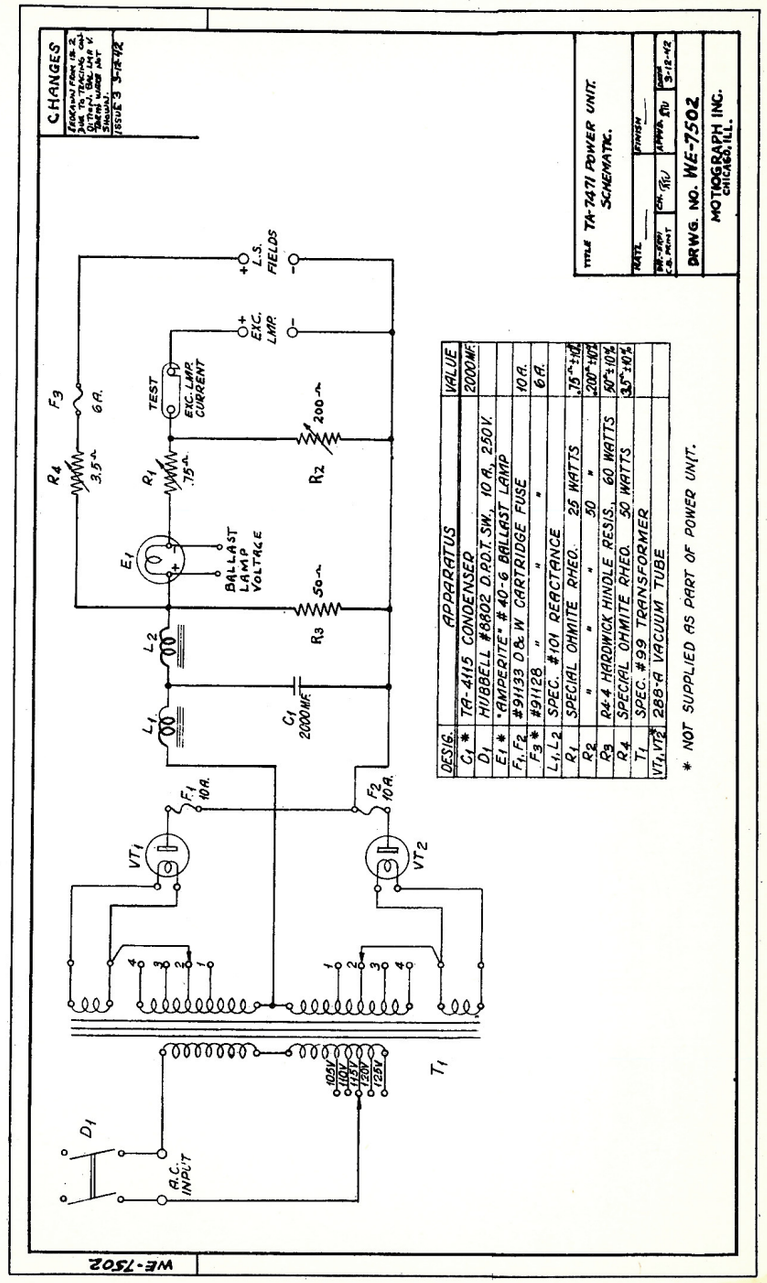

DESIG.	APPARATUS	VALUE
C1 *	TA-4115 CONDENSER	2000MF.
D1	HUBBELL #8802 D.P.D.T. SW. 10 A. 250 V.	
E1 *	"AMPERITE" #40-6 BALLAST LAMP	
F1, F2	#91133 D & W CARTRIDGE FUSE	10 A.
F3 *	#91128 " "	6 A.
L1, L2	SPEC. #101 REACTANCE	
R1	SPECIAL OHMITE RHEO. 25 WATTS	.75Ω ±10%
R2	" " 50 "	200Ω ±10%
R3	#44 HARDWICK HINDLE RESIS. 60 WATTS	50Ω ±10%
R4	SPECIAL OHMITE RHEO. 50 WATTS	3.5Ω ±10%
T1	SPEC. #99 TRANSFORMER	
VT1, VT2 *	286-A VACUUM TUBE	

TA-7471 Power Unit ALTEC SERVICE CORPORATION

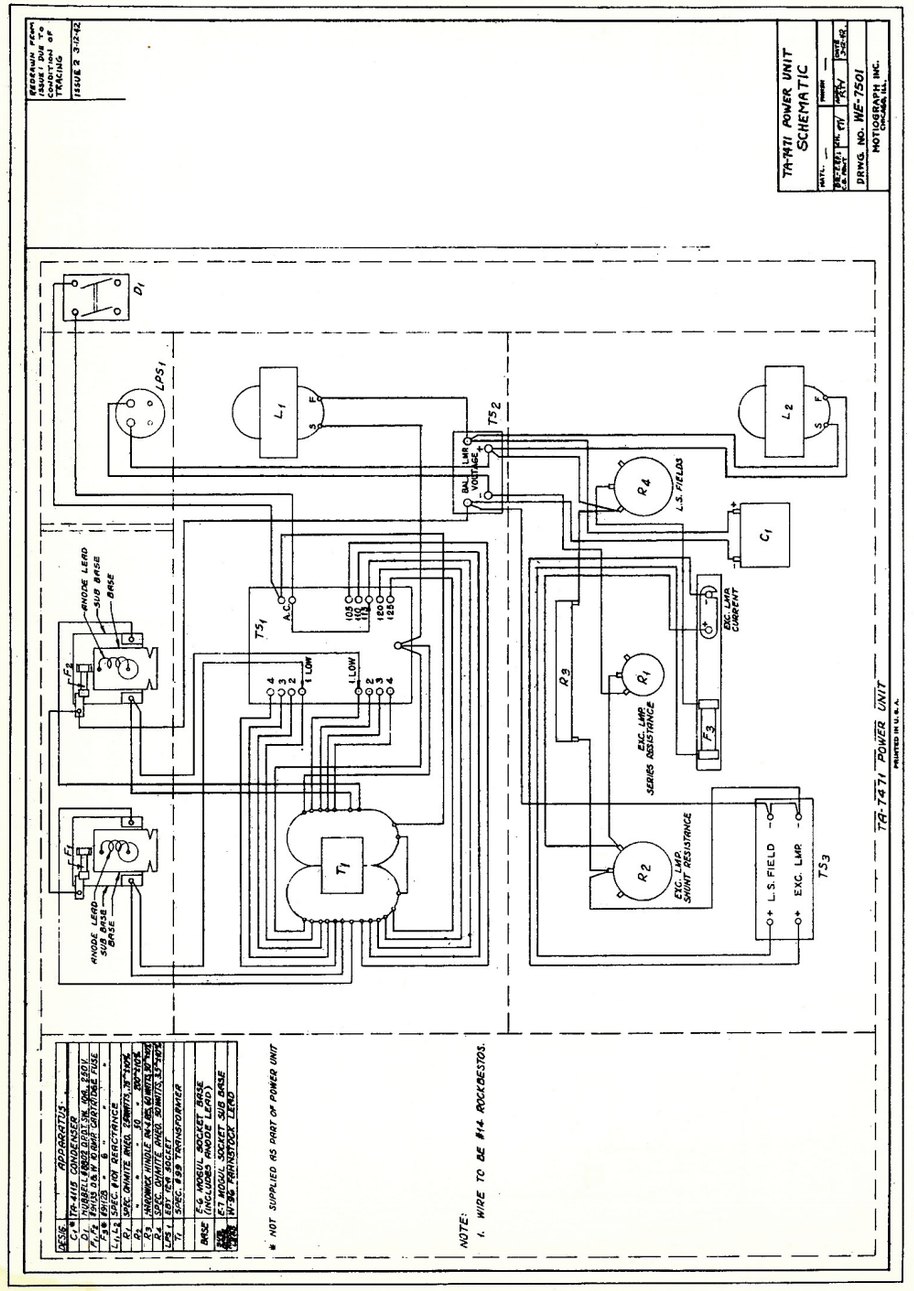

Printed in U.S.A.

5312.11

ZU-7500 Power Unit

ALTEC SERVICE CORPORATION

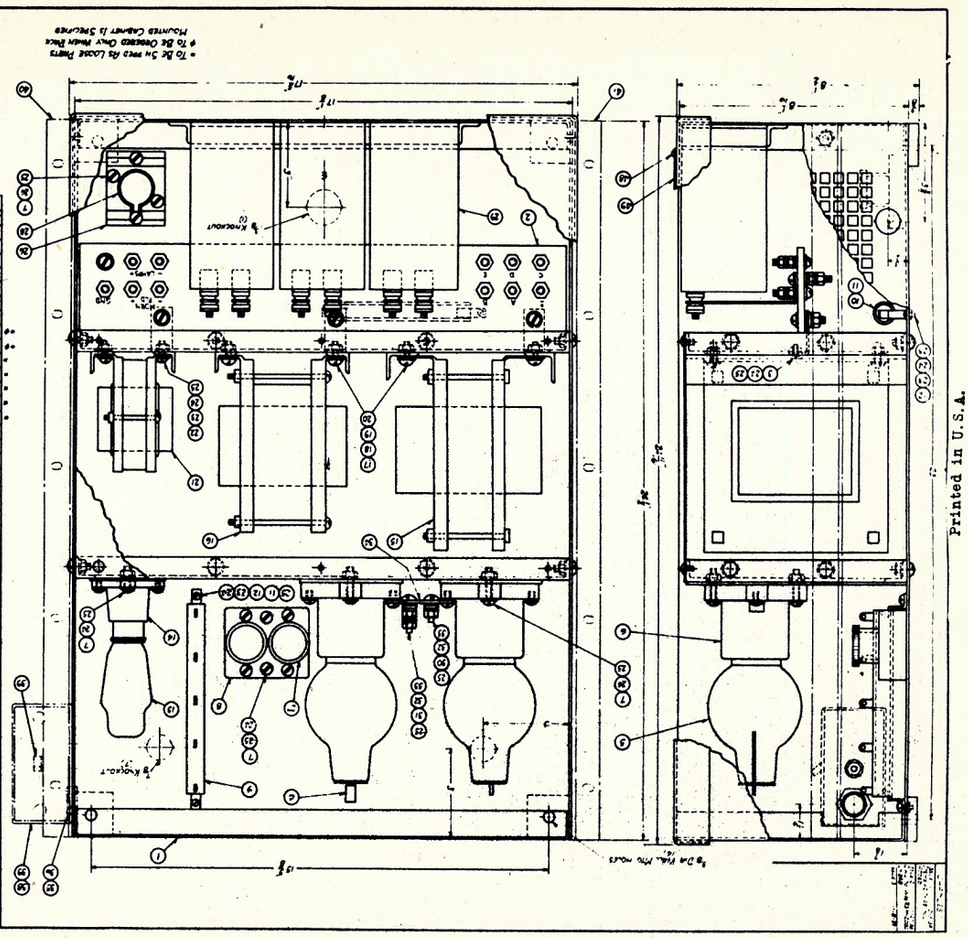

Sheet No	Name	Part No	Qty	Ref
1	Power Unit Cabinet Assembly	RPU-7500	1	
2	Item No. Board Assembly	RPU-7001	1	
3	#10-32 x 3/8 F H M Screw		3	(4) P
4	Receptacle Tube	RTU-2501	2	Bronze None
5	Panel Stock Clip	RPU-2520	2	Bronze None
6	Receptacle Tube Socket	RDU-2502	2	Steel (4) P
7	#10-32 x 3/4 F H M Screw		10	Brass N P
8	Double Circuit Base	RPU-2523	1	Steel (4) P
9	4 Ohm Resistor	RSU-2504	1	
10	35 Ohm Resistor	RSU-2505	1	
11	Resistor Holding Clip	RSU-2506	4	
12	#10-32 x 3/8 R H M Screw		4	Steel (4) P
13	Receptacle Tube	RPU-2507	1	
14	Receptacle Tube Socket	RDU-2508	1	
15	Power Transformer	RTU-2509	1	
16	Metal Chassis	RPU-2510	1	
17	1/4-20 x 1/2 R H M Screw		8	Steel (4) P
18	Shakeproof Lockwasher for 1/4		8	Steel (4) P
19	1/4 Washer (1/4 OD)		8	Steel (4) P
20	1/4-20 Hex Nut		8	Steel (4) P
21	Small Chassis	RPU-2511	1	
22	#10-32 x 1/4 R H M Screw		4	Steel (4) P
23	#10 Washer (3/8 OD)		8	Steel (4) P
24	#10-32 x 3/8 Wide Hex Nut		8	Steel (4) P
25	#10 Shakeproof Lockwasher		8	Steel (4) P
26	Single Circuit Base	RPU-2512	1	
27	15 Amp Fuse Fuse		2	
28	10 Amp Fuse Fuse		1	
29	Receptacle Connector	RPU-2513	3	
30	#10-32 x 5/8 R H M Screw		1	Brass N P
31	#10-32 x 1/2 R H M Screw		1	Brass N P
32	#10 Washer (3/8 OD)		6	Brass N P
33	#10-32 x 3/8 Wide Hex Nut		3	Brass N P
34	Rectifier Series Filament Strap	RPU-2514	1	Bronze None
35	1/4 Cable Nipple		1	Steel (4) P
36	1/4 Conduit Lock Nuts		2	Steel (4) P
37	Cover for Meter Box	RPU-2515	1	Steel (4) P
38	Meter Box	RPU-2516	1	
39	Toggle Switch	RPU-2517	1	
40	Mounting Angle (R.H.)	RPU-2518	1	Steel (4) P
41	Mounting Angle (L.H.)	RPU-2519	1	Steel (4) P
42	Mounting Material	RPU-2520	1	
43	Plunger Assembly Part of 0.D.	RPU-2521	1	
44	Plunger Part of Plunger		1	
45	Retaining Center		1	
46	Retaining Center for Items 3,19,23		1	
47	Retaining Center for Items 3,19,23		1	
48	Drive Screw	RPU-2522	4	Steel N P
49	Wood Parts	RPU-2523	1	

Associated Drawings
RPU-1000 Front Panel Assembly
RPU-2527 Schematic Diagram
RPU-2528 Wiring Diagram
RPU-2529 Control Chassis Assembly

PU-7500 Power Unit
A7556M1AY

Date	Issued By	Changes
7-6-7		

Drawn
Checked
Date
Scale
Dwg. No. RPU-7530
Mod. No. 1-2-3-4-5-6-7

NOT SCALE DRAWING

* To Be Shipped Loose Parts
# To Be Ordered Over Main Rack
Mounted Cabinet Is Shipped

Printed in U.S.A.

RPU-2548

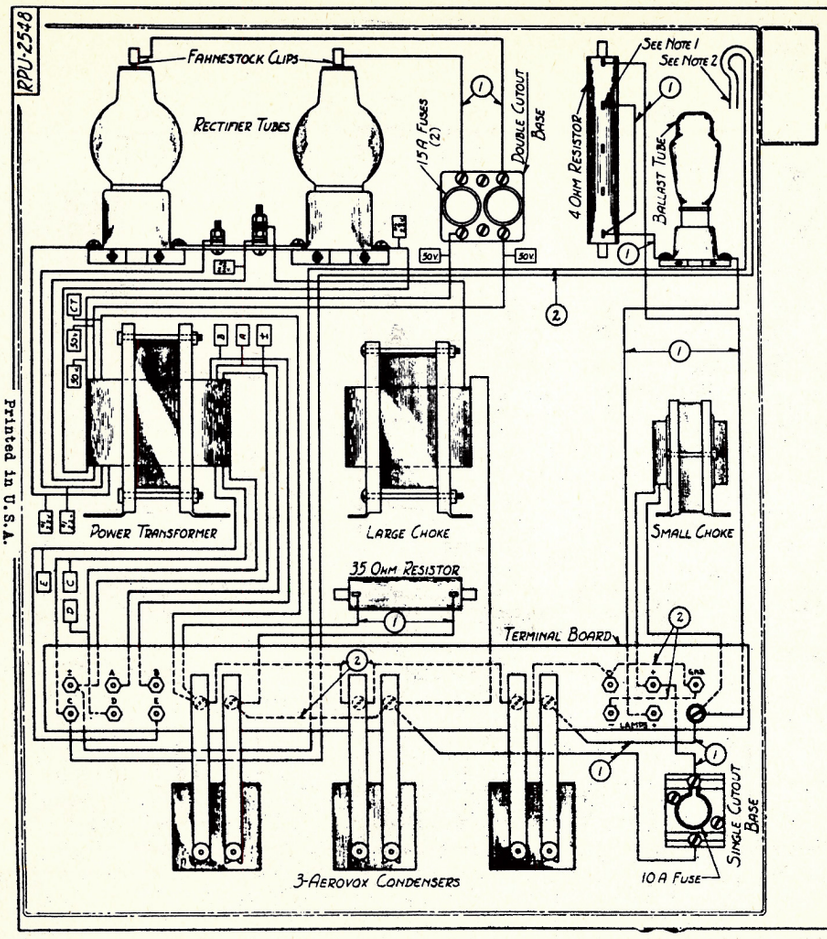

Item No	Pc Req'd	Name & Description	CHANGES
1	8	#16 Deltabeston Flexible Strand Cable, Black Asbestos Braid (600 Volt)	
2	12	#16 Deltabeston Switchboard & Rheostat Wire Black Asbestos Braid, Solid Conductor, 600.	

General Note
Tin Ends Of Flexible Cables Before Connecting.
Dress All Leads To Have Right Angle Bends So Far As Possible, And To Be Close To Cabinet Walls & Tube Shelf

Note: 1
Tin End But Do Not Solder On Resistor. (Field Adjustment.)

Note: 2
(Leads From 2 & C On Terminal Block)
To Be Connected To Switch During Installation. May Be Rerouted To Opposite Side For Left-Hand Switch Box Mounting.

Associated Drawing
RPU-2547 Schematic Diagram

R.U. 7500
Used On RPU-7500

MM-1000 Power Unit
Wiring Diagram

Material | Finish
Drawn By | Checked By | Approved | Date
Dwg No RPU-2548
Mot. Graph Inc Chicago Ill.

Printed in U.S.A.

ALTEC SERVICE CORPORATION
MOTIOGRAPH-MIRROPHONIC SOUND SYSTEMS

PU-7502 POWER UNIT

APU-2615

NOTE: UNLESS OTHERWISE SPECIFIED ALL
DECIMAL DIMS. ± .001
FRACTIONAL DIMS. ± .005

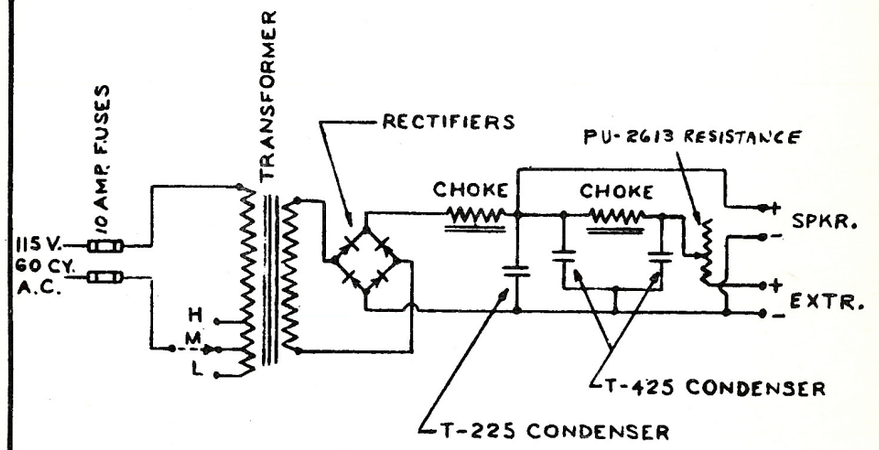

MAJOR PARTS

ITEM	NO. REQ'D.
TRANSFORMER NO. B-L443	1
CHOKE NO. 1758	2
RECTIFIER NO. 562C1	2
CONDENSER NO. T-225	1
CONDENSER NO. T-425	1
2 POLE FUSE BLOCK	1
PU-2613 RESISTANCE, 40HM, 160 WATT	1

PU-7502 POWER UNIT - SCHEMATIC DIAGRAM

ISSUE	DATE
1	9-12-46
2	11-26-46

MOTIOGRAPH INC.
CHICAGO, ILL.

SIZE A

DRAWN:
TRACED:
CHECKED:
APRVD.:

DWG. NO.
APU-2615

Printed in U.S.A.

PU-7502 POWER UNIT

ALTEC SERVICE CORPORATION

APU-2614

NOTE: UNLESS OTHERWISE SPECIFIED ALL
DECIMAL DIMS. ± .001
FRACTIONAL DIMS. ± .005

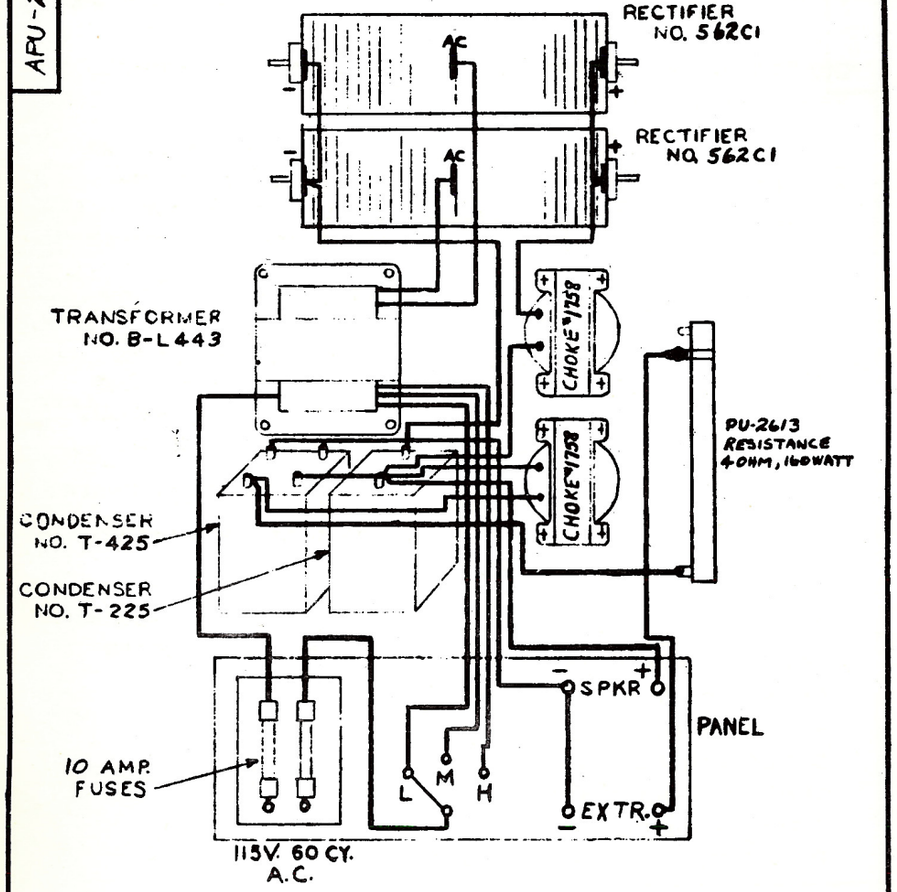

PU-7502 POWER UNIT - WIRING DIAGRAM

ISSUE	DATE
1	9-12-46
2	11-26-46

MOTIOGRAPH INC.
CHICAGO, ILL.

SIZE A

DRAWN: Rawin
TRACED:
CHECKED:
APRVD.:

DWG. NO. APU-2614

6-24-49

5312.99

ALTEC SERVICE CORPORATION
MOTIOGRAPH POWER UNIT,
SOUND EQUIPMENT BULLETIN SE-7520
ADDENDUM #1

1. SUBJECT - Replacement for SE-2605 (CE-206) Mercury Vapor Rectifier.

2. GENERAL - Field and laboratory tests have shown that the 189048 Tungar Bulb may be used as a direct replacement for the SE-2605 (CE-206) Mercury Vapor Rectifier under the following conditions:

   (a) Both rectifier bulbs must be of the same type.

   (b) Local conditions must be such that the lower output voltage, present when the tungar bulbs are used, may be compensated for by adjustment of the series resistance in the power unit.

3. MODIFICATION - When the 189048 Tungar Bulbs are first installed, it is recommended that the MA-2521 Plate Switch (S-2) be strapped out.

4. MERCHANDISING - When present SE-2605 (CE-206) spares have been placed in service, order replacements as 189048 Tungar Bulbs.

Issued by
Engineering Department
Printed in U.S.A.

MOTIOGRAPH

SOUND EQUIPMENT BULLETIN POWER UNIT, SE-7520

1. DESCRIPTION AND CHARACTERISTICS

Type	Chassis type, full wave, filtered rectifier
Output	Exciter lamp circuit, 18 volts, 4 amperes, D. C., (two 9 V. 4 A. lamps in series) Loudspeaker field circuit, 24 volts, 3 amperes, D. C.
Filtering	Exciter lamp circuit, 0.01 volt max. AC component. Loudspeaker field circuit, 0.3 volt max. AC component.
Power Supply	105-125 volts, 60 cycles, 375 watts
Accessories	2 - SE-2605 Rectifier Tubes (order separately) 1 - MA-7000 Cabinet (order separately) 2 - 6 ampere plug fuses (internal, AC line) 1 - 6 ampere plug fuse (internal, EXC. output) 1 - 3 ampere plug fuse (internal, SPKR. output)
Dimensions (cabinet)	17-5/16" wide, 19-3/8" high, 10-1/8" deep
Weight (with cabinet)	55 pounds

2. INSTALLATION

2.1 Mount cabinet on rack using mounting angles, or on wall using holes in back of cabinet. If rack mounted, place at top of rack because of heat developed during operation. After the wiring has been run, slide the chassis on the brackets and secure it in place with the two 8-32 screws and nuts provided.

2.2 The power unit may be mounted in the booth or in an adjoining room if local regulations require it. The location must have adequate ventilation to carry off the heat developed in the power unit.

3. OPERATION

3.1 Preheat rectifier tubes for 3 minutes (filament switch) before applying plate voltage (plate switch).

4. ADJUSTMENTS

(a) Connect the plate transformer primary tap to the terminal (A, B, C, or D) which gives the best approximation to 24 volts D. C. potential as measured at the field terminals of loudspeaker units on the stage. As received, the taps will be found connected to terminal B. With an AC line voltage of 115 volts and average circuit resistance conditions this will usually be the best tap to use. Output voltage increases as the tap is moved to C or D, and decreases when the tap is connected to terminal A. Loudspeaker unit performance is essentially the same over a field terminal range of 20 to 30 volts.

(b) After the plate transformer primary tap has been adjusted as outlined in (a), adjust the shorting strap on the exciter lamp resistance to give a current of approximately 3.8 amperes in the series circuit at average line voltage.

ASSOCIATED DRAWINGS

RSE-2622 Wiring Diagram and Schematic (Replaces ASE-2613 Schematic, & ASE-2614 Wiring Diagram)

Issued by
Engineering Department
Printed in U. S. A.

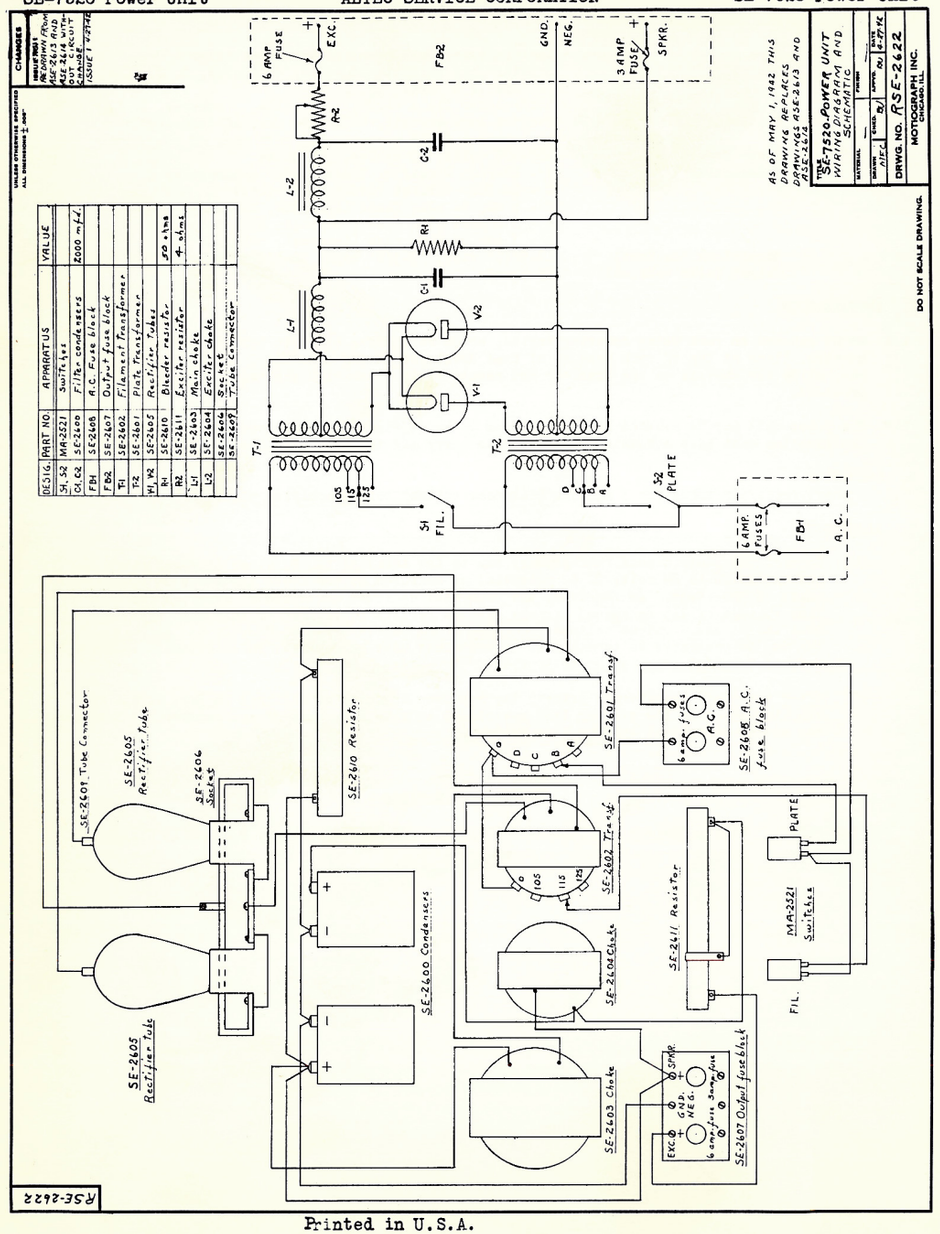

Printed in U.S.A.

1. DESCRIPTION AND CHARACTERISTICS

Type . . . . . .Transformer mounted on angle iron frame
Primary. . . . . .105-125 Volts, 60 cycles, 50 Watts
Secondary. . . . . .18 Volts - 4 Amp AC
Size . . . . . .16-3/4" x 5" x 3-1/2"
Weight . . . . . .8 lbs.

2. USE

2.1 This Auxiliary Power Unit which is to be mounted in the MA-7000 Cabinet below the sound system's regular SE-7520 Power Unit provides facility for emergency operation of system exciter lamps on AC in case of failure of DC exciter lamp supply.

3. INSTALLATION

3.1 Disconnect the wiring to the SE-7520 Power Unit and bend the leads out of the way while the auxiliary unit is being put in place in the bottom of the MA-7000 Cabinet. Cabinets having cover fastening screws do not have clearance for the unit's frame, so the screws must be removed while it is being installed; this is unnecessary in cabinets having covers held on with latches. Align the tapped holes in the power unit end brackets with the lowest holes in the cabinet sides and anchor the unit in place with the screws provided. Strap the upper terminals of the fuse block to the corresponding terminals of the SE-7520 Power Unit and reconnect the AC supply circuit. Strap the "EXC- DC IN" terminals to the regular power unit's "EXC" and "GND-Neg" terminals. The external leads formerly going to these terminals are reconnected to the auxiliary unit's "EXC.OUT" terminals instead.

4. OPERATION

4.1 With the AC-DC switch S-2 in the DC position, and with a suitable DC ammeter connected into the series exciter lamp circuit, adjust the short-strap on the exciter circuit resistor of the SE-7520 Power Unit to give the desired exciter lamp current. Then replace the ammeter with an AC meter of similar range and operate the AC-DC switch to the AC position. Make certain that the 3 ampere fuses are in place and then throw the toggle switch S-1 to its "ON" position. Adjust the shorting strap on the auxiliary power unit's resistor to provide the same current value as in the case of DC operation.

4.2 For normal system operation on DC the toggle switch S-1 should be in its "OFF" position and the AC-DC switch S-2 in its DC position. In changing from DC to AC operation it is advisable though not absolutely necessary, to first shut off both the plate switch of the regular power unit and the toggle switch of the auxiliary power unit in order to prevent destructive arcing at the AC-DC switch contacts.

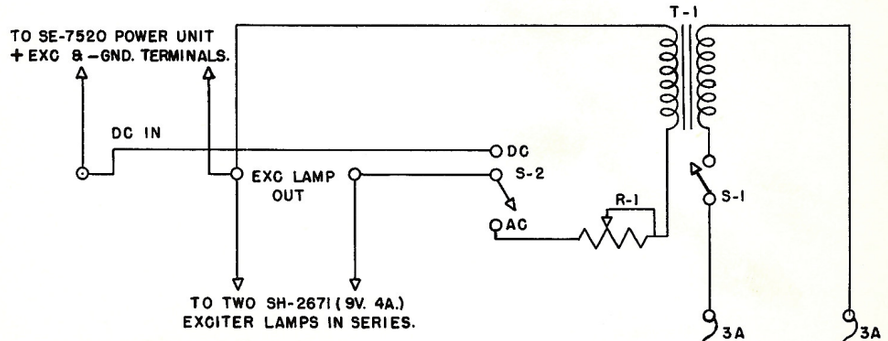

DESIG. NO.	PART NO.	APPARATUS
S-1	MA-2521	SWITCH
S-2	SE-2732	SWITCH
FB-1	SE-2608	FUSE BOX
R-1	SE-2611	RESISTOR - 4 OHMS - 100 W
T-1	SE-2642	TRANSFORMER

Issued by
Engineering Department
Printed in U. S. A.



D. C. Collins

1. DESCRIPTION AND CHARACTERISTICS

Type -	Chassis type, full-wave, filtered rectifier
Output -	SE-7570-A-Two exciter lamp circuits - each 9 volts, 4 amperes, D.C. SE-7570-B-Three exciter lamp circuits, each 9 volts, 4 amperes. SE-7570-D-Two exciter lamp circuits with separate power transformer for improved emergency operation.
Filtering -	Less than 0.1% max. AC component
Power Supply -	105-125 volts, 50/60 cycles, 250 watts
Accessories -	Two SE-2887 (NL-649) Rectifier Tubes (order separately). One MA-7000 Cabinet (order separately. For rack mounting order also one MA-7018 Set Rack Mounting Angles).
Dimension (cabinet)	17-5/16" wide, 19-3/8" high, 10-1/8" deep.
Weight (with cabinet)	55 pounds
Associated Drawings	RSE-2888, SE-7570-A Power Unit, Schematic and Wiring Diagrams. RSE-2889, SE-7570-B Power Unit, Schematic and Wiring Diagrams. RSE-2957, SE-7570-D Power Unit, Schematic and Wiring Diagrams.

2. INSTALLATION

(a) The power unit may be mounted in the booth or in a separate power equipment room if local regulations require it. The location must have adequate ventilation to carry off the heat developed.

(b) Mount cabinet on the amplifier rack using MA-7018 mounting angles or on the wall using holes in cabinet back. If rack mounted, preferred location is at top of rack because of heat developed during operation. Separate #14 RH circuits are required to the EXC. terminals of each SH-7500 Reproducer of the sound system and a #14 RH wire must connect the power unit GND. terminal to the main sound system ground. After the wiring has been run, slide the chassis on the cabinet brackets and secure it in place with the two 8-32" screws and nuts provided with the cabinet. Connect the A.C. supply, the exciter lamp leads, and the ground lead to the designated terminals.

Issued by
Engineering Department
Printed in U. S. A.

3. OPERATION

(a) Ascertain the average line voltage prevailing in the projection room and connect the T-1 transformer primary tap to the terminal (105, 115 or 125) most nearly corresponding to the average line voltage. If the power unit is type SE-7570-A for two machines, check to make certain that the two BLK-RD plate leads are connected to the transformer secondary taps marked "35" and that the SLATE wire feeding the "AC" side of S-2 is connected to the "21" terminal. The corresponding terminals for the three machine SE-7505-B Power Unit are marked "46" and "30" respectively.

(b) Set the shorting strap on the exciter circuit control resistance R-2 so that all the resistance is in the circuit. Check to see that 6A fuses are installed in the POWER and LOAD fuse holders, set the POWER and LOAD switches to their OFF positions, and snap the CIRCUIT INDICATOR switches to their DOWN positions. Install the two rectifier tubes in their sockets. Snap the POWER switch to ON (to DC in case of SE-7570-D) and permit the rectifier tubes to heat initially for approximately three minutes. Then turn the LOAD switch to DC; the characteristic blue glow of mercury vapor rectifiers should be visible in the tubes, and the reproducer exciter lamps should light. After the power unit has been in operation long enough to permit all components to reach stable operating temperatures, connect a D.C. ammeter of suitable range (0-5 or 0-10 amperes) into the series exciter lamp circuit at any of the power unit EXC terminals, or at one of the reproducer EXC terminals, and set the current to 3.8 amperes by adjusting the position of the shorting strap on R-2. This adjustment should be made when the line voltage is somewhere near its average value so that the current will be neither excessively high nor excessively low as the line voltage departs from this value. Snap the LOAD switch to its OFF position and remove the ammeter from the circuit. Except for the initial preheating period, the POWER switch need be turned ON only about 60 seconds before the LOAD switch is thrown to its DC position. In case of drive-in theatre where temperature is below normal a longer warm-up period should be used. Failure to allow this short preheating period will cause arc-backs in the tubes, and consequent serious shortening of their lives. If the line voltage fails for any reason, the LOAD switch should immediately be thrown to its OFF position.

(c) In locations subject to frequent power interruptions the necessity for preheating the mercury vapor rectifier tubes may be objectionable. In such cases power units may be ordered with tube sockets installed for G.E. Tungar Rectifier Tubes #12X825. Power unit operation is essentially the same using either tube type; the Tungar tubes need no preheating, but have considerably shorter rated life than the mercury vapor tubes. The Tungar tube sockets mount over the regular four prong sockets in the power units, and are connected in parallel with them. For field installation they may be ordered as an SE-7177 Tungar Adapter Kit, which includes two sockets with connection leads, and mounting screws and fiber washers. The required #12X825 Tungar Tubes must

be obtained or ordered separately. To mount the sockets, remove the four binding head screws between the four prong sockets from their weldnuts. Place two fiber washers over each weldnut and mount the sockets, using the 8-32 x ½" binding head screws supplied in the kit. Thread the connection leads through the porcelain bushing between the sockets, and on the under side of the chassis, connect the leads in parallel with the correspondingly color-coded leads to the terminals of the four prong sockets (green to terminal #1, white to #4, and the red-black plate lead to terminal #2.) Do not disturb the leads on socket terminals #3, which are used merely as circuit junction points.

(d) Reference to the power unit schematic diagrams will show that the 32 volt circuit indicator pilot lamps are connected in parallel with each exciter lamp output circuit. On the normal 9 volt drop across each lamp they burn very dimly, but come to full brilliancy if that lamp burns out, or if its circuit is otherwise opened. Operation on the other lamp, or lamps, is restored by throwing the toggle switch below the bright indicator to its UP position, thus closing the series circuit via the associated dummy load resistor. This operation completely disconnects the exciter lamp circuit in trouble, and burned out lamps may therefore be replaced without interference to other lamps, and without arcing at socket contacts. Indicator lamps should last indefinitely, normally operating so far under rated voltage; in the event of filament failure due to vibration or accident, they may be replaced easily by pulling their sockets off the socket mounting brackets and out into the open. Socket leads are sufficiently long to permit this.

(e) In the event of rectifier tube failure during a performance, exciter lamps may be temporarily operated on raw A.C. by snapping the LOAD switch S-2 down to its AC position until the tube can be replaced. When SE-7570-D power unit is used, both S-1 and S-2 should be in the DOWN or AC position. This removes the T-1 Power Transformer, tubes, chokes and condensers from the circuit.

4. MAINTENANCE

(a) Replace rectifier tubes and indicator lamps as they become inoperative. Periodically check connections for looseness, and clean and burnish tube base contacts to prevent heating and possible erratic variations in output current. Dust and dirt should be blown or cleaned out of the power unit frequently to insure proper ventilation. Current in the series output circuits should be checked regularly, and after replacement of rectifier tubes. Power and load circuit fuses should be inspected occasionally for contact corrosion; yearly replacement will usually forestall fuse failure due to crystalization from heat and vibration.

(b) Ordering information for replacement parts is given on the circuit diagrams.

Issued by
Engineering Department
Printed in U. S. A.

ALTEC SERVICE CORPORATION
MOTIOGRAPH SOUND SYSTEMS

SE-7570-A POWER UNIT

RSE-2888

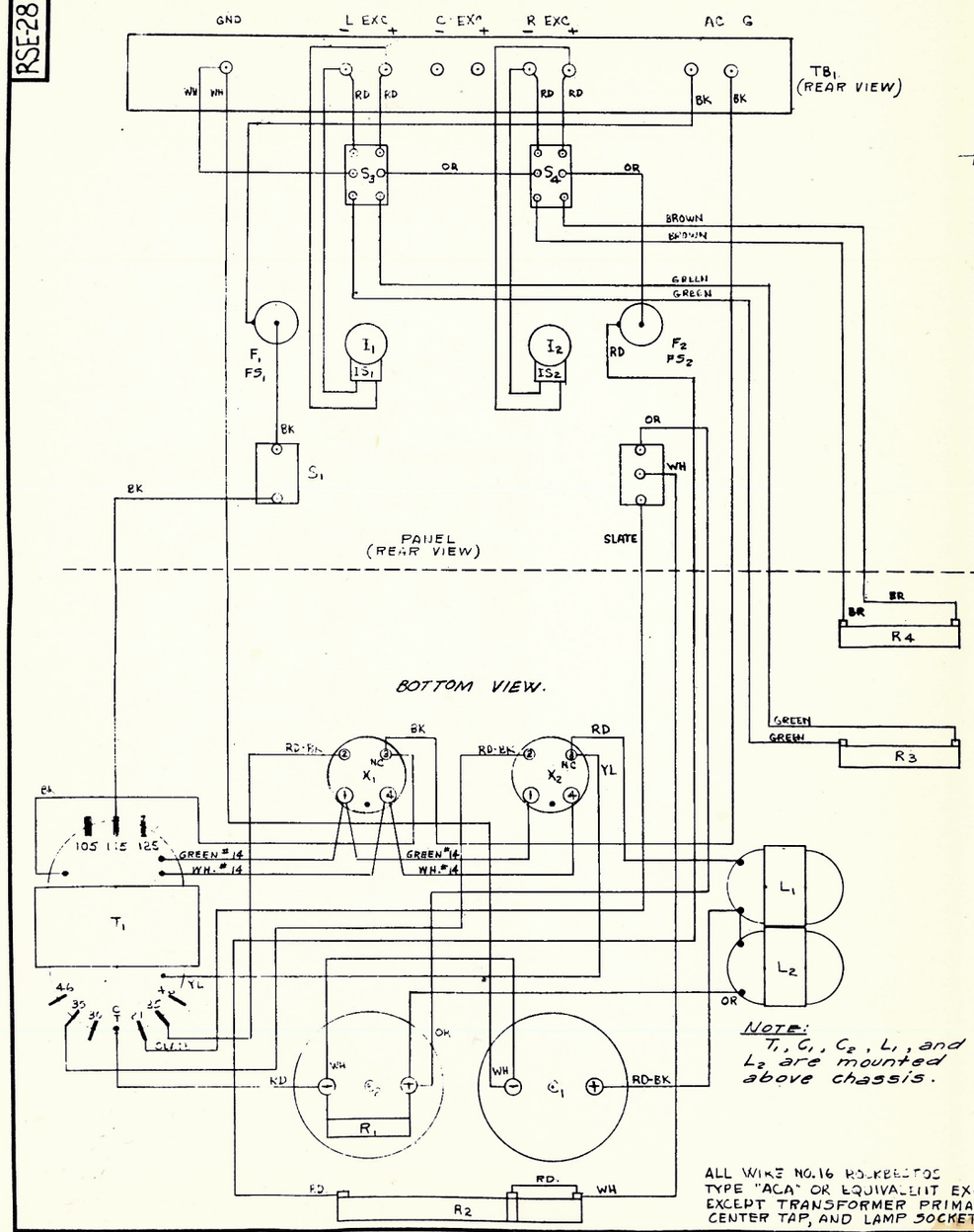

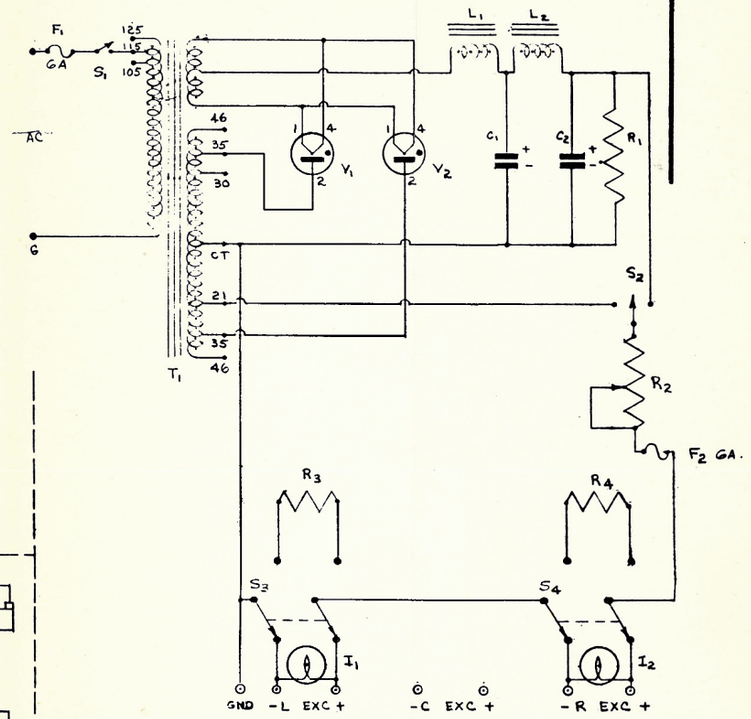

NOTE: T_1, C_1, C_2, L_1, and L_2 are mounted above chassis.

SYMBOL	PART NO.	NAME
S_1	MA-2521	SWITCH (PWR.)
X_1 X_2	MA-2604	SOCKET
C_1 C_2	SE-2600	CONDENSER, 2000μf, 50 V.
L_1 L_2	SE-2604	CHOKE
R_2	SE-2611	RESISTOR 4Ω 100 W
I_1 I_2	SE-2725	LAMP (32 VOLT)
S_2	SE-2788	SWITCH (DC-OFF-AC)
IS_1 IS_2	SE-2806	LAMP SOCKET
T_1	SE-2880	POWER TRANSFORMER
R_1	SE-2884	RESISTOR 300Ω 10 W.
R_3 R_4	SE-2886	RESISTOR 2.25Ω 45 W.
V_1 V_2	SE-2887	RECTIFIER TUBE (NL-649)
TB_1	SE-7167	TERMINAL BOARD ASSEMBLY
F_1, F_2	SE-2755	FUSE 6A
S_3, S_4	SE-2891	SWITCH (CIRCUIT INDICATOR)
FS_1, FS_2	SE-7169	FUSE HOLDER

Connect T-1 primary tap to suit prevailing average line voltage.

After power unit is thoroughly warm, connect DC ammeter in series exciter lamp circuit at either set of output terminals, and with switch S-2 in "DC" position, set current to 3.8 amperes by adjusting strap on R-2.

Indicator lamps I_1 and I_2 burn only dimly on normal 9 volt drop across exciter lamps, but come to full brilliancy if associated exciter burns out. Operation on the remaining exciter is restored by throwing UP the switch below the bright indicator while burned out exciter is replaced.

Exciters are operated on raw AC by throwing switch S-2 to "AC" position.

ALL WIRE NO. 16 ROCKBESTOS TYPE "ACA" OR EQUIVALENT EXCEPT AS NOTED & EXCEPT TRANSFORMER PRIMARY, CENTER TAP, AND LAMP SOCKET LEADS.

TITLE SE-7570-A POWER UNIT
SCHEMATIC AND WIRING DIAGRAMS

MATERIAL ~ FINISH ~

DRAWN AKB CHKD. APPVD. DATE

DRWG. NO. RSE-2888.

MOTIOGRAPH
CHICAGO, ILL.

CHANGES
ISSUE NO. 1 4/14/30

Printed in U.S.A.

RSE-2597

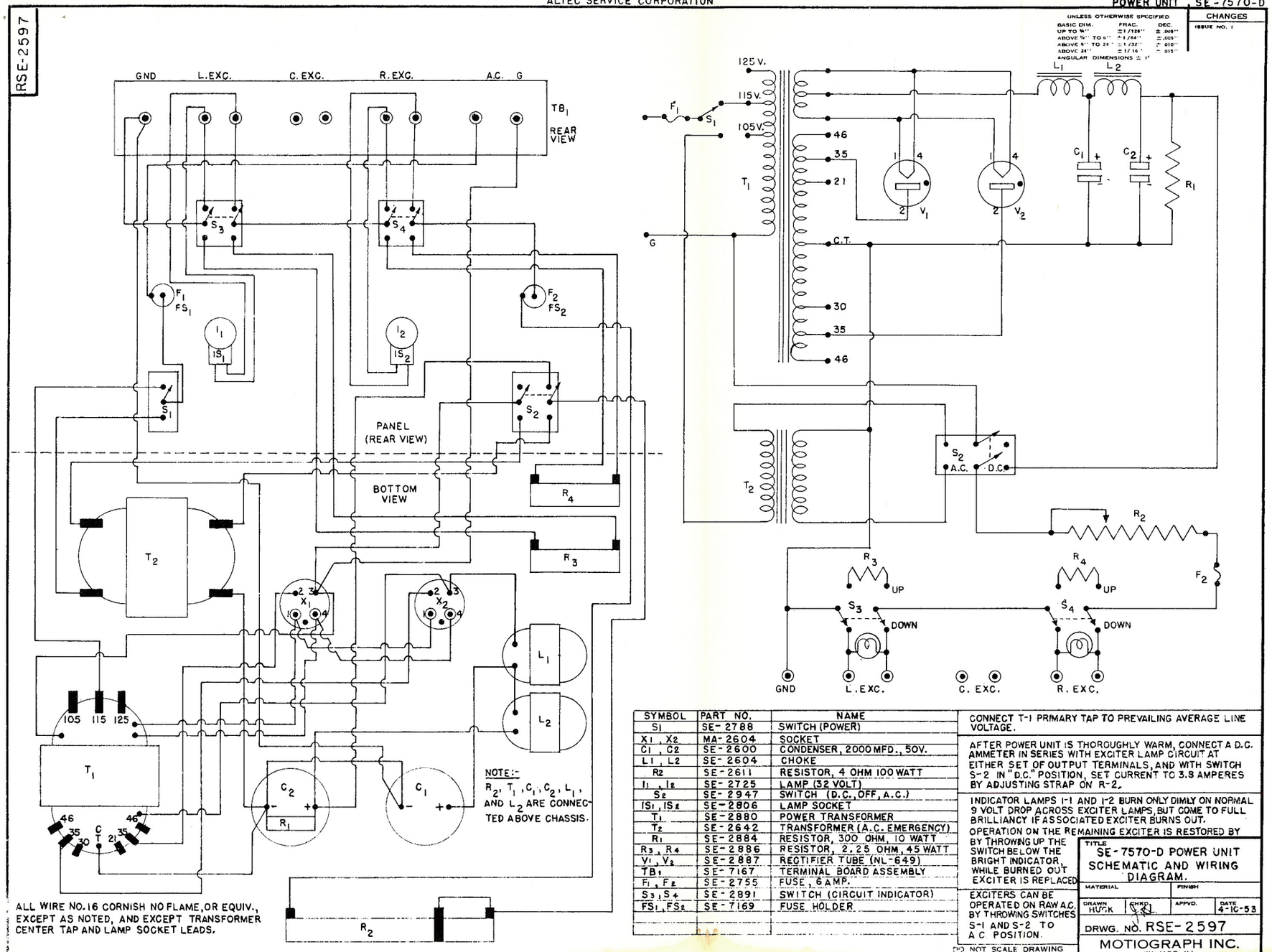

UNLESS OTHERWISE SPECIFIED

BASIC DIM.	FRAC.	DEC.
UP TO 6"	± 1/128"	± .008"
ABOVE 6" TO 24"	± 1/64"	± .005"
ABOVE 24"	± 1/32"	± .010"
ANGULAR DIMENSIONS ± 1°		± .015"

CHANGES
ISSUE NO. 1

SYMBOL	PART NO.	NAME
S1	SE-2788	SWITCH (POWER)
X1, X2	MA-2604	SOCKET
C1, C2	SE-2600	CONDENSER, 2000 MFD., 50V.
L1, L2	SE-2604	CHOKE
R2	SE-2611	RESISTOR, 4 OHM 100 WATT
I1, I2	SE-2725	LAMP (32 VOLT)
S2	SE-2947	SWITCH (D.C., OFF, A.C.)
IS1, IS2	SE-2806	LAMP SOCKET
T1	SE-2880	POWER TRANSFORMER
T2	SE-2642	TRANSFORMER (A.C. EMERGENCY)
R1	SE-2884	RESISTOR, 300 OHM, 10 WATT
R3, R4	SE-2886	RESISTOR, 2.25 OHM, 45 WATT
V1, V2	SE-2887	RECTIFIER TUBE (NL-649)
TB1	SE-7167	TERMINAL BOARD ASSEMBLY
F1, F2	SE-2755	FUSE, 6 AMP.
S3, S4	SE-2891	SWITCH (CIRCUIT INDICATOR)
FS1, FS2	SE-7169	FUSE HOLDER

CONNECT T-1 PRIMARY TAP TO PREVAILING AVERAGE LINE VOLTAGE.

AFTER POWER UNIT IS THOROUGHLY WARM, CONNECT A D.C. AMMETER IN SERIES WITH EXCITER LAMP CIRCUIT AT EITHER SET OF OUTPUT TERMINALS, AND WITH SWITCH S-2 IN "D.C." POSITION, SET CURRENT TO 3.8 AMPERES BY ADJUSTING STRAP ON R-2.

INDICATOR LAMPS I-1 AND I-2 BURN ONLY DIMLY ON NORMAL 9 VOLT DROP ACROSS EXCITER LAMPS, BUT COME TO FULL BRILLIANCY IF ASSOCIATED EXCITER BURNS OUT. OPERATION ON THE REMAINING EXCITER IS RESTORED BY BY THROWING UP THE SWITCH BELOW THE BRIGHT INDICATOR, WHILE BURNED OUT EXCITER IS REPLACED.

EXCITERS CAN BE OPERATED ON RAW A.C. BY THROWING SWITCHES S-1 AND S-2 TO A C POSITION.

DO NOT SCALE DRAWING

TITLE
SE-7570-D POWER UNIT SCHEMATIC AND WIRING DIAGRAM.

MATERIAL | FINISH

DRAWN	CHKD.	APPVD.	DATE
HUCK			4-16-53

DRWG. NO. RSE-2597

MOTIOGRAPH INC.
CHICAGO, ILL.

ASE-7668

UNLESS OTHERWISE SPECIFIED

BASIC DIM.	FRAC.	DEC.
UP TO 6"	±1/128"	±.008"
ABOVE 6" TO 6"	±1/64"	±.008"
ABOVE 6" TO 24"	±1/32"	±.010"
ABOVE 24"	±1/16"	±.015"

ANGULAR DIMENSIONS ± 1°

CHANGES

ISSUE NO 1
CHOKE ADDED
2-10-56
ISSUED PMC

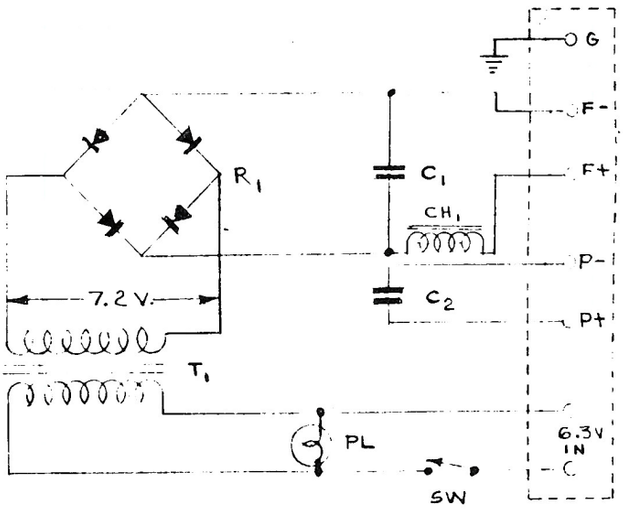

T1--SE-3163 TRANSFORMER
R1--SE-3162 RECTIFIER
C1--SE-3167 CONDENSER, 2000MFD., 15V.
C2--SE-3121 CONDENSER, 30-20-10MFD., 300V.
SW--18641 SWITCH, S.P.S.T.
PL--5701-1-1 6-8V. LAMP
CH1--SE-3199 CHOKE

DO NOT SCALE DRAWING

TITLE	SCHEMATIC SE-7668 POWER SUPPLY		
MATERIAL		FINISH	
DRAWN HUCK	CHKD.	APPVD.	DATE 1-19-56

DRWG. NO. ASE-7668

MOTIOGRAPH INC.
CHICAGO, ILL.

ALTEC SERVICE COMPANY

SE-7668 POWER SUPPLY

5313.21

Printed in U.S.A.

ASE-7669

UNLESS OTHERWISE SPECIFIED

BASIC DIM.	FRAC.	DEC.
UP TO 4"	±1/128"	±.008"
ABOVE 4" TO 6"	±1/64"	±.008"
ABOVE 6" TO 24"	±1/32"	±.010"
ABOVE 24"	±1/16"	±.015"

ANGULAR DIMENSIONS ± 1°

CHANGES

ISSUE NO 1
ADDED CHOKE
2-10-56-HUCK
ISSUE 2.

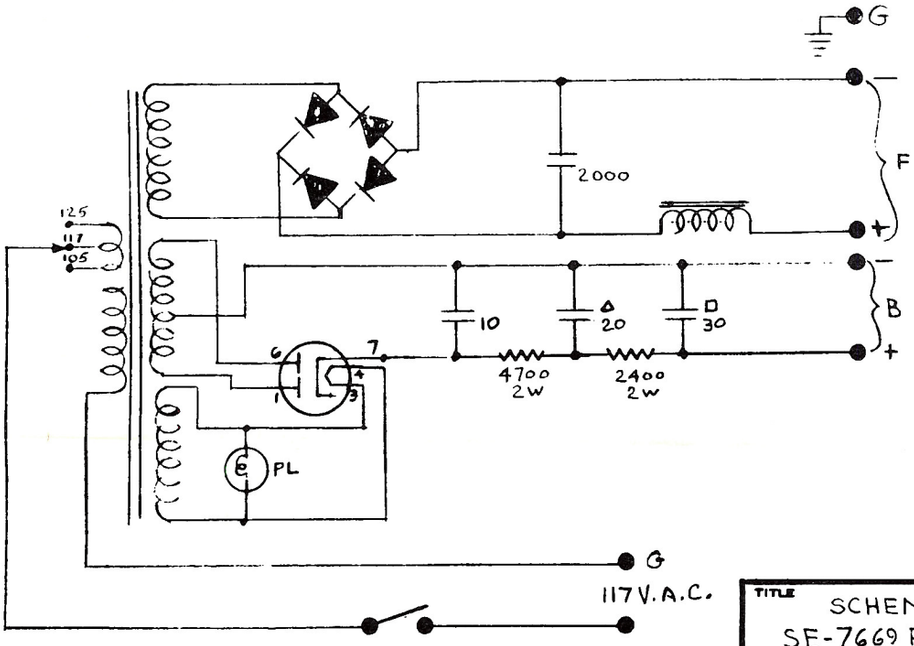

Printed in U.S.A.

DO NOT SCALE DRAWING

TITLE: SCHEMATIC
SE-7669 POWER SUPPLY

MATERIAL		FINISH	
DRAWN HUCK	CHKD.	APPVD.	DATE 1-10-56

DRWG. NO. ASE-7669

MOTIOGRAPH INC.
CHICAGO, ILL.

MOTIOGRAPH

SOUND EQUIPMENT BULLETIN REPRODUCER - HU-K-MK

1. GENERAL - There is very little information available on these reproducers. Some identifying data is given below.

1.1 HU - This model was arranged for direct low-capacity cable connection to the photocells. Mechanically the sound heads can be identified by the presence of a weighted tension roller bracket just above the film guide roller.

1.2 K - Improved version of the HU. Identified by the presence of a cast auxiliary housing on the front of the main housing containing a photocell coupling circuit and volume control potentiometer in the PEC circuit.

1.3 MK - Redesigned K to include the same type of PEC coupling unit and optical system as in W.E. 211 Reproducers.

1.4 MX - Actually an MK unit with an X appearing after the serial number. Optical system and aperture moved up as far as possible because of complaints from the field that when the MK were used with Simplex projectors, the synchronization was "off" in cases where operators could not be persuaded to use a shorter then normal lower film loop. Bracket for tension shoe of the film guide roller goes around the aperture block and PEC housing.

1.5 MK - Mirrophonic - Similar to old MK's, except that the exciter lamps and lens tubes were replaced by the same lamp and lens tube used in the SH-7500 Reproducer.

2. INTERNAL WIRING OF MK REPRODUCER

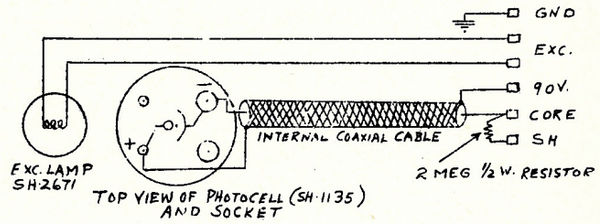

3. REPLACEMENT PARTS - (Always furnish soundhead serial number)

3.1 MX Reproducer

SH-1623 - Short lens tube (W.E. - KS-7871 or TA-4198)
SH-2205 - Lever shoulder screw (Stud for sound sprocket tension shoe bracket, holdback sprocket and guide roller shoe bracket)
SH-2208 - Bracket for sound sprocket
SH-2209 - " " holdback "
SH-2210 - Semi-circular bracket for guide roller shoe
SH-2215 - Impedance roller tension shoe (Guide roller tension shoe)
*SH-2216 - Cylindrical aperture block

3.2 MK Mirrophonic Reproducer - (Refer to photographs and Parts List, pg. 5350.13-5350.20)

SH-2526 - Long lens tube (as used in SH-7500 Reproducer)
*SH-1602 - Aperture cylinder

* When ordering SH-1602 or SH-2216 Aperture Cylinders specify lens tube in use.

ASSOCIATED DRAWINGS

Photographs (6) - MK - Mirrophonic
Parts List - MK - Mirrophonic

Issued by
Engineering Department
Printed in U. S. A.

MODEL "MK" MIRROPHONIC SOUND REPRODUCER

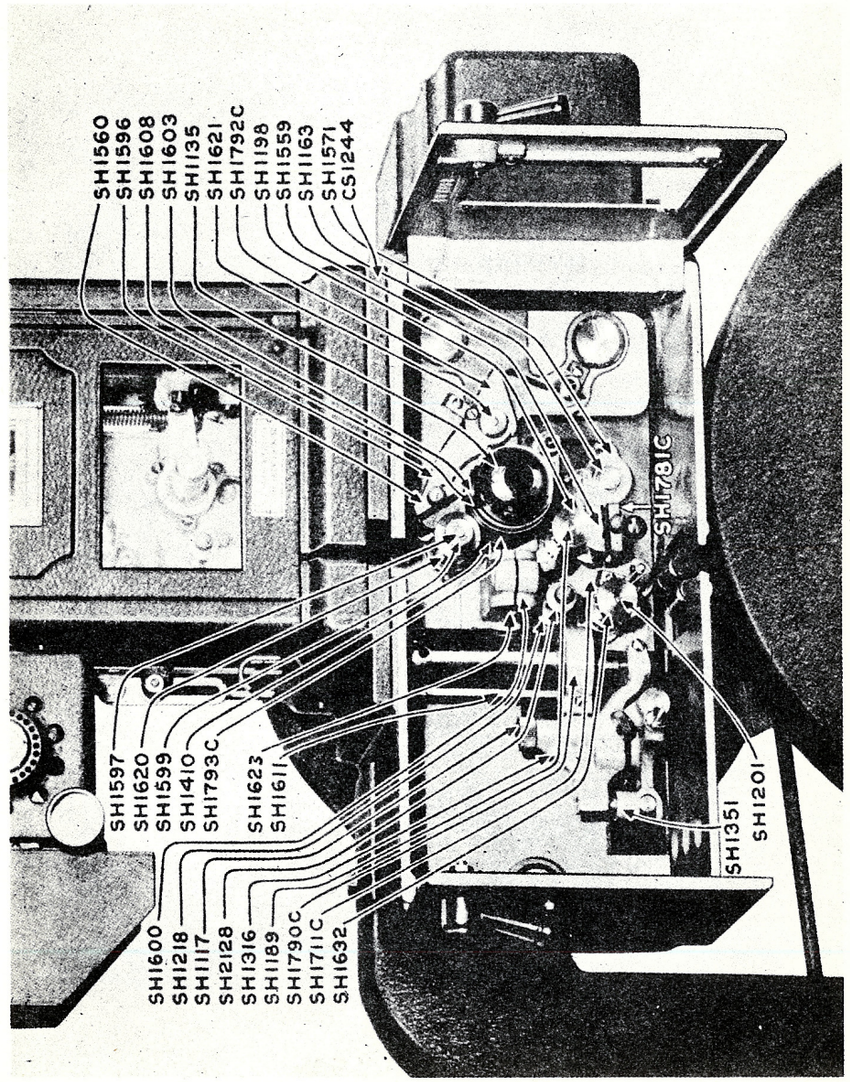

MOTIOGRAPH MODEL "MK" MIRROPHONIC SOUND REPRODUCER
Operating Side View

Printed in U.S.A.

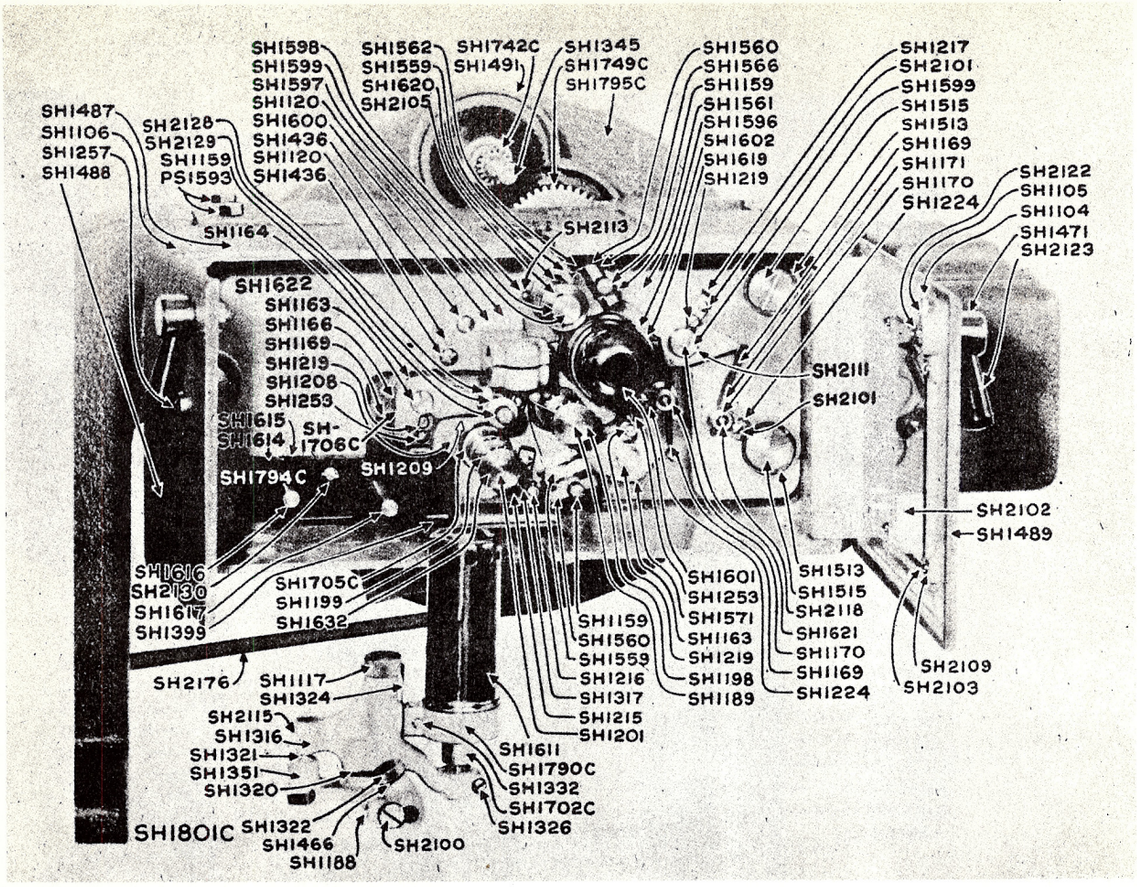

MOTIOGRAPH MODEL "MK" MIRROPHONIC SOUND REPRODUCER
Operating Side View

Printed in U.S.A.

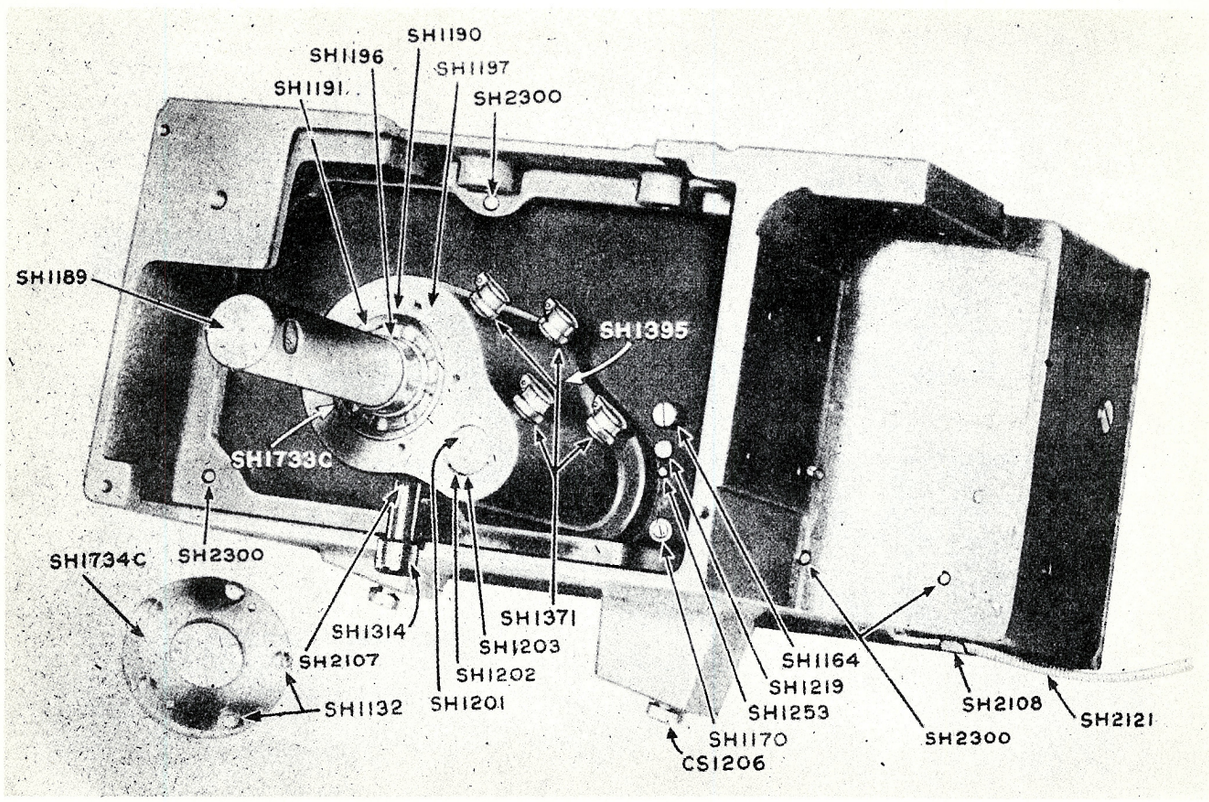

MOTIOGRAPH MODEL "MK" MIRROPHONIC SOUND REPRODUCER
Less Flywheel
Drive Side View

Printed in U.S.A.

ALTEC SERVICE CORPORATION

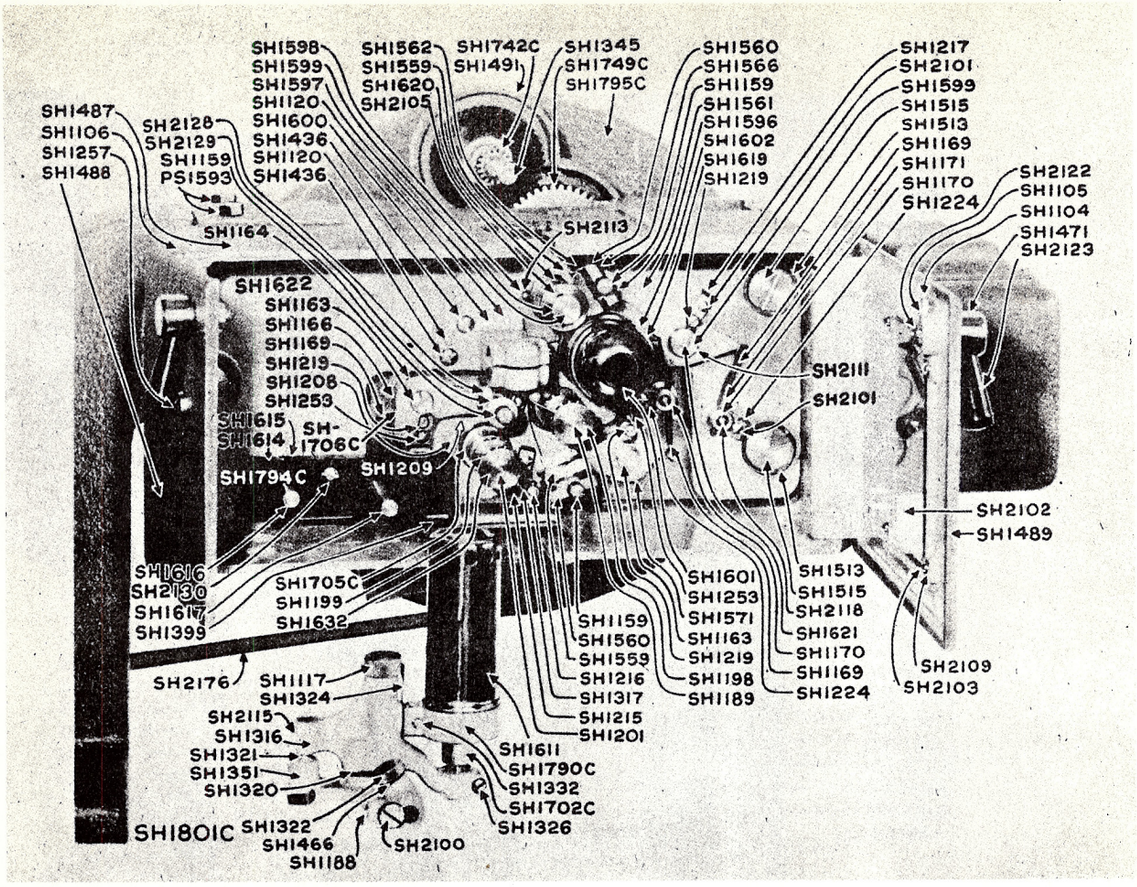

MOTIOGRAPH MODEL "MK" MIRROPHONIC SOUND REPRODUCER
Operating Side View

Printed in U.S.A.

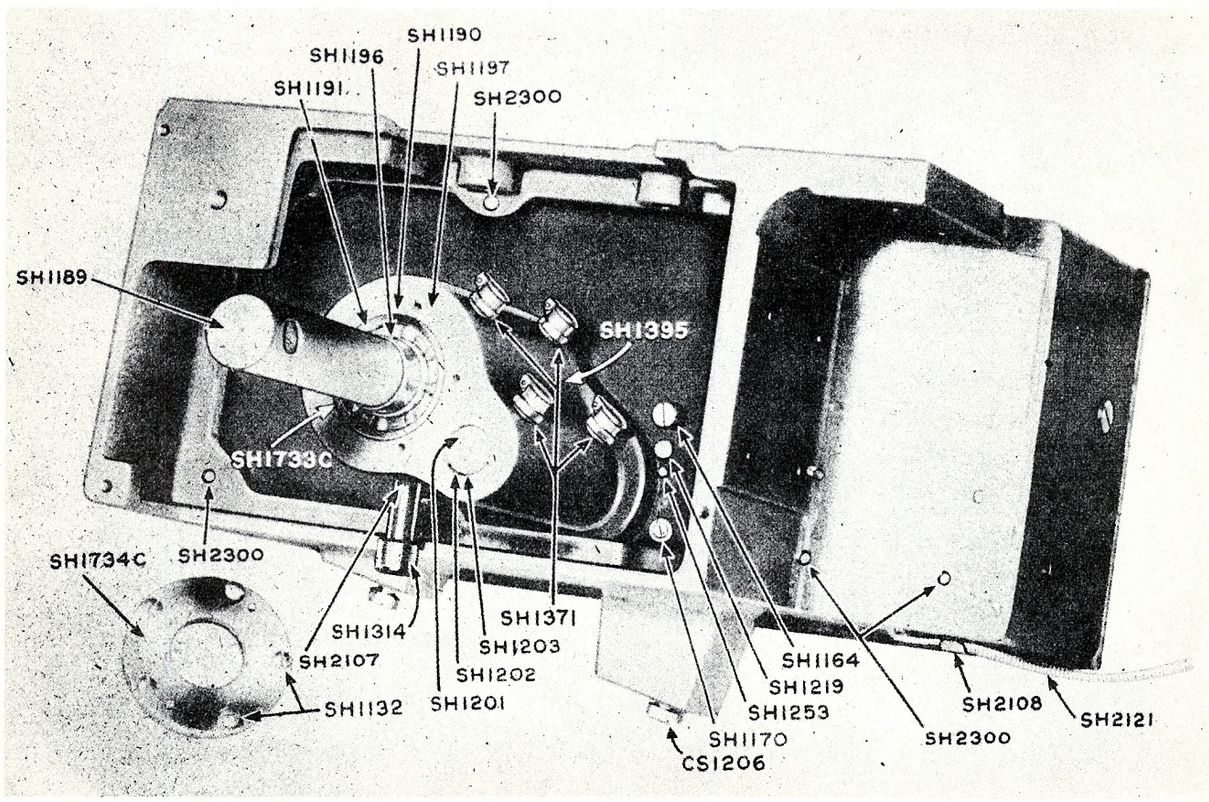

MOTIOGRAPH MODEL "MK" MIRROPHONIC SOUND REPRODUCER
Less Flywheel
Drive Side View

Printed in U.S.A.

ALTEC SERVICE CORPORATION

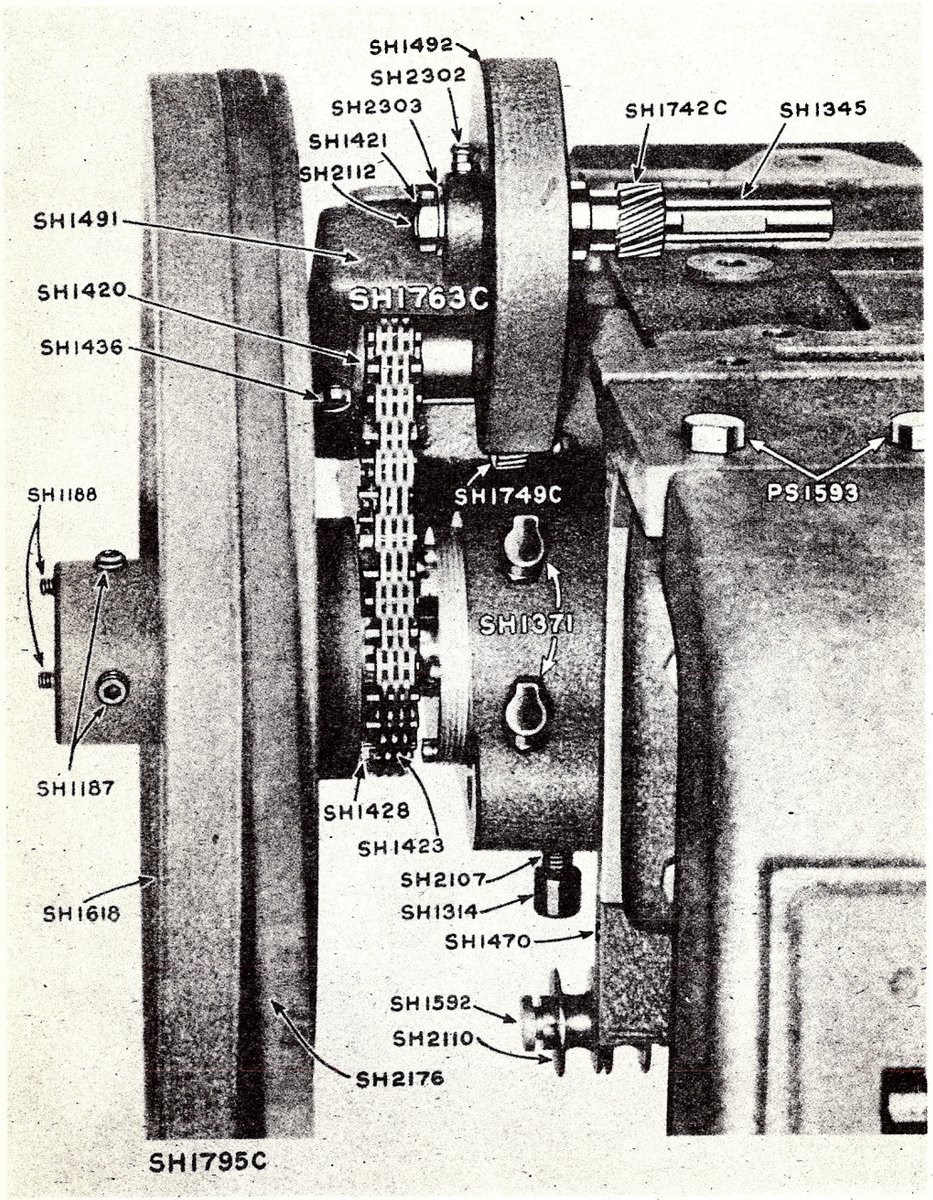

MOTIOGRAPH MODEL "MK" MIRROPHONIC SOUND REPRODUCER
MECHANISM DRIVE

Printed in U.S.A.

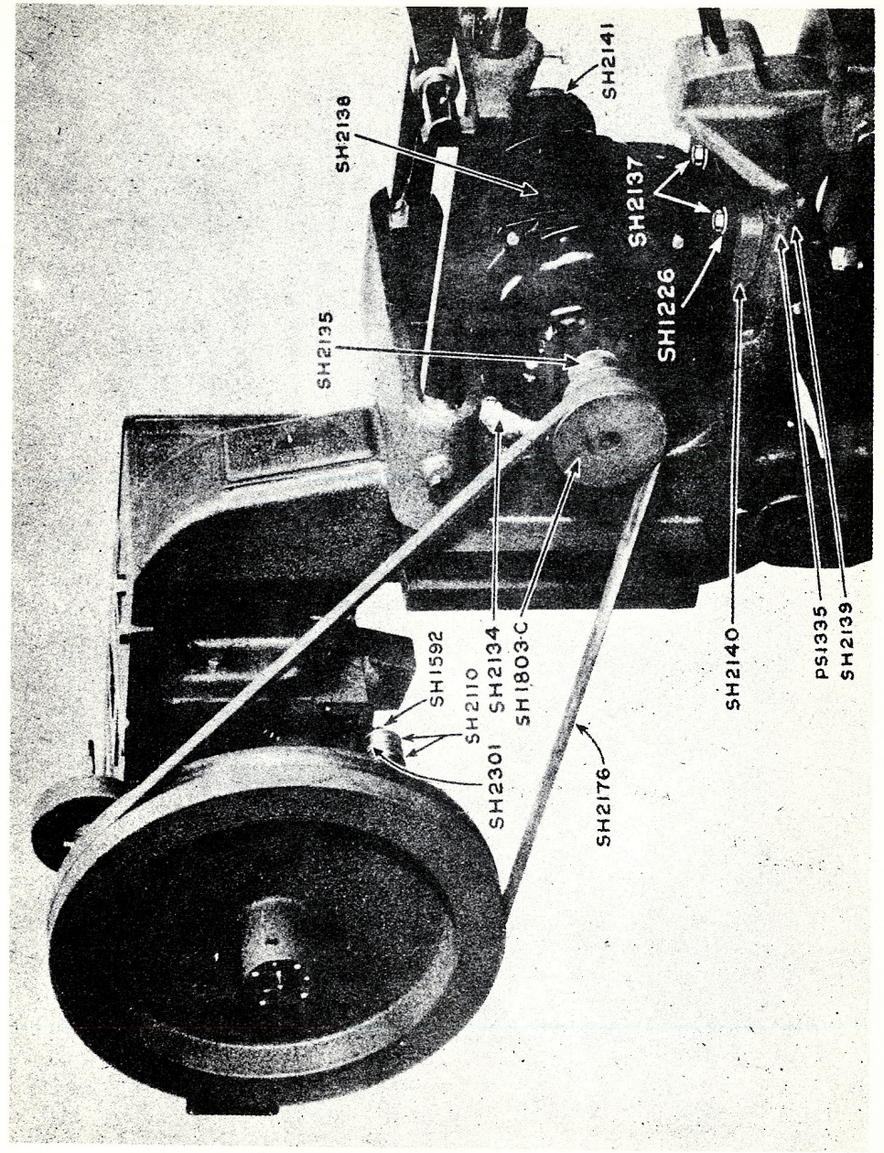

MOTIOGRAPH MODEL "MK" MIRROPHONIC SOUND REPRODUCER MOTOR AND FLYWHEEL

Printed in U.S.A.

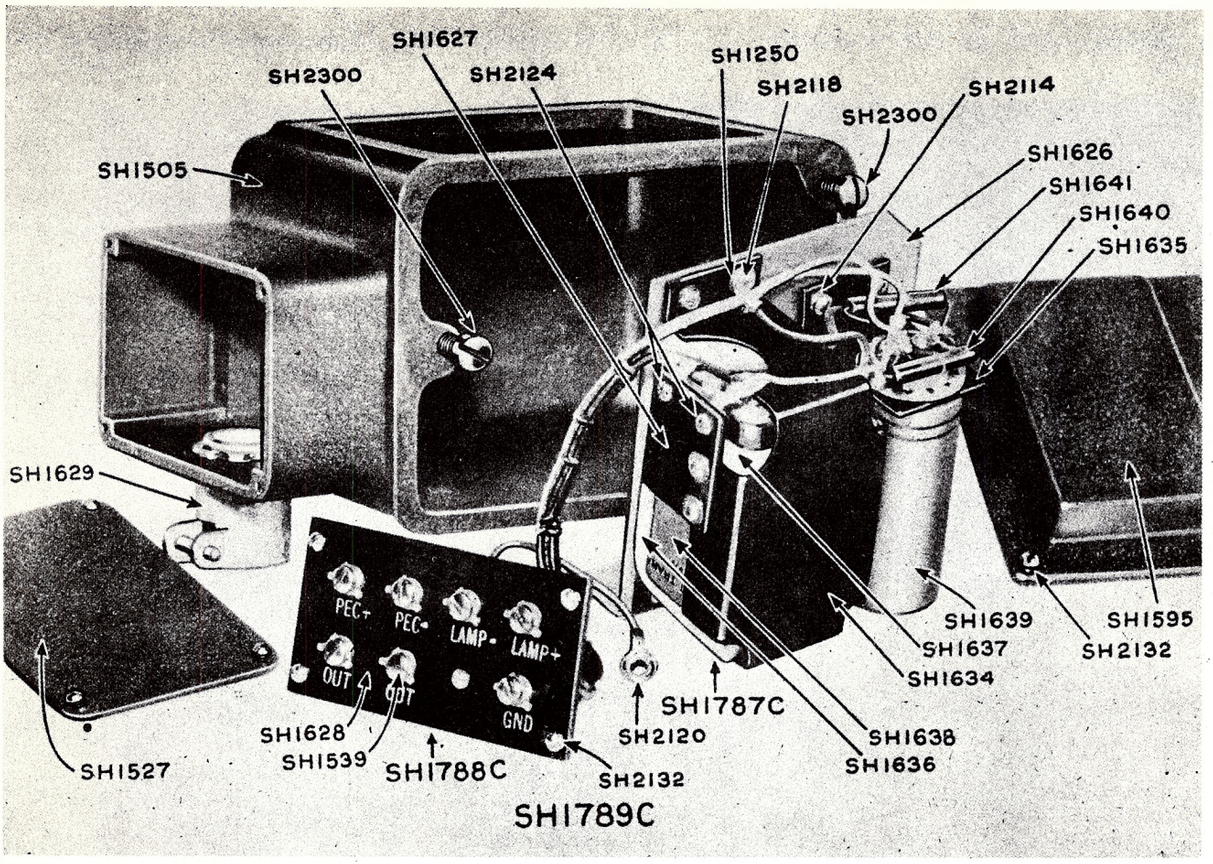

MOTIOGRAPH MODEL "MK" MIRROPHONIC SOUND REPRODUCER COUPLING UNIT

PART NO.	DESCRIPTION	ILLUSTRATION PAGE NO.
SH-1104	Door Latch	2
SH-1105	Door Latch Spring	2
SH-1106	Door Hinging Screw	2
SH-1117	Vertical Adjusting Screw for Exciter Lamp Bracket	1 - 2
SH-1120	Dowel Pin for Lens Mounting Bracket	2
SH-1123	Exciter Lamp Socket (see SH-1702-C)	*
SH-1124	Exciter Lamp Socket Contact (see SH-1702-C)	*
SH-1125	Exciter Lamp Socket Bushing (counter-bored) (see SH-1702-C)	*
SH-1126	Exciter Lamp Socket Bushing (plain) (see SH-1702-C)	*
SH-1127	Exciter Lamp Bracket Coil Spring (see SH-1702-C)	*
SH-1128	Clip for Contact Plunger (see SH-1702-C)	*
SH-1132	Screw	3
SH-1135	Photo-Electric Cell	1
SH-1159	Handle Screw for Tension Pad	2
SH-1163	Guide Roller & Tension Pad Lever Screw	1 - 2
SH-1164	Nut for SH-1163 Screw	2 - 3
SH-1166	Lever for Film Guide Roller	2
SH-1169	Spring for Roller Lever	2
SH-1170	Lever Spring Stud	2 - 3
SH-1171	Washer for SH-1170 Stud	2
SH-1172	Screw to lock Washer	*
SH-1187	Set Screw for Fly-Wheel	4
SH-1188	Lock Screw for Set Screw	2 - 4
SH-1189	Main Shaft	1 - 2 - 3
SH-1190	Main Shaft Bearing (small)	3
SH-1191	Main Shaft Bearing (large)	3
SH-1194	Felt Retainer for Main Bearing (small) (see SH-1734-C)	*
SH-1195	Felt Retainer for Main Bearing (large) (see SH-1733-C)	*
SH-1196	Spacer for Bearings	3
SH-1197	Steel Hold-Back Drive Gear	3
SH-1198	Sound Sprocket	1 - 2
SH-1199	Taper Screw for Sound Sprocket	2
SH-1201	Hold-Back Sprocket Shaft	1 - 2 - 3
SH-1202	Bearing Bushing for Hold-Back Sprocket Shaft (large)	3
SH-1203	Bearing Bushing for Hold-Back Sprocket Shaft (small)	3
SH-1208	Gear Cover Plate	2
SH-1209	Screw to attach Cover Plate	2
SH-1215	Support Casting for Stripper Plate Details	2
SH-1216	Stripper Plate Post	2
SH-1217	Retaining Clamp	2
SH-1218	Guide Roller Shaft	1
SH-1219	Eccentric Stop Stud	2 - 3
SH-1224	Retaining Clamp for Spring Stud	2
SH-1226	Washer for Motor Mounting Screw	5
SH-1246	Screw to attach Felt Retainer to Main Frame Mounting Plate	*
SH-1247	Screw to attach Small Retainer to Main Frame Mounting Plate	
SH-1250	Terminal	6
SH-1251	Screw to secure Shaft in Film Guide Roller Lever	*
SH-1252	Screw for SH-1224 Clamp	*
SH-1253	Screw to clamp Eccentric Stop Stud	2 - 3
SH-1257	Ruby Glass for Exciter Lamp Door	2
SH-1265	Wrench for SH-1187 Set Screw	*
SH-1314	Cap for SH-2107 Nipple	3 - 4
SH-1316	Exciter Lamp Bracket (upper member)	1 - 2
SH-1317	Stripper Plate	2
SH-1320	Vertical Shaft for Exciter Lamp Bracket	2
SH-1321	Guide Shaft for Exciter Lamp Bracket	2
SH-1322	Thumb Screw for locking Exciter Lamp Horizontal Adjustment	2
SH-1324	Leaf Spring for Vertical Adjusting Screw	2
SH-1325	Screw to attach Leaf Spring	*
SH-1326	Clamping Screw for Exciter Lamp Socket	2
SH-1332	Screw to clamp SH-1612 Exciter Lamp Shield Support Band	2
SH-1337	Lock Washer	*
SH-1345	Shaft for SH-1742-C Gear	2 - 4
SH-1351	Exciter Lamp Bracket (lower member)	2 - 1
SH-1371	Oil Cup for Sound Support	3 - 4
SH-1395	Sound Reproducer Main Frame Mounting Plate	3
SH-1399	Contact Spring for Exciter Lamp	2
SH-1410	Dowel Pin for Aperture Cylinder	1
SH-1420	Shaft for SH-1741-C Gear & Sprocket	4
SH-1421	Special Nut for SH-1345 Shaft	4
SH-1423	Mechanism Drive Chain	4
SH-1424	Screw to attach SH-1491 Bracket to Sound Reproducer	*
SH-1425	Washer for SH-1424 Screw	*
SH-1428	Twenty-Two Tooth Sprocket for Mechanism Drive	4
SH-1432	Round Take-Up Belt (for Simplex Projector)	*
SH-1433	Screw to attach SH-1428 Sprocket to Flywheel	*
SH-1436	Screw to attach SH-1420 Shaft to SH-1491 Bracket	2 - 4
SH-1437	Screw to attach Guard to SH-1491 Bracket	*
SH-1438	Belt Clip	*
SH-1439	Washer for SH-1437 Screw	*
SH-1452	Set Screw for SH-1420 Shaft (same as SH-1436)	*
SH-1466	Coil Spring for Exciter Lamp Bracket	2
SH-1470	Bracket for Take-Up Belt Idler	4
SH-1471	Door Knob	2
SH-1487	Sound Reproducer Housing	2
SH-1488	Door (Small)	2
SH-1489	Door (Large)	2
SH-1491	Gear Bracket	2 - 4
SH-1492	Gear Guard for SH-1491 Bracket	4
SH-1505	Coupling Unit Housing	6
SH-1513	Rubber Bushing for SH-1622 Mounting Plate	2
SH-1515	Shoulder Screw for SH-1622 Mounting Plate	2
SH-1527	Terminal Cover Plate for Coupling Unit Housing	6
SH-1539	Terminal Screw	6
SH-1559	Film Tension Shoe	1 - 2
SH-1560	Tension Plate for SH-1559 Tension Shoe	1 - 2
SH-1561	Shoulder Screw for SH-1559 Tension Shoe	2
SH-1562	Coil Spring for Shoulder Screw	2
SH-1566	Hexagon Head Set Screw	2
SH-1568	Photo-Electric Cell Lead (2 conductor)	*
SH-1571	Sound Sprocket Tension Shoe Lever for SH-1560 Tension Plate	1 - 2
SH-1592	Idler Roller Shaft	4 - 5
SH-1595	Cover for SH-1505 Housing	6
SH-1596	Film Roller Tension Shoe Lever	1 - 2
SH-1597	Shaft for Film Guide Roller (large)	1 - 2
SH-1598	Bushing for SH-1597 Shaft	2
SH-1599	Collar for SH-1597 Shaft	1 - 2
SH-1600	Bracket for mounting SH-1623 Lens Assembly	1 - 2
SH-1601	Shield for Photo-Electric Cell	2
SH-1602	Aperture Cylinder	2
SH-1603	Sponge Rubber for SH-1601 Shield	1
SH-1604	Gasket for SH-1608 Socket	*
SH-1605	Insulating Washer for SH-1607 Shield	*
SH-1606	Insulating Strip for SH-1607 Shield	*
SH-1607	Shield for SH-1608 Socket	*
SH-1608	Socket (4 prong)	1
SH-1609	Plate for SH-1608 Socket	*
SH-1610	Lock Spring for SH-1608 Socket	*
SH-1611	Exciter Lamp Shield	1 - 2
SH-1612	Band for Shield (see SH-1790-C)	*
SH-1613	Guide Pin for SH-1612 Band (see SH-1790-C)	*

*Not Illustrated

Issued by
Engineering Department
Printed in U.S.A.

5350.20

PART NO.	DESCRIPTION	ILLUSTRATION PAGE NO.
SH-1614	Insulating Block	2
SH-1615	Slide Pin for Insulating Block	2
SH-1616	Slide Rod for Insulating Block (short)	2
SH-1617	Slide Rod for Insulating Block (long)	2
SH-1618	Flywheel for V-Belt Drive	4
SH-1619	Location Lock Pin for SH-1601	2
SH-1620	Film Guide Roller (large)	1 - 2
SH-1621	Shaft for SH-1596 Film Roller Tension Shoe Lever	1 - 2
SH-1622	Cushioned Mounting Plate	2
SH-1623	Lens Assembly	1
SH-1624	Exciter Lamp	*
SH-1626	Mounting Plate for SH-1787-C Coupling Unit	6
SH-1627	Terminal Strip for SH-1638 Transformer	6
SH-1628	Terminal Strip for Coupling Unit	6
SH-1629	3/4" Greenfield Connector	6
SH-1632	Hold-Back Sprocket	1 - 2
SH-1634	Mounting Shield for Transformer	6
SH-1635	Bracket for Condenser	6
SH-1636	Felt Transformer Cushion (narrow)	6
SH-1637	Felt Transformer Cushion (wide)	6
SH-1638	Output Transformer	6
SH-1639	Condenser	6
SH-1640	Resistor	6
SH-1641	Resistor	6
SH-1642	Lead (Yellow) for SH-1787-C Coupling Unit	*
SH-1643	Lead (Brown) for SH-1787-C Coupling Unit	*
SH-1645	Washer for SH-1788-C Terminal Strip	*
SH-1647	Cable Clamp for Coupling Unit Cable Form	*
SH-1648	Clamp for SH-1170 Stud	*
SH-1649	Clamp to attach SH-1602 Aperture Cylinder	*
	<u>Assembled Units</u>	
SH-1702-C	Exciter Lamp Socket & Bushings	2
SH-1705-C	Bakelite Hold-Back Sprocket, Driven Gear & Hub	2
SH-1706-C	Film Guide Roller Lever & Shaft	2
SH-1711-C	Stripper Plate & Mounting	1
SH-1733-C	Felt Retainer (small) for Main Shaft	3
SH-1734-C	Felt Retainer (Large) for Main Shaft	3
SH-1736-C	Stripper Plate & Shaft	*
SH-1742-C	Forty-Tooth Bakelite Gear & Seventeen-Tooth Pinion	2 - 4
SH-1749-C	Forty-Tooth Steel Gear & Seventeen-Tooth Chain Sprocket	2 - 4
SH-1763-C	Mechanism Drive Assembly (complete)	4
SH-1765-C	Sound Reproducer Housing & Doors	*
SH-1781-C	Tension Shoe & Lever for Take-Up Sprocket	1
SH-1782-C	Sound Reproducer Main Frame Mounting Plate	*
SH-1787-C	Coupling Unit	6
SH-1788-C	Coupling Unit Terminal Strip (Complete)	6
SH-1789-C	Coupling Unit (Complete)	6
SH-1790-C	Exciter Lamp Shield Band & Guide Pin	1 - 2
SH-1791-C	Cushioned Mounting Plate (Complete)	*
SH-1792-C	Tension Shoe & Lever for Film Guide Roller (large) (complete)	1
SH-1793-C	Aperture Cylinder & Pin	1
SH-1794-C	Exciter Lamp Insulated Mounting (complete)	2
SH-1795-C	Flywheel with Twenty-Two Tooth Sprocket	2 - 4
SH-1797-C	Transformer Terminal Strip (complete)	*
SH-1801-C	Exciter Lamp Bracket (complete)	2
SH-1803-C	Adjustable Pulley	5
SH-2100	Stop Screw for Exciter Lamp Bracket	2
SH-2101	Screw to attach SH-1217 Clamp	2
SH-2102	Glass for Door	2
SH-2103	Retaining Clip for Door Glass	2
SH-2104	Lock Screw	*
SH-2105	Set Screw	2
SH-2106	Screw	*
SH-2107	Nipple for SH-1395 Mounting Plate	3 - 4
SH-2108	Cable Clamp for SH-2121 Exciter Lamp Armored Cable	3
SH-2109	Screw for Door Glass Retaining Clip	2
SH-2110	Idler Roller	4 - 5
SH-2111	Brass Slug	2
SH-2112	Taper Plug for SH-1345 Shaft	2
SH-2113	Screw	2
SH-2114	Lock Washer	6
SH-2115	Set Screw	2
SH-2116	Rivet Pin for Model Plate	*
SH-2117	Screw	*
SH-2118	Screw	2 - 6
SH-2119	Screw	*
SH-2120	Terminal for Ground Lead	6
SH-2121	Armored Exciter Lamp Cable	3
SH-2122	Hexagon Nut	2
SH-2123	Handle for Door	2
SH-2124	Screw	6
SH-2125	Model Plate	*
SH-2126	Screw for SH-1216 Stripper Plate Post	*
SH-2127	Screw	*
SH-2128	Guide Roller	1 - 2
SH-2129	Spacer for SH-2128 Roller	2
SH-2130	Screw	2
SH-2131	Hexagonal Nut	*
SH-2132	Screw	6
SH-2133	Greenfield Connector (straight)	*
SH-2134	Greenfield Connector (90 degree)	5
SH-2135	Hollow Head Set Screw	5
SH-2136	Washer for SH-2139 Screw	*
SH-2137	Hexagon Head Screw	5
SH-2138	Sound Reproducer Motor	5
SH-2139	Screw to attach Motor to Main Frame	5
SH-2140	Motor Mounting Plate	5
SH-2141	Hand Wheel for Motor	5
SH-2176	Drive Belt	2 - 4 - 5
SH-2300	Main Frame Mounting Screw	3 - 6
SH-2301	Idler Roller Spacer Washer	3 - 5
SH-2302	Oil Cup	4
SH-2303	Drive Shaft Washer	4

*Not Illustrated

Issued by
Engineering Department
Printed in U.S.A.

1. DESCRIPTION

1.1 The Reproducer is finished externally in wrinkle gray and internally in white enamel, having the exciter lamp compartment at the rear and film compartment at the front, with facilities for attaching a SH-2544 Bracket on the drive side. Dimensions 8-3/4" H X 10" D X 15-1/2" W. Weight 96 lbs.

2. INSTALLATION - ("Item" numbers refer to numbers on associated Stock List, WE-7522, and Assembly Drawing WE-7521.)

2.1 Pedestals - (Sound Head Support Brackets). (Order from pedestal manufacturer except where noted.)

2.11 Motiograph HU - Mount reproducer directly on pedestal.
2.12 Motiograph K and S - PS-1475 Bracket
2.13 Motiograph H - Replace PS-600 support casting by PS-2011-C
2.14 Simplex type 3 and 5 point (new) - Simplex A-169-L Pedestal Arm. (Motiograph will supply support arms, on request, for existing common Simplex type 3 & 5 point pedestals)
2.15 Simplex type M and R - Simplex A-170-L Pedestal Arm
2.16 Super-Simplex type and Simplex SI type - S-1184-L Sound Head Support.
2.17 Brenkert BX-12 - BX-2187 Bracket
2.18 Brenkert BX-10 - BX-2185 Bracket
2.19 Century L, C-D, Imp. 5 Point, and Deluxe - Century S-6184-L Sound Head Support
2.20 Ballantyne "Soundmaster" - Ballantyne S-303 Bracket

2.2 Takeup Assembly

2.21 Simplex - Use SH-2669 Takeup Drive Pulley and SH-2727 Spring as replacements for original corresponding items. With W-29 or W-30 Takeups use takeup pulley ASL-13817.

2.22 Motiograph - Replace TU-707 Assembly with TU-716 (Item 160) (TU-725 - Available 1945)

3. GENERAL - Applies to all types of projectors except where noted.

3.1 SH-2670 Adapter Plate (Item 116) - Remove from the top of the reproducer, and remove the shipping guard from the stabilizer shaft; save screws and washers for mounting motor bracket. Return shipping guards to Motiograph, Inc. for credit.

3.11 With Motiograph Projectors, (except AA), fasten the CS-1448 Mechanism Plate (Item 163), supplied with mechanisms or reproducers, to the SH-2670 Adapter Plate (Item 116) with the Item 161 screws. Before tightening screws firmly, place the assembly on reproducer and align screw holes in mechanism plate and reproducer. Remove the assembly and tighten screws (Item 161), securely. Replace the assembly on the reproducer and insert three of the Item 97 fastening screws through the accessible adapter plate mounting holes. Tighten screws firmly.

3.12 With Simplex type Projectors (includes Motiograph AA), fasten the SH-2670 Adapter Plate (Item 116), to the Simplex Mechanism with the SH-2680 Oil Shield (Item 117), between, using the original mechanism mounting screws. Locate the mechanism base squarely against the shoulder of the adapter plate, and with a distance of 3-7/8" (4-1/4" for Super-Simplex) from the operating side of the mechanism base to the operating side of the adapter plate. It is important that this dimension be correct to insure proper alignment in the film path.

3.2 SH-7030 Mechanism Drive Sprocket Assembly (Item 144) - Insert in the mechanism. Thread the oil cup into the end of the shaft from the operating side of the mechanism, turning the shaft with a screw driver. Rotate the shaft until its flat is in alignment with the locking screw in the mechanism bearing. Tighten the screw firmly after pushing the shaft inward to its seat. Turn the oil cup to an upright position. Drill out the shaft hole if required in older mechanisms. A few SH-7028 Mechanism Drive Sprocket Assemblies have been supplied to the field in place of the SH-7030 Assemblies for stock reasons. They are identical except that the shaft is Part No. SH-2681 and the drive pinion is Part No. SH-2684. They may be identified from the spiral oil grooves in the shafts; SH-7030 Assemblies have a single straight oil groove.

3.21 With Motiograph Model HK Projector it is only necessary to replace the existing drive chain sprocket on the mechanism shaft with the new Item 152 Sprocket.

3.3 Install the SH-2532 Drive Chain Sprocket (Item 111) on the reproducer shaft just below the takeup belt pulley if it is not already mounted. Place the projector mechanism and attached adapter plate on the reproducer set so that the adapter plate drops into the machined guide. Slide the mechanism forward so that the SH-2543 Drive chain (Item 113) can be placed over and around upper and lower chain sprockets. Slide the mechanism back to its proper position, aligning the screw holes in the adapter plate with those in the reproducer set. Tighten the mounting screws. Align drive chain sprocket on its shaft with mechanism chain sprocket using a straight edge; tighten the lower sprocket set screw securely.

Issued by
Engineering Department
Printed in U. S. A.

3.31 With Motiograph Model HK Projector, use SH-7038 Projector Drive, Gear and Sprocket Assembly (Item 147) and SH-2698 Projector Drive Chain (Item 153). Install the SH-7039 Bakelite Idler Gear Assembly (Item 148) on the reproducer shaft just below the takeup belt pulley. Make certain that the Item 16 Woodruff key is in place, and that Item 158 Allen set screw clears shaft flat. Do not tighten set screw until gears are aligned. Assemble Item 150 bracket, Item 151 shaft, and Item 147 drive gear and chain sprocket. Use Allen set screw Item 159, to lock shaft, and screw CS-1154 Oil Cup into shaft oil hole. Fasten the Assembly to the reproducer wall with screws and washer, Items 154 and 157. Carefully align Item 148 gear and the drive gear of Item 147. Turn the reproducer over by hand to make certain the gears do not bind at any point and that teeth are properly engaged. Tighten the bracket mounting screws and the idler gear set screw firmly.

3.32 Model K Motiograph Mechanisms are provided with an adjustment to raise or lower the drive gear train assembly so as to provide correct mesh with drive gears of certain older types of sound reproducers. When Model K Mechanisms are used with SH-7500 Reproducers this adjustment should be at approximately the middle of its travel in order to allow sufficient slack in the silent link chain connecting the reproducer and the projector mechanism. If the adjustment is at the upper end of its travel it will be found that there is no slack in the chain when the mechanism is placed in its normal position. The slack should be such as to permit adjustment of the SH-7015 Drive Chain Idler Bracket Assembly (Item 129) to a point where the drive chain runs smoothly without whipping, and the bakelite idler roller contacts the chain with just sufficient force to insure rotation of the roller. The drive gear train assembly adjustment consists of two screws set into the base casting just below the left rear half door. Screw nearest the mechanism center frame is tapped into the base casting and pushes down against the gear train casting. The large headed screw next to it is a clearance fit in the base casting, but is tapped into the gear train casting. Thus by tightening one screw and loosening the other, the gear train casting can be raised or lowered as desired. With both screws tight the casting is rigidly locked and of course must be so for normal operation of the projector mechanism.

3.4 Mount the SH-7015 Drive Chain Idler Bracket Assembly (Item 129) on the reproducer set and set it temporarily for minimum chain tension.

3.41 On Motiograph Model HK Projector use SH-7040 Assembly (Item 174).

3.5 Mount the lower magazine to the frame of the reproducer set, using the SH-2693 Mounting Screws (Item 99) supplied with the reproducer. Install the SH-7017 Oil Pan Assembly (Item 92) between the magazine and the reproducer.

3.6 Install the SH-7014 Takeup Belt Idler Assembly (Item 128) on the reproducer set, using Item 97 screws. Locate bracket at extreme position toward pedestal point.

3.7 Install the SH-2674 Takeup Belt (Item 115). Shorten belt as required. After installation, adjust idler assembly (Item 128) to give sufficient tension for positive drive of the takeup assembly.

3.8 Motor SH-2673 is shipped completely assembled to the motor bracket assembly. Before mounting the motor bracket to the reproducer frame, slip Motor Coupling SH-2522 on the motor shaft. Mount motor bracket to reproducer frame, using screws and washers, Items 100 and 101, at the same time slipping motor coupling over the drive shaft of the reproducer. Make certain that the bracket is square against the frame. With the motor bracket in its proper position, there should be free movement of the motor coupling over both shafts. With proper alignment, securely tighten both motor coupling set screws against flats on both shafts. Two bracket mounting screw holes have been slotted and the center hole has been tapped to permit the bracket to be installed or removed without disturbing the stabilizer assembly. Rotation CCW viewed from dead end.

3.9 Install stabilizer as follows:

(a) On operating side remove SH-7004 Mirror Assembly (Item 33).
(b) Loosen Impedance Drum Assembly Retaining Clip (Item 26), and swing 90 degrees and retighten.
(c) Lift Impedance Roller Assembly (Item 32) and withdraw Impedance Drum Assembly (Item 38) approximately 2 inches from normal position.
(d) Insert impedance drum assembly shaft into stabilizer, advancing impedance drum assembly into its normal position.
(e) Lock stabilizer on shaft with Item 43 nut.
(f) Restore impedance drum assembly retaining clip and lens mirror assembly to their normal position.

3.91 To remove stabilizer, reverse the above procedure. The stabilizer may also be installed or removed by removing the motor from its cradle; in this way neither the stabilizer shaft nor the motor bracket alignment is disturbed. Loosen motor coupling set screws and loosen and remove the clamps holding the motor in its cradle. In replacing motor in the cradle, tighten the clamps to their maximum tightness.

4. ADJUSTMENTS

4.1 The SH-7005 and SH-7006 Pad Roller Assemblies can be adjusted for lateral alignment with the sprocket by means of the knurled nuts on their pivot shafts after loosening the locking screws in the center of the nuts. The adjustment should be such that the flanges of the pad rollers clear the sprocket faces.

For proper film clearance adjust by first loosening the two main mounting screws which secure the pad rollers to the wall of the reproducer. Then loosen one of the screws along side the adjusting stud, which is found to the left of the pad roller assembly, and tighten the other. When proper clearance of two thicknesses of film has been obtained, tighten the main mounting screws firmly.

4.2 Check the path of the light beam from the lens tube Item 41, through the lens and mirror assembly Item 33, and the collector lens assembly mounted on the P.E.C. Bracket, making sure that the image of the slit is centered within the collector lens. To center the light beam on the collector lens, loosen the two screws holding the mirror insert in lens and mirror assembly Item 33, and rotate mirror insert for proper position and retighten screws. The image of the slit is focused on the collector lens by slightly loosening the two mounting screws (Item 68), fastening the lens and mirror assembly Item 33, and sliding the assembly toward or away from the film. When properly positioned, retighten screws Item 68. The collector lens assembly should be adjusted so that the light beam falls on the cathode of the photoelectric cell without interference from the anode. Adjust the front P.E.C. Bracket mounting screws so that the light beam from the lens tube just clears the edge of the impedance drum film carrying roller.

4.3 Adjust the lens tube assembly for maximum response with a 7000 or 8000 cycle film.

5. LUBRICATION

5.1 Shaft bearings in the SH-7500 Reproducer are ball bearing type requiring no additional lubrication during the life of the bearing.

5.2 Daily, or before each period of operation, apply one drop of mechanism oil to the following points:

(a) Oil holes in pad rollers on SH-7027 Sound Sprocket.
(b) Sides of projector mechanism drive chain idler roller.
(c) Sides of takeup belt idler pulleys.

5.3 Once per week of normal operation:

(a) Fill the two oil tubes which lubricate the reproducer drive gears.
(b) Apply a few drops of oil to the projector mechanism drive chain.
(c) Apply one drop of oil to the oil holes in the bracket arm of the impedance roller assembly (Item 32), the oil holes in the two pad roller bracket arms, and the oil hole in the SH-7013 Idler Roller Assembly (Item 59). The idler roller assembly is equipped with an Oilite bushing requiring only infrequent lubrication.

5.4 Once each six to eight months of normal operation, oil the motor bearings with a good grade of light automobile oil. Take care that only enough oil is supplied to saturate the wool packing in the bearings. Excessive oiling will cause rapid deterioration of the rubber cushion supports and of the starting switch inside the motor.

6.

6. CLEANING

6.1 Great care must be exercised in cleaning the mirrors in the lens and mirror assembly. The rhodium plating may be damaged by the use of such solvents, as acetone, alcohol, carbon tetrachloride, etc. For regular cleaning, it is best that a soft lens paper be used, being careful that no sharp implement is used that may scratch the surface of the mirror. If considerable oil gathers in the lens, it is suggested that the whole assembly be removed and immersed in gasoline, then thoroughly wiped off with a soft cloth, and the mirror polished with lens paper.

7. PUSH-PULL MODIFICATIONS

7.1 Equipment Changes:

7.11 The SH-2572 Lens is omitted from the SH-7018 Collector Lens Assembly, thus permitting the light from the reproducer optical system to reach the photocell as a long narrow line instead of a round spot.

7.12 The SH-2725 Photocell is replaced with an RCA #920 or Cetron #CE-21 Twin Element Photocell. A clamping device is provided on the photocell socket to hold the cell rigidly in alignment with the reproducer optical system.

7.13 The terminal strip is replaced by an assembly containing, in addition to the usual terminals for exterior cable connections, a network of condensers and resistors for coupling and balancing purposes, a potentiometer for balancing the outputs from the two halves of the push-pull coupling circuit, and a switch to change from single track ("standard") to "push-pull" reproduction.

7.14 Due to the somewhat lower sensitivity of the twin-element photocells as compared with standard cells, and because of losses in the coupling network, the output level of the modified reproducers is lower than that from standard ones. When the reproducers are used with TA-7466-A and TA-7467-A Amplifiers, this is compensated by increasing the photocell polarizing voltage by replacing R-14 and R-17 100,000

ohm resistors in the TA-7466-A Amplifier with 50,000 ohm resistors. This change will already have been made where modified reproducers and amplifiers are shipped together as part of a complete sound system. The voltage to ground at the reproducer "90 V." terminal should be approximately 100 volts, as measured with a 20,000 ohm/volt meter, 1000 volt scale,

7.2 Adjustments

7.21 The longitudinal position of the SH-7004 Lens Mirror Assembly and the reflection angle are adjusted so that the light beam is focussed as a narrow line approximately centered across the two cathodes of the twin photocell. The SH-7018 Collector Lens Assembly, which now serves only as a shield for the light beam, is adjusted so that the beam passes through it without interference.

7.22 With push-pull film running through the machine the angular position of the SH-7002 P.E.C. Bracket, and the lateral position of the SH-7003 Impedance Roller Assembly should be adjusted so that the light beam from the lens tube is exactly centered on the push-pull sound track, with the track just clearing the edge of the impedance drum. This may be observed by looking at the film from the front as it passes over the impedance drum assembly. If the angular position of the bracket is changed appreciably, the adjustments in 7.21 of this section should be rechecked.

7.3 Balancing - There are two methods for adjusting the push-pull optics and circuit for proper balance. Both require a section of film, or film loop, having recorded on it a single frequency of constant amplitude not higher than 3 KC (1 KC is preferred), and an output meter connected to the amplifier.

7.31

7.31 The first method uses standard film (not push-pull), and presupposes that the distance from the sound track edge of this film to the center of its sound track is exactly the same as the corresponding dimension of the push-pull films to be run. Experience indicates that this unfortunately is not always the case, so before using this method, representative push-pull films from those to be run, should be checked against the standard frequency film being used for balancing purposes.

7.31

7.311 Set the potentiometer on the side of the terminal strip assembly to the middle of its travel.

7.312 With the standard frequency films running through the reproducer, and with the terminal strip switch in the "P-P" position, adjust the position of the light beam falling on the photocell cathodes by turning the mirror plug in the outside end of the SH-7004 Lens Mirror Assembly slightly one way or the other until minimum response is obtained. Lock the plug in this position with its fastening screws, and recheck the adjustment of the SH-7018 Collector Lens Assembly to see that there is no interference with the light path. Exact balance (maximum cancellation from standard frequency film) is then obtained by adjusting the potentiometer for lowest response. It should be possible to obtain 18 - 20 db. cancellation in this manner.

7.32 The second method consists simply of using a push-pull frequency film recording. The terminal strip switch is set to the "P - P" position, and adjustments are made in exactly the same manner as for the first method except that correct adjustments are indicated by maximum output meter readings. The peak will not be as well defined as the dip obtained in the first method, but alignment difficulties are reduced since all push-pull films from the same recorders and printers are likely to have about the same track dimensions and locations. A variation of this method is to set the switch to "STD" position and adjust for minimum output; it is doubtful, however, that this will result in very accurate push-pull balance, for circuit conditions and photocell characteristics are different in the two switch positions.

7.4 The high frequency response of the modified reproducers is several db less than that of standard ones due to the effects of shunt capacities in wiring, switches and photocell leads. Reproducer correction factors given in system installation notes for transmission tests will therefore be inadequate at 7 & 8 KC.

8. REPLACEMENT PARTS - (Refer to WE-7521, WE-7522, WE-7506, WE-7507, WE-7529, RSH-7003)

8.1 Reproducers manufactured prior to about the middle of 1942 had a small brass flywheel or balance wheel on the motor drive shaft. With the adoption of the present molded rubber couplings it is no longer necessary. Its place on the shaft is taken up by replacing the short SH-2518 shaft spacer with a longer one carrying the part number SH-2758.

ASSOCIATED DRAWINGS

WE-7507	Film Threading Diagram
WE-7521	Assembly
WE-7522	Parts List
WE-7553	Drive Side Assembly with Model K & Simplex Type Projector Mechanism
WE-7550	Drive Side Assembly with Model HK Projector Mechanism
RSH-7003	Impedance Roller Assembly
WE-7554	Push-Pull Modifications Schematic & Wiring Diagrams
WE-7529	PEC Bracket Assembly

Issued by
Engineering Department
Printed in U. S. A.

ASSOCIATED DRAWING WE-7521

Item	Part No.	Name
1	SH-2500	Main Frame Casting
2	SH-2501	Sound Sprocket Retaining Screw
3	SH-7027	Sound Sprocket & Pin Assembly
4	SH-2504	Sound Sprocket Shaft Spacer
5	SH-2507	Sound Sprocket Bearing Cover Plate
6	SH-2549	New Departure #87502-Z Ball Bearing
7	SH-2505	Sound Sprocket Equalizing Spacer
8	SH-7000	Sound Sprocket Gear Assembly
9	SH-2506	Sound Sprocket Collar
10	SH-2550	New Departure #487502-Z Ball Bearing
11	SH-2508	Ball Bearing Retaining Ring
12	SH-2677	Sprocket Shim Spacer
13	SH-2551	New Departure W-02 Lock Washer
14	SH-2552	New Departure N-02 Lock Nut
15	SH-2510	Sound Sprocket Shaft
16	SH-2667	#404 Woodruff Key
17	SH-2511	Chain Sprocket Shaft Bearing Cap
18	SH-2512	Chain Sprocket Shaft Spacer
19	**SH-7047	Chain Sprocket Drive Gear (Old style - SH-7001)
20	SH-2514	Chain Sprocket Drive Shaft Collar
21	SH-2531	Nameplate (Decalcomania located on glass in door)
22	SH-2515	Chain Sprocket Drive Shaft
23		
24	SH-2516	Drive Pinion
25	SH-2517	Framing Knob
26	SH-2523	Impedance Drum Retaining Clip
27	**SH-2765	Motor Drive Shaft Pinion (Old style - SH-2555)
28	SH-2758	Motor Drive Shaft Spacer
29	SH-2519	Motor Drive Shaft
30	SH-2520	Motor Drive Shaft Bearing Retaining Ring
31	#SH-7002	P.E.C. Bracket Assembly
32	SH-7003	Impedance Roller Assembly
33	***SH-7004	Lens Mirror Assembly
34	*SH-7005	Pad Roller Assembly (top)
35	*SH-7006	Pad Roller Assembly (bottom)
36	SH-7007	Sound Sprocket Gear Oiling Tube Assembly
37	SH-7012	Terminal Strip Assembly
38	SH-7009	Impedance Drum Assembly
39	SH-2524	Stabilizer Shaft Spacer
40	SH-2525	Stabilizer Shaft Collar
41	SH-2526	Reproducer Lens Tube
42		
43	SH-2527	Stabilizer Retaining Nut
44	SH-7010	Film Compartment Door Assembly
45	SH-7011	P.E.C. Compartment Door Assembly
46	SH-2632	Film Compartment Door Window
47	SH-2636	Door Knob
48	SH-2634	Door Hinge
49		
50	SH-2530	Vent Cap for Exciter Lamp Compartment
51	SH-2696	#2 Woodruff Key
52	SH-7008	Chain Sprocket Gear Oiling Tube Assembly
53	SH-2635	Door Flush Strike
54	SH-2668	Door Catch
55	SH-2533	P.E.C. Bracket Cork Washer
56	SH-2534	P.E.C. Bracket Steel Washer
57	SH-2535	Stripper Stud
58	SH-2536	Single Blade Stripper
59	SH-7013	Idler Roller Assembly
60	SH-2537	Idler Roller Shaft
61	SH-2538	Double Blade Stripper
62		6-32 x 3/16" R.H.I.M.S., N.P. (For door glass)
63		6-32 x 1/4" F.H.I.M.S., N.P. (Hinge screws)
64		
65		6-32 x 1/4" R.H.I.M.S., N.P. (Door catch screw)
66		6-32 x 3/8" F.H.I.M.S., N.P. (Used with 11, 17, 30, 5, 87, & 53)
67		
68		8-32 x 5/8" F.H.I.M.S., N.P. (Used with 34, 35, 61, 81, 82, & 33)
69	SH-2731	1/4"-20 L.H.Thd. x 5/16" F.H.I.M.S., N.P. (Used with 59 & 73)

Item	Part No.	Name
70	SH-2732	1/4"-32 L.H.Thd. x 3/4" F.H.I.M.S., N.P. (Used with 25)
71		3/8"-16 Std. Hex. Iron Nut (Used with 60)
72		#8 Std. St. Washer, N.P. (Used with 33)
73		1/4" Std. St. Washer, N.P. (Used with 59)
74	SH-2633	Film Compartment Door Window Retaining Clip
75		#1206 Shakeproof Lockwasher (Used with 11, 17, 30, 53, 54, & 87)
76		#1208 Shakeproof Lockwasher (Used with 47)
77		#1214 Shakeproof Lockwasher (Used with 25)
78		#1210 Shakeproof Lockwasher (Used with 37, 58, & 26)
79		10-32 x 3/8" R.H.I.M.S., N.P. (Used with 37, 58, & 26)
80		
81	SH-2540	Oil Tube Double Clamp
82	SH-2541	Oil Tube Single Clamp
83		#8 Std. St. Lockwasher (Used with 81, 82, & 68)
84	SH-2542	P.E.C. Adjusting Stud (Used with 31)
85		1/4"-20 Std. Hex. Iron Nut, N.P. (Used with 31)
86		1/4" Std. St. Lockwasher (Used with 31)
87	SH-2635	Door Flush Strike
88		10-24 x 15/16" O.H.I.M.S., N.P. (Used with 31)
89		10-24 x 1-5/16" O.H.I.M.S., N.P. (Used with 31)
90	SH-7016	Rotary Stabilizer Assembly
91	SH-2522	Motor Coupling
92	SH-7017	Oil Pan Assembly
93	PS-1460	3/8"-16 x 1-1/4" Hex. Hd. Screw N.P. (Sound Head Mtg. Screw)
94		3/8" Std. St. Washer, N.P.
95	PS-1461	5/16"-18 x 1-1/4" Hex. Hd. St. Cap Screw, N.P. (Sound Head Mtg. Screw)
96		5/16" Std. St. Washer, N.P. (Used with 99, 116, & 120)
97		5/16"-18 x 3/4" F.H.St. Screw (Used with 116, & 128)
98		#1218 Shakeproof Lockwasher (Used with 120)
99	SH-2693	Lower Mag. Mtg. Screw, 5/16" x 1" F.H.I.M.S., N.P. (Undercut)
100		7/16"-14 x 1" Hex. Hd. Motor Bracket Mtg. Screw, N.P.
101		7/16" Std. Motor Bracket Mtg. Washer, N.P.
102		
103		1/4"-20 x 3/4" Hex. Hd. Cap Screw N.P., slotted (Used with 129, & 174)
104		
105		
106		
107		
108	SH-2509	Takeup Belt Drive Pulley
109		
110		
111	SH-2532	Drive Chain Sprocket
112		1/4"-20 x 5/16" Allen Cup Point Set Screw
113	**** SH-2543	Drive Chain for Model K and Simplex Projectors (110 Pitch)
114	SH-2669	Simplex Takeup Drive Pulley
115	SH-2674	Takeup Belt, 5/16" Dia., 3' long
116	SH-2670	Adapter Plate
117	SH-2680	Simplex Mechanism Oil Shield
118	SH-7032	Rear Guard Assembly, Model K and Simplex Projectors
119	SH-2544	Motor Bracket
120	SH-2545	Motor Adjusting Screw
121	SH-2546	Motor Adjusting Screw Spacer
122	SH-2547	Motor Adjusting Screw Nut
123		
124		5/16"-18 Std. Hex. Iron Nut, N.P. (Used with 119, 120, & 126)
125		
126		5/16"-18 x 1 1/4" Hex. Hd.I.M. Screw, N.P. (Used with 119 & 134)
127	SH-2618	Motor (50 cycle, 110 volt)
128	SH-7014	Takeup Belt Idler Assembly
129	SH-7015	Drive Chain Idler Assembly (Model K and Simplex Projectors)
130	SH-2694	Helical Pinion Assembly (Replaces Item 27 for 50 cycle operation)
131	SH-2695	Gear (Replaces Item 19 for 50 cycle operation)
132	SH-2725	Photo-Electric-Cell
133	SH-2671	Exciter Lamp, 9 volt, 4 ampere, S.C.Bay.Pref. Base
134	SH-2673	Motor (60 cycle, 115 volt)
135	SH-2722	P.E.C. Bracket Countersunk Washer
136	SH-2675	Lens "B" Clamp Ring Extractor Tool (not shown on WE-7521)
137	SH-2755	Gasket for SH-2680
138		7/32" Dia. Steel Ball
139	SH-2605	Spring - for pad roller assembly
140	SH-2730	Pad Roller

Item	Part No.	Name
141	SH-2750	1/4-32 x 5/8" Tapered oval Filister Head Screw
142	SH-2589	Impedance roller tension spring
143		
144	SH-7030	Projector Mechanism Drive Assembly, Model K & Simplex Proj. a. Oil Cup, Simplex SH-2706 (Short) b. Oil Cup, Motiograph SH-2741 (Long) c. Locknut SH-2703 d. Drive Chain Sprocket SH-2678 e. Shaft SH-2688 f. Mech. Drive Pinion SH-2687
		Note: A few SH-7028 Mechanism Drive Sprocket Assemblies have been supplied to the field in place of the SH-7030 Assemblies for stock reasons. They are identical except that the shaft is Part No. SH-2681 and the drive pinion is Part No. SH-2684. They may be identified from the spiral oil grooves in the shafts; SH-7030 Assemblies have a single straight oil groove.
145		
146	SH-2727	Simplex Lower Magazine Friction Spring
147	SH-7038	HK Projector Drive, Gear and Sprocket Assembly
148	SH-7039	HK Projector Drive, Idler Gear Assembly
149	CS-1783-C	HK Mechanism Drive Shaft (CS-1701-C less CS-1102 Sprocket)
150	SH-2712	HK Projector Drive, Gear Bracket
151	SH-2713	HK Projector Drive, Gear & Sprocket Shaft
152	SH-2714	HK Projector Drive, Sprocket (used with 149)
153	SH-2698	HK Projector Drive, Chain (120 Pitch)
154		5/16-18 x 1" Hex. Hd. Cap Screw, N. P. (used with 150)
155		5/16-18 x 1/4" Allen Cup Point Set Screw (used with 152)
156	SH-2736	Motor Bracket Cover Plate
157		5/16 Std. Steel Washer, N.P. (used with 154)
158		1/4-20 x 1/4" Allen Cup Point Set Screw (used with 148)
159		1/4-20 x 3/8" Allen Cup Point Set Screw (used with 150)
160	TU-716 (TU-725 Avail. 1945)	SH-7500 Reproducer Takeup Assembly complete
161		3/8-16 x 3/4" Hex. Hd. Cap Screw, N.P. (used with 116)
162		5/16-18 x 1-1/2" Hex. Hd. Cap Screw, N.P. (used with 163)
163	CS-1445	Mechanism Adapter Plate, Motiograph K and HK
164		6/32 x 1/4" R.H.I.M.S., N.P. (for 156)
165	TU-476	Lock Nut
166	TU-480	Shaft
167	TU-477	Pulley and Hub
168	TU-718	Bushing Assembly
169	TU-467	Tension Adjusting Nut
170	TU-466	Tension Spring
171	TU-714	Gripping Ring and Disc Assembly
172	TU-468	End Thrust Ball Bearing
173	SH-7042	Rear Guard Assembly (HK only)
174	SH-7040	Drive Chain Idler Bracket Assembly (HK only)
175	PS-1461	5/16-18 x 1-1/4" Hex. Hd. Cap Screw, N.P. (used with 163)
176		#1-72 x 1/8" R.H. B.M.S. Nic. Pl.
177	SH-2602	Clip
178	SH-2596	Lens
179	SH-2598	Locknut Ring
180	SH-2597	Cork Gasket
181		1-72 x 1/8 Fil. H.B.M.S. N.P.
182	SH-2600	Clamp Plate
183	***SH-2599	Mirror (or ASP-8903)
184		#4 Brass Washer N.P.
185		4-36 x 1/4" Fil. H. B.M.S. N.P.
186	SH-2601	Mirror Holder
187	SH-2737	Spring
188	***SH-2603	Mirror (or ASP-8904)
Lens "B"	SH-7018	Collector Lens Assembly, consisting of: SH-2570 Lens Bracket SH-2571 Lens Retaining Ring SH-2572 Lens SH-2573 Lens Bracket Light Hood

Issued by
Engineering Department
Printed in U. S. A.

Notes: *SH-7005 and SH-7006 Pad Roller Assemblies consist of:
SH-2604 Arm Casting (for SH-7005 upper assembly)
SH-2613 Arm Casting (for SH-7006 lower assembly)
SH-7023 Pivot and Stud Assembly (for SH-7005 upper assembly)
SH-7025 Pivot and Stud Assembly (for SH-7006 lower assembly)
SH-2582 Adjusting Nut
SH-2605 Spring (detent)
SH-2730 Pad Roller
SH-2606 Pad Roller Shaft
7/32" Dia. Steel Ball Bearing (Detent Ball)
8-32 x 1/4" Allen Cup Point Set Screw (for SH-2606 Shafts)
8-32 x 5/8" Oval H.I.M.S. (Locking screw for SH-2582 Nut)

**Replace both drive gear and pinion as a "set" unless new type are in use. Part numbers are stamped on new type.

***Individual mirrors of the SH-7004 Lens Mirror Assembly may be replaced. Order as:
ASP-8903 Mirror (Exciter lamp end)
ASP-8904 Mirror (P.E.C. end)

(These are front surface mirrors and if used as a normal mirror, i.e., rear surface, efficiency is low. Check by viewing reflection of some object or light with mirror held at an angle. The correct reflecting surface is uppermost when ground glass edge cannot be seen).

**** A few reproducers, coded TA-7500, have been supplied to the field. These use ASP-8866 Chain.

#SH-7002 Photocell Bracket Assembly (Item 31) consisting of:
SH-2588 Exciter Lamp Socket
SH-2560 Exciter Lamp Socket Insulating Washer
SH-2562 Exciter Lamp Socket Insulating Bushing
SH-2723 Exciter Lamp Contact Stud
SH-2563 Exciter Lamp Connection Terminal
SH-2564 Photocell Socket
SH-2572 Lens (Lens B)
SH-2571 Lens Retaining Ring
SH-2573 Lens Bracket Light Hood

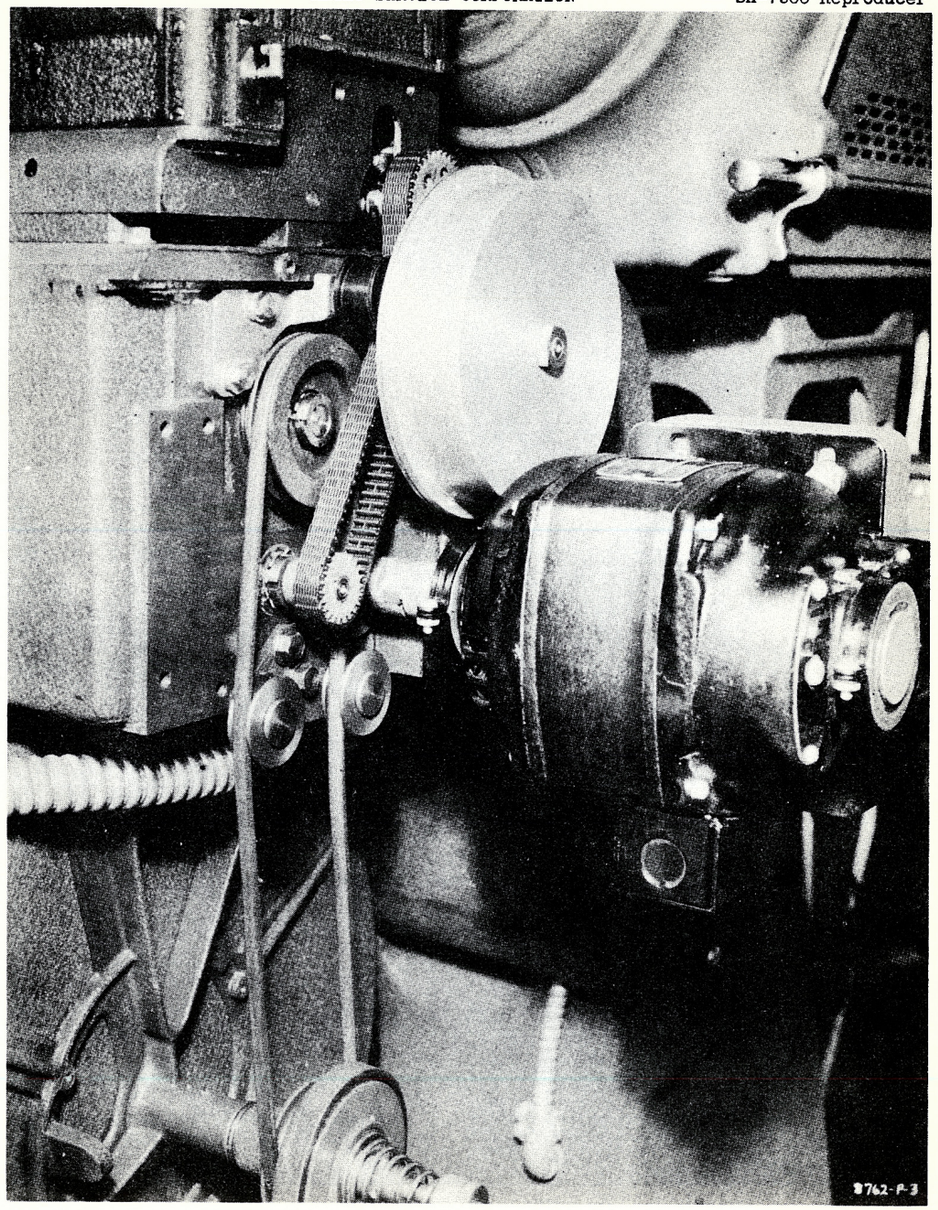

SH-7500 REPRODUCER

DRIVE SIDE ASSEMBLY WITH MODEL K AND SIMPLEX TYPE PROJ. MECH.

WE-7553 Printed in U.S.A. 9-10-41

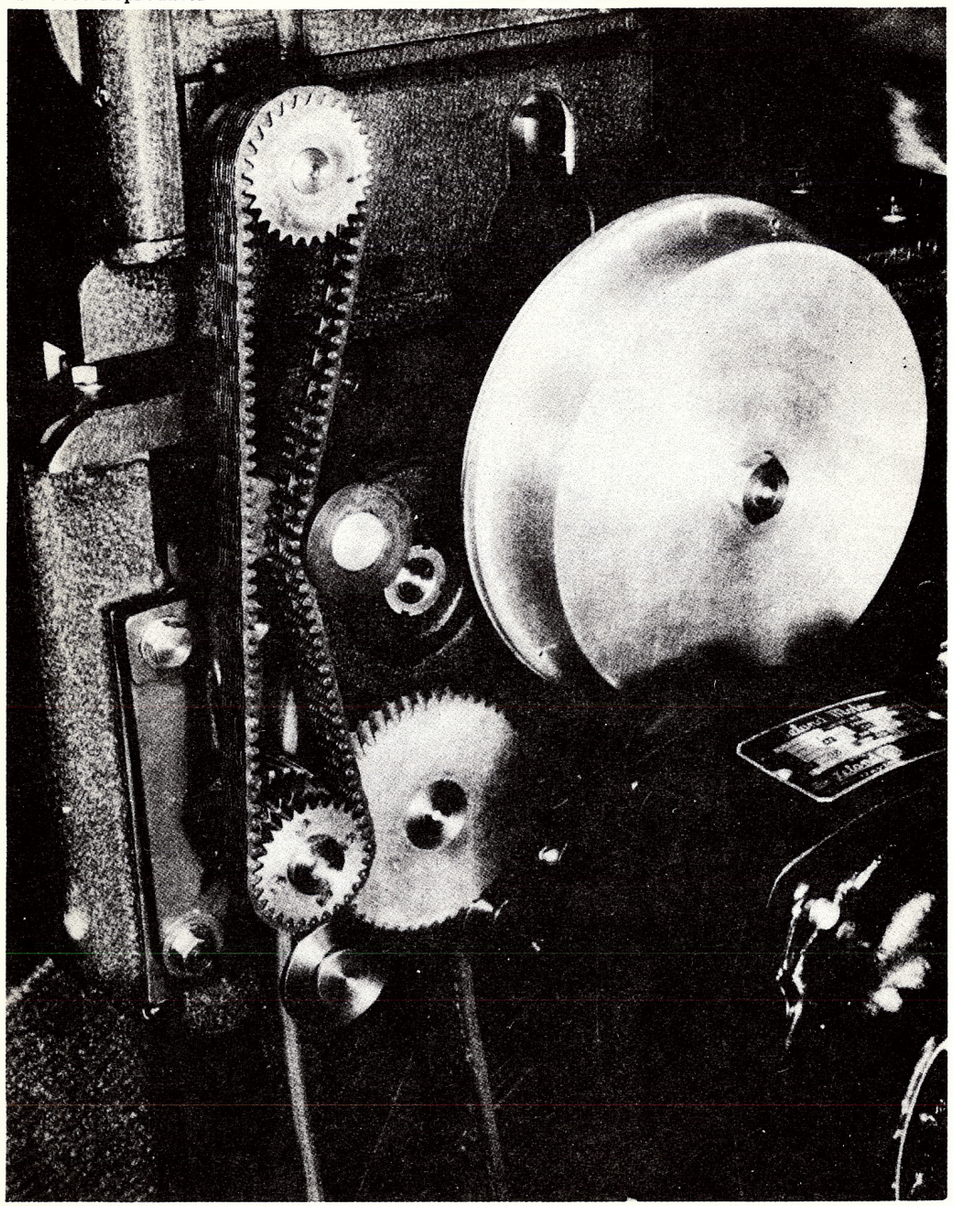

SH-7500 REPRODUCER

DRIVE SIDE ASSEMBLY WITH MODEL HK PROJ. MECH.

MOTIOGRAPH, INC.
CHICAGO, ILL. Printed in U.S.A. WE-7550-1
7-10-40

ALTEC SERVICE CORPORATION

SH-7500 Reproducer

WE-7521

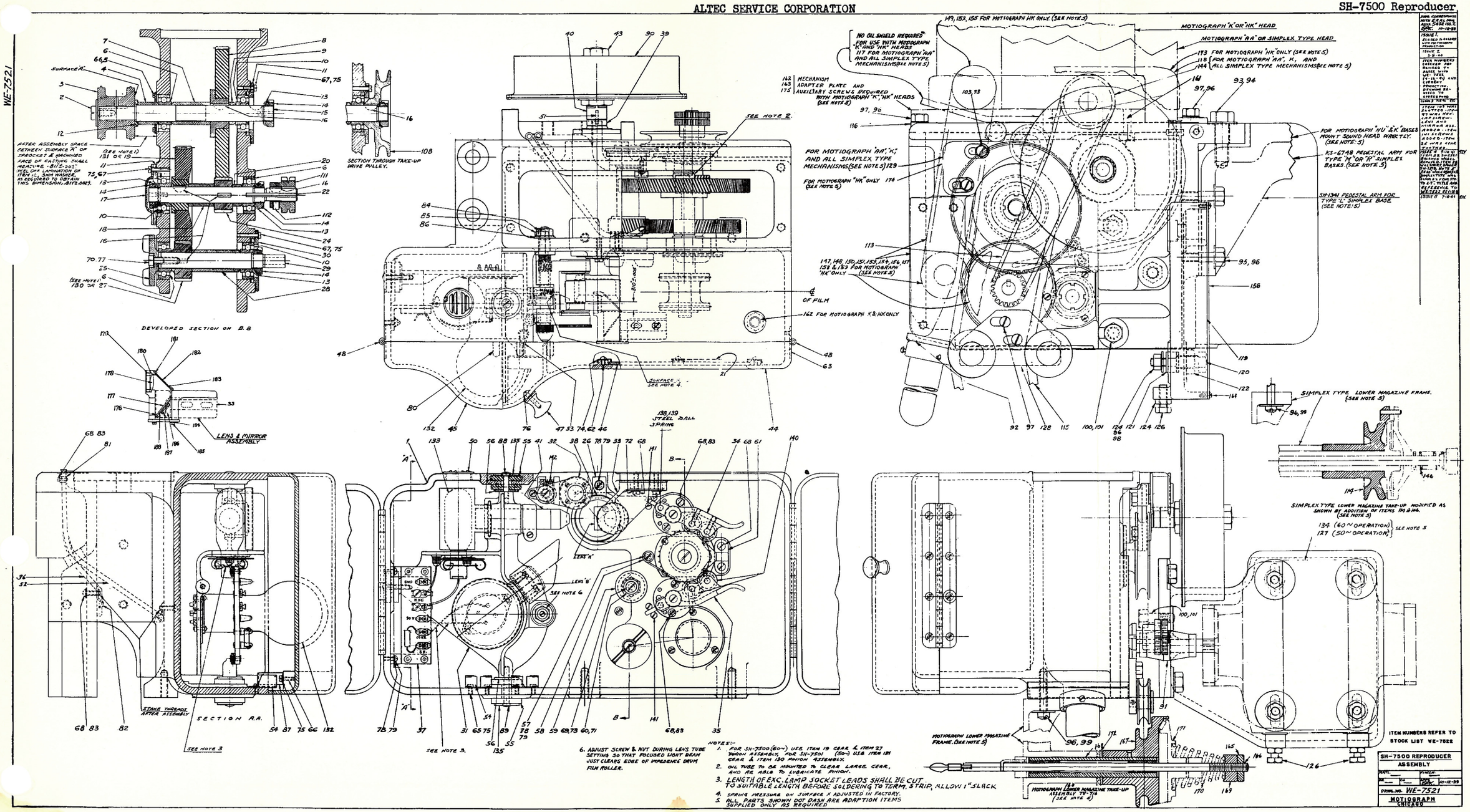

NOTES:-

1. FOR SH-7500 (60~) USE ITEM 19 GEAR & ITEM 22 PINION ASSEMBLY. FOR SH-7501 (50~) USE ITEM 18 GEAR & ITEM 130 PINION ASSEMBLY.
2. OIL TUBE TO BE MOUNTED TO CLEAR LARGE GEAR, AND BE HELD TO LUBRICATE PINION.
3. LENGTH OF EXC. LAMP SOCKET LEADS SHALL BE CUT TO SUITABLE LENGTH BEFORE SOLDERING TO TERM. STRIP, ALLOW 1" SLACK.
4. SPRING PRESSURE ON SURFACE X ADJUSTED IN FACTORY.
5. ALL PARTS SHOWN DOT DASH ARE ADAPTION ITEMS SUPPLIED ONLY AS REQUIRED.
6. ADJUST SCREW & NUT DURING LENS TUBE SETTING SO THAT FOCUSED LIGHT BEAM JUST CLEARS EDGE OF INTERLENS DRUM FILM ROLLER.

Printed in U.S.A.

ALTEC SERVICE CORPORATION

WE-7529

UNLESS OTHERWISE SPECIFIED
ALL DIMENSIONS ±.008"

CHANGES
ISSUE NO. 1 7-9-40

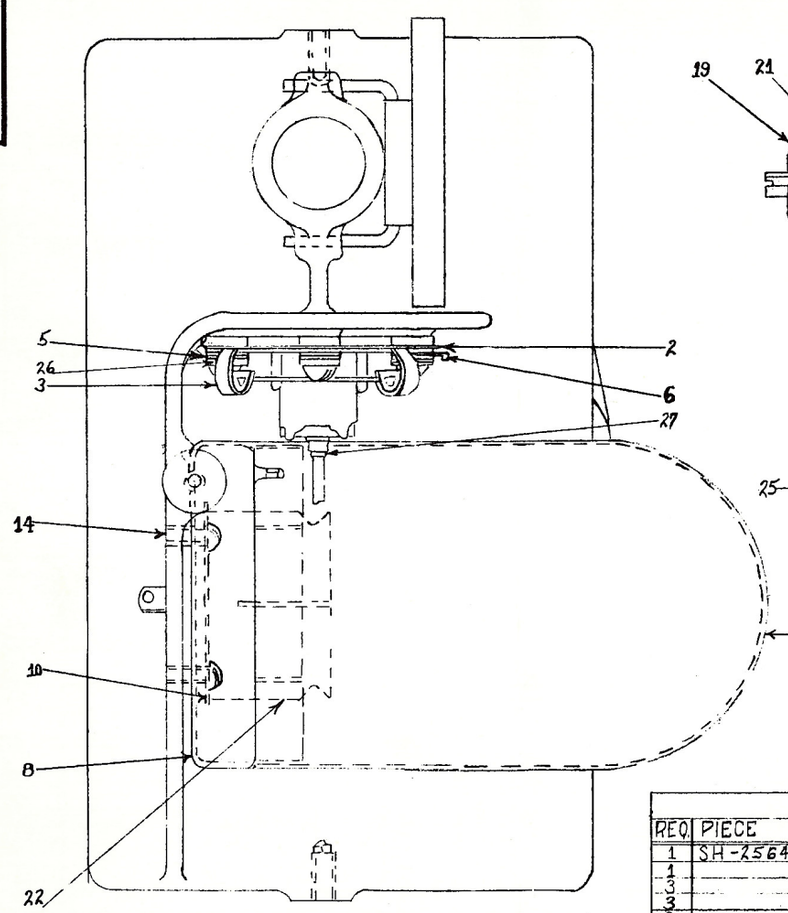

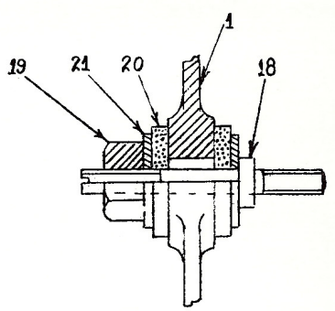

SECTION - AA

STOCK LIST			
REQ.	PIECE	ITEM	NAME
1	SH-2557	1	BRACKET
1	SH-2558	2	MOUNTING PLATE
1	SH-2559	3	LAMP SOCKET
6	SH-2560	4	INSULATING WASHER
3	SH-2561	5	WASHER
1	SH-2563	6	TERMINAL
1	SH-7020	7	LIGHT SHIELD ASSEMBLY
1	SH-7019	8	COVER BASE ASSEMBLY
1	SH-2565	9	P.E.C. COVER

STOCK LIST			
REQ.	PIECE	ITEM	NAME
1	SH-2564	10	EBY 33-27-AA VT SOCKET-PERKS-7741
1		11	#10-32 X 5/8" FIL.H.M.S. N.P.
3		12	#1206 SHKPRF. LKWSHR. C.P.
3		13	#6-32 X 3/8" RH.M.S. NP.
2		14	#10-32 X 3/8" R.H.M.S. N.P.
2		15	#8-32 X 5/8" FIL.H.M.S. N.P.
2		16	#8 STEEL WASHER N.P.
1	SH-7018	17	P.E.C. LENS ASSEMBLY
1	SH-2566	18	STUD
1		19	#10-32 HEX. NUT N.P.
2	SH-2568	20	WASHER (COPRENE)
2		21	3/4" OD 7/32 I.D. X 1/16" THK. ST. WASHER N.P.
1	SH-2569	22	P.E.C. CLIP
1		23	#6-32 X 1/4" R.H.M.S. N.P.
1		24	#2106 SHKPRF. LOCKING TERMINAL
2	SH-2539	25	#18 B&S GA. 2 CONDUCTOR STRANDED, PARALLEL MOLDED LATEX CORD 6'6
3	SH-2562	26	INSULATING BUSHING
1	SH-2723	27	EXCITER LAMP CONTACT STUD

DO NOT SCALE DRAWING

REDRAWN FROM ERPI. ASO-8832-5

TITLE SH-7500 REPRODUCER P.E.C. BRACKET ASSEMBLY (SH-7002)

MATERIAL | FINISH

DRAWN R.T. | CHKD. RTU | APPVD. RTU | DATE 7-9-40

DRWG. NO. WE-7529

MOTIOGRAPH INC.
CHICAGO, ILL.

WE - 7507

UNLESS OTHERWISE SPECIFIED
ALL DIMENSIONS ± .005"

CHANGES

ISSUE NO. 1 7-5-40
* NOTE ADDED HOUSING OUTLINE HAD OFFSET IN LOWER RIGHT CORNER. DID NOT HAVE OFFSET IN UPPER LEFT CORNER. CHANGED TO AGREE WITH PRODUCTION
ISSUE 2-9-40 RR

SLACK FILM 1 SPROCKET HOLE MINIMUM
1½ SPROCKET HOLES MAXIMUM

THREE FINGER LOOP

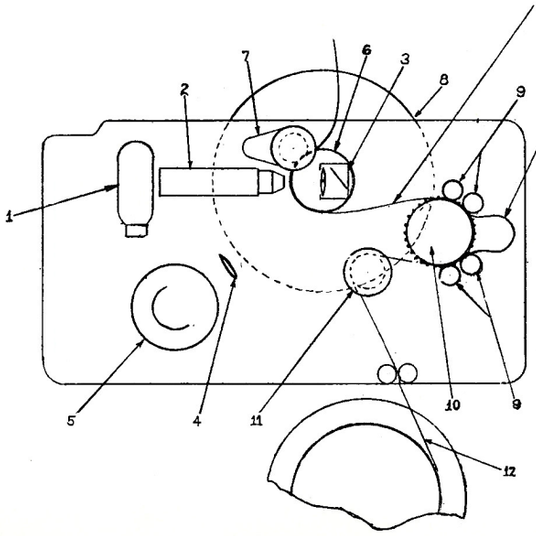

ITEM	APPARATUS	PART NO.	
1	TA-4204 EXCITER LAMP (PRE-FOCUS BASE)	SH-2671	
2	B&L-41-87-35 LENS ASSEM.	SH-2526	
3	LENS MIRROR ASSEM.	SH-7004	
4	PHOTO ELECTRIC CELL LENS ASSEM.	SH-7018	
5	6A PHOTO ELECTRIC CELL.	SH-2672	*
6	IMPEDANCE DRUM.	SH-7005	
7	IMPEDANCE ROLLER.	SH-7006	
8	STABILIZER.	SH-7016	
9	PAD ROLLERS.	SH-7024	
10	SOUND-HOLD-BACK SPROCKET.	SH-7027	
11	IDLER ROLLER.	SH-7013	
12	FILM.		

SH-2725 PHOTO CELL IS INTERCHANGEABLE WITH SH-2672 PHOTO CELL.

REVISED FROM ERPI ASO-13500-1

TITLE SH-7500 REPRODUCER SET
FILM THREADING DIAGRAM

MATERIAL		FINISH	
DRAWN AP	CHKD. RW	APPVD. RW	DATE 7-5-40

DRWG. NO. WE-7507

MOTIOGRAPH INC.
CHICAGO, ILL.

DO NOT SCALE DRAWING

ALTEC SERVICE CORPORATION

SH-7500 Reproducer

5351-37

Printed in U.S.A.

WE-7506

UNLESS OTHERWISE SPECIFIED
ALL DIMENSIONS ± .005"

CHANGES
ISSUE NO. 1 7-3-40
*NOTE ADDED
ISSUE 2 9-20-40

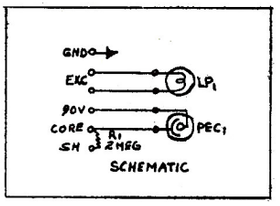

SCHEMATIC

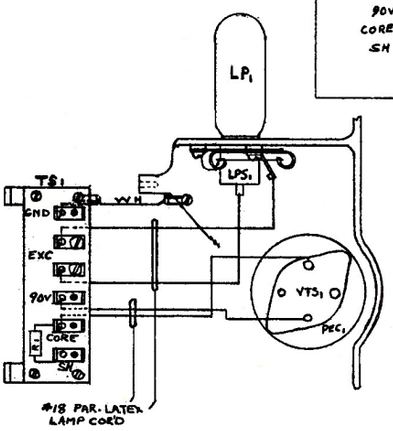

DESIG.	APPARATUS	PART NO.	
R1	IRC BT-½ ½ W. RESISTANCE 2 MEGOHM	SH-2642	
LPS1	EXC. LAMP SOCKET	SH-2539	
PEC1	W.E. 6-A PHOTO ELECTRIC CELL	SH-2672	*
TS1	TERMINAL STRIP ASSEMBLY	SH-7012	
VTS1	EBY #33-27-AA V. TUBE SOCKET	SH-2564	
LP1	TA-4204 EXCITER LAMP, 9 VOLT, 4 AMP., S.C., BAYONET PREFOCUS BASE	SH-2671	

* SH-2725 PHOTO CELL IS INTERCHANGEABLE WITH SH-2672 PHOTO CELL

DO NOT SCALE DRAWING

REVISED FROM ERPI ASL-8794-4

TITLE
SH-7500 REPRODUCER
SCHEMATIC AND WIRING DIAGRAM

MATERIAL	FINISH		
DRAWN YO	CHKD RW	APPVD RW	DATE 7-3-40

DRWG. NO. WE-7506

MOTIOGRAPH INC.
CHICAGO, ILL.

5351.38
SH-7500 Reproducer

ALTEC SERVICE CORPORATION

Printed in U.S.A.

STOCK LIST

ITEM	REQ.	PIECE	NAME
1	1	SH-2578	Impedance Roller Shaft
2	1	SH-2579	Impedance Roller Pivot Shaft
3	1	SH-2580	Impedance Roller Arm
4	1	SH-2581	Impedance Roller Spring Support
5	1	SH-2582	Pivot Shaft Nut
6	1	SH-2583	Impedance Roller
7	1	SH-2584	Impedance Roller-Shouldered
8	2	SH-2585	Impedance Roller Plate
9	2	SH-2586	Impedance Roller Spacer
10	2	SH-2587	Impedance Roller Shaft Key
11	1	SH-2588	Impedance Roller Plate
12	1	SH-2589	Impedance Roller Tension Spring
13	1	SH-2590	Impedance Roller Compression Spring
14	1	SH-2591	Impedance Roller Ring
15	1	SH-7021	Cushion Roller Assembly
16	2	SH-2592	#77034-New Depart.Bearg.Per No.Spec.Z5-1002
17	1		#8(.164")-32x5/8" OV.CSK.H.I.M.SCR.NIC.FIN.
18	4		#3(.099")-56x7/16" FLAT H.I.M. SCR.
19	8		#3(.099")-56x1/4" FLAT H.I.M. SCR. NIC.PL.
20	1		#6(.138")-32x7/16" OV.FIL. H.I.M. SCR.NIC.PL.
21	1		5/16" STD. Lockwasher
22	1		5/16" STD. Hex Nut
23	1	SH-2676	Impedance Roller Plate

1. Before assembling, all parts except bearings (Item 16) and cushion roller (Item 15) shall be cleaned in carbon tetrachloride to insure that all foreign particles such as dust, grit and chips have been removed. Before assembling the bearings the bearing seats in the arm and the seats on the shaft must be coated with a film of oil. The inner races of the bearings are marked at the high point of eccentricity and must be assembled in line with each other. Care shall be exercised to prevent cocking bearings in assembly, as subsequent forcing to straighten the bearings on either shaft or in the arm, may permanently damage them.

2. Rollers and their component parts shall spin freely on the ball bearings, and shall decelerate slowly, show no signs of stickiness due to the presence of dirt, or misalignment, or bind in the bearings.

3. Apply slushing grease to all exposed, unprotected surfaces of parts made from ferrous metal.

4. At no point shall the distance between flanges of roller be less than 1.376" nor greater than 1.378", including the side wobble of each roller, which shall not exceed .0005".

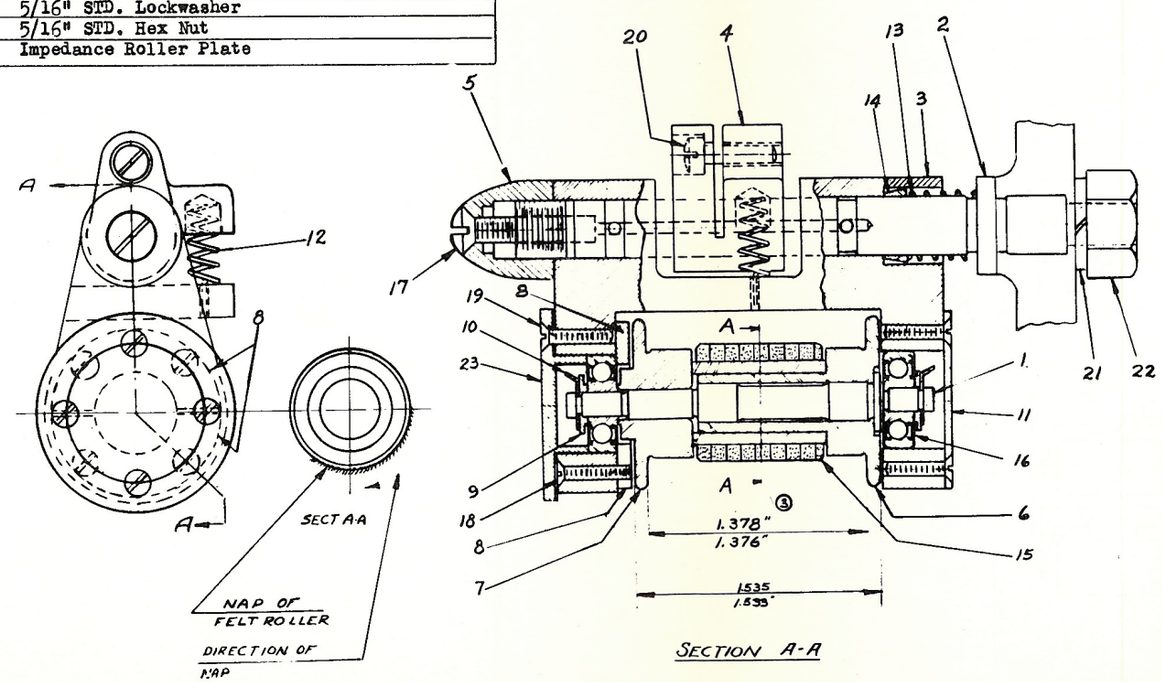

SECTION A-A

5. Items 1, 3, 6, 7, 8, 9, 10, 11, 15, 16, 18, 19, comprise the SH-7045 Assembly which should be replaced on a repair basis, unless there is a small V stamped on SH-2676 plate (Item 23), in which case component parts, except cushion rollers, are field replaceable.

CHANGES

ISSUE NO. 1

ISSUE NO. 3

DO NOT SCALE DRAWING.

TITLE SH-7500 REPRODUCER IMPEDANCE ROLLER ASSEMBLY

DRWG. NO. RSH-7003

MOTIOGRAPH INC. CHICAGO ILL.

WE-7554

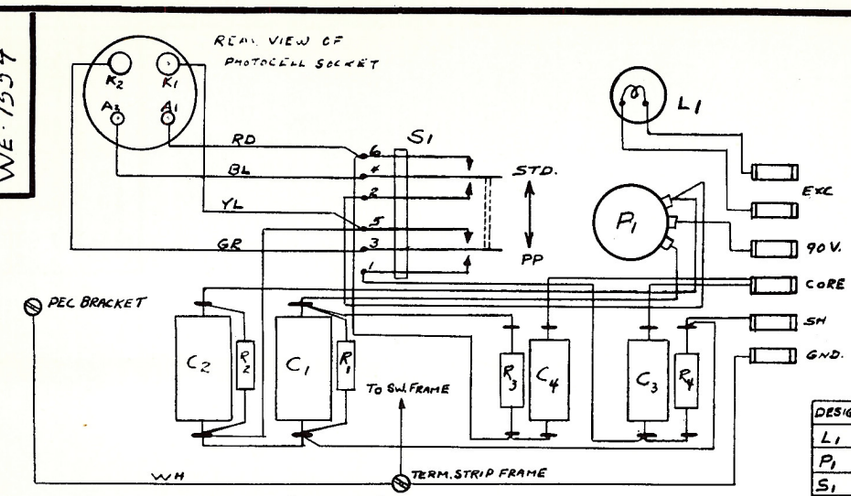

WIRING DIAGRAM

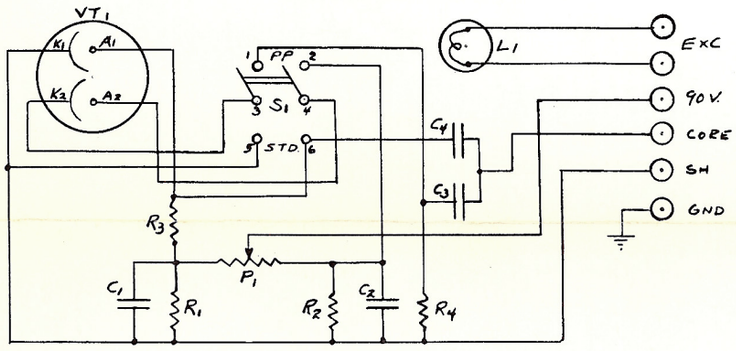

SCHEMATIC DIAGRAM

UNLESS OTHERWISE SPECIFIED
DECIMAL DIMENSIONS ± .005"
FRACTIONAL DIMENSIONS ± 1/64"
ANGULAR DIMENSIONS ± 1°

CHANGES
ISSUE NO. 16-10-43

DESIG.	APPARATUS
L_1	9V. 4A. S.C. BAY. PREF. BASE T-8 EXCITER LAMP
P_1	CENTRALAB #N-116 100,000 Ω POTENTIOMETER
S_1	UTAH #88 DPDT LONG JACK SWITCH
VT_1	RCA #920 or CETRON CE-21 TWIN PHOTOCELL
C_1C_2	0.1 MFD, 600V. PAPER TUBULAR CONDENSER
C_3C_4	0.005 MFD, 600 V. PAPER TUBULAR CONDENSER
R_1R_2	500,000 Ω, 1/2 WATT INSULATED RESISTOR
R_3R_4	2 MEG, 1/2 WATT " "

TITLE SH-7500 REPRODUCER
PUSH-PULL MODIFICATIONS
SCHEMATIC AND WIRING DIAGRAMS

MATERIAL ~ FINISH ~

DRAWN YO | CHKD. (illegible) | APPVD. RJ | DATE 6-10-43

DRWG. NO. WE-7554

MOTIOGRAPH INC.
CHICAGO, ILL.

DO NOT SCALE DRAWING

Printed in U.S.A.

1. DESCRIPTION:

The AAA Magnetic Reproducer is a film driven soundhead designed to mount between the projector mechanism and the upper magazine. It consists of an aluminum housing with a hinged door on the operating side and a rear cover that can be easily removed. The film motion filtering equipment, guide rollers, pad rollers, magnetic pickup heads, etc., are assembled on a heavy base plate before mounting in the aluminum housing. The head was especially designed for operation with the Motiograph AA or AAA projectors, or with any other standard American made projector by using proper adapters.

Due to the fact that the picture projector pulls the film down through the magnetic reproducer, the performance of the latter will depend to a certain extent upon the condition of the picture projector. There should be a minimum of wear or backlash in the projector gear train, especially as far as the motion of the upper feed sprocket of the projector is concerned. Any irregular motion or flutter in the movement of this sprocket will increase the amount of flutter elimination to be done by the filter system. The use of a stroboscope is recommended if any unusual flutter condition exists.

A minimum of Magnetic material has been used in the film transport mechanism. All rollers and impedance drums are made of aluminum and mounted on ball bearings. The 32 tooth sprocket is of the "built up" type and only the sprocket discs are of magnetic material. The tooth shape is of special design and of the "fat" tooth type which has proven best for this type sprocket.

The filter mechanism uses the tight loop system having two impedance drums and fly wheels. The filtering effect is provided by two damping rollers on the ends of long arms which pivot on shafts and housing assemblies and which are especially fitted and lubricated with a low viscosity oil. This condition is capable of reducing the flutter content to a very low level.

The pad roller assemblies are unusual in design and will latch in both open and closed positions. When adjusted at the factory, or when necessary to readjust in the field, spacing is adjusted with three thicknesses of film.

A pivoted idler roller is provided to reduce the danger of film breaking when starting the machine.

To provide synchronization between picture and sound the lower idler roller is adjustable, making it possible to obtain the necessary 28 frames separation.

The first AAA reproducers were coded 910-A and the housing did not provide sufficient clearance for some types of electric changeovers. The 910-B provided this clearance with no other changes. The 910-C has a modified filter system using longer damping roller arms. The 910-D is modified to provide a "pull away" plug for the magnetic head, and a changed position of the terminal strip to simplify wiring.

Issued by
Engineering Department
Printed in U. S. A.

September 17, 1954
Issue #1

The design provides for a film wrap of approximately 14 degrees around the pickup head for best contact and minimum wear. Sufficient tension is exerted by the damping rollers to straighten out warped or edge curled film before it reaches the scanning point.

The four track magnetic head has a nominal impedance of 30 ohms for each section, an inductance of 35 millihenries per section, and is assembled in a mu-metal shield to prevent noise pickup.

The top of the main housing, at the point where the magazine is attached, is made at an angle to tilt the magazine away from the front wall. This is a very important feature especially when large magazines are used or in cases where the projection angle exceeds 10 degrees.

The reproducer weighs approximately 22 pounds. The overall length is 11-1/4 inches and the depth is 8 inches. Its height is 7-1/2 inches at the front and it tapers off to 5-1/4 inches at the rear.

2. INSTALLATION:

Each reproducer is carefully inspected and tested before leaving the factory and, unless subjected to severe handling during shipment, should be in perfect operating condition when received.

Adjustment of rollers and magnetic head assemblies should not be changed unless it is obvious that they have been disturbed during shipment.

Packed with each reproducer are the following items which are required for installation or operation:

2 - R-20117 studs, with hex nuts for mounting reproducer to projector.
2 - R-11641 flywheels, identical but marked "upper" and "lower"
1 - A-404 wrench
1 - A-406 wrench
1 - A-407 wrench
Plus adapters, as indicated on order.

Remove the upper magazine and fire trap assembly from the projector and mount the reproducer using the R-20117 studs and nuts, being careful to line up the film slots and sprockets. Install the fire trap assembly and magazine. If necessary file the threading slot in the reproducer wider to properly align with the slot in the top of the projector mechanism.

Check rollers, drums, and sprocket to see that they revolve freely. Check the filter arms to see that they move freely within their range.

Install the flywheels on their shafts making sure that the woodruff keys remain properly seated. The upper flywheel should be installed first with its hub on the outside. The lower flywheel is then installed with its hub on the inside. A hole is provided in the front of the housing to insert the hex head wrench. These set screws must be tight, otherwise the flutter will be increased beyond the normal limits. There should be just a trace of endplay in the impedance drum assembly after tightening flywheel.

The tension on the upper magazine spindle should be adjusted to provide a smooth rotation of the reel. Any uneven movements at this point could increase the flutter content of the reproducer. The exact tension is not too important but the reel movement should be steady.

At this point the projector and optical soundhead should be inspected to make sure that CinemaScope apertures, sprockets and rollers (where required) have been installed. The entire film path should be checked to detect any parts that may cause excessive wear on the magnetic sound tracks or the enlarged picture area of the CinemaScope frame.

A small compass can be used to detect the magnetization of any projector or soundhead parts that could cause trouble in the sound or damage the recording on the magnetic tracks.

The magnetic head is a four track assembly designed to scan one 29 mil and three 63 mil tracks. These tracks are numbered from the outside as follows: 1, 2, 4 and 3. Number 4 is the 29 mil or sound effects track and when used delivers its sound to the auditorium speakers.

3. THREADING and OPERATION:

The threading chart on Drawing ASK-931 shows the film path through the reproducer and the bypass threading when using standard film. Until one is thoroughly familiar with the threading operation it may be more satisfactory to first thread the film loosely over the sprockets and rollers of the reproducer, then properly on through the projector, optical soundhead and into the lower magazine. The reproducer can now be properly threaded by working back from the top projector sprocket to the upper magazine. Place the film over the teeth on the bottom of the large sprocket and lock the roller assembly. With one hand hold the top damping roller in its normal position (against its stop to the right) and push the lower damping roller to the left against its stop. With the other hand pull the film tight over the top of the sprocket being sure that the teeth fit the holes properly, and latch the upper pad roller assembly. With the machine in operation, the filter mechanism should stabalize in approximately five seconds. It is very important during operation that the centers of the two damping rollers be aligned vertically and that they can move freely in either direction. If the rollers do not line up properly in the vertical plane, the flywheels should be removed and the tension of the compensating spring should be adjusted by moving the brass spring holders, until this condition is reached. It is not necessary to replace the flywheels until the proper adjustment of the compensating springs is obtained.

Issued by
Engineering Department
Printed in U. S. A.
September 17, 1954
Issue #1

4. ADJUSTMENT and MAINTENANCE

As received, the reproducer is ready for operation after installation of the flywheels. No lubrication is required as all rollers are mounted on specially selected sealed ball bearings. The top damper roller has flanges and is the indexing or position control with respect to film alignment over the magnetic head. When assembled on its shaft it is very important that a minimum or endplay exists, otherwise it cannot exert the proper control over the lateral movement of the film. During assembly it is sometimes necessary to use small spacing washers on the sprocket shaft to position the sprocket so that its teeth will fall exactly in the center of the sprocket holes.

The operation of the flutter filter unit depends upon the proper assembly and adjustment of the damping arm assemblies, especially the shaft and housing assemblies which allow the arms to pivot. During assembly these parts are honed together to insure proper surfaces and lubricated in such a manner as to exclude air from the assembly and keep the shaft reservoir permanently full of oil. No further attention should be required for at least a year, when the assembly should be cleaned, inspected and lubricated by the sound engineer. A specially selected oil, identified by Motiograph as Part No. LP-726, is required for this application. It will be supplied on order in 2 oz. bottles.

5. MAGNETIC HEAD ADJUSTMENT

To provide proper output level, frequency response, balance between tracks and good contact between the head gaps and each magnetic track, it is very important that the position of the magnetic heads be adjusted to meet these requirements. Three separate adjustments are provided to obtain track placement, canter, and azimuth, and they are usually adjusted in that order.

After loosening the track placement locking screw, the head can be aligned visually by moving it to a point where it covers the center portion of the film. With an 8000 cycle azimuth test film loop and an output meter connected across the output of the #2 channel, loosen the canter locking screw and rotate the head mount on its axis until the highest meter reading is obtained. Tighten lock screws. Now slightly loosen azimuth locking screws and rotate the head mount back and forth for maximum meter reading.

To complete overall adjustment realign track placement and adjust for maximum meter deflection. When making the second adjustment of the Canter it will be noticed that the same high meter reading will be obtained for several degrees of rotation, and the final setting should be in the center of this rotation. Now complete the adjustment with a realignment of the azimuth.

If it is found that channels 1, 2 and 3 are not of equal levels at 8000 cycles, the canter adjustment should be repeated in an effort to balance the channel to within $\pm$ 1.5 db of each other. Any remaining differences can be compensated for in the

preamplifiers. After the last canter adjustment it will be necessary to again realign the azimuth. It is important to have sufficient high frequency response from #4 channel to insure proper operation of the squelch amplifier circuit, when this equipment is used in connection with auditorium speakers.

It is possible that the magnetic head will sometimes become magnetized, possibly through inadvertent contact with magnetic tools or because some of the projector or magazine parts are highly magnetized. Normally a magnetized head will cause an increase of background noise, and in combination with certain conditions of the sound track may produce a background noise sounding like a swarm of "bees".

The projectionist should never "bloop" a magnetic head with a piece of metal that may be magnetized as this may transfer enough of the magnetic energy to the head to cause considerable trouble.

The following adapters are available for use with the AAA reproducer:

For Motiograph AA or AAA Mechanism, order the 11700 Assembly

For Motiograph H, HU, HK or K Mechanisms, order the 11701 assembly plus R-11854 Magazine Adapter.

For Simplex, Century and Brenkert mechanisms, order the 11702 assembly.

Simplex XL magazines are not adaptable to the Motiograph Penthouse Reproducer.

ASSOCIATED DRAWINGS and PHOTOGRAPHS

ASK-931 - Threading Diagram
ASK-932 - Wiring Diagram
ASK-933 - Assembly and Parts List
ASK-934 - Front View, Penthouse Reproducer
ASK-935 - Rear View, Penthouse Reproducer

Issued by
Engineering Department
Printed in U. S. A.
September 17, 1954
Issue #1

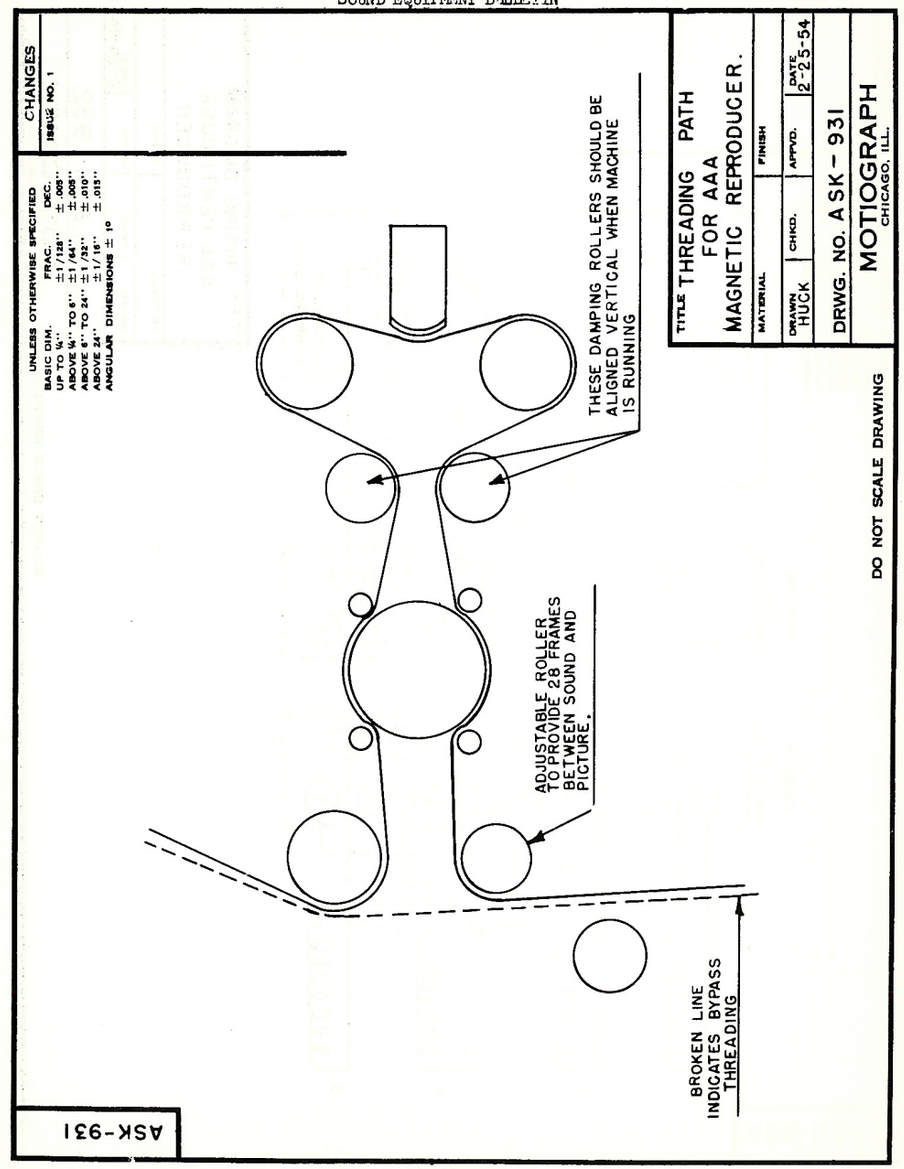

Issued by
Engineering Department
Printed in U. S. A.

September 17, 1954
Issue #1

ASK-932

September 17, 1954
Issue #1

Issued by
Engineering Department
Printed in U.S.A.

UNLESS OTHERWISE SPECIFIED

BASIC DIM.	FRAC.	DEC.
UP TO ¼"	±1/128"	±.005"
ABOVE ¼" TO 6"	±1/64"	±.005"
ABOVE 6" TO 24"	±1/32"	±.010"
ABOVE 24"	±1/16"	±.015"

ANGULAR DIMENSIONS ± 1°

CHANGES
ISSUE NO. 1

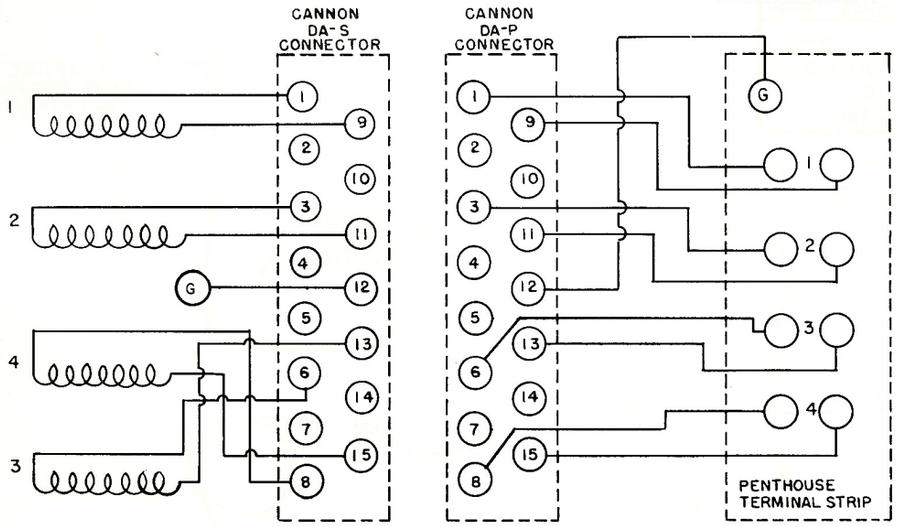

TITLE WIRING DIAGRAM
AAA PENTHOUSE
REPRODUCER

MATERIAL		FINISH	
DRAWN HUCK	CHKD.	APPVD.	DATE 2-26-54

DRWG. NO. ASK-932

MOTIOGRAPH
CHICAGO, ILL.

DO NOT SCALE DRAWING

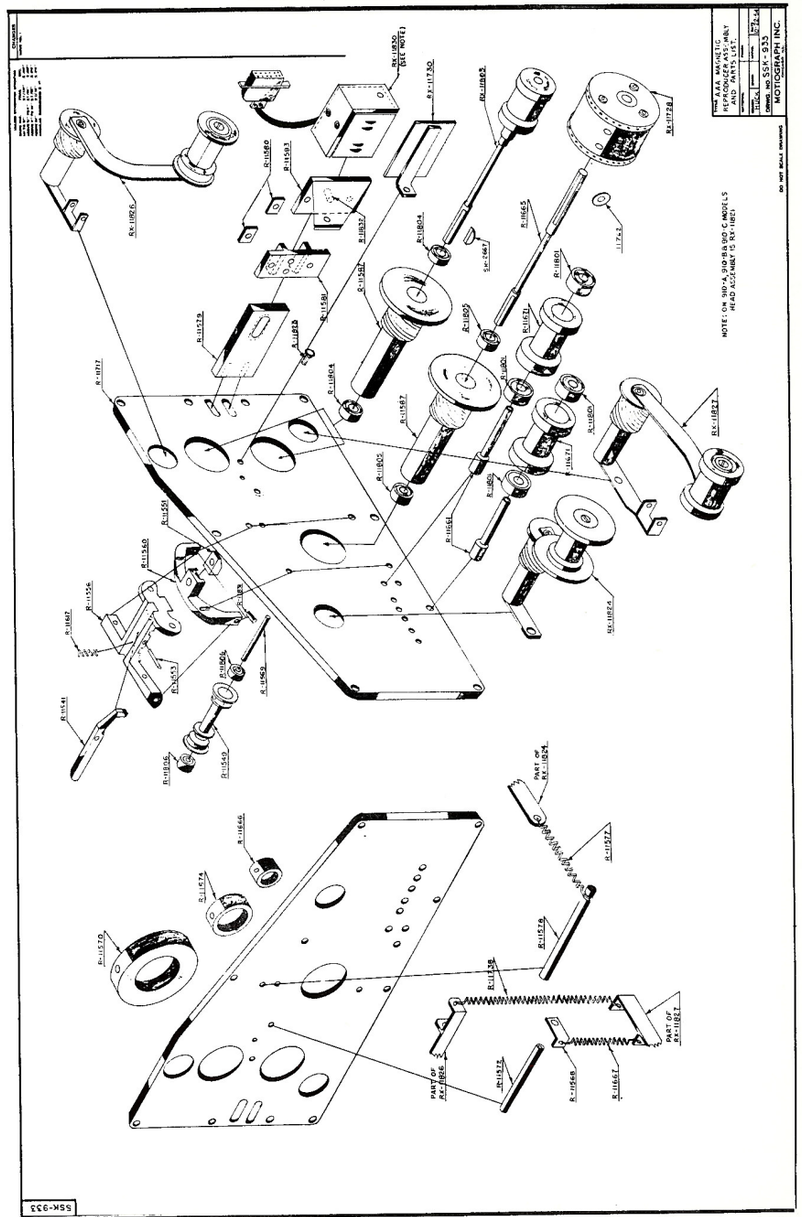

Issued by
Engineering Department
Printed in U. S. A.

November 30, 1954
Issue #2



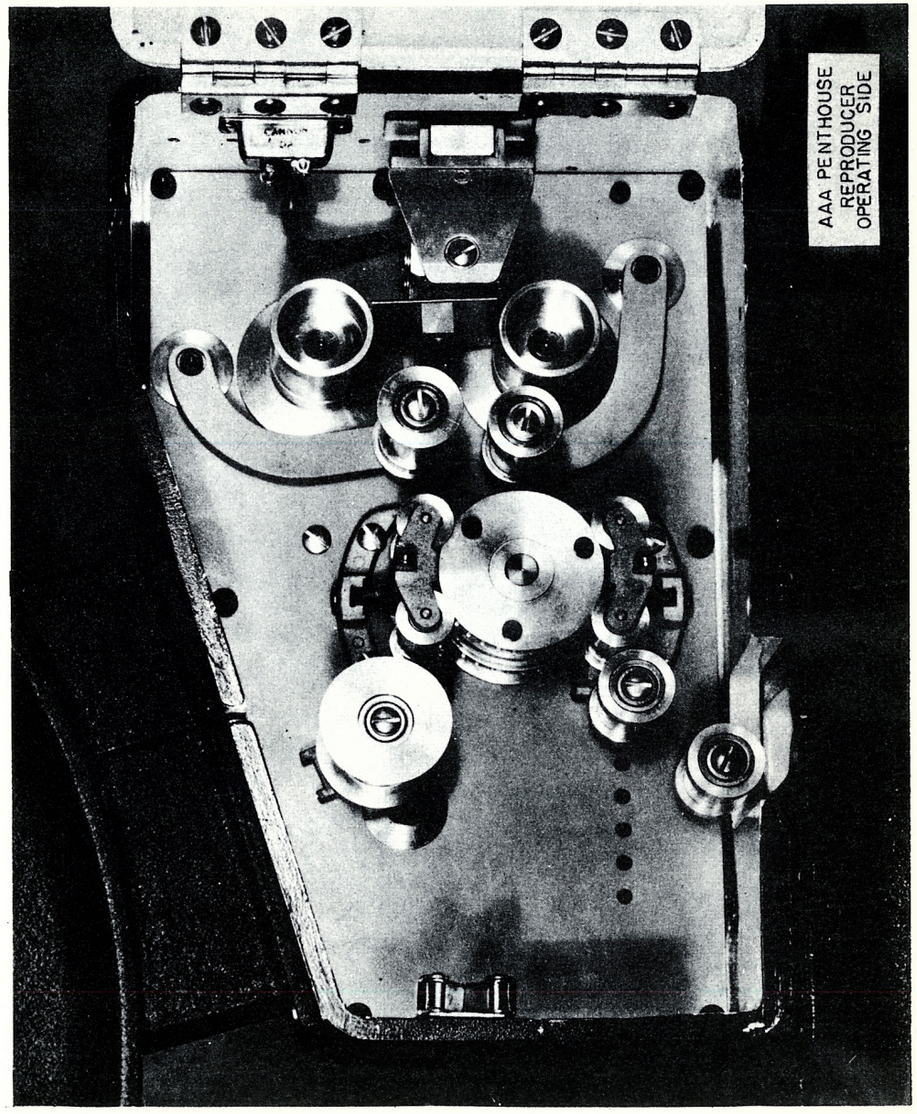

Issued by
Engineering Department
Printed in U. S. A.

September 17, 1954
Issue #1

5351.52

AAA MAGNETIC REPRODUCER

ALTEC SERVICE CORPORATION
MOTIOGRAPH
SOUND EQUIPMENT BULLETIN

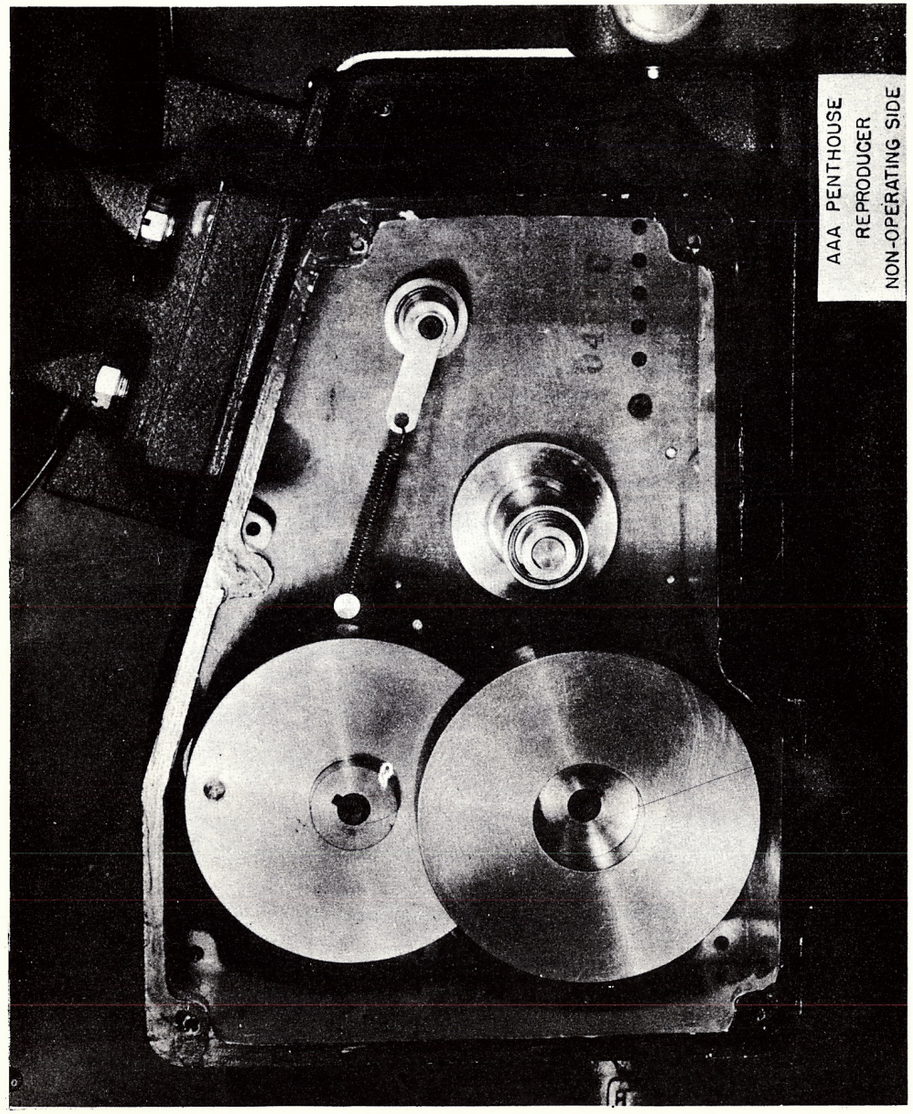

September 17, 1954
Issue #1

Issued by
Engineering Department
Printed in U. S. A.

1. PURPOSE

1.1 To announce the availability of the AQ-3008 Filter Arm Stop. Installation of this attachment will reduce the stabilization time of the AAA Magnetic (or 910-C and 910-D) Reproducers by from 3 to 4 seconds. In general, this reduction is ample to prevent wows in music right after a changeover.

2. DESCRIPTION

2.1 The AQ-3008 Stop consists of a small bar which fastens by existing holes at the lower front corner of the penthouse front panel. An adjustable slider on the rear end of the bar limits the first starting excursion of the lower filter arm.

3. INSTALLATION PROCEDURE

(a) Remove the two screws in the lower front corner holding the front panel to the housing.

(b) Attach the AQ-3008 Stop, slider to rear, being sure washers supplied set the bar out from the panel to clear the flange on the filter arm pivot.

(c) Push slider all the way to the rear, thread the machine leaving slack equal to <u>three</u> perforations from a tight loop.

(d) Start machine, and after stabilization move the slider forward and clamp it in a position leaving 3/32" clearance to the bottom of the lower filter arm. (3/32" is about equal to the thickness of two dimes).

Issued by
Engineering Department
Printed in U.S.A.
December 13, 1954
Issue #1

(e) Stop machine, unthread and rethread leaving slack equal to <u>two</u> perforations from a tight loop.

(f) Start machine and check to see that clearance remains at value set.

(g) Instruct projectionist to always thread up the projector the same way: Leave the top pad roller in the penthouse until last, pull film tight and then back off two sprocket-holes.

(h) Projectionists should occasionally check to see that while the machine is running the clearance between arm and stop is enough to prevent contact except during the starting period.

4. MERCHANDISING

4.1 For each machine, order

1 - AQ-3008 Filter Arm Stop
(Charge Classification "NET")

This attachment is available at a price of $15.00 per machine if installed at the time of a routine call. When special trips are necessary, such calls are billable, per schedule 9A or 9B of F. I. #5, whichever applies.

SYSTEM	SOUND REPRODUCER	PRE-AMPLIFIER	MAIN AMPLIFIER	CONTROL CABINET	SWITCHING PANEL	POWER UNIT	NETWORK	H.F. LOUDSPEAKER	H.F. HORN	L.F. LOUDSPEAKER	BAFFLE	LOUDSPEAKER SYSTEM	MONITOR	SYSTEM DRAWINGS
M-7	MK (2)	PA-7505 *APA-2566 *APA-2567	MA-7505 *AMA-2513 *LMA-2514	MA-7015 or PA-7015 *LPA-7025		PU-7502 *APU-2615 *APU-2614	SE-7038 *ASE-7038	SE-7015	SE-7029	SE-7034	SE-7037	SE-7508	SE-7501 (TA-7472)	LSS-7518 LSS-7517
M-9 M-9A	SH-7500 (2)	PA-7505 *APA-2566 *APA-2567	MA-7505 *AMA-2513 *LMA-2514	MA-7015 or PA-7015 *LPA-7025		PU-7502 *APU-2615 *APU-2614	SE-7038 *ASE-7038	SE-7015	SE-7029	SE-7034	SE-7037	SE-7508	SE-7501 (TA-7472)	LSS-7518 LSS-7517 LSS-7519 LSS-7515
M-9 Dual	SH-7500 (2)	PA-7505 *APA-2566 *APA-2567	MA-7505 (2) *AMA-2513 *LMA-2514	PA-7015 *LPA-7025	SE-7512 (TA-7478) *WE-7500	PU-7502 *APU-2615 *APU-2614	SE-7038 *ASE-7038	SE-7015	SE-7029	SE-7034	SE-7037	SE-7508	SE-7501 (TA-7472)	LSS-7525
M-10	SH-7500 (2)	TA-7466A *WE-7539 *WE-7540	TA-7467A *WE-7537 *WE-7538	PA-7015 *LPA-7025		PU-7502 *APU-2615 *APU-2614	SE-7038 *ASE-7038	SE-7015	SE-7029	SE-7034	SE-7037	SE-7508	SE-7501 (TA-7472)	LSS-7523 LSS-7521
M-10 Dual	SH-7500 (2)	TA-7466A *WE-7539 *WE-7540	TA-7467A (2) *WE-7537 *WE-7538	PA-7015 *LPA-7025	SE-7512 (TA-7478) *WE-7500	PU-7502 *APU-2615 *APU-2614	SE-7038 *ASE-7038	SE-7015	SE-7029	SE-7034	SE-7037	SE-7508	SE-7501 (TA-7472)	LSS-7522
M-11	SH-7500 (2)	TA-7466A *WE-7539 *WE-7540	TA-7467A *WE-7537 *WE-7538	PA-7500 (TA-7468) *WE-7505 *WE-7517		TA-7471 *WE-7502 *WE-7501	SE-7018 *SE-7018	SE-7015	SE-7016	SE-7020(2)	SE-7019	Similar SE-7511	SE-7501 (TA-7472)	LSS-7512 LSS-7513
M-11 Dual	SH-7500 (2)	TA-7466A *WE-7539 *WE-7540	TA-7467A (2) *WE-7537 *WE-7538	PA-7500 (TA-7468) *WE-7505 *WE-7517	SE-7512 (TA-7478) *WE-7500	TA-7471 *WE-7502 *WE-7501	SE-7018 *SE-7018	SE-7015(2)	SE-7016	SE-7020(2)	SE-7019	Similar SE-7522	SE-7501 (TA-7472)	LSS-7514
M-13	SH-7500 (2)	TA-7466A *WE-7539 *WE-7540	TA-7467A (2) *WE-7537 *WE-7538	PA-7500 (TA-7468) *WE-7505 *WE-7517	SE-7512 (TA-7478) *WE-7500	TA-7471 *WE-7502 *WE-7501	TA-7473 *WE-7503	594A	24A	TA-4181A (2)	TA-7396	Not coded as such	SE-7501 (TA-7472)	WE-7514 WE-7514
M-13A	SH-7500 (2)	TA-7466A *WE-7539 *WE-7540	TA-7467A (2) *WE-7537 *WE-7538	PA-7500 (TA-7468) *WE-7505 *WE-7517	SE-7512 (TA-7478) *WE-7500	TA-7471 *WE-7502 *WE-7501	SE-7018 *SE-7018	SE-7015(2)	SE-7016	SE-7049(2)	TA-7396	Not coded as such	SE-7501 (TA-7472)	WE-7514 WE-7513
M-14A	SH-7500 (2)	TA-7466A *WE-7539 *WE-7540	87E *AASO-8518 *AASR-4549 TA-7467A (2) *WE-7537 *WE-7538	PA-7500 (TA-7468) *WE-7505 *WE-7517	SE-7512 (2) (TA-7478) *WE-7500	TA-7478 *WE-7502 *WE-7501 TA-4144A *ASL-2981 *ASO-6876	SE-7018 *SE-7018	SE-7015(2)	SE-7043	SE-7034(4)	TA-7397	Not coded as such	SE-7501 (TA-7472)	WE-7516 WE-7515 WE-7508
M-15A	SH-7500 (2)	TA-7466A *WE-7539 *WE-7540	87E (2) *AASO-8518 *AASR-4549 TA-7467A (2) *WE-7537 *WE-7538	PA-7500 (TA-7468) *WE-7505 *WE-7517	SE-7512 (3) (TA-7478) *WE-7500	TA-7478 *WE-7502 *WE-7501 TA-4144A *ASL-2981 *ASO-6876	SE-7018 *SE-7018	SE-7015(4)	SE-7016(2)	SE-7034(4)	TA-7397	Not coded as such	SE-7501 (TA-7472)	WE-7516 WE-7515 WE-7508
M-17	SH-7500 (2)	TA-7466A *WE-7539 *WE-7540	118A *ESR-614686 *ESR-613790 TA-7467A (2) *WE-7537 *WE-7538	PA-7015 *LPA-7025	SE-7512A SE-7512 (TA-7478) *WE-7500	SE-7520(2) *RSE-2622	SE-7018 *SE-7018	SE-7015(2)	SE-7016	SE-7020(4)	SE-7019(2)	Similar SE-7522	SE-7501 (TA-7472)	LSS-7526
M-9B	SH-7500 (2)	PA-7505A *APA-2637 *APA-2638	MA-7505A *LMA-2650 *LMA-2649	PA-7015 *LPA-7025		SE-7520 *RSE-2622	SE-7038 *ASE-7038	SE-7015	SE-7029	SE-7034	SE-7037	SE-7508	SE-7501 (TA-7472)	LSS-7527 LSS-7528
M-911	SH-7500 (2)	PA-7505A *APA-2637 *APA-2638	MA-7505A *LMA-2650 *LMA-2649	PA-7015 *LPA-7025		SE-7520 *RSE-2622	SE-7018 *SE-7018	SE-7015	SE-7016	SE-7020(2)	SE-7019A	SE-7511	SE-7501 (TA-7472)	XSS-7535
M-911 Dual	SH-7500 (2)	PA-7505A *APA-2637 *APA-2638	MA-7505A (2) *LMA-2650 *LMA-2649	PA-7015 *LPA-7025	SE-7512 (TA-7478) *WE-7500	SE-7520 *RSE-2622	SE-7018 *SE-7018	SE-7015(2)	SE-7016	SE-7020(2)	SE-7019A	SE-7522	SE-7501 (TA-7472)	LSS-7531 LSS-7532

* Associated drawings

Issued by
Engineering Department
Printed in U.S.A.

1. DESCRIPTION

1.1 New sound systems shipped after 9-1-48 will include the required amount of RG-62-U Coaxial Cable instead of Belden #8401 as previously shipped. The RG-62-U cable is identified by its solid #22 copper core conductor polythylene dielectric material, copper shielding and black vinyl outer jacket.

1.2 This cable has a rated capacity of 14 micro-micro-farads per foot. Cable ends are dressed in much the same manner outlined in system instruction bulletins for #8401 cable. In making soldered joints care must be exercised to avoid melting the polythylene dielectric material; use a hot, well-tinned iron and remove it from the joint as soon as the solder flows. Failure to exercise care in this detail may result in melting the polythylene under the braiding which may lead eventually to a short between the solid conductor and the braided shield.

2. CORRECTION FACTORS

2.1 The following table gives cable correction factors for use in transmission tests on Motiograph sound systems installed with RG-62-U input cables 12 ft. long and inter-amplifier cables 20 ft. long. The factors are to be added algebraically to those now given in the bulletins or derived from equalization curves. As contrasted with #8401 cable, RG-62-U inter-amplifier cables up to 40 ft. long have negligible effect upon the system frequency response, and no correction factors for varying cable lengths need be applied. The apparent small loss at 55 cycles comes from the fact that the increased HF response due to the lower capacity cable extends down slightly beyond the 1000 cps reference frequency.

Frequency cps	55	130	300	1000	3000	5000	7000	8000
Corr. Factor db	0.5	0	0	0	-1.5	-3.0	-3.5	-3.0

Issued by
Engineering Department
Printed in U.S.A.

1. M-7 SYSTEMS (For components refer to Chart Pg. 5380.01)

1.1 This system is identical to Model M-9 Type Systems except that the MK Fixed Gate Reproducers are supplied instead of Model SH-7500 Mirrophonic Deluxe Reproducers. Electrical connections to MK Reproducers are the same as to SH-7500 Reproducers, and the same exciter lamp and optical system are used in both reproducers; the photocell used in the MK Reproducer has approximately the same sensitivity, so all gain and frequency response information given in the M-9 System installation notes applies also for the M-7 Type Systems.

2. M-9 SYSTEMS (For components refer to Chart Pg. 5380.01)

2.1 Amplifier Cabinet - Locate on the projection room front wall between the projectors so that extension control rods will clear port holes and other obstructions. Have the cabinet as close as possible to the left projector so that control knobs may be easily reached from its operating position. Cast stop lugs are provided for both control shafts; these go on the rods inside the cabinet with the 5/16" flat washers between lugs and cabinet side wall. Stop studs for the lugs have eccentric bushings; adjust these bushings, and the lug positions on the shafts so that parts inside the changeover switch and volume control are relieved of all stopping strain. After the system is operating check the action of the detent spring on the changeover switch shaft lug; the relation between the spring and lug should be such as to insure that a positive OFF position is obtained midway between the R (right) and L (left) positions.

2.11 Belden #8401 Coaxial Cable between reproducers and preamplifier input terminals is 10 ft. and the frequency response correction factors given in section 2.6 of these notes are based on the use of 10 ft. input cables. This is an average length which experience indicates will be satisfactory in the majority of installations.

2.111 Where it is desired to bring all projector wiring up through pedestal bases, the 10 ft. cable length will probably be insufficient in some instances. Longer cables can be accommodated, however, by suitably modifying the amplifier frequency response as specified on main amplifier wiring diagram LMA-2514. In general, satisfactory frequency response can be obtained in this manner with input cables up to about 25 ft. long.

2.112 The cables from both reproducers to preamplifier must obviously be of the same length to prevent differences in frequency response between reproducers. If for some reason they cannot be made physically equal in length, the same electrical effect can be obtained by padding the shorter cable with small condensers on the basis of a cable capacity of 30 micro-micro-farads per foot (for example, a .0001 mf. condenser is equal in effect to a little over 3 feet of cable).

2.12 The main volume control dial controls both reproducer outputs in steps of approximately 2 db. To balance machines lower the signal level of the higher input, as required, by connecting the balancing strap in the preamplifier to the appropriate resistor junction as specified in the preamplifier schematic and wiring diagrams.

2.2 SE-7501 Monitor Speaker - Suspend by its connection conduit from the projection room ceiling approximately seven feet above the floor slightly to the left of the left projector, and in line with the space between projector mechanism and lamphouse.

2.3 SE-7520 Power Unit - Locate in the projection room or in a separate enclosure if local regulations require it. The location must have adequate ventilation to carry off heat developed in the power unit.

2.4 Power Circuits - In addition to the sound system conduit specified in drawing LSS-7518, separately fused 115 volt, 60 cycle power circuits are required at each projector pedestal for the driving motor. The AC circuit to the amplifier should be provided with a suitable switch, at the panel board or in the line, since the switch on the amplifier chassis is intended for use only during amplifier servicing. Motor circuits should be fused at 15 amperes, or with Fusetrons of the correct rating for 1/6 HP motors. Amplifier circuit fuses should not exceed 3 amperes, or 2.5 ampere Fusetrons may be used. Power unit circuit should be fused only for wiring protection (15 amperes), since protective fuses are provided inside the unit. All power circuits must be at least #14 BRC except motor feed circuits, which should be not less than #12 BRC.

2.5 Speaker System (Refer to E.B. SE-7508 Loud Speaker System.)

2.6 Correction factors for SH-7500 or Model MK Reproducers plus system amplifiers for certain common test reel frequencies. Runs should be taken with a 16 ohm resistance load connected to the "0" and "16" terminals of the main amplifier in place of the stage loudspeaker load. Do not operate the amplifier without a load connected.

Frequency	55	130	300	1KC	3KC	5KC	7KC	8KC
Correction Factors (for equipment as shipped)	0	0	0	0	+1.0	+4.0	+12.0	+18.0

2.61 The above response should be obtained with input cables as specified in section 2.11 and with both the preamplifier and the main amplifier mounted in a single cabinet. If longer input cables are used, or if the preamplifier and main amplifier are mounted in separate cabinets, somewhat lower HF response values will be obtained, the exact amount depending upon the length of added cable. In such cases the HF response may be brought to normal by changing the value of certain shunt condensers in the main amplifier as specified on its diagrams.

2.7 Maximum gain of the amplifier system is approximately 95 db. Pickup losses corresponding to various reproducer exciter lamp currents are as follows (for optical system used in SH-7500 and Model MK Reproducers):

Exciter Lamp Current	Relative Sensitivity
4.0 amperes	-4.0 db
3.8 "	-6.0 db
3.6 "	-8.0 db
3.4 "	-10.0 db

3. M-9A SYSTEMS (For components refer to Chart Pg. 5380.01)

3.1 Where local conditions or regulations prohibit the mounting of a large single amplifier cabinet on the projection room front wall between the projectors, the M-9 System is supplied with a compact control cabinet for the preamplifier alone, and a separate larger cabinet to house the main amplifier. The main amplifier can thus be located at any convenient spot in the projection room.

4. M-9 DUAL SYSTEM (For components refer to Chart Page 5380.01)

4.1 For Dual Channel Systems the conduit layout and connection diagram specified in the main bulletin are replaced by the combination diagram LSS-7525, which shows a suggested rack layout and specifies conduit runs, cable types, and wire sizes. Locate the amplifier rack at least 18" from the projection room wall so as to provide easy access to the switching panel connections. Conduit connections may be brought to the top of the rack as shown, using the trough provided, or conduits may enter the rack from the bottom. Clearance opening at the bottom of the rack is approximately 3" x 18". The rack location should be such as to insure adequate amplifier ventilation, convenient access to monitor volume controls and switching panel, and good visibility of test meters.

4.2 Most of the information given in the main system bulletin applies also to the Dual Channel System with the following exceptions and notes:

Section 2.1 - Applies to preamplifier control cabinet only.

Section 2.4 - Conduit sizes are specified on Drawing LSS-7525. Separately fused AC supply circuits should be provided for each of the two main amplifiers.

Sections 2.6 & 2.7 - System gain and high frequency response will be slightly lower than that given in this section due to the paralleling of amplifier inputs.

4.3 Position "1" on the switching panel connects main amplifier No. 1 to the stage and monitor speakers. In position "1 & 2" both main amplifiers are operated in parallel, although No. 2 amplifier alone serves the monitor speaker. In position "2" No. 2 amplifier is connected to the output circuits.

ASSOCIATED DRAWINGS AND BULLETINS

LSS-7518	M-9 System, Conduit Layout
LSS-7517	M-9 System, Connection Diagram
E. B.	Amplifiers, PA-7505 and MA-7505
APA-2566	PA-7505 Preamplifier, Schematic
APA-2567	PA-7505 Preamplifier, Wiring Diagram
AMA-2513	MA-7505 Amplifier, Schematic
LMA-2514	MA-7505 Amplifier, Wiring Diagram
ASE-7038	SE-7038 Network, Schematic & Wiring Diagram
E. B.	SE-7520 Power Unit
RSE-2622	SE-7520 Power Unit, Schematic & Wiring Diagram
AMA-2512	MA-7502 Amplifier Schematic
PA-2565	PA-7501 Amplifier Schematic
APU-2516	PU-7502 Power Unit Schematic
APU-2514	PU-7502 Power Unit Wiring Diagram
LSS-7519	M9A System Conduit Layout
LSS-7515	M9A System Connection Diagram
LSS-7525	M9 Dual System Connection Diagram
WE-7500	SE-7512 (TA-7478) Switching Panel, Schematic and Wiring Diagram
E. B.	SE-7508 Loudspeaker System
LPA-7025	PA-7015 C.C. & PA-7016 Aux. Controls

1. Sound systems to which these instructions apply are in general those using PA and MA-7505-A Amplifiers such as M-9-C, M-911, M-911-Dual, M-150 and the "DR" drive-in theatre sound systems.

2. Three-machine sound systems are those including three sound reproducers, with their associated pedestals, projector mechanisms and magazines, so that a stand-by machine will always be available in the event of some emergency situation which prevents the operation of one of the machines. In such installations it is advisable to place the machine so that the center, or #2 machine, is on the longitudinal axis of the theatre so as to prevent excessive keystone effects in the projected pictures from the outside machines. The machines are numbered 1, 2 and 3 from left to right facing the screen from the projection room.

3. The system modifications for three-machine operation concern mostly the preamplifier and exciter lamp power supply equipment. Main amplifiers and output amplifiers are installed and operated in accordance with the information in the regular system equipment bulletins and diagrams.

4. An auxiliary preamplifier for the #3 machine is supplied. It consists of a single stage amplifier, constructed on the chassis of a PA-7505-A Amplifier and mounted in a PA-7015 Cabinet modified to have appropriate markings for the changeover control knobs. The cabinet is coded PA-7507. The amplifier is coded PA-7509 and it is identical to the right hand input stage of a PA-7505-A Amplifier except that resistor R-14 in the PEC voltage circuit is 75,000 instead of 100,000 ohms to compensate for there being no PEC load on this side of the circuit, and the plate circuit of the tube is brought out to the "OUTPUT" terminals on the main terminal strip instead of going to a D-1 changeover switch.

5. A specially modified PA-7505-A Preamplifier for machines #1 and #2 is supplied. It is coded PA-7508 and the modifications consist of the addition of an auxiliary terminal strip just above the D-1 changeover switch for the output coaxial cable from #3 machine, and internal modification of the switch to provide four operating positions. Looking at the switch from the shaft end, the first four contacts from the maximum counterclockwise position are strapped together so that the switch arm in this position connects the output of the LH, or #1, input stage of the PA-7508 preamplifier to its center output stage. The next four contacts connect the RH, or #2, input stage to the output stage, and the next four connect the auxiliary terminals for the #3 machine to the output stage. The remaining contacts are strapped together and thence to the amplifier ground circuit to provide for an OFF position as the switch is turned clockwise beyond the three operating positions.

6. The PA-7508 Preamplifier mounts either in a PA-7506 Cabinet, which is a modified version of the PA-7500 Cabinet used in "11"-type sound systems and having lamp substitution resistors and switches in its lower compartment, or in a second PA-7507 Cabinet, in which case the resistors and switches are located in an auxiliary housing (PA-7510 Exciter Lamp Control Cabinet) to be mounted just below the PA-7507 Cabinet. The PA-7507/PA-7510 combination will eventually supersede the PA-7506 when the present stock of the latter unit is exhausted.

7. The resistors, switches, pilot lights and terminal strip in the lower part of the PA-7506 Cabinet, or in the PA-7510 Cabinet, provide facilities for operating the three reproducer exciter lamps in series from the "EXC" output circuit of the sound system's SE-7520 Power Unit. Wiring in this assembly provides for the series connections between the individual terminal pairs for the exciter lamp circuits to each machine. Across each terminal pair is bridged a lamp substitution resistor (equal in resistance to the 9 volt, 4 ampere exciter lamp of the SH-7500 Reproducer) in series with a S.P.S.T. toggle switch. Also across each terminal pair is bridged a 32 volt pilot lamp. In normal operation, with all exciter lamps burning, and with the lamp substitution switches in their OFF positions, these pilot lights burn very dimly since they receive only the 9 volt exciter lamp voltage. When an exciter lamp burns out, however, its associated pilot light receives the full series circuit voltage of approximately 30 volts and hence lights to nearly full brilliancy, thus giving a ready indication as to which lamp in the series circuit is open. If the burned out lamp is not in the active machine the performance may be continued with little delay by snapping the appropriate lamp substitution switch to its ON position, thus restoring the series circuit to normal until the open lamp is replaced.

8. The main volume control in the PA-7508 Preamplifier follows the changeover switch in its circuits and therefore controls the output of whichever machine is in use. Individual input stage balancing controls alongside each input stage tube permit the reproducer output levels to be made equal. The changeover switch and the main volume control may be operated from any operating position by means of the extension rods and knobs which make up the PA-7026 Extension Controls, which replace the normal PA-7016 Extension Controls supplied with 2 machine jobs.

9. Except for the extension wiring to the single stage preamplifier for the #3 machine, systems having three machines are installed, wired and operated in very much the same manner as standard 2 machine jobs. As is outlined in the main system bulletins, the cabinet for the PA-7508 Preamplifier should be mounted as close as possible to the #1 machine. The cabinet for the PA-7509 Preamplifier must be mounted between machines #2 and #3 in a position which will provide good alignment between its control shaft bearings and those on the other cabinet. Since it is usually impossible to get single long control shafts into projection rooms, the PA-7026 Extension Controls include four standard length shafts which are standard except that two have #38 holes drilled in the ends opposite the forked ends to take the PA-2555 Studs of the extra PA-7014 Couplings included in these controls. If the cabinets cannot be located so

ALTEC SERVICE CORPORATION
MOTIOGRAPH
SOUND EQUIPMENT BULLETIN
5-31-49

that these couplings land inside the preamplifier cabinet in the 2-3 operating position, it will be necessary to cut the rods to suit and re-drill the stud holes during installation. Installation and adjustment procedure for the balance of the extension control components is given in the main system bulletins and it applies in the case of 3 machine jobs except for the obvious necessity for adjusting the components to provide for positive detent action for each of three changeover switch operate positions, with the OFF position being at the extreme clockwise switch position rather than being between the #1 and #2 positions.

10. Conduit and wiring runs from the #3 reproducer to its preamplifier are the same as are specified for the usual two reproducers. A separate ground lead should be run from this reproducer to the main system ground junction, for example, and the coaxial cable from its output terminals should connect to the terminals at the RH end of the resistor and condenser mounting strip in the PA-7509 Preamplifier. If possible, this cable should be cut somewhat shorter than the 12" length normally specified so as to aid in balancing the frequency response of the three machines. To avoid excessive differences in HF response between the #3 reproducer and the other two, the output circuit from the PA-7509 to the PA-7508 Preamplifier should be made via the special low capacity coaxial cable furnished with the third machine equipment and the length of cable should not exceed 10 feet. The "PLATE" terminals of the two amplifiers are paralleled via #14 BRC wire and the "6.3V A.C." terminals via KS-7133 two-conductor shielded cordage with its shield strapped to that of the similar cordage bringing tube heater power to the PA-7508 Preamplifier from the main amplifier or amplifier rack. The interconnecting wire and cable mentioned may be run in a single 1" conduit or in two 1/2" conduits run in any desired manner consistent with the 10 foot coaxial cable length limitation. The conduit run will also contain the pair of #14 BRC wires making up the exciter lamp circuit to #3 machine.

11. After all wiring connections are made and checked, turn on the system and test for signal output from three machines as outlined in the system instruction bulletin. Since the SE-7520 Power Units are normally shipped with the various adjustments approximately in the right settings for two exciter lamps, the current in the three lamp series circuit will be low. To adjust it properly, short out all of the exciter current adjusting resistor in the power unit and select for use the power unit plate transformer primary tap which gives the best approximation to 3.8 amperes series exciter lamp circuit current at average line voltage. Under these conditions the voltage at the "SPKR" terminals for the loudspeaker field circuit will be somewhat above the 24 volt nominal rating of the units but so long as the voltage measured at the unit field terminals does not exceed 30 volts their performance and life will not be adversely affected. In systems having PM loudspeakers needing no field supply this consideration of course does not apply and it is merely necessary to adjust the exciter lamp circuit current to the 3.8 ampere value by means of the plate transformer primary taps and the adjusting resistor.

12. The winding in the MA-7505-A Amplifier power transformer which supplies heater power to the preamplifier tubes has sufficient capacity to carry the additional preamplifier tube safely and the small additional voltage drop in the heater circuit will not reduce the heater terminal voltage sufficiently to affect tube performance. The additional plate current taken by the extra preamplifier tube would drop the plate voltage appreciably, but this tendency is compensated by changing R-6 in the MA-7505-A Amplifier (in both MA-7505-A Amplifiers in dual-type systems) from 30,000 ohms to 25,000 ohms. This change will ordinarily have been made in the amplifiers before shipment in three machine systems, but it should be checked when the amplifiers are installed.

ASSOCIATED DRAWING - LSS-7568

LSS-7568

CHANGES
ISSUE NO. 1 8/10/48.

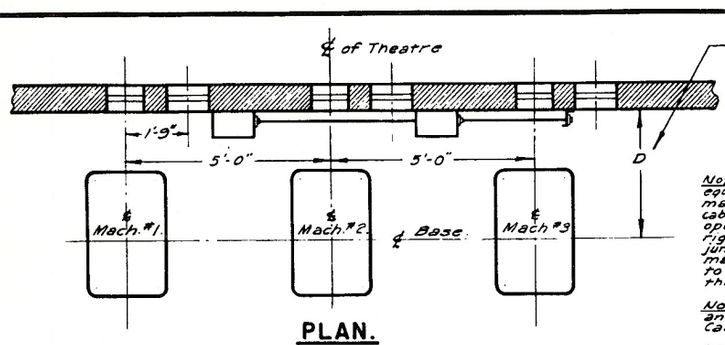

Dimension "D" varies with projection angle. See Motiograph Dwg. SSK-687 (for "AA" Base) or Dwg. SSK-688 (for "S" Base)

PLAN.

Note 1. 1" Conduit to system main amplifier equipment may run from top or bottom, or may enter junction box in wall back of cabinet. ¾" Conduits to machines may be open flexible type (Greenfield) or may be rigid concealed type extending from junction box down wall and up under machine bases. If possible, conduit runs to machines should not require more than 12 ft. #SE-2522 Coaxial Cable.

Note 2. SE-2522 Coaxial Cable (RG-62-U Type) and KS-7133 Cordage (2-Conductor Shielded Cable) are supplied as part of sound system.

Note 3. Route 1-inch Conduit between PA-7507 Cabinets so that SE-2522 Cable will be as short as possible.—not over 10 ft. long. Cut SE-2522 Cables to Machines 1 and 2 12 ft. long, storing any excess in PA-7507 Cabinet #1. Make SE-2522 Cable from PA-7507 Cabinet #2 to Machine #3 as much under 12 ft. long as possible to minimize H.F. response differences.

Note 4. PA-7510, and PA-7507 Cabinets are 12⅝" High × 11½" Wide × 7" Deep. Control Rods are 2⅛" and 5⅝" from top and 2⅝" from rear. Two ½" and one ¾" knockouts each side near bottom. Two ½" and one 1" knockouts top and bottom and one 1" knockout in center rear wall 9" from bottom, except PA-7510 which has two 1" knockouts in rear wall 1½" from top and bottom and six ½" knockouts each side.

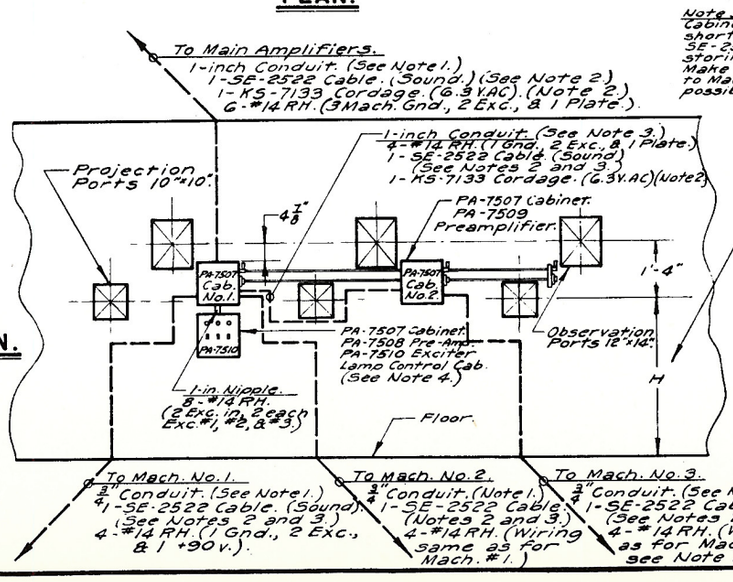

Height "H" varies with projection angle. See Motiograph Dwg. SSK-687 (for "AA" Base) or SSK-688 (for "S" Base).

ELEVATION.

SCALE: 1/2" = 1'-0".
1 0 1 2 3 4 FT.

TITLE
MOTIOGRAPH "9" AND "DR" TYPE SOUND SYSTEMS. PROJECTION ROOM PLAN AND FRONT WALL ELEVATION FOR 3 MACHINE INSTALLATIONS.

MATERIAL —		FINISH —	
DRAWN	CHKD.	APPVD.	DATE 8/10/48.

DRWG. NO. LSS-7568
MOTIOGRAPH INC.
CHICAGO, ILL.

Printed in U.S.A.

1. M-10 SYSTEMS (For components refer to chart, page 5380.01)

1.1 PA-7015 Control Cabinet - Locate on the booth front wall between the two projectors so that the extension rods will clear port holes and other obstructions. Have the cabinet as close as possible to the left machine so that the changeover knob will be easily reached from the left projector operating location. The proper location of the PA-7011 extension control parts is obvious once the preamplifier is in place. The 5/16" flat washers go over the rods inside the cabinet between the detent spring lugs and the cabinet wall. Adjust the position of the stop lugs on the shafts and the eccentric bushings on the stop studs so that the lugs take all stopping strain from the parts inside the changeover switch and volume control. After the system is operating check the adjustment of the lug on the changeover switch shaft; the relation between the lug and its detent spring should be such that a positive OFF position is obtained midway between the R (right) and L (left) positions.

1.11 Belden #8401 Coaxial Cables between reproducers and preamplifier input terminals must be 12 ft. and the frequency response correction factors given in another section of these notes are based on the use of 12 ft. input cables. This is an average length which experience indicates will be satisfactory in the majority of installations. It is suggested that cables be cut 12 ft. long even though this length may not be required in a particular installation, any excess cable may be coiled and stored in the rear of the control cabinet.

1.111 The cables from both reproducers to preamplifier must obviously be of the same length to prevent differences in frequency response between reproducers. If for some reason they cannot be made physically equal in length, the same electrical effect can be obtained by padding the shorter cable with small condensers on the basis of a cable capacity of 30 micro-micro-farads per foot (for example, a .0001 mf condenser is equal in effect to a little over 3 feet of cable).

1.112 Where it is desired to bring all projector wiring up through pedestal bases, the 12 ft. cable length will probably be insufficient in some instances. Longer cables can be accommodated, however, by selecting amplifier response curves having considerable HF rise, although in such cases the correction factors given in these notes will not apply, since they are based on the use of 12 ft. cables. In general, satisfactory frequency response can be obtained in this manner with input cables up to about 25 ft. long.

1.12 For stock reasons, M-10 Sound Systems are sometimes shipped with the type PA-7500 (TA-7468) preamplifier and control cabinet used in the larger systems. This cabinet contains a terminal strip, resistors and switches not included in the PA-7015 Cabinet normally supplied with the M-10 System.

1.121 The resistor bank in the amplifier cabinet serves two functions. The front tapped resistors afford means for balancing machine outputs independently of the regular machine volume controls so that volume control settings may be made identical if desired. A resistor is connected in parallel with each reproducer exciter lamp. As additional sections of the resistor are shorted out with the strap wire provided, the current in the associated exciter lamp is reduced an amount sufficient to lower the reproducer output in steps of approximately two db to a maximum of six db reduction.

1.122 The rear center-tapped resistor in conjunction with the toggle switches on either side of the amplifier cabinet permits operation on the other projector to be continued in case of exciter lamp burn out on one machine. Throwing either switch to its "ON" position substitutes half of resistor R-1 (WE-7505) for the exciter lamp in the associated reproducer so that operation of the series exciter lamp circuit may continue. In normal operation, both switches should be left in their OFF positions.

1.2 MA-7000 Cabinet for the TA-7467-A Amplifier - Locate at any convenient, well ventilated point in the projection room. The front of the cabinet should be easily accessible for service and adjustment of monitor volume control. The cabinet may be mounted on the front wall under the preamplifier and control cabinet provided a minimum five inch space is left between for ventilation.

1.3 SE-7501 Monitor Speaker - Suspend by its connection conduit from the projection room ceiling approximately seven feet above the floor slightly to the left of the left projector, and in line with the space between projector mechanism and lamphouse.

1.4 SE-7520 Power Unit - Locate in the projection room or in a separate enclosure if local regulations require it. The location must have adequate ventilation to carry off heat developed in the power unit.

1.5 Power Circuits - In addition to the sound system conduit specified in drawing LSS-7523, separately fused 115 volt, 60 cycle power circuits are required at each projector pedestal for the driving motor. The AC circuit to the amplifier should be provided with a suitable switch, at the panel board or in the line, since the switch on the amplifier chassis is intended for use only during amplifier servicing. Motor circuits should be fused at 15 amperes, or with Fusetrons of the correct rating for 1/6 HP motors. Amplifier circuit fuses should not exceed 3 amperes, or 2.5 ampere Fusetrons may be used. Power unit circuit should be fused only for wiring protection (15 amperes), since protective fuses are provided inside the unit. All power circuits should be not less than #14 BRC except motor feed circuits, which should be at least #12 BRC. Connect the

grounded side of the line to the silver "AC LINE" terminal on the TA-7467-A type Amplifier.

1.6 SE-7508 Speaker System - Refer to Equipment Bulletin.

1.7 Correction factors for SH-7500 Reproducer composed of SH-2671, 9 volt, 4 ampere Exciter Lamp, SH-2526 Lens Tube, SH-2725 (or W.E. 6-A) Photocell, and 12 feet Belden #8401 Cable between SH-7500 Reproducer and TA-7466-A Preamplifier.

Frequency	55	130	300	1KC	3KC	5KC	7KC	8KC
Correction Factor (db)	0	0	0	0	3.0	6.6	10.8	13.0

1.71 Amplifiers are usually shipped connected in accordance with equalization conditions (B) and (K). (See Amplifiers TA-7466-A and TA-7467-A). The total system correction factors for these conditions are thus as follows:

Frequency	55	130	300	1KC	3KC	5KC	7KC	8KC
Amplifiers	-0.1	0.7	1.4	0	-3.6	-4.1	-3.2	-2.4
Reproducers	0	0	0	0	3.0	6.6	10.8	13.0
Total	-0.1	0.7	1.4	0	-0.6	2.5	7.6	10.6

1.8 Maximum gain of the amplifier system for all equalization connections is 95 db. For system gain measurements in transmission tests the following tabulation of relative sensitivity ("Pickup loss") of the SH-7500 Reproducer at various exciter lamp currents will be useful.

Exciter Lamp Current	Relative Sensitivity (db)
4.0 amperes	-4.0
3.8 "	-6.0
3.6 "	-8.0
3.4 "	-10.0

2. M-10 DUAL SYSTEM (For components refer to chart, page 5380.01)

2.1 Double channel M-10 Systems include an additional main amplifier, an amplifier switching panel, a rack and blank panels, and a rack conduit connection trough. The two main amplifiers are provided with rack mounted cabinets, and the preamplifier is provided with a compact control cabinet to be located on the projection room front wall between the projectors. The switching panel provides facilities for connecting either or both main amplifiers into the circuit.

2.2 For double channel systems the conduit layout and connection diagram specified in the main bulletin are replaced by the combination diagram LSS-7522, which shows a suggested rack layout and specifies conduit runs, cable types, and wire sizes. Locate the amplifier rack at least 18" from the projection room wall so as to provide easy access to the switching panel connections. Conduit connections may be brought to the top of the rack as shown, using the trough provided, or conduits may enter the rack from the bottom. Clearance opening at the bottom of the rack is approximately 3" x 18". The rack location should be such as to insure adequate amplifier ventilation, convenient access to monitor volume controls and switching panel, and good visibility of test meters.

2.3 Most of the information given in Section 1 applies also to the double channel system with the following exceptions and notes:

Section 1.2 does not apply.

Section 1.5. The AC supply circuits to the two TA-7476-A Amplifiers should be separately fused, if possible, though a single line switch is sufficient.

2.4 Position "1" on the switching panel connects the upper, or No.1 TA-7467-A Amplifier to the stage and monitor speakers. In the center, or "1 & 2" position, both TA-7467-A Amplifiers are operated in parallel, although No. 2 (lower) Amplifier alone serves the monitor speaker. In position "2", No. 2 Amplifier alone is connected to the output circuits. The switch should not be operated during a performance except in case of emergency as heavy clicks in the output result from breaking the various input and D.C. circuits.

ASSOCIATED DRAWINGS AND BULLETINS

LSS-7523	Conduit Layout
LSS-7521	M-10 Sound System, Connection Diagram
ASE-7038	SE-7038 Network, Schematic and Wiring Diagram
E. B.	SE-7520 Power Unit
RSE-2622	SE-7520 Power Unit, Wiring Diagram and Schematic
E. B.	TA-7466-A Amplifier
WE-7539	TA-7466-A Amplifier, Schematic Diagram
WE-7540	TA-7466-A Amplifier, Wiring Diagram
E. B.	TA-7467-A Amplifier
WE-7537	TA-7467-A Amplifier, Schematic Diagram
WE-7538	TA-7467-A Amplifier, Wiring Diagram
WE-7517	TA-7468 Control Cabinet and TA-7469 Auxiliary Controls Assembly
WE-7505	Lamp Adjustment Schematic
LSS-7522	M-10 Dual System, Connection Diagram
WE-7500	SE-7512 Switching Panel, Schematic and Wiring Diagram
E. B.	SE-7508 Loudspeaker System
LPA-7025	PA-7015 C.C. & PA-7016 Aux. Controls

Issued by
Engineering Department
Printed in U. S. A.

1. M-11 SYSTEMS (For components refer to chart, page 5380.01)

1.1 PA-7500 (TA-7468) Control Cabinet - Locate on the booth front wall between the two projectors so that the extension control rods will clear port holes and other obstructions. Have the cabinet as close as possible to the left machine so that the changeover knob will be easily reached from the left projector operating location. In assembling the extension controls refer to Drawing WE-7517 for proper location of the various parts. The 5/16" flat washers go over the rods inside the cabinet between the detent stop lugs and the cabinet wall. Adjust the position of the stop lugs on the shafts, and the eccentric bushings on the stop studs so that the lugs take all stopping strain from the parts inside the changeover switch and volume control. After the system is operating check the adjustment of the lug on the changeover switch shaft; the relation between the lug and its detent spring should be such that a positive OFF position is obtained.

1.11 Belden #8401 Coaxial Cables between reproducers and preamplifier input terminals must be 12 ft. and the frequency response correction factors given in another section of these notes are based on the use of 12 ft. input cables. This is an average length which experience indicates will be satisfactory in the majority of installations. It is suggested that cables be cut 12 ft. long even though this length may not be required in a particular installation, any excess cable may be coiled and stored in the rear of the control cabinet.

1.111 The cables from both reproducers to preamplifier must obviously be of the same length to prevent differences in frequency response between reproducers. If for some reason they cannot be made physically equal in length, the same electrical effect can be obtained by padding the shorter cable with small condensers on the basis of a cable capacity of 30 micro-micro-farads per foot (for example, a .0001 mf condenser is equal in effect to a little over 3 feet of cable).

1.112 Where it is desired to bring all projector wiring up through pedestal bases, the 12 ft. cable length will probably be insufficient in some instances. Longer cables can be accommodated, however, by selecting amplifier response curves having considerable HF rise, although in such cases the correction factors given in these notes will not apply, since they are based on the use of 12 ft. cables. In general, satisfactory frequency response can be obtained in this manner with input cables up to about 25 ft. long.

1.12 The resistor bank in the lower part of the preamplifier cabinet serves two functions. The front tapped resistors afford means for balancing machine outputs independently of the regular machine volume controls so that volume control settings may be made identical if desired. A resistor is connected in parallel with each reproducer exciter lamp. As additional sections of the resistor are shorted out with the strap wire provided, the current in the associated exciter lamp is reduced an amount sufficient to lower the reproducer output in steps of approximately two db to a maximum of six db reduction.

1.13 The rear center-tapped resistor in conjunction with the toggle switches on either side of the amplifier cabinet permits operation on the other projector to be continued in case of exciter lamp burn out on one machine. Throwing either switch to its ON position substitutes half of resistor R-1 (WE-7505) for the exciter lamp in the associated reproducer so that operation of the series exciter lamp circuit may continue. In normal operation, both switches should be left in their OFF positions.

1.2 MA-7000 Cabinet for the TA-7467-A Amplifier - Locate at any convenient, well ventilated point in the projection room. The front of the cabinet should be easily accessible for service and adjustment of monitor volume control. The Cabinet may be mounted on the front wall under the preamplifier and control cabinet provided a minimum five inch space is left between for ventilation.

1.3 SE-7501 (TA-7472) Monitor Speaker - Suspend by its connection conduit from the projection room ceiling approximately seven feet above the floor slightly to the left of the left projector, and in line with the space between projector mechanism and lamphouse.

1.4 TA-7471 Power Unit - Locate in the projection room or in a separate enclosure if local regulations require it. The location must have adequate ventilation to carry off heat developed in the power unit. Output terminals are located behind the removable condenser guide panel in the lower section. Before operating the unit, turn all control rheostats to their extreme counter-clockwise positions.

(a) Make the adjustments when the line voltage is at or near its average value. Turn power unit switch to "OFF".
(b) Remove the cover plate from the transformer compartment, and connect a D.C. voltmeter (0-25 scale) across the "BAL.LAMP VOLTAGE" terminals. Connect the T-1 primary tap to the "125" terminal and the secondary taps to the #1 or "LOW" terminals if they are not found connected in this manner.
(c) Connect a D.C. ammeter (0-10 scale) across the "EXC.LAMP CURRENT" terminals and open the strap.
(d) Turn the power unit switch to "ON" and permit the unit to assume normal operating temperature.
(e) Adjust the "EXC.LAMP SERIES RESISTANCE" R-1 so that the exciter current is 4 amperes, and the "EXC. LAMP SHUNT RESISTANCE" R-2 so that the ballast lamp voltage is 12 volts. Make these adjustments successively, as they react on each other, and allow a minimum of 10 seconds between changes to permit the ballast lamp temperature to stabilize.

Issued by
Engineering Department
Printed in U. S. A.

NOTE: If the stated values cannot be obtained within the ranges of the rheostats, move the primary tap on the T-1 power transformer to a lower numbered terminal. For extremely low line voltage or exceptionally high circuit resistance conditions it may be necessary to move both secondary taps to higher numbered terminals.

(f) After the exciter lamp and ballast lamp circuit is adjusted, measure the voltage at the loudspeaker unit field terminals on the stage. Set this voltage as closely as possible to 24 volts with R-4, "L.S. FIELD" rheostat.

(g) Shut off power unit, disconnect meters, close strap on "EXEC. LAMP CURRENT" terminals and replace cover plates.

1.5 Power Circuits - In addition to the AC circuits shown, separately fused 115 volt, 60 cycle power circuits are required at each projector pedestal for the driving motor. The amplifier power circuits must be provided with switches, or a single safety switch may be installed in the feed circuit to the fuse panel to turn off or on the entire sound system. Motor circuits should be fused at 15 amperes, or with Fusetrons of the correct rating for 1/6 H.P. motors. Power Unit circuit fuses should be of 10 ampere rating. Amplifier circuit fuses should not exceed 3 ampere rating, or 2 ampere Fusetrons may be used. All power circuits must be at least #14 BRC except motor feed circuits, which should be not less than #12 BRC. At the TA-7467 type Amplifiers connect the grounded side of the AC circuits to the silver "AC LINE" terminals.

1.6 Speakers - Refer to E.B. SE-7511 Loudspeaker System.

1.7 Correction factors for SH-7500 Reproducer composed of SH-2671, 9 volt, 4 ampere Exciter Lamp, SH-2526 Lens Tube, SH-2725 (or W.E. 6-A) Photocell, and 12 feet Belden #8401 Cable between SH-7500 Reproducer and TA-7466-A Preamplifier.

Frequency	55	130	300	1KC	3KC	5KC	7KC	8KC
Correction Factors (db)	0	0	0	0	3.0	6.6	10.8	13.0

1.71 Amplifiers are usually shipped connected in accordance with equalization conditions (B) and (K). See TA-7467-A and TA-7466-A Amplifiers. The total system correction factors for these conditions are thus as follows:

Frequency	55	130	300	1KC	3KC	5KC	7KC	8KC
Amplifiers	-0.1	0.7	1.4	0	-3.6	-4.1	-3.2	-2.4
Reproducer	0	0	0	0	3.0	6.6	10.8	13.0
Total	-0.1	0.7	1.4	0	-0.6	2.5	7.6	10.6

1.8 Maximum gain of the amplifier system for all equalization connections is 95 db. For system gain measurements in transmission tests the following tabulation of relative sensitivity ("pickup loss") of the SH-7500 Reproducer for various exciter lamp currents will be useful.

EXCITER LAMP CURRENT	RELATIVE SENSITIVITY (db)
4.0 amperes	-4.0
3.8 "	-6.0
3.6 "	-8.0
3.4 "	-10.0

2. M-11 DUAL SYSTEMS (For components refer to chart, page 5380.01)

2.1 Double channel M-11 Systems include an additional TA-7467 type Amplifier, an amplifier switching panel, a rack and blank panels, a rack conduit connection trough, an additional HF speaker unit, a double throat for the HF cellular horn, and a transformer to match the impedance of the parallel H.F. speaker units to the network. The switching panel provides facilities for connecting either or both TA-7467 type Amplifiers into the circuit.

2.2 For double channel systems the conduit layout and connection diagram specified in the main bulletin are replaced by the combination diagram LSS-7514, which shows a suggested rack layout and specifies conduit runs, cable types, and wire sizes. Locate the amplifier rack at least 18" from the projection room wall so as to provide easy access to the switching panel connections. Conduit connections may be brought to the top of the rack as shown, using the trough provided, or conduits may enter the rack from the bottom. Clearance opening at the bottom of the rack is approximately 3" x 18". The rack location should be such as to insure adequate amplifier ventilation, convenient access to monitor volume controls and switching panel, and good visibility of test meters.

Issued by
Engineering Department
Printed in U. S. A.

2.3 Most of the information given under Section 1 applies also to the double channel system except for changes incident to having two rack mounted main amplifiers and two HF loudspeaker units. The impedance matching transformer for the HF units may be mounted in the speaker compartment of the LF folded horn near the network. The two HF units will operate in phase with each other if connections are made as shown in the diagram, but correct space phasing between the complete HF speaker assembly and LF folded horn must be determined by trial after the system is operating and after the angle of tilt of the HF speaker is adjusted for best distribution in the auditorium.

2.4 Position "1" on the switching panel connects main amplifier No. 1 to the stage and monitor speakers. In position "1 & 2" both main amplifiers are operated in parallel, although No. 2 amplifier alone serves the monitor speaker. In position "2" No. 2 amplifier is connected to the output circuits.

3. M-13A SYSTEMS (For components refer to chart, page 5380.01)

3.1 The M-13A system is similar to the M-11 Dual system with the following additions and/or substitutions:

3.11 TA-7380 Fuse Cabinet provides fused circuits for the power unit and to the two main amplifiers. Power unit circuit fuses should not be larger than 10 amperes; amplifier circuit fuses should not exceed 3 amperes, or 2.5 ampere Fusetrons may be used. The AC switches provided on power unit and amplifiers are intended only for convenience in testing, and a suitable 20 ampere master switch should therefore be provided in the AC line serving the TA-7380 Fuse Cabinet.

3.12 TA-7396 Baffle, SE-7049 LF Speaker, SE-7016 HF Horn, SE-7015 HF Speaker - Assemble the low frequency speaker section, framework, and baffle wings on the stage behind the screen, and mount the speaker units. Assemble the high frequency horn, double horn throat and high frequency speaker units. This assembly may be supported from the baffle structure, or it may be hung from lines. Tilt the horn as required to evenly distribute its output over the seating area of the theatre. When the angle of tilt is determined, adjust the relative positions of the low and high frequency speaker assemblies so that the high frequency horn mouth is as close as possible to the screen surface, and the center lines of all speaker unit diaphragms are in the same vertical plane. These center lines for the L.F. units are at a point midway between the cone apex and periphery. The centerline of the H.F. speaker unit diaphragm is at a line approximately determined by the junction between the rear cover and the body of the unit. If all connections to the speaker units are made exactly in accordance with the wiring diagram, this procedure will result in the high and low frequency speakers being in approximately the correct phase relationship.

3.13 SE-7040 Matching Transformer - Mount inside a suitable junction box as shown on the wiring diagram No. WE-7513. It is essential that the output of the HF channel from the SE-7018 Network be connected, as shown on wiring diagram WE-7513, to the SE-7040 Matching Transformer.

ASSOCIATED DRAWINGS AND BULLETINS

LSS-7512	Conduit Layout
LSS-7513	Connection Diagram
WE-7502	TA-7471 Power Unit Schematic
WE-7501	TA-7471 Power Unit Wiring Diagram
SE-7018	SE-7018 Network Schematic
E.B.	TA-7466 Amplifier
WE-7539	TA-7466 Amplifier Schematic
WE-7540	TA-7466 Amplifier Wiring Diagram
WE-7517	TA-7468 Control Cabinet & TA-7469 Aux. Controls, Assembly
WE-7505	Lamp Adjustment Schematic
E.B.	TA-7467 Amplifier
WE-7537	TA-7467 Amplifier Schematic
WE-7538	TA-7467 Amplifier Wiring Diagram
LSS-7514	M-11 Sound System (Double Channel), Connection and Conduit Diagram
WE-7500	SE-7512 (TA-7478) Switching Panel, Schematic and Wiring Diagram
WE-7514	M-13-A System, Conduit Layout
WE-7513	M-13-A System, Wiring Diagram
WE-7509	M-13-A System, Schematic
WE-7552	TA-7396 Baffle, Assembly (Photo)
E.B.	SE-7511 Loudspeaker System

Issued by
Engineering Department
Printed in U. S. A.

ALTEC SERVICE CORPORATION

M-13 SYSTEM SCHEMATIC

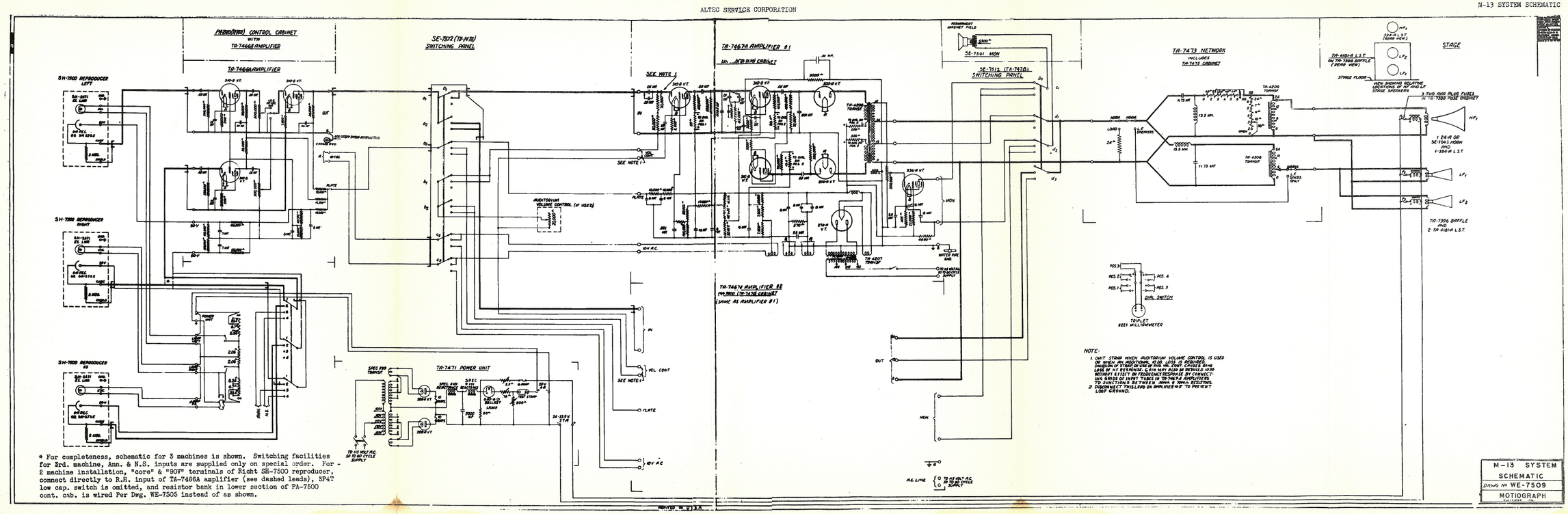

* For completeness, schematic for 3 machines is shown. Switching facilities for 3rd. machine, Ann. & N.S. inputs are supplied only on special order. For 2 machine installation, "core" & "90V" terminals of Richt SH-7500 reproducer, connect directly to R.H. input of TA-7466A amplifier (see dashed leads), 5P4T low cap. switch is omitted, and resistor bank in lower section of PA-7500 cont. cab. is wired Per Dwg. WE-7505 instead of as shown.

NOTE:

1. CHIT STRIP WHEN AUDITORIUM VOLUME CONTROL IS USED OR WHEN AN ADDITIONAL 40 DB LOSS IS REQUIRED. OMISSION OF STRIP OR USE OF MID. VOL. CONT. CAUSES SAME LOSS OF HI RESPONSE. GAIN MAY ALSO BE REWILD 1030 WITHOUT EFFECT ON FREQUENCY RESPONSE. BY CORRECTING SHIELDS OF INPUT TUBES IN TA-7467-A AMPLIFIERS. TO JUNCTION B BETWEEN 300Ω & 300Ω-A RESISTORS.
2. DISCONNECT TWISTLOK ON AMPLIFIER #1 TO PREVENT LOOP GROUND.

M-13 SYSTEM SCHEMATIC	
DRWG NO	WE-7509
MOTIOGRAPH	

5385.30

M-13-A SYSTEM SCHEMATIC

ALTEC SERVICE CORPORATION

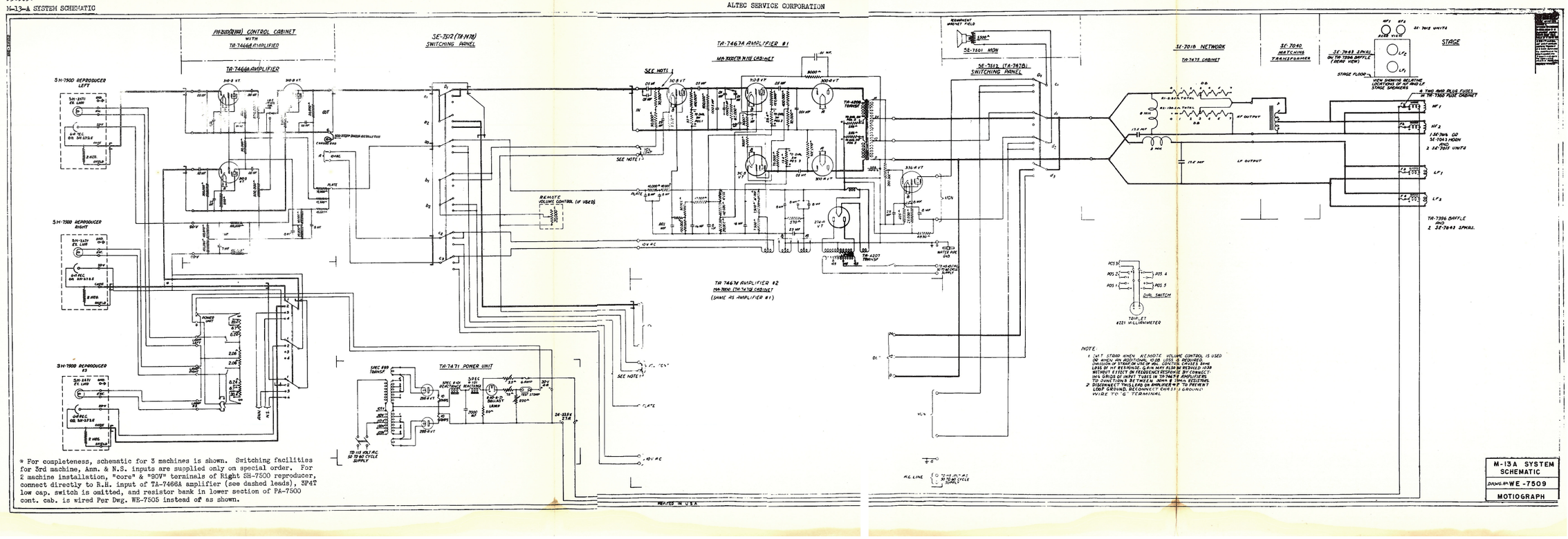

* For completeness, schematic for 3 machines is shown. Switching facilities for 3rd machine, Ann. & N.S. inputs are supplied only on special order. For 2 machine installation, "core" & "90V" terminals of Right SH-7500 reproducer, connect directly to R.H. input of TA-7466A amplifier (see dashed leads), 3P4T low cap. switch is omitted, and resistor bank in lower section of PA-7500 cont. cab. is wired Per Dwg. WE-7505 instead of as shown.

M-13A SYSTEM SCHEMATIC

DWG.# WE-7509

MOTIOGRAPH

PRINTED IN U.S.A.

1. M-14-A and M-15-A SYSTEMS are identical except for the inclusion of an additional W. E. 87 type Amplifier in the M-15-A System, making the power output 100 watts instead of 50 watts, the output power of the M-14-A System. The loudspeaker system is also larger since two additional HF units are provided in the M-15-A System to handle the increased power, and two 32 cell HF horns with double throats replace the single 60 cell HF horn used in the M-14-A System. Amplification and switching equipment is mounted on a single large rack in the M-14-A System, and on two shorter racks in the M-15-A System. For components refer to chart on page 5380.01.

2. Conduit layouts shown on Dwg. WE-7516 are suggested arrangements only. For example, the power units may be located in a separate room if local regulations require it, and the network cabinet may be mounted on the stage wall if it is desired to reduce the number of wires required between booth and stage from six to four, or if rack space is needed for auxiliary equipment such as a phonograph pickup and turntable, control track equipment, etc. Conduits to amplifier racks may enter the bottoms of the racks (clearance space is 3" x 18") in concealed conduit installations. The D.C. output circuits from the power units need not come to the racks, as shown, if local conditions indicate that conduit installations would be simplified, by running a separate 1/2" conduit from the TA-7471 Power Unit directly to the PA-7500 Control Cabinet, and another 1/2" conduit from the power unit which serves the stage loudspeaker unit fields to a junction box in the conduit line to the stage.

3. PA-7500 (TA-7468 type) Control Cabinet - Locate on the booth front wall between the two projectors so that the extension control rods will clear port holes and other obstructions. Have the cabinet as close as possible to the left machine so that the changeover knob will be easily reached from the left projector operating location. In assembling the extension controls refer to Dwg. WE-7517 for proper location of the various parts. The 5/16" flat washers go over the rods inside the cabinet between the detent stop lugs and the cabinet wall. Adjust the position of the stop lugs on the shafts, and the eccentric bushings on the stop studs so that the lugs take all stopping strain from the parts inside the changeover switch and volume control. After the system is operating check the adjustment of the lug on the changeover switch shaft; the relation between the lug and its detent spring should be such that a positive OFF position is obtained.

3.1 Belden #8401 coaxial cables between reproducers and preamplifier input terminal must be 12 feet, and the frequency response correction factors given in another section of these notes are based on the use of 12' input cables. This is an average length which experience indicates will be satisfactory in the majority of installations. It is suggested that cables be cut 12' long even though this length may not be required in a particular installation; any excess cable may be coiled and stored in the rear of the preamplifier and control cabinet.

3.11 The cables from both reproducers to preamplifier must obviously be of the same length to prevent differences in frequency response between reproducers. If for some reason they cannot be made physically equal in length, the same electrical effect can be obtained by padding the shorter cable with small condensers on the basis of a cable capacity of 30 micro-micro-farads per foot (for example, a .0001 mf. condenser is equal in effect to a little over 3 feet of cable).

3.12 Where it is desired to bring all projector wiring up through pedestal bases, the 12' cable length will probably be insufficient in some instances. Longer cables can be accommodated, however, by selecting amplifier response curves having considerable HF rise, although in such cases the correction factors given in these notes will not apply, since they are based on the use of 12' cables. In general, satisfactory frequency response can be obtained in this manner with input cables up to about 25' long.

3.2 The resistor bank in the lower part of the preamplifier cabinet serves two functions. The front tapped resistors afford means for balancing machine outputs independently of the regular machine volume controls so that volume control settings may be made identical if desired. A resistor is connected in parallel with each reproducer exciter lamp. As additional sections of the resistor are shorted out with the strap wire provided, the current in the associated exciter lamp is reduced an amount sufficient to lower the reproducer output in steps of approximately two db to a maximum of six db reduction.

3.3 The rear center-tapped resistor in conjunction with the toggle switches on either side of the amplifier cabinet permits operation on the other projector to be continued in case of exciter lamp burnout on one machine. Throwing either switch to its ON position substitutes half of resistor R-1 (WE-7505) for the exciter lamp in the associated reproducer so that operation of the series exciter lamp circuit may continue. In normal operation, both switches should be left in their OFF positions.

4. TA-7467-A Amplifiers - If use of the remote volume control feature provided is never contemplated, the wiring shown between "VOL. CONT." terminals on these amplifiers and the switching panel need not be installed. These terminals should then be strapped on both amplifiers to prevent loss of gain and HF response. If wiring to the switching panels is installed, the same electrical results can be accomplished by strapping terminals 10 and 21 on TS-1 of the switching panel.

5. Power Units must be mounted in a location having adequate ventilation to carry off the heat they develop. Output terminals are located behind the removable condenser guide panels in the lower sections of the cabinets. For concealed conduit installations suitable entrance holes for connection wires may be cut in the rear walls of the cabinets near the terminal strips.

Issued by
Engineering Department
Printed in U. S. A.

5.1 TA-7471 - Power Unit - Adjustments

(a) Make the adjustments when the line voltage is at or near its average value. Turn power unit switch to "OFF".
(b) Remove the cover plate from the transformer compartment and connect a D.C. voltmeter (0-25 scale) across the "BAL. LAMP VOLTAGE" terminal. Connect the T-1 primary tap to the "125" terminals and the secondary taps to the #1 or "LOW" terminals if they are not found connected in this manner.
(c) Connect a D.C. ammeter (0-10 scale) across the "EXC. LAMP CURRENT" terminals and open the strap.
(d) Turn the power unit switch to "ON" and permit the unit to assume normal operating temperature.
(e) Adjust the "EXC. LAMP SERIES RESISTANCE" R-1 so that the exciter current is 4 amperes, and the "EXC. LAMP SHUNT RESISTANCE" R-2 so that the ballast lamp voltage is 12 volts. Make these adjustments successively, as they react on each other, and allow a minimum of 10 seconds between changes to permit the ballast lamp temperature to stabilize.

NOTE: If the stated values cannot be obtained within the ranges of the rheostats, move the primary tap on the T-1 power transformer to a lower numbered terminal. For extremely low line voltage or exceptionally high circuit resistance conditions it may be necessary to move both secondary taps to higher numbered terminals.

(f) Shut off power unit, disconnect meters, close strap on "EXC. LAMP CURRENT" terminals and replace cover plates.

5.2 TA-4144-A Power Unit - Adjustments

(a) Change the shorting strap (flexible clip lead on panel) associated with R-1 and R-5 so that the voltage measured at the loudspeaker unit terminals on the stage is as close as possible to being 24 volts at average A.C. line voltage.
(b) Set shorting strap for R-2 to 8 amp. position.

5.3 SE-7520 Power Unit - (For stock reasons) may be substituted for the TA-4144-A Power Unit called for on the diagrams covering the M-14-A and M-15-A Systems. The performances of the two power units are identical, but methods of connection and adjustment differ to some extent. See "Power Unit, SE-7520" and Drawing RSE-2622, the combination schematic and wiring diagram for this unit.

5.31 AC line fuses are provided in the SE-7520 Power Unit. At the discretion of the installation engineer these may be strapped out in favor of a single fuse of the correct size (6 ampere) at the sound system power distribution cabinet (TA-7380).

5.32 No connection is made to the "EXC" output terminals of the SE-7520 Power Unit when it is used as a substitute for the TA-4144-A. The stage loudspeaker unit field circuit is connected to the "GND-NEG" and "4 SPKR" terminals; the wire to the system ground also connects to the "GND-NEG" terminals. A 10 ampere plug fuse should be used in the "SPKR" position of the output fuse block instead of the 3 ampere fuse called for on the power unit diagrams.

6. SE-7501 (TA-7472 type) Monitor Speaker - Suspend by its connection conduit from the projection room ceiling approximately seven feet above the floor slightly to the left of the left projector and in line with the space between projector mechanism and lamphouse.

7. TA-7380 Fuse Cabinet - Provides separately fused circuits for each power unit and amplifier. Switches as shown should be installed in the circuit to the TA-7467-A Amplifiers since the chassis switches on these amplifiers are intended only for convenience in testing. These switches may be omitted if the service line to the TA-7380 Fuse Cabinet is provided with a suitable disconnect switch. Power units and 87 type amplifiers should be fused at 6 amperes. TA-7467-A Amplifier fuses should be 3 ampere, or 2.0 Ampere Fusetrons may be used. The grounded side of the A.C. circuit should be connected to the tinned "A.C. LINE" terminal at the TA-7467-A Amplifiers, and to the "A.C." terminal nearest the end of the strip in the 87 type amplifiers. At the discretion of the installation engineer, switch contacts at the power units may be parallelled in the ungrounded side of the line, with the grounded side solidly connected to the power unit circuits. Projector driving motor circuits should be at least #12 BRC wire and should be fused at 20 amperes, or with Fusetrons of the correct rating for 1/6 H.P. motors. Separate circuits for each motor, of course, should be provided.

8. Switching Panels - Position "1 and 2" on the SE-7512 Switching Panel is not used in either the M-14-A or the M-15-A System, and the sound system should not be operated with the switch in this position. With the switch in position "1", No. 1 TA-7467-A Amplifier drives the 87 type Amplifier(s); in position "2", No. 2 TA-7467-A Amplifier drives the 87 type Amplifier(s). In the M-14-A System, position "2" on the SE-7512-A Switching Panel connects the input of the stage loudspeakers to the output of the SE-7512 Switching Panel so that either of the TA-7467-A Amplifiers may be used as an emergency amplifier in the event of trouble in the 87 type Amplifier.

8.1 In the M-14-A System, position "2" of the switch on the SE-7512-A Switching Panel is for emergency operation on one or the other of the TA-7467-A Amplifiers alone. In this system, positions "1" and "2" both connect the 87 type Amplifier into the circuit, and for normal operation the switch should be left in one or the other of these positions.

Issued by
Engineering Department
Printed in U. S. A.

8.2 In the M-15-A System having two 87 type amplifiers, the switch on the SE-7512-B Switching Panel connects No. 1 - 87 type Amplifier to the stage loudspeaker system in its "1" position. In the "2" position No. 2 - 87 type Amplifier is connected to the speaker system. The normal operating position is with the switch in its "1 & 2" position, which connects both 87 type amplifiers in parallel to the stage loudspeakers and gives a maximum output power of 100 watts.

9. TA-7397 Baffle - Assemble on the stage behind the screen (refer to Photograph WE-7552-1). Remove the speaker unit mounting boards from the speaker sections of the baffle and fasten them to the four LF speaker units securely with the bolts provided. Then replace boards and units on the baffle; there is considerably less risk of damage to the paper cones if this procedure is followed rather than attempting to mount the units on the boards while they are in place on the baffle.

10. HF Cellular Horn(s), Throat(s) and Units - For standard theatre installations the HF speaker system should be supported with the horn face(s) approximately 1/2 to 2/3 picture height. If the screen is not too large the baffle structure may be used as a support. For larger screens the HF speaker system may be supported from lines, or from suitable scaffolding fastened to the baffle. The supporting means must be arranged to permit adjustment of the angle of tilt and of the longitudinal position of the HF horn system with respect to the baffle for proper phasing. In the M-15-A System the supporting means must also permit adjustment of the angle of flare between the two HF speaker assemblies.

10.1 In the M-14-A System the angle of tilt should be adjusted so as to evenly distribute the sound energy over the seating area of the auditorium or audience space. The 60 cell HF horn gives uniform coverage over a solid angle of about 110 degrees horizontally, and 60 degrees vertically when it is supported with the longest face dimension horizontal. In a relative high and narrow auditorium, more uniform coverage and less possibility of detrimental side wall reflections may result if the horn is mounted with the longer face dimension vertical.

10.2 Each of the 32 cell HF horns in the M-15-A System gives uniform coverage over a solid angle of 90 degrees in the longer face dimension, and over 45 degrees in the shorter face dimension. In very wide theatres it is thus possible to cover almost 180 degrees if the horns are mounted with the longer face dimensions horizontal and are flared the maximum 45 degrees permissible. For very high theatres more uniform coverage may result if the horns are mounted with face dimensions vertical.

10.3 Diaphragms and field coils are not field replaceable.

11. Phasing - HF units will operate in phase with each other and LF units in phase with other LF units if all connections to the units are made in accordance with the wiring diagram. Proper space phasing between the HF speaker system and the LF speaker system is obtained by adjusting the relative longitudinal position of one to the other. There are numerous phasing methods in use. One which gives consistent results is as follows: The HF speaker system is first properly tilted (and flared, in the case of the M-15-A System) to give even distribution of sound energy throughout the audience area as evidenced by listening tests. A sound film reel containing fairly heavy male dialogue is then run. An observer in the audience area is asked to note when the greatest difference in sound quality is noted as the two leads serving the HF speaker system are reversed (this can be done at the network HF output terminals, or at the junction box on the stage wall) for various longitudinal positions of the HF speaker system with respect to the LF baffle. Once the point of maximum difference in quality is determined, even an untrained observer will be able to tell which connection gives best quality. With correct phasing, screen characters appear to be speaking from the screen rather than from some point behind it, and HF sounds are clean and clear, while LF sounds are full without being boomy.

11.1 It is usually desirable to have the HF speaker horn mouths as close as possible to the rear surface of the screen in order to reduce HF sound reflections from this surface. If the point of maximum difference in quality is noted when the HF speaker system is considerably to the rear of the baffle face (and hence some distance from the screen), another point of maximum difference will be noted if the HF speaker system is moved forward approximately 16", at the same time reversing the input leads. This will bring the HF horn mouths ahead of the baffle face; if they touch or run into the screen surface in this position, the entire loudspeaker system can then be moved backward to provide clearance between screen and horn mouths, since the LF speakers need not be close to the screen surface.

12. Balance between HF and LF output may be changed to suit auditorium acoustical conditions by changing the frequency response of the amplifier system as indicated in the following section, and by attenuating the response of the HF channel in the SE-7018 Network. For an auditorium of average acoustical properties, and assuming that the sound screen is in good condition for transmission of sound through its pores, the HF channel will need to be attenuated 2 to 4 db in order to compensate for the greater efficiency of the HF speaker units as compared with the LF units. 7 db reduction is available by changing connections to the attenuator resistors R-1 and R-2 on the network chassis.

13. Correction Factors for the combination of the SH-7500 Reproducer with 12 feet of #8401 cable between it and the TA-7466-A Preamplifier and amplifiers as usually shipped connected in accordance with equalization conditions (b) and (k), are as follows:

Frequency	55	130	300	1KC	3KC	5KC	7KC	8KC
Amplifiers	-0.1	0.7	1.4	0	-3.6	-4.1	-3.2	-2.4
Reproducers	0	0	0	0	3.0	6.6	10.8	13.0
Total	-0.1	0.7	1.4	0	-0.6	2.5	7.6	10.6

13.1 Both TA-7467-A Amplifiers should obviously be equalized in the same manner since they are used interchangeably. No correction factors for the 87 type Amplifiers are required as the frequency response of these amplifiers is essentially flat over the range of 55 cycles to 8 KC.

14. Maximum gain of the amplifier system for all equalization connections is 104 db. For system gain measurements in transmission tests the following tabulation of relative sensitivity ("pickup loss") of the SH-7500 Reproducer for various exciter lamp currents will be useful.

EXCITER LAMP CURRENT	RELATIVE SENSITIVITY (db)
4.0 Amperes	-4.0
3.8 "	-6.0
3.6 "	-8.0
3.4 "	-10.0

ASSOCIATED DRAWINGS AND BULLETINS

WE-7516	M-14-A and M-15-A Systems, Conduit Layout
WE-7515	M-14-A and M-15-A Systems, Wiring Diagram
WE-7508	M-14-A and M-15-A Systems, Schematic
WE-7501	TA-7471 Power Unit, Wiring Diagram
SE-7018	SE-7018 Network, Schematic and Wiring Diagram
WE-7500	SE-7512 (TA-7478) Switching Panel, Schematic and Wiring Diagram
WE-7552	TA-7396 Baffle, Assembly (Photo)
AASO-8518	87-E Amplifier, Schematic Diagram
AASR-4549	87-E Amplifier, Wiring Diagram
E. B.	TA-7466 Type Amplifier
WE-7539	TA-7466 Type Amplifier Schematic
WE-7540	TA-7466 Type Amplifier, Wiring Diagram
WE-7517	PA-7500 (TA-7468) Control Cabinet and PA-7011 (TA-7469) Aux. Controls, Assembly
WE-7505	PA-7500 (TA-7468) Control Cabinet, Schematic and Wiring Diagram
E. B.	TA-7467 Type Amplifier
WE-7537	TA-7467 Type Amplifier, Schematic
WE-7538	TA-7467 Type Amplifier, Wiring Diagram
WE-7502	TA-7471 Power Unit, Schematic

Issued by
Engineering Department
Printed in U. S. A.

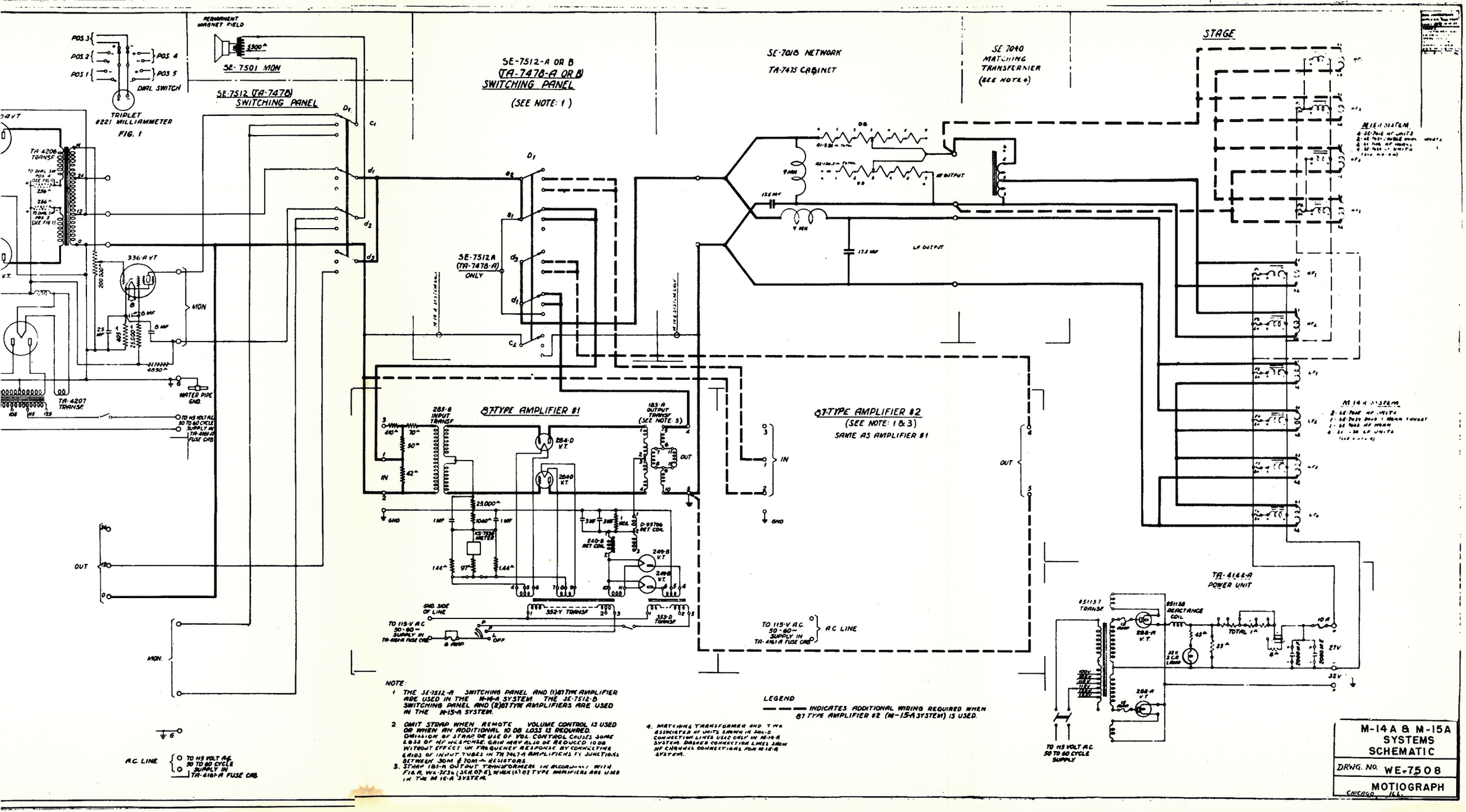

NOTE:

1. THE SE-7512-A SWITCHING PANEL AND (1) 87 TYPE AMPLIFIER ARE USED IN THE M-14-A SYSTEM. THE SE-7512-B SWITCHING PANEL AND (2) 87 TYPE AMPLIFIERS ARE USED IN THE M-15-A SYSTEM.
2. OMIT STRAP WHEN REMOTE VOLUME CONTROL IS USED OR WHEN AN ADDITIONAL 10 DB LOSS IS REQUIRED. OMISSION OF STRAP OR USE OF VOL. CONTROL CAUSES SOME LOSS OF HF RESPONSE. GAIN MAY ALSO BE REDUCED 10 DB WITHOUT EFFECT ON FREQUENCY RESPONSE BY CONNECTING GRIDS OF INPUT TUBES IN TA 7467-A AMPLIFIERS TO JUNCTIONS BETWEEN 30M & 70M Ω RESISTORS.
3. STAMP 183-A OUTPUT TRANSFORMERS IN ACCORDANCE WITH FIG. A, WE-7536 (SCH. 07-E), WHEN (2) 87 TYPE AMPLIFIERS ARE USED IN THE M-15-A SYSTEM.
4. MATCHING TRANSFORMER AND TWO ASSOCIATED HF UNITS SHOWN IN SOLID CONNECTION LINES USED ONLY IN M-14-A SYSTEM. DASHED CONNECTION LINES SHOW HF CHANNEL CONNECTIONS FOR M-15-A SYSTEM.

LEGEND

— — — INDICATES ADDITIONAL WIRING REQUIRED WHEN 87 TYPE AMPLIFIER #2 (M-15-A SYSTEM) IS USED.

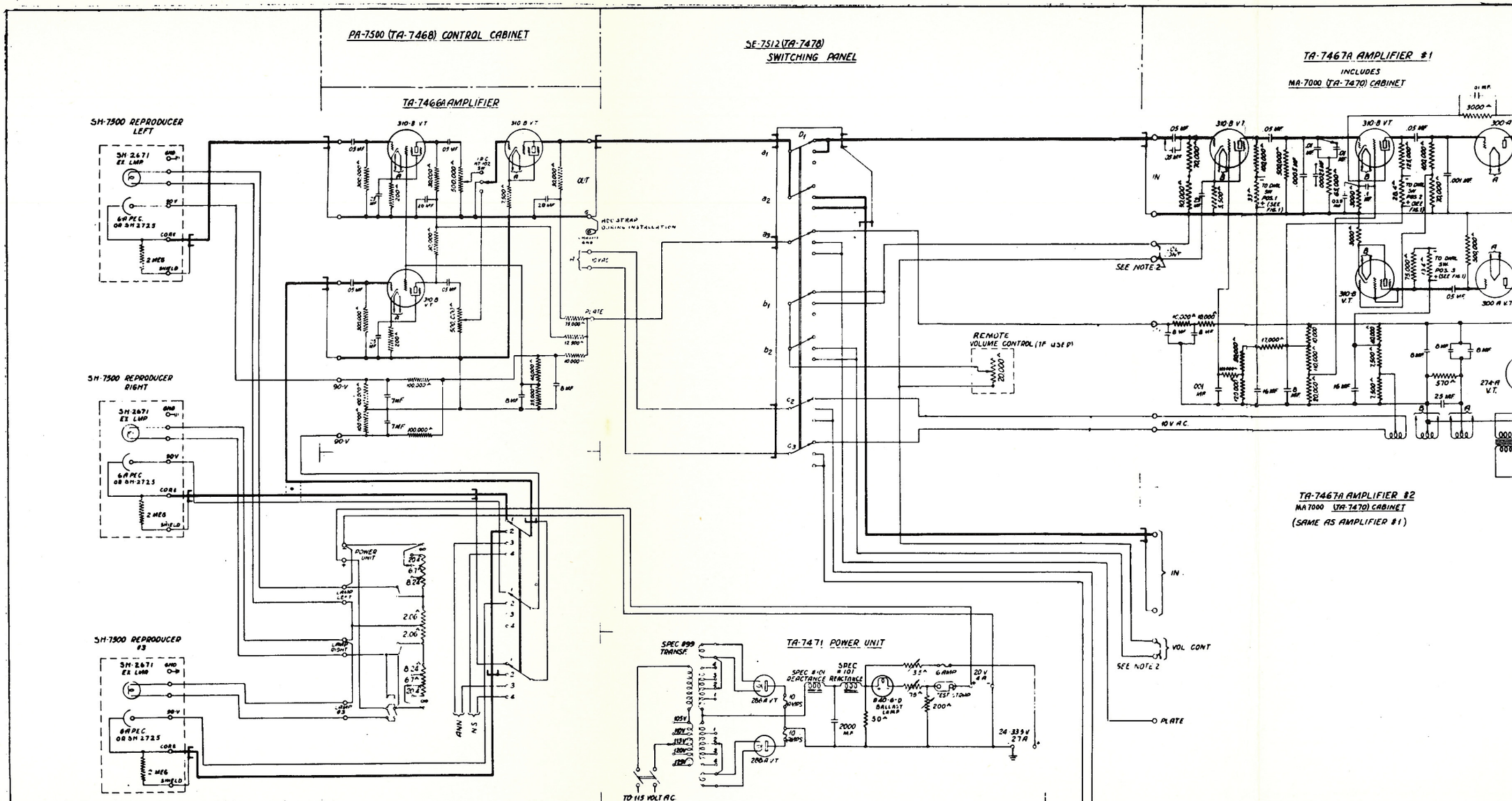

* For completeness, schematic for 3 machines is shown. Switching facilities for 3rd. machine, Ann. & N. S. inputs are supplied only on special order. For 2 machine installation, "core" & "90V" terminals of Right SH-7500 reproducer, connect directly to R.H. input of TA-7466A amplifier (see dashed leads), 3P4T low cap. switch is omitted, and resistor bank in lower section of PA-7500 cont. cab. is wired Per Dwg. WE-7505 instead of as shown.

1. The M-17 SYSTEM is similar to the M-14-A SYSTEM with the following additions and/or substitutions. (Refer to chart, page 5380.01, for component parts)

1.1 PA-7015 Control Cabinet (Refer to Section 3, M-14-A SOUND SYSTEMS, Installation Notes)

1.2 118-A Amplifier (Refer to Equipment Bulletin)

1.3 SE-7512 & SE-7512-A Switching Panels

1.31 The M-17 System may be operated as a 50 watt maximum power output system by setting the SE-7512-A Sw. Panel switch to either its "1" or "1 & 2" position, and the SE-7512 Sw. Panel switch to its "1" (#1 TA-7467-A Amplifier in use as a driver), or "2" position (#2 TA-7467-A Amplifier in use as a driver). In the event of trouble in the 118-A Amplifier, the system may be used with 30 watts maximum power output by turning the SE-7512-A Switch to its "2" position, and the SE-7512 Switch to its "1 & 2" position. Either TA-7467-A Amplifier may be used alone to give 15 watts power output by leaving the SE-7512-A Switch in the "2" position, and turning the SE-7512 Switch to its "1" or "2" position.

1.4 SE-7520 Power Unit (Refer to Section 5, M-14-A SYSTEMS, Installation Notes)

1.41 The #1 Power Unit serves only the exciter lamp supply circuit and the #2 Unit only the loudspeaker unit field supply circuit.

1.5 Speaker System

1.51 Similar to SE-7522 with additional SE-7019 Baffle Section, intended to rest one on top of the other. Refer to E. B. Loudspeaker System.

1.6 Maximum Gain - 131 db. (Refer to Section 14, M-14-A SYSTEMS, Installation Notes)

1.61 If the TA-7466-A Amplifier volume control setting can be reduced three steps when the 118-A Amplifier is switched into the circuit, still maintaining the same volume of sound in the auditorium, the 118-A Amplifier gain control is correctly adjusted, and there will be no danger of the TA-7467-A driving amplifier overloading before full power output of the 118-A Amplifier is reached.

ASSOCIATED DRAWINGS AND BULLETINS

LSS-7526	M-17 System, Connection Diagram
E. B.	SE-7520 Power Unit
RSE-2622	SE-7520 Power Unit, Wiring Diagram & Schematic
SE-7018	SE-7018 Network, " " " "
WE-7500	SE-7512 Switching Panel " " " "
E. B.	TA-7466 Type Amplifier
WE-7539	PA-7001 (TA-7466-A) Amplifier, Schematic
WE-7540	TA-7467-A Amplifier, Wiring Diagram
E. B.	TA-7467 Type Amplifier
WE-7537	TA-7467-A Amplifier, Schematic
WE-7538	" " , Wiring Diagram
E. B.	118-A Amplifier
E. B.	SE-7522 Loudspeaker System
PA-7025	PA-7015 C. C. & 7016 Aux. Controls

1. PA-7015 Preamplifier Cabinet - Locate on the projection room front wall between the projectors so that the PA-7016 Extension Control Rods will clear port holes and other obstructions. Have the cabinet as close as possible to the left projector, and at a convenient height, so that control knobs may be easily reached from its operation position. Cast stop lugs are provided for both control shafts; these go on the rods inside the cabinet with the 5/16" flat washers between lugs and cabinet side wall. Stop studs for the lugs have eccentric bushings; adjust these bushings, and the lug positions on the shafts so that parts inside the changeover switch and volume control are relieved of all stopping strain. After the system is operating, check the action of the detent spring on the changeover switch shaft lug; the relation between the spring and lug should be such as to insure that a positive OFF position is obtained midway between the R (right), and L (left) positions.

1.1 Belden #8401 Coaxial Cable - Length between the output ("core" and "SH") terminals of the SE-7500 Reproducers and the input terminals of the PA-7505-A Amplifier is 12 feet, and the system frequency response curves and correction factors given in the amplifier equipment bulletin are based upon the use of cables of this length. It is an average length which experience indicates will be satisfactory in the majority of installations. Any excess length may be coiled and stored in the bottom of the PA-7015 Cabinet.

1.11 Where it is desired to bring all projector wiring up through pedestal bases, the 12 foot cable length will probably be insufficient in some instances. Longer input cables can be accommodated, however, by suitably modifying the amplifier frequency response to compensate for the increased H. F. loss occasioned by the added cable capacity. In general, satisfactory system frequency response can be obtained in this manner with input cables up to about 25 feet long.

1.12 The cables from both reproducers to preamplifier must obviously be of the same length to prevent differences in frequency response between reproducers. If for some reason they cannot be made physically equal in length, the same electrical effect can be obtained by padding the shorter cable with small condensers on the basis of a cable capacity of 30 micro-micro-farads per foot (for example, a .0001 mf. condenser is equal in effect to a little over 3 feet of cable).

2. Amplifier Rack location should be such as to insure adequate amplifier ventilation, convenient access to monitor volume controls and amplifier switching panel, and good visibility of amplifier plate current meters. Although the amplifiers are well shielded, it is always a wise precaution to have them as far as possible from other projection room power equipment. The rack should be at least 18" from the projection room wall so as to provide easy access to switching panel connections. Conduits may be brought to the top of the rack as shown, using the connection trough provided, or for concealed conduit installations, they may enter the rack from the bottom. The clearance opening at the bottom of the rack is approximately 3" x 18". Conduits bringing 115 V.A.C. to the amplifiers should, if possible be connected directly to the amplifier cabinets in order to separate these power circuits from the sound system circuits. It is desirable to mount the amplifier cabinets near the top of the rack, as shown, so the amplifiers will be at a convenient height for operation and maintenance.

3. SE-7520 Power Unit - Locate in the projection room or in a separate enclosure if local regulations require it. The location must have adequate ventilation to carry off heat developed in the power unit. Where the power unit is located in the projection room it is desirable to have at least a four foot separation between it and the amplifier rack in order to reduce the possibility of inductive interference with amplifier circuits.

4. SE-7501 Monitor Speaker - Suspend by its connection conduit from the projection room ceiling approximately seven feet above the floor slightly to the left of the left projector, and in line with the space between projector mechanism and lamphouse.

4.1 (M-911 Dual only) - The braided shielding of the KS-7133 Cordage extending from the switching panel to the monitor should not be connected to the monitor frame at the monitor end of the run in order to prevent a loop ground circuit through the enclosing conduit. It should be insulated with friction tape at the point where the cordage conductors are spliced to the monitor speaker leads. This is based on the assumption that the connection conduit provides good grounding for the monitor speaker enclosure. If it does not, and if instability at high monitor volume control settings is experienced, a connection between the shielding and the enclosure may prove helpful in some instances. The shielding should be grounded at the switching panel end as called for on the system connection diagram.

4.2 The complete loudspeaker unit (including input transformer) is Part # SE-7002. The transformer has a primary impedance of 5000 ohms, and its separate Part #. is SE-7013. The cone and voice coil alone may be ordered as "SA-2088-14 Cone and Voice Coil Assembly for SE-7002 Loudspeaker Unit."

5. Power Circuits - In addition to the sound system conduit specified in drawing XSS-7535, separately fused 115 volt, 60 cycle, power circuits are required at each projector pedestal for the reproducer driving motor. The A.C. circuits to the amplifiers should be provided with suitable switches, at the panel board or in the line, since the switches on the amplifier chassis are intended for use only during amplifier servicing. Motor circuits should be fused at 15 amperes, or with Fusetrons of the correct rating for 1/6 HP motors. Amplifier and power unit circuits need be fused only for wiring protection (15 amperes), since protective fuses are provided inside the units. All power circuits must be at least #14 BRC except motor feed circuits, which should be not less than #12 BRC.

Issued by
Engineering Department
Printed in U. S. A.

6. Speaker System - Refer to Equipment Bulletin

ASSOCIATED DRAWINGS AND BULLETINS

M-9B System

LSS-7527	M-9B Sound System, Conduit Layout
LSS-7528	M-9B Sound System, Connection Diagram
E. B.	PA-7505-A and MA-7505-A Amplifiers
APA-2637	PA-7505-A Amplifier, Schematic
APA-2638	PA-7505-A Amplifier, Wiring Diagram
LMA-2650	MA-7505-A Amplifier, Schematic
LMA-2649	MA-7505-A Amplifier, Wiring Diagram
LSS-7540	7505-A Type Amplifiers, Equalization Curves
E. B.	SE-7520 Power Unit
RSE-2622	SE-7520 Power Unit, Schematic and Wiring Diagram
E. B.	SE-7508 Loudspeaker System
ASE-7038	SE-7038 Network, Schematic and Wiring Diagram
LPA-7025	PA-7015 C. C. & PA-7016 Aux. Controls

M-911 System
(Substitutions and/or Additions)

LSS-7531	M-911 Sound System, Conduit Layout
LSS-7532	M-911 Sound System, Connection Diagram
E. B.	SE-7511 Loudspeaker System

M-911 Dual System
(Substitutions and/or Additions)

XSS-7535	M-911 Dual Sound System, Conduit Layout and Connection Diagram
WE-7500	SE-7512 (TA-7478) Switching Panel, Schematic and Wiring Diagram
E. B.	SE-7522 Loudspeaker System
ASE-7018	SE-7018 Network, Schematic and Wiring Diagram

Issued by
Engineering Department
Printed in U. S. A.

1. GENERAL

This equipment was designed to reproduce single channel magnetic sound from a four track CinemaScope film or the Magoptical type of print. It consists of two AAA-1 Penthouse Reproducers, a two tube Preamplifier, a Power Supply and a Changeover Device to change from one reproducer to the other.

The preamplifier will develop approximately 2 volts from a magnetic track and when connected to a suitable entrance point of the regular optical amplifier system, magnetic reproduction of the number two track becomes available with a minimum of new equipment. This is not a "mixer" system but uses only the number 2 track as per Twentieth Century-Fox's recommendation. Each pickup head has only one active track. The other three function only to properly support the film at the sound takeoff point.

If in the future it is desired to convert the magnetic reproducers for a 3 or 4 channel stereophonic system, it will be necessary to replace these pickup heads with the type having four active tracks.

Due to the much wider dynamic or volume range recorded on magnetic film it will often be necessary for the operator to reduce the volume during a musical number to prevent overloading of the optical power amplifier. This will be due in most cases to the power limitations of these amplifiers as they were not designed to deliver this amount of power without overload distortion. Most stereophonic power amplifiers have enough reserve power to deliver such peaks without distortion.

2. INSTALLATION AND OPERATION

A normal installation of this equipment places the preamplifier between the two machines and over the number one preamplifier or in the case of a Motiograph System, over the PA-7505A preamplifier.

The power supply cabinet should be located at least six feet from the preamplifier and it is very important that no other transformers or hum producing equipment be mounted near the preamplifier. Due to its high amplification, it is possible that such devices will introduce hum into the system.

Motiograph Drawing RSE-7665 gives the amplifier schematic including the Changeover details. A high frequency equalizing control is provided to compensate for the normal high frequency droop in the overall optical system. Low frequency response is controlled or determined by the .01 mfd condenser in the feedback circuit and its shunt resistor. The amplifier is shipped with a 330,000 ohm resistor across this condenser. Replacing this resistor with a 220,000 ohm resistor will lower the 100 cycle response approximately one db. With no resistor in the circuit the 100 cycle response will be increased approximately two db. It is very important that the low frequency end of the curve is not boosted above the 1000 cycle level in order to get best dialog reproduction and to reduce the possibility of low frequency overload distortion.

The overall system response using the SMPTE frequency reel, as recommended by Twentieth Century-Fox, should be flat from 50 to 8000 cycles with tolerances as shown below.

50 cycles	100	2000	5000	8000
Plus 0	Plus 0	Plus 1	Plus 2	Plus 3
Minus 2	Minus 1	Minus 1	Minus 2	Minus 3

The output of the preamplifier is high impedance and intended to work into high impedance preamplifiers such as the Motiograph PA-7505A. A suitable matching transformer and "magnetic-optical" switch will be required with low impedance preamplifiers. Neither of these items are supplied with the ST-20 Kit. When the PA-7505A preamplifier is used, the installation is simplified as the output of the magnetic preamplifier is connected to the center position of the PA-7505A changeover switch.

The gain control on the magnetic amplifier is adjusted to a point where the magnetic and optical sound requires approximately the same setting of the optical preamplifier gain control which will be used to control the level of both magnetic and optical sound. The same system should be used with other types of equipment. When two optical preamplifiers are used, the magnetic sound will always feed into the same one and its gain control used for controlling the level of the magnetic sound. This may be a slight disadvantage where a separate volume control is provided for each preamplifier.

The changeover switch includes muting contacts which short the preamplifier output during the changeover cycle. Sound changeovers are made by placing a short circuit across the outgoing head and removing a short from the incoming head.

Issued by
Engineering Department
Printed in U. S. A.

When the equipment is ordered for use with a Motiograph system, the SE-7668 power supply is furnished. This unit takes all of its power from the PA-7505A preamplifier, resulting in a simpler installation as no 117 volt line connection is required.

The SE-7669 power supply is furnished for use with other systems and is of conventional design. In all cases, filtered direct current is used on the tube filaments.

The AAA-1 reproducers include balancing potentiometers which are normally adjusted for maximum output. If one reproducer delivers more output than the other, it should be reduced by operating this control in the counter-clockwise direction. No plug-in connection is provided for the pickup head as only three wires are involved and present no soldering or phasing problems.

The AAA-1 reproducer is identical to the standard AAA with the following exceptions:

The RX-11840 pickup head assembly replaces the RX-11830
The RX-11837 terminal panel assembly replaces the RX-11828

ASSOCIATED DRAWINGS

APA-2637	PA-7505A Schematic (5032.09)
RSE-7665	SE-7665 Pre-Amplifier (5034.85)
ASE-7668	SE-7668 Power Supply (5313.21)
ASE-7669	SE-7669 Power Supply (5313.22)
RSS-7606	ST-20 System Schematic (5385.73)
	AAA Magnetic Reproducer (5351.41-.54)

Issued by
Engineering Department
Printed in U. S. A.

RSS-7606

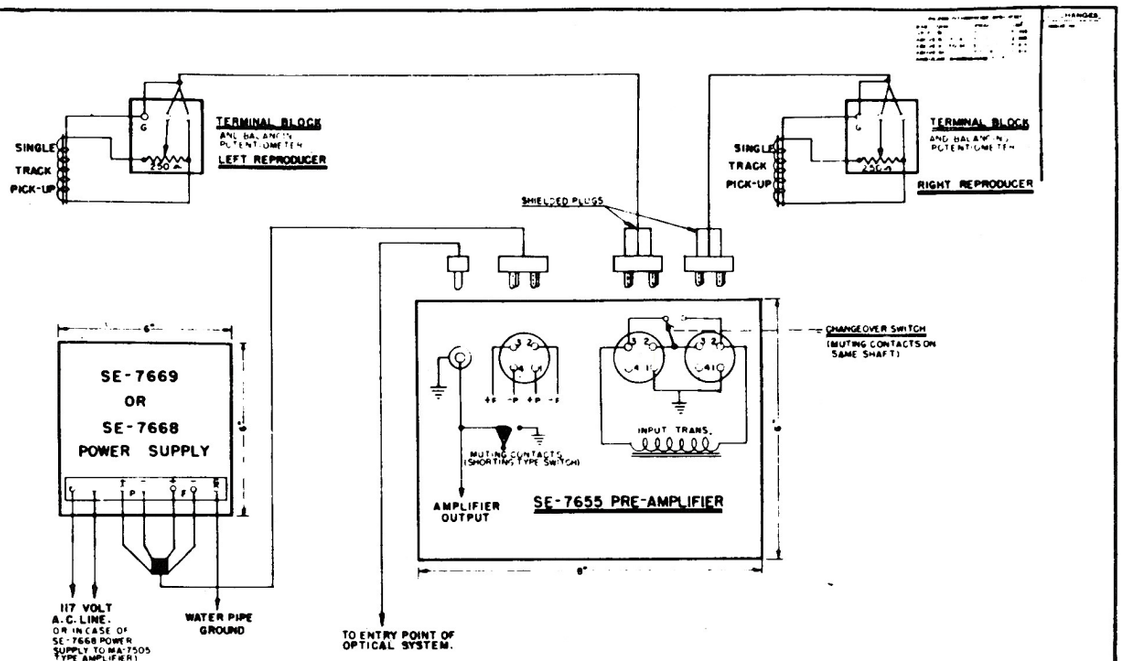

NOTES:

1. ALL PLUG-IN CABLES ARE SUPPLIED
2. MATCHING TRANSFORMER WILL BE REQUIRED FOR SYSTEMS NOT HAVING HIGH IMPEDANCE INPUT.
3. POWER SUPPLY MUST BE LOCATED SIX TO EIGHT FEET FROM AMPLIFIER
4. AMPLIFIER SHOULD BE MOUNTED BETWEEN MACHINES AND OVER THE OPTICAL PRE-AMPLIFIER
5. SHIELDED CABLES TO REPRODUCERS SHOULD BE AS SHORT AS POSSIBLE.

DO NOT SCALE DRAWING

TITLE: SCHEMATIC ST-20 KIT

DRAWN: HUCK | DATE: 11-12-58

DRWG NO. RSS-7606

MOTIOGRAPH INC. CHICAGO U.S.A.

ALTEC SERVICE COMPANY

ST-20 AMPLIFIER SYSTEM

5385.73

Printed in U.S.A.

6/11/56

ALTEC SERVICE CORPORATION

SIMPLEX

EQUIPMENT BULLETIN — INDEX

FILE	EQUIPMENT	ISSUE
	AMPLIFIERS	
40.03	AM-101 Vol. Control (AM-1000 Ampl.)	1
	Addendum #1 (with 2 AM-1000 Ampl.)	1
	WD-100	6
	WD-108	12
	WD-106	2
	AM-101 Ampl. Ground Isolation	1
	AM-1000 Ampl. Insulating Mounting Bracket for SN-541 Potentiometer	1
	AM-2256 Ampl. Modification Kit	1
	AM-2259 Conversion Kit (AM-1000 Ampl. Equipment Instructions)	1
	AM-141 Vol. Cont. (AM-1010 Ampl.)	2
	WD-158	2
	AR-2170 (Mod. for Noise Reduction)	1
	AM-142 (AM-1011)	2
	WD-159	5
	AM-145 Pre-Amplifier Special	1
	WD-160	3
	AM-147 Ampl. Monitor Speaker	
	WD-164	1
	AM-148 Ampl. Special	1
	WD-167	1
	AM-169, AM-169-X (AM-1014) Vol.Cont.	1
	WD-208	1
	WD-209	1
	AM-170 (AM-1015) N.S.	1
	WD-210	1
	WD-211	1
	AM-1001 Power Amplifier	2
	WD-101	6
	WD-113	7
	WD-177 (AM-1001 - Special)	1
	WD-178 (AM-1001 - Special)	1

FILE	EQUIPMENT	ISSUE
	AMPLIFIERS	
40.03	AM-1003 Monitor Amplifier	1
	WD-141	3
	AM-1009 Amp. - Filter	1
	WD-166	3
	AM-1020 Power Amplifier	
	IC-2066	2
	WD-1022	3
	AM-1025 Power Amplifier	1
	4179	2A
	AM-1026 (Blowing of fuses)	1
	WD-1085	2
	WE-1094	3
	AM-1027 20 W.	
	WD-1086	2
	WE-1092	2
	AM-1028 Pre-Amplifier	
	WC-1089	1
	WC-1090	1
	AM-1029 Monitor Amplifier	
	WC-1087	1
	WC-1093	1
	AM-1040 (Simplex AM-1018, A.L. 287-W) Temporary Instruction	1
	NTS-1125 (Mod. Bogen HO-125)	1
	NS-128	3

Issued by
Engineering Department
Printed in U. S. A.

September 30, 1954
Issue #6

ALTEC SERVICE CORPORATION

SIMPLEX

INDEX — EQUIPMENT BULLETIN

FILE	EQUIPMENT	ISSUE
	CABINETS	
40.15	AM-149 and 165 Switch Cab. Special	2
	AM-197 Changeover Cabinet	
	WD-1098	1
	AM-1032 Cabinet Kit	
	GB-1920	3
	AM-1033 Cabinet Kit	
	WC-1099	2
	GC-1921	2
	AM-1035 N.S. Cabinet	
	WC-1101	1
	WD-1102	1
	AM-1038 Cabinet Kit	
	WC-1103	2
	GC-2174	2
	AM-1039 Cabinet Kit	
	WC-1104	2
	GD-2175	1
	LU-3001 Loudspeaker Control Cabinet	2
	WE-1023	9
	NTS-69 Monitor Vol. Control Cabinet	
	NS-122	1
	NTS-70 Monitor Vol. Ampl.Selector Cab.	
	NS-123	1
	NTS-76 Vol. Cont. Ampl. Selector Cab.	
	NS-124	1
	NTS-78 Ampl. Selector Cabinet	
	NS-125	1

FILE	EQUIPMENT	ISSUE
	CABINETS	
40.15	NTS-81 Ramp Control Cabinet	
	NS-159	1
	CABLE	
40.16	SH-2100 Coaxial Cable Assembly	1
	SH-2103 Coaxial Cable	2
	8401 Belden Microphone Cable	1
	TEST FILM	
40.20	AP-17-1 Test Film	1
	NETWORKS	
40.21	Networks, General	1
	WD-116 - LU-1002	5
	WD-117 - LU-1003	3
	WD-200 - LU-1003-X	3
	WD-124 - LU-1026	1
	LU-1047 Network	2
	LU-1084 Network, Equipt. Instr.	1
	WD-1012	6
	HORNS	
40.22	H. F. Horns	1
	SPEAKERS	
40.22	LU-1018 Monitor Unit	1
	LU-1024 Monitor Loudspeaker	1
	LU-1039 Wings - Dwg. WD-135	2
	LU-1040 Wings - WD-133	2
	LU-1041 Wings - WD-130	4
	LU-1042 Wings - WD-134	3
	LU-1103 Speaker Network - Dwg. WC-1095	3
	WD-1096	2
	In-A-Car Speakers	1
	In Car Speaker - Vol. Controls	1
	Speaker Equipment - XL - Parts List	1
	Cry Room Attachment (Speaker)	1

ALTEC SERVICE CORPORATION

SIMPLEX

EQUIPMENT BULLETIN — INDEX

FILE	EQUIPMENT	ISSUE
	PANELS	
40.27	LU-3017 Ramp Switching Panel	
	AS-2189	1
	IB-2224	1
	LU-3018 Ramp Switching Panel	
	AS-2190	2
	IB-2225	1
	POWER UNITS	
40.31	PU-1000 Power Unit	1
	Addendum #1 - Type "E" System	1
	WD-123	3
	PU-1001 Power Unit (Special)	2
	WD-182	1
	PU-1003 Power Unit	2
	WD-140	1
	PU-1005 Power Unit	1
	PU-1009, PU-1010 Power Unit	
	WC-1088	2
	WD-1091	3
	REPRODUCER SETS	
40.35	SH-1000 - SH-1001	1
	AP-2044 - Pressure Measurements	1
	SH-1007 - SH-1008 Sound Heads	
	WC-1097	3
	SH-1012 - SH-1013 Sound Heads	
	WC-1100	3
	Lubrication Chart	2
	Addendum #1	1
	SH-106 Push-Pull Kit	1
	Addendum #1	1
	SH-2066 Coupling Unit	1
	SH-2066	1
	Take-Ups	1

FILE	EQUIPMENT	ISSUE
	REPRODUCER SETS	
40.35	Modernization, Replacement of	
	W.E. Sound Heads	1
	WD-161	1
40.384	ATTACHMENTS	
	AM-2069 N.S. - Ann. Switching	
	Attachment	1
	Addendum #1	1
40.385	SYSTEMS	
	Equipment List for X-L Systems	1
	Equipment List for Standard Systems	1
	Systems - Magnetic/Stereophonic	1
	System Operation	1
	Tuning Up	1
	Emergency Operation - A-15	1
	A-30	1
	B-30	1
	B-60	1
	C-60	1
	Drive-In Theatre Systems	1
	XL Single Film Magnetic, Series XL-101	1
	XL Single Film Magnetic, Series XL-200	1
	XL-432 & XL-436 Single Film	1
	Addendum #1	1
	MODIFICATION PARTS - NOISE REDUCTION	
40.386	Pickup Elimination Parts -	
	AM-2168, AM-2169, AM-2170, AM-2171	2
	AM-2173 - Pickup Elimination "E" Sys.	1
	AM-2174, AM-2175 and AM-2176	1

Issued by
Engineering Department
Printed in U. S. A.

September 30, 1954
Issue #6

FILE	EQUIPMENT	ISSUE
	SWITCHES	
40.41	Changeover - Sound, Exciter Lamp WD-109	1
	Changeover - Composite Schematic of AM-1000 Vol. Cont. Ampls. and Changeover Switches - AR-1125	1
	Changeover Switch, AP-1992	1
	AM-2013 Switch	1
	WD-111	8
	AM-2047 Switch	
	WD-129	2
	AM-2049 Switch	1
	WD-110	3
	AM-2053 Switch	
	WD-122	1
	AM-2102 Switch (Special)	1
	WD-169	1
	AM-2122 Switch (Special)	1
	WD-170	2
	AM-2197 Switch	1
	WC-1021	2
	LU-1022-1044-1063 L.S. Testing	1
	WD-131	1
	WD-143	1
	WD-168	1
	SN-1087 Switch	1

FILE	EQUIPMENT	ISSUE
	TESTING PROCEDURES	
40.64	Freq. Resp. Char. - AM-1001 Ampl. SC-21	
	Freq. Resp. Char. with AM-141 Vol. Cont. Ampl. amd AM-142 Ampl. Equipment SC-43	2
	Freq. Resp. Char. with AM-145 Pre-Ampl. Equipment SC-46	1
	Voltage - Current Test Data: Impedances; Transformer and Reactor Resistances	2

Attached herewith is a set of schematic and wiring diagrams of the components of the new Simplex X-L Sound Systems, as well as an equipment list and a chart showing the speaker combinations for these systems. The material included is as follows:

FILE	DRAWING		
40.15	GB-1920	AM-1032 Cabinet Kit	Wiring
	WC-1099	AM-1033 Cabinet Kit	Schematic
	GC-1921	"	Wiring
	WC-1103	AM-1038 Cabinet Kit	Schematic
	GC-2174	"	Wiring
	WC-1104	AM-1039 Cabinet Kit	Schematic
	GD-2175	"	Wiring
40.03	WD-1085	AM-1026 Amplifier	Schematic
	WE-1094	"	Wiring
	WD-1086	AM-1027 Amplifier	Schematic
	WE-1092	"	Wiring
	WC-1087	AM-1029 Monitor Amplifier	Schematic
	WC-1093	"	Wiring
40.31	WC-1088	PU-1009, PU-1010 Power Unit	Schematic
	WD-1091	"	Wiring
40.03	WC-1089	AM-1028 Pre-Amplifier	Schematic
	WC-1090	"	Wiring
40.22	WC-1095	LU-1103 Network	Schematic
	WD-1096	"	Wiring
40.35	WC-1097	SH-1007, SH-1008 Sound Heads	Schematic and Wiring
	WC-1100	SH-1012, SH-1013 Sound Heads	Schematic and Wiring
40.15	WC-1101	AM-1035 N.S. Cabinet	Schematic
	WD-1102	"	Wiring
40.27	AS-2189	LU-3017 Ramp Switching Panel	Wiring
	AS-2190	LU-3018 Ramp Switching Panel	Wiring
40.15	WC-1098	AM-197 Changeover Cabinet	Schematic and Wiring

These bulletins should be separated and filed in your Simplex bulletin binder under the file number as shown in the upper right hand corner of the bulletin.

Issued by
Engineering Department
Printed in U. S. A.

1. DESCRIPTION

The AM-101 Unit is a wall mounted cabinet 12-1/2" high x 9" wide x 6-1/2" deep, weighing 9 lbs. It normally contains one AM-1000 Volume Control Amplifier, a sound and exciter lamp changeover switch and a pilot lamp. (See Addendum #1 for AM-101 equipped with two AM-1000 Amplifiers.) The cabinet is surface mounted for exposed conduit installation, and may be partially recessed in the wall when conduit is concealed.

A. Characteristics - AM-1000 type Amplifier.
Type - Chassis type - two stage, resistance coupled, inverse feedback.
Gain - Maximum 46 db.
Input Impedance - 250,000 ohms (where dual AM-1000 Amps. installed, impedance is 150,000 ohms).
Output Impedance- 10,000 ohms.
Gain Control - Potentiometer - 20 steps, 2 db each.
P.E.C. Control - R_3 adjustable resistor with range of 6 db, in cathode of first tube for equalization of P. E. C. output.
Vacuum Tubes - One 1620 in first stage and one 6J7 in second stage.
Power Supply - Plate and filament supply obtained from AM-1001 Amplifier and voltage divider in AM-1000 provides P. E. C. polarizing potential.
Accessories - AM-2019 Terminal Strip on external cable, which provides for external connections and also includes "On", "Off" switch for cutting out amplifier.
Associated Dwgs.- WD-100 Schematic
WD-108 Wiring
WD-109 and AR-1125 Changeover Switch Schematic

B. Changeover is made at either machine by operating the changeover switch on the front of either cabinet, sound and exciter lamp being transferred at the same time. An electronic type of sound changeover incorporating a three-way circuit is employed. In the "ON" amplifier the second tube has normal bias, whereas in the "OFF" amplifier the bias of this tube is increased beyond cut-off and the amplifier is inoperative. There is no switching in the sound circuit, and the changeover is instantaneous and noiseless. The exciter lamp changeover provides for preheating of the standby lamp on AC. The pilot lamp indicates the machine in use.

2. INSTALLATION

The AM-101 Amplifier Unit should be mounted as shown in system conduit layouts. Since a fixed length of SH-2100 Coaxial Cable is shipped with the system for coupling between the PEC output and AM-101 input, this amplifier should be so located that the coaxial cable can be properly installed and connected. The connections to the terminal strips should be made per the system wiring diagram.

NOTE: All wires connected to terminals in the cabinet should run below the terminal strips AND NOT ABOVE, to avoid possible interference between these wires and the AM-1000 chassis.

The microphone cable, connected to the output terminal, should be securely fastened, by means of cord through tie cord holes in the terminal strip, in such a manner that there is no strain on the conductor.

A. Equalization of PEC Outputs. The resistor R_3 should be adjusted so that the output of all volume control amplifiers is the same, with the same setting of the main volume control. This resistor should be adjusted after all adjustments have been made in the sound mechanism, and when carefully made will accurately equalize outputs.

B. Volume Control. In establishing normal operating level initially for a specific auditorium, set the volume control on step 9, run a standard recording, such as the Academy Test Reel, and adjust the gain control in the power amplifier as required to obtain adequate volume level in the auditorium.

3. OPERATION

Set the switch on the terminal strip of the amplifier in "ON" position and the changeover switch so that the projector being threaded is inoperative (pilot lamp is out). Changeover is then made, when the in-coming machine is up to speed, by operating the changeover switch on either cabinet.

4. MAINTENANCE

A. Vacuum Tubes. The prongs should make good contact and should be clean and bright.

B. Capacitors. Check all clamping rings and nuts periodically, and tighten if necessary.

C. Pilot Lamp. If the pilot lamp does not light check the fuse mounted on the terminal strip mounting bracket, as removal of the exciter lamp while the power unit is in operation may cause the fuse to blow. Otherwise the pilot lamp should be replaced by removing the socket from the inside of the cabinet. A flickering pilot lamp indicates a defective tungar bulb in the exciter lamp power unit.

1. INSTALLATION

When 2 AM-1000 Amplifiers are installed in the AM-101 Volume Control Cabinet, proceed as follows:

A. Modifications. IN THE SECOND AMPLIFIER in each cabinet disconnect R_1 from C_1, and tape the lead. This change should not be made in the first amplifier in the cabinet. The second amplifier is the one which projects out beyond the cover as shown in Fig. 1 and is shown as Amplifier #2. (See Dwg. WD-108 regarding other circuit changes which may be necessary.)

B. The Installation Procedure for the second amplifier (modified per A above) is as follows: (See Figure 1 below.)

(1) Install fibre washer (required to avoid grounding) and AM-2029 Coupling on potentiometer shaft of first amplifier.
(2) On second amplifier remove potentiometer from bracket. Do not disconnect wires. Reverse mounting bracket to provide space for the AM-2029 Coupling, and remount potentiometer.
(3) Attach second amplifier to first, using four #8-32 x 3/8 R.H.I.M.S., Nuts and lockwashers supplied.
(4) Line up second potentiometer with first. A slotted hole is provided in the bracket for this purpose. Tighten coupling set screw and the potentiometer locknut.
(5) Mount the second amplifier terminal strip below the first (See Figure 2) using two #8-32 x 3/8 R.H.I.M.S., nuts and lockwashers supplied.
(6) Form the second amplifier cable toward the cabinet cover so that it clears the terminal strip when the cover is closed. Adjust the cable clamp as required.
(7) Like terminals on the two AM-1000 should be strapped together per Figure 2. The input should be strapped by connecting a wire between the lower terminals of C_1 in each amplifier (See Figure 1).
(8) The two potentiometers are coupled together mechanically, so that the knob on the front of the cabinet controls the volume, irrespective of the AM-1000 in use.
(9) A terminal strip on an external cable form is provided for external connections. An "ON", "OFF" switch is provided on each terminal strip to disconnect an inoperative amplifier.

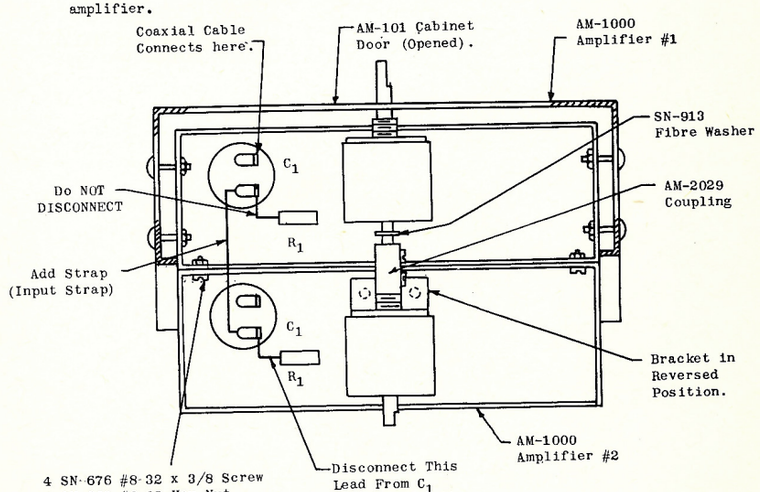

FIGURE 1

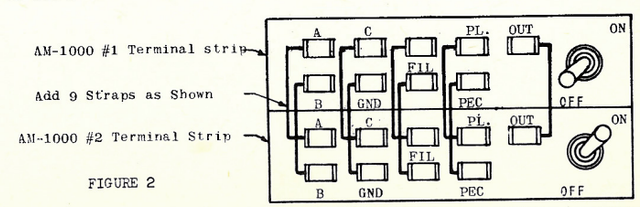

FIGURE 2

C. Equalization of PEC Outputs. Resistor R_3 in each AM-1000 should be adjusted so that the output of all volume control amplifiers is the same, with the same setting of the main volume control. This resistor should be adjusted after all adjustments have been made in the sound mechanism, and when carefully made will accurately equalize outputs.

2. OPERATION

A. Normal. Set the switch on the terminal strip of Amplifier #1 in "OFF" position, and the similar switch on Amplifier #2 in "ON" position. The second amplifier, which is slightly more accessible for tube replacements and servicing, is then the regular, and the first the standby amplifier. Set the changeover switch so that the projector being threaded is inoperative (pilot lamp is out) and make the changeover, when the in-coming machine is up to speed, by depressing the switch button on either cabinet.

B. Emergency. If the regular amplifier becomes inoperative in either cabinet:

(1) Set the volume control in that cabinet on step 1. This is important to prevent disturbances in the sound circuit when the switches are operated as described below.
(2) Set the switch on the regular amplifier in that cabinet in "OFF" position.
(3) Set the switch on the standby amplifier in that cabinet in "ON" position.
(4) Return the volume control to normal setting, and the system may be operated in the regular way.

3. ORDERING. A second amplifier for one cabinet should be ordered as:

1 AM-108 Amplifier Equipment consisting of:

1 AM-1000 Volume Control Amplifier
1 SN-707 Vacuum Tube (6J7)
1 SN-792 Vacuum Tube (#1620)

1 AM-2016 Mounting Parts, consisting of:
1 AM-2029 Coupling
1 SN-913 Fibre Washer
6 SN-676 Screw (8-32 x 3/8 R.H.I.)
8 SN-683 Nut (8-32)
8 SN-685 Lockwasher (#1108)
4 SN-169 Standard Washers

ALTEC SERVICE CORPORATION
SIMPLEX

AM-1000 AMPLIFIER

WD-100

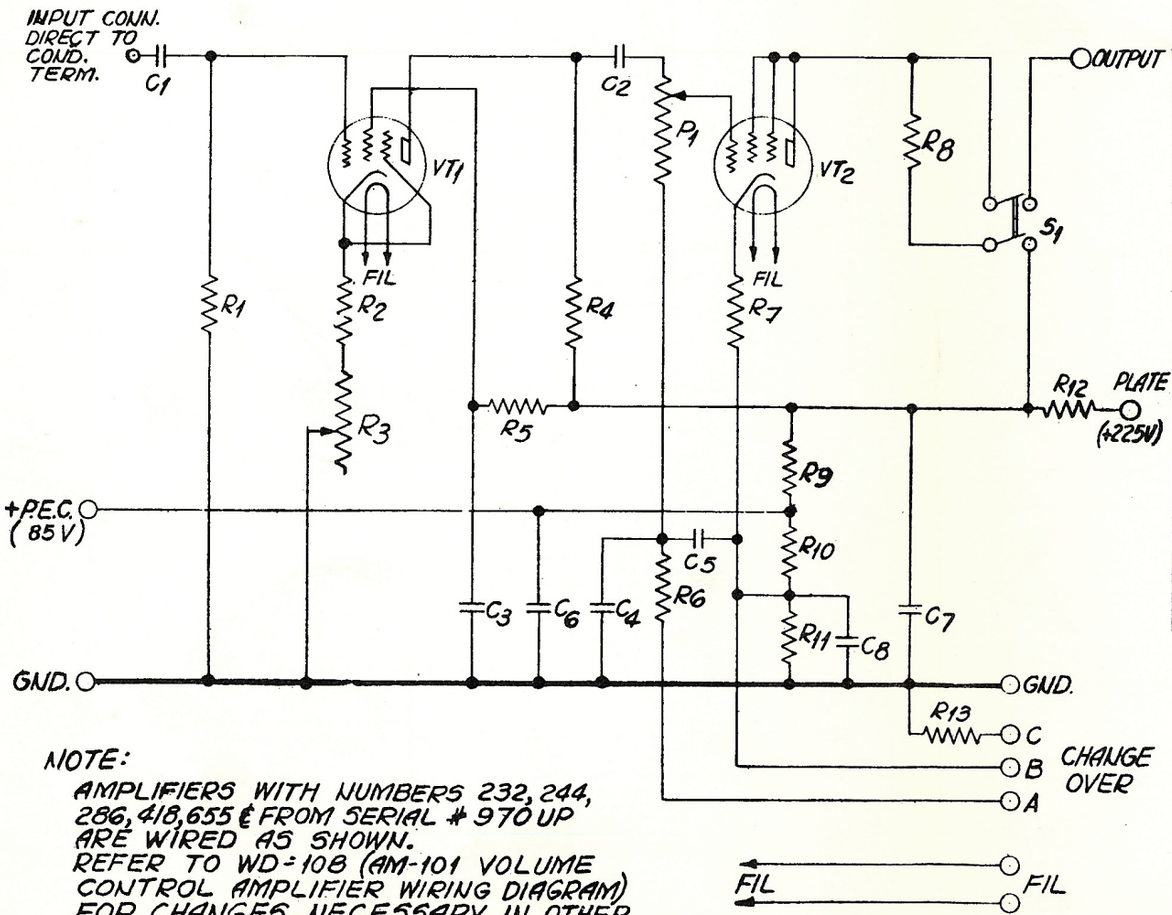

NOTE:
AMPLIFIERS WITH NUMBERS 232, 244, 286, 418, 655 & FROM SERIAL # 970 UP ARE WIRED AS SHOWN.
REFER TO WD-108 (AM-101 VOLUME CONTROL AMPLIFIER WIRING DIAGRAM) FOR CHANGES NECESSARY IN OTHER AMPLIFIERS, WHEN IMPROVED OPERATION IS DESIRED.

DESIG.	PART No.	APPARATUS
C1,C2,C3	SN-514	.05 MF-400 V CAP. AEROVOX TYPE 2EM
C4	"503	10 MF-50 V " " " EM
C5	"505	10 MF-" " " " 2EM WITH PAPER TUBE
C6,C7 C8	"506	8-8-10 MF AEROVOX TYPE 3E ~~8-8-10~~ 150-250-30
R1	"539	510,000Ω-1 WATT RES. I.R.C. TYPE BT-1
R2	"1129	4700Ω-1 WATT " " " WW
R3	1887	5,000Ω WIRE WOUND POT.
R4	"538	220,000Ω 1 WATT RES I.R.C. TYPE BT-1
R5	"517	2 MEG - " " " " BT-1
R6,R7	"530	6,200Ω - " " " " "
R8	"540	24,000Ω - " " " " "
R9	"522	68,000Ω-1 WATT " " " BT-1
R10	"523	56,000Ω- " " " " "
R11	"689	15,000Ω- " " " " "
R12	"527	24,000Ω- " " " " "
R13	"688	51,000Ω ½ WATT " " " BT-½
P1	"1889	500,000Ω 20-2 DB STEPS POT.
VT1	"792	6J7 METAL VT (6J7-B31 OR "1620)
VT2	"707	6J7 METAL VACUUM TUBE
S1	"608	D.P.S.T. SWITCH

ISSUE:-1 3-24-38
S1 WAS BETWEEN R12 & "PLATE" TERM. R4 & R5 WERE TO OTHER SIDE OF SWITCH. NOTE ADDED. R9 & R10 WERE 75,000Ω & 45,000Ω RESPECT.
DR. E.G.M. APP'D CFA
ISSUE:2 10-28-38
R9 & R10 WERE SHOWN AS SN-521 & 579 RESPECT.
DR. E.G.M. APP'D CFA
ISSUE:3 12-2-38
SN-1129 WAS SN-531 SN-538 WAS BT-½
DR APP'D CFA
ISSUE:4 6-5-40
R3 WAS "SN-532 5000Ω 10 WATT RBS I.R.C. TYPE AB-A," P1 - SN-1889 WAS SN-541, SN-517 WAS SN-537
DR. [illegible] E.G.M.
ISSUE:5 9-16-48
SN-539 WAS 500,000 Ω
SN-1129 WAS 5,000 Ω
SN-538 WAS 200,000 Ω
SN-530 WAS 6,000 Ω
SN-540 WAS 25,000 Ω
SN-522 WAS 70,000 Ω
SN-523 WAS 55,000 Ω
SN-527 WAS 25,000 Ω
SN-688 WAS 50,000 Ω
ARM OF R-3 WAS CONNECTED TO R-2 & REMAINED CONNECTION FROM R-3 TO GROUND
DR. [illegible] E.G.M.
ISSUE:6 - 7-20-49

ASSOCIATED ITEMS
AM-1000 AMPLIFIER
VOLUME CONTROL
SCHEMATIC

INTERNATIONAL PROJECTOR CORPORATION
90 GOLD STREET NEW YORK

DR. EGM CHK'D APP'D

WD-100

40.03
AM-101 AMPLIFIER

WD-108

ALTEC SERVICE CORPORATION
SIMPLEX

ISSUE
REDRAWN WITHOUT CHANGE
ISSUE 12 1-11-50

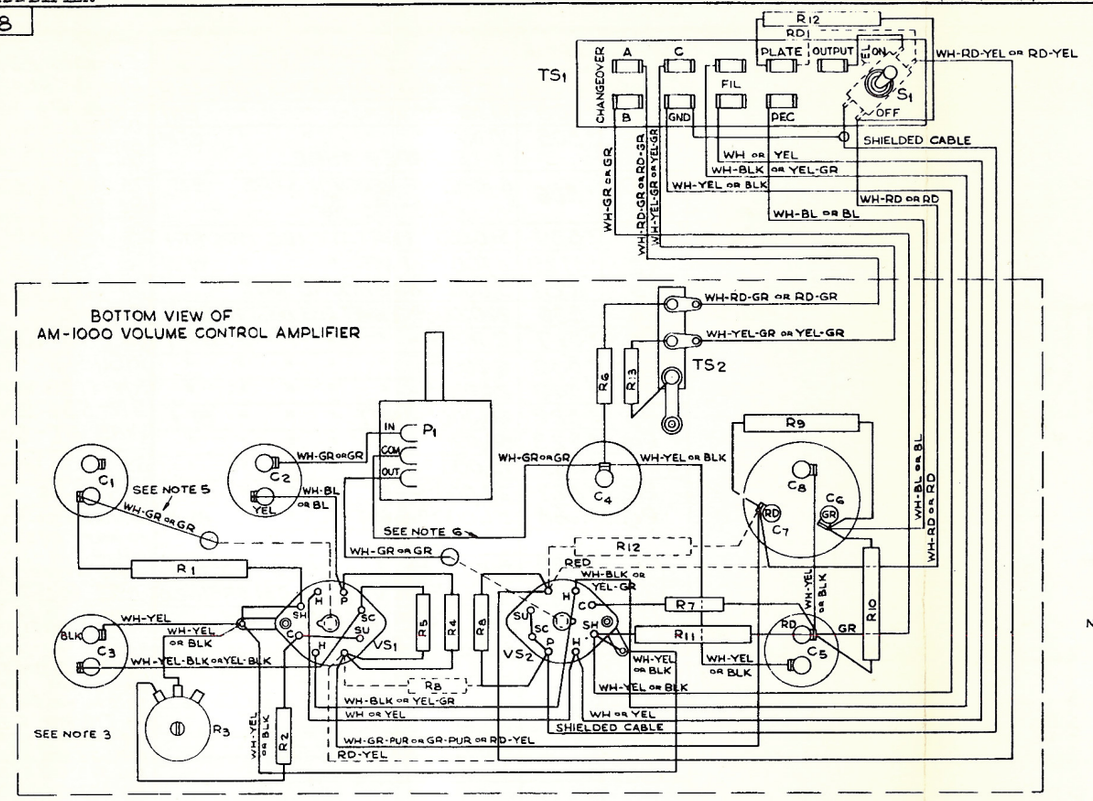

AM-1000 VOLUME CONTROL AMPLIFIER

DESIG.	PART NO	APPARATUS
C_1, C_2, C_3	SN-514	.05 MF-400 V CAPACITOR
C_4	" 503	10 MF- 50 V "
C_5	" 505	10 MF- " " WITH PAPER TUBE
C_6, C_7, C_8	" 506	8-8-10 MF CAPACITOR C_6 8, C_7 8, C_8 10
R_1	" 539	500,000Ω 1 WATT RES. I.R.C. TYPE BT-1
R_2	"1129	5,000Ω - 1 WATT " " " W-W
R_3	"1887	5,000Ω - WIRE WOUND " POT
R_4	" 538	200,000Ω 1 WATT RES. I.R.C. TYPE BT-1
R_5	" 517	2 MEG. - " " " " "
R_6, R_7	" 530	6,000Ω " " " " "
R_8	" 540	25,000Ω " " " " "
R_9	" 522	70,000Ω " " " " "
R_{10}	" 523	55,000Ω " " " " "
R_{11}	" 689	15,000Ω " " " " "
R_{12}	" 527	25,000Ω " " " " "
R_{13}	" 688	50,000Ω - ½ WATT " " " BT-½
P_1	"1889	500,000Ω 19-2 DB STEPS POT
TS_1	AM-2019	TERMINAL STRIP
TS_2	SN-611	TERMINAL STRIP
S_1	" 608	D.P.S.T. SWITCH (PART OF AM-2019 TERM STP)
VS_1, VS_2	" 561	SOCKET

AM-2034 CABINET

S_2	AM-2245	SWITCH
TS_3	AM-2018	TERMINAL STRIP
F_1	SN-881	FUSE - (½ AMP)
FM_1	" 737	FUSE MOUNTING
SKT_1	" 563	LAMP SOCKET
* LP_1	" 894	LAMP (9 VOLT - .2 AMP.)

* INDICATES NON-COMPONENT ITEM WHICH MUST BE ORDERED SEPARATELY

AM-2034 CABINET

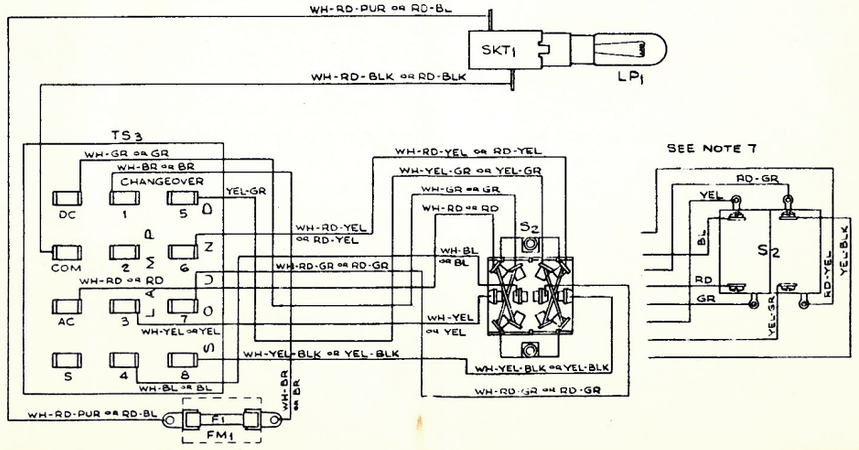

NOTES:—

1- AMPLIFIERS WITH NUMBERS 232, 244, 286, 418, 655 & FROM 970 UP ARE WIRED AS SHOWN.

2- WHEN AMPLIFIERS BELOW SERIAL NO. 541 ARE INSTALLED AS DUAL VOLUME CONTROL AMPLIFIERS, THE WIRING OF EACH SHOULD BE CHANGED, REMOVALS INDICATED BY DOTTED (– – –) LINES, AS FOLLOWS:—

A. SERIAL # 317 TO # 540
(1) DISCONNECT R_8 & RD-YEL WIRE (TO TS_1) FROM VS_1 & RECONNECT TO VS_2.
(2) RUN NEW GR-PUR WIRE FROM C_7 (RD. TERM) TO VS_1 (TERM. FROM WHICH R_8 WAS DISCONNECTED).

B. SERIAL NUMBERS BELOW # 317
(1) REMOVE R_{12} & RECONNECT ON TS_1 AS SHOWN.
(2) REMOVE RED WIRE FROM VS_2 & RECONNECT TO C_7 (RD. TERM.).
(3) DISCONNECT R_8 FROM VS_1 & RECONNECT TO VS_2.
(4) RUN NEW RD-YEL WIRE FROM VS_2 TO S_1.
(5) ON TS_1 REMOVE RED STRAP BETWEEN "PLATE" & S_1.

THE NEW RD-YEL WIRE MAY BE RUN INSIDE THE COTTON SLEEVING COVERING THE CABLE FORM OR ON THE OUTSIDE. TO RUN INSIDE, REMOVE THE WHIPPING AT EACH END, ADD THE WIRE & REWHIP. IF THE WIRE IS RUN OUTSIDE, IT SHOULD BE TIED AT INTERVALS & SO LOCATED THAT IT WILL NOT CHAFE.

3- ADJUST POTENTIOMETER R_3 (RANGE 6 DB) SO THAT OUTPUT OF EACH VOLUME CONTROL AMPLIFIER IS THE SAME WITH THE SAME SETTING OF THE VOLUME CONTROL (P_1). TO INCREASE THE GAIN, TURN CLOCKWISE.

4- VACUUM TUBES REQUIRED.
VS_1 - SN-792 VACUUM TUBE (6J7, 8-31 STOCK). SPECIALLY SELECTED TUBE DISTINGUISHED BY AN "X" ON THE BOTTOM OF THE TUBE.
VS_2 - SN-707 VACUUM TUBE (STANDARD 6J7). SOME TUBES MAY BE MARKED WITH AN "M" ON THE BOTTOM.

5- MADE UP AS SUB-ASS'BLY AM-2231 (6½" LONG).

6- MADE UP AS SUB-ASS'BLY AM-2232 (8½" LONG).

7- WIRING DIAGRAM OF AM-2065 (REPLACED BY AM-2245).

SCALE

AM-101
VOL. CONTROL AMPLIFIER
WIRING DIAGRAM
INTERNATIONAL PROJECTOR CORPORATION
85 LA FRANCE AVENUE
BLOOMFIELD NEW JERSEY
DR SAJR CHK APP'D

PRODUCT CLASS

WD-108

Printed in U.S.A.

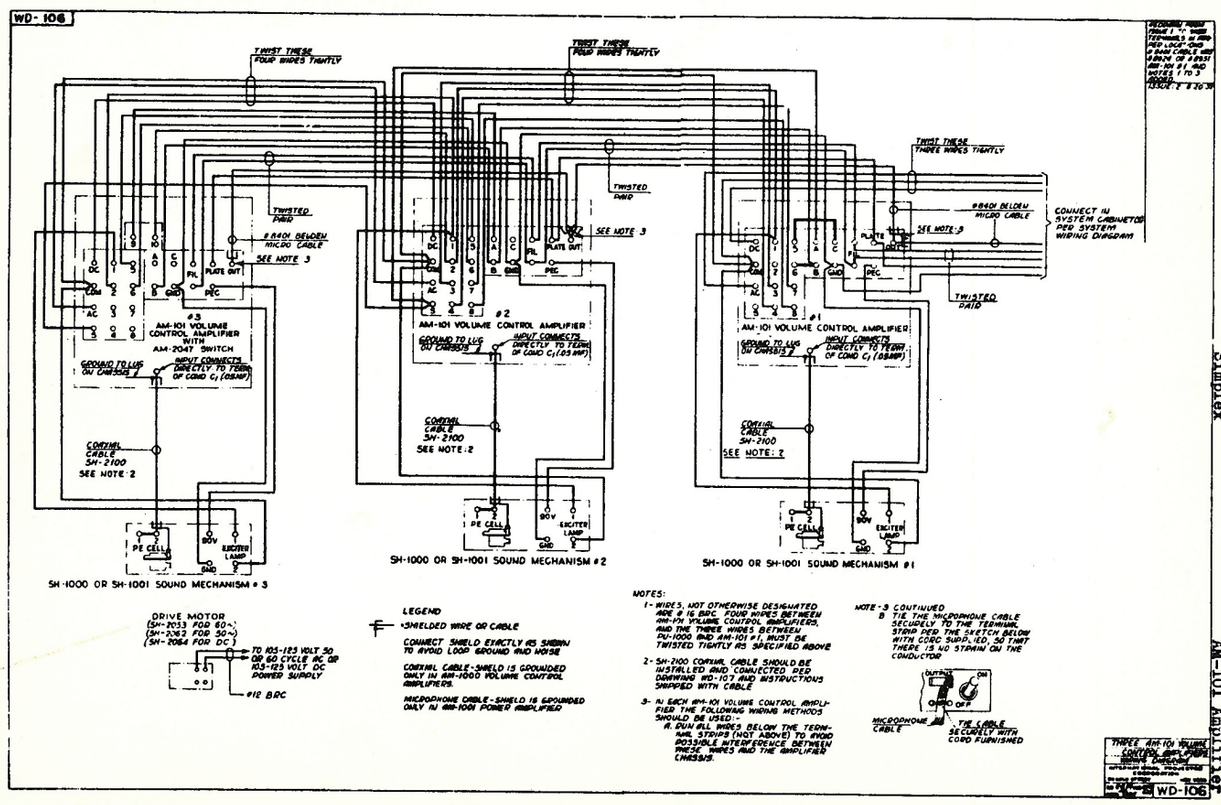
WD-106
TWIST THESE FOUR WIRES TIGHTLY
TWISTED PAIR
#8401 BELDEN MICRO CABLE
SEE NOTE 3
#3
AM-101 VOLUME CONTROL AMPLIFIER WITH AM-2047 SWITCH
GROUND TO LUG ON CHASSIS
INPUT CONNECTS DIRECTLY TO TERM OF COND C1 (.05 MF)
CONTROL CABLE SH-2100
SEE NOTE 2
PE CELL
EXCITER LAMP
SH-1000 OR SH-1001 SOUND MECHANISM #3
#2
AM-101 VOLUME CONTROL AMPLIFIER
SH-1000 OR SH-1001 SOUND MECHANISM #2
#1
AM-101 VOLUME CONTROL AMPLIFIER
SH-1000 OR SH-1001 SOUND MECHANISM #1
TWIST THESE THREE WIRES TIGHTLY
CONNECT TO SYSTEM CABINETS PER SYSTEM WIRING DIAGRAM
DRIVE MOTOR
(SH-2033 FOR 60~)
(SH-2062 FOR 50~)
(SH-2084 FOR DC)
TO 105-125 VOLT 50 OR 60 CYCLE AC OR 105-125 VOLT DC POWER SUPPLY
#12 B.&C.
LEGEND
SHIELDED WIRE OR CABLE
CONNECT SHIELD EXACTLY AS SHOWN TO AVOID LOOP GROUND AND NOISE
COAXIAL CABLE - SHIELD IS GROUNDED ONLY IN SH-1000 VOLUME CONTROL AMPLIFIERS.
MICROPHONE CABLE - SHIELD IS GROUNDED ONLY IN SH-1001 POWER AMPLIFIER
NOTES:
1 - WIRES, NOT OTHERWISE DESIGNATED ARE # 16 B&C. FOUR WIRES BETWEEN AM-VM VOLUME CONTROL AMPLIFIERS, AND THE THREE WIRES BETWEEN PU-1000 AND AM-101 #1, MUST BE TWISTED TIGHTLY AS SPECIFIED ABOVE
2 - SH-2100 COAXIAL CABLE SHOULD BE INSTALLED AND CONNECTED PER DRAWING WD-107 AND INSTRUCTIONS SHIPPED WITH CABLE
3 - IN EACH AM-101 VOLUME CONTROL AMPLIFIER THE FOLLOWING WIRING METHODS SHOULD BE USED:-
A. RUN ALL WIRES BELOW THE TERMINAL STRIPS (NOT ABOVE) TO AVOID POSSIBLE INTERFERENCE BETWEEN THESE WIRES AND THE AMPLIFIER CHASSIS.
NOTE-3 CONTINUED
B. TIE THE MICROPHONE CABLE SECURELY TO THE TERMINAL STRIP PER THE SKETCH BELOW WITH CORC SUPP. NO. 30 THAT THERE IS NO STRAIN ON THE CONDUCTOR
OUTPUT ON
COND OFF
MICROPHONE CABLE
TIE CABLE SECURELY WITH CORD FURNISHED
THREE AM-101 VOLUME CONTROL AMPLIFIER SOUND SYSTEM WIRING DIAGRAM
WD-106

WD-106

1. HUM REDUCTION - Due to the fact that the associated sound system is also grounded to the front wall conduit through the chassis of the AM-1000 Amplifiers, hums may be experienced if the house wiring is defective due to this ground loop. This hum may appear to be of an intermittent nature, depending on whether or not, the lights on the defective circuit are turned on or off.

2. MODIFICATION

2.1 The above condition may be eliminated by electrically insulating the AM-1000 Amplifiers from the AM-101 Cabinet.

2.2 Material required for each AM-101 Amplifier.

4 - Extruded insulating washers

Outside diam. of washer	3/8"
Diam. of boss	.246"
Thickness of boss	1/16"
Diam. of hole	11/64"

2 - Sheets insulating fish paper, approx. 2-1/2" x 4"

3. PROCEDURE

3.1 Remove AM-1000 Amplifier from the AM-101 Cabinet.

3.2 Enlarge the four mounting holes of the AM-1000 Amplifier to 1/4" to accommodate the boss of the insulating washers.

3.3 Insert the fish paper between the amplifier chassis and cabinet. Using the same screws and insulating washers, remount the amplifier.

3.4 It may be necessary to file the end of the 1/2" fitting on the greenfield containing the coaxial cable. Sometimes the end of this fitting will extend far enough beyond the cabinet to touch the amplifier chassis, thus causing a ground.

3.5 When the cabinet is closed, the chassis may touch the flange on the cabinet. Using a hacksaw and a pair of pliers, remove enough of this flange to safely clear the amplifier chassis.

3.6 Remove the safety stud from the door of the SH-1000 Sound Units. When or if, this stud touches the guide roller assembly, the amplifier chassis will effectively be grounded.

3.7 Remove the ground wire from the respective AM-1000 Amplifiers and using ohmmeter check to see if chassis is free from ground. If free from ground, restore ground wires and test for sound.

4. It is desirable that the above modification be made on all new installations and on all existing installations where trouble may be suspected.

ALTEC SERVICE CORPORATION
SIMPLEX
SOUND EQUIPMENT BULLETIN

AM-1000 AMPLIFIER
INSULATING MOUNTING BRACKET
FOR SN-541 POTENTIOMETER

1. NOISE REDUCTION

1.1 Several cases of noises and "plops" in the AM-1000 Amplifier have been traced to the SN-541 Potentiometers. Further investigation of this trouble indicated that the shafts of these potentiometers were intermittently grounded to the mounting bracket.

2. MODIFICATION

2.1 The AM-2260 Mounting Bracket which consists of the standard bracket with an insulated mounting hole has been made available as a means of eliminating this grounded condition.

3. PROCEDURE

3.1 To install, merely remove SN-541 Potentiometer from present SN-543 Bracket without removing any wires and remount on the AM-2260 Bracket.

4. AVAILABILITY

4.1 This insulated mounting bracket is available on request and should be installed in those locations where noises and plops traced to the SN-541 Potentiometer are adversely affecting reproduction. These brackets are being furnished to Altec on a No Charge basis by International Projector Corporation and will be installed where needed on a similar basis.

5. MERCHANDISING

5.1 For each AM-1000 Amplifier involved, order:

1 - AM-2260 Mounting Bracket

Issued by
Engineering Department
Printed in U.S.A.

January 14, 1949
Issue #1

A. DESCRIPTION

1. Use. In AM-101 and AM-101-X Volume Control Amplifiers to eliminate changeover "thumps" and "clicks".

2. List of Parts (per Volume Control Amplifier):

1	AM-2048 Terminal Strip
2	SN-612 Resistor, 10,000 ohms
1	SN-689 Resistor, 15,000 ohms
4	SN-1881 Resistor, 240,000 ohms
1	SN-1882 Capacitor, 50 mf
12"	EW-631 Sleeving
12"	EW-920 Wire

B. INSTALLATION

The procedure for each AM-1000 Amplifier in each AM-101 or AM-101-X Volume Control Amplifier is as follows. (See Drawing WD-108).

NOTE: The AM-101-X Amplifier is the same as the AM-101 Amplifier except that it is equipped with two AM-1000 Amplifiers.

1. Remove R-6.
2. In AM-101-X only, remove R-11.
3. Remove R-13.
4. Install an SN-612 Resistor (10,000 ohms) in place of R-6.
5. Connect an SN-1881 Resistor (240,000 ohms) from C-4 to ground on TS-2.
6. Connect an SN-1881 Resistor (240,000) from C-4 to C-8.
7. In AM-101 only, connect an SN-1882 Capacitor (50 mf) from C-8 to ground on TS-2.
8. In AM-101-X only, mount the AM-2048 Terminal Strip in accordance with Figure 1.
9. In AM-101-X only, connect an SN-1882 Capacitor (50 mf) and an SN-689 Resistor (15,000 ohms) in parallel to terminals 9 and 10 of AM-2048 and wire per Figure 2.

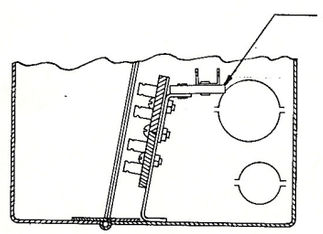

FIGURE 1

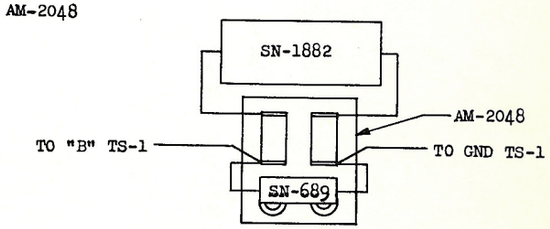

FIGURE 2

C. OPERATION

The AM-101 and AM-101-X Volume Control Amplifiers operate in the same manner as described in the Equipment Instruction for these units.

D. AVAILABILITY

This modification kit is available on request and should be installed in those locations where such changeover thumps and clicks are adversely affecting reproduction. These kits are being furnished to Altec on a no charge basis by International Projector Corporation and will be installed where needed on a similar basis.

E. MERCHANDISING

For each AM-101 or AM-101-X Amplifier order:

1 - AM-2256 Amplifier Modification Kit

Issued by
Engineering Department
Printed in U. S. A.

December 28, 1948
Issue #1

ALTEC SERVICE CORPORATION
SIMPLEX
SOUND EQUIPMENT BULLETIN

AM-2259 CONVERSION KIT
AM-1000 AMPLIFIER
EQUIPMENT INSTRUCTIONS

---

1. DESCRIPTION

A. Use. In AM-1000 Volume Control Amplifiers to replace the SN-532 Resistor, and provide a more satisfactory method of adjusting the gain of the amplifier for machine balancing.

B. LIST OF PARTS (Per Amplifier)

1 AM-2258 Volume Control Potentiometer Assembly, consisting of:-

1 SN-669 Nut	R&R	Complete Kit Net only
1 SN-1061 Washer	R&R	Complete Kit Net only
1 SN-1887 Potentiometer ←or	R&R	Complete Kit Net only
1 SN-1888 Bracket	Net	Complete Kit Net only
1 SN-1890 Jam Nut	Net	Complete Kit Net only

1 SN-675 Screw
1 SN-686 Lockwasher

2. INSTALLATION

The installation procedure recommended for each AM-1000 is as follows:

A. Remove the WH-YEL or BLK wire and disconnect the SN-1129 Resistor (R-2) from the SN-532 Resistor (R-3).

B. Unsolder the other terminal of R-3 from the ground lug and remove R-3. Retain the SN-683 Nut.

C. Mount the AM-2258 Potentiometer Assembly on the chassis by means of the SN-675 Screw, SN-683 Nut and SN-686 Lockwasher. Use the SN-532 mounting hole in the chassis. The assembly should be positioned so that the slot in the potentiometer shaft is accessible for adjustment.

D. Connect the WH-YEL or BLK wire, removed under "A" above, to the center terminal of the potentiometer and connect R-2 to the left terminal of the potentiometer.

3. OPERATION

Adjust the potentiometer as required to equalize machines, turning in a clockwise position to increase the gain. Tighten the SN-1890 Jam Nut when the adjustment is completed.

4. ASSOCIATED DRAWING. WD-108 AM-101 Volume Control Amplifier, Wiring Diagram.
WD-100 AM-101 Volume Control Amplifier, Schematic.

Issued by
Engineering Department
Printed in U.A.A.

October 14, 1949
Issue #1

1. DESCRIPTION.

The AM-141 Volume Control Amplifier consists of an AM-1010 Volume Control Amplifier, the main system volume control, and a special input jack enclosed in a wall mounting metal cabinet 10" high x 8" wide x 4" deep, with a cover hinged at the left. Total weight 8 lbs.

A. Characteristics - AM-1010 Amplifier

Type	-	Chassis Type two stage resistance, coupled.
Gain	-	Max 49 db
Impedance Input	-	166,000 ohms
Impedance Output	-	5,000 ohms
Gain Control	-	Potentiometer (40 db) - not in equal steps.
P.E.C. Control	-	Potentiometer on terminal strip for varying P.E.C. potential.
Vacuum Tubes	-	One 1620 in first stage and one 6J7 in second stage.
Power Supply	-	Plate and filament supply obtained from AM-1011 (Power Amp.)
Accessories	-	Input jack on chassis provided for special inputs of high impedance. When jack is in use the sound mechanisms are inoperative.
Associated Dwg.	-	WD-158 Schematic and wiring.

2. INSTALLATION.

The AM-141 should be mounted approximately 3" below the observation port between the two machines, as shown on the system conduit layout. For convenience in installation the AM-1010 and the terminal strip may be removed as a unit by loosening the two chassis mounting screws and removing the two terminal strip mounting screws.

External connections to the terminal strip should be made per the system wiring diagram and the Equipment Bulletin "SH-2103 Coaxial Cable". These external wires should run below the terminal strip, and not above, to avoid interference with the AM-1010 Amplifier cable form.

A. Equalization of PEC Outputs. The potentiometer on the terminal strip should be adjusted with a screw driver so that the output of both sound mechanisms is the same. This potentiometer should be adjusted after all adjustments have been made in the sound mechanisms, and when carefully made will accurately equalize the outputs.

B. The Main Volume Control should be adjusted, as required, to compensate for variations in prints, size of audience, etc.

3. OPERATION.

A. Film Reproduction. The AM-1010 is ready for operation when the main system power supply switch is set in "ON" position. Set the changeover switch (See Equipment Bulletin "SW-1087 Switch") so that the projector being threaded is inoperative (exciter Lamp dim). Set the volume control as required by the specific installation conditions, and when the incoming machine is up to speed make the changeover by operating the changeover switch. The volume control, when turned to the extreme counter-clockwise position, "cuts off" all sound from the stage speakers.

B. Special Input. Insert the special input plug in the jack on the left side of the cabinet and adjust the volume as required. The special input plug must be removed for film reproduction - otherwise both sound mechanisms are inoperative.

C. Where desirable and necessary the high end response may be shelved down 8 db (refer to E.B. LU-1047 Network, F.40.21) by transferring H.F. lead to 18 ohm section of network and parallel 15 ohm section with 15 ohm 10 watt resistor.

D. If hum level is high it may be decreased by modifying circuit in accordance with sketch ohm on WD-158.

4. MAINTENANCE.

A. Vacuum Tubes. Tubes should be tested monthly by substituting a new tube. Tube prongs should make good contact, and should be clean and bright. Careful bending of the socket contacts may be resorted to, if necessary, to provide good contact and the prongs may be burnished with crocus cloth, if necessary.

B. Capacitors. Check all clamping rings and nuts periodically and tighten if necessary.

CONCEALED CONDUIT INSTALLATIONS.

When the conduits from the AM-141 to the sound mechanism are concealed, Belden #8401 Microphone Cable and two #16 BRC wires should be substituted for the coaxial cable supplied with the equipment.

Printed in U. S. A.
Issue #1
September 15, 1941

WD-158

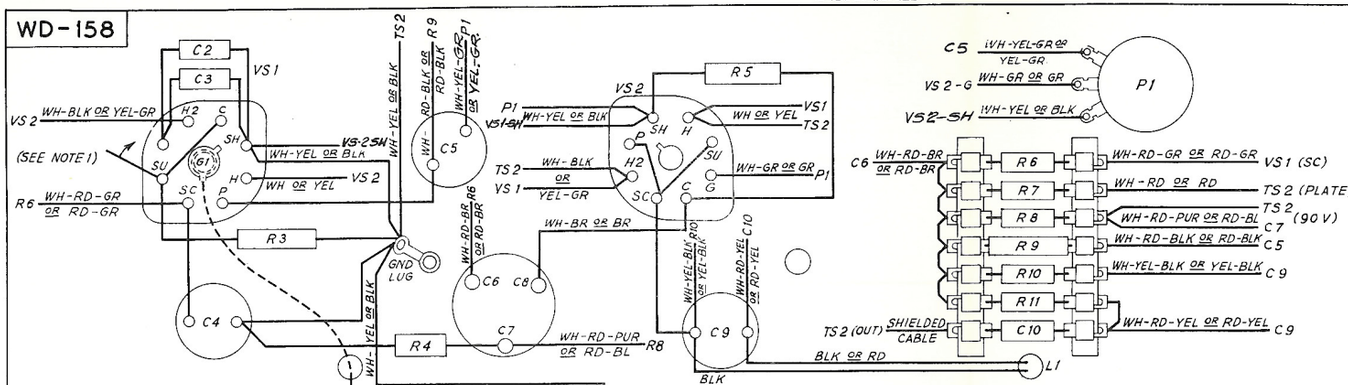

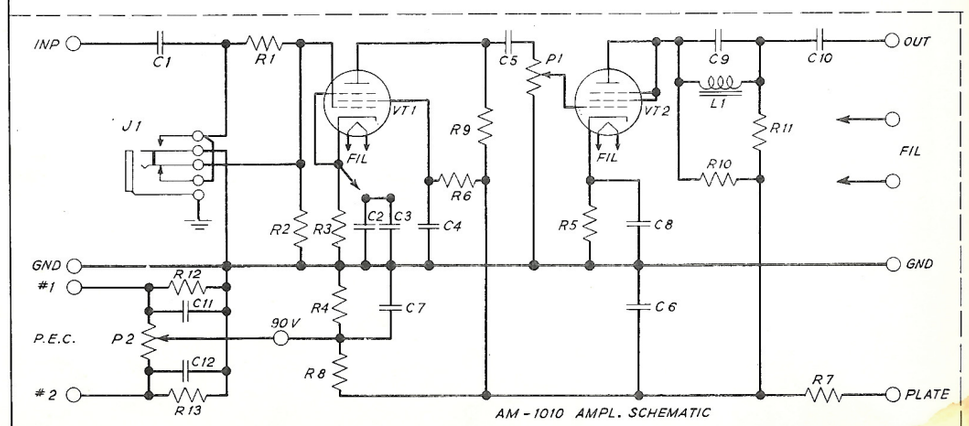

AM-1010 AMPLIFIER		
DESIG.	PART NO.	APPARATUS
C1,2,3,C10	SN-788	CAPACITOR, .01 MF, 500 V
C4, C5	SN-514	CAPACITOR, .05 MF, 400 V
C6	SN-506	CAPACITOR, 8 MF, 250 V
C7		CAPACITOR, 8 MF, 150 V
C8		CAPACITOR, 10 MF, 50 V
C9	SN-1082	CAPACITOR, .25 MF, 200 V
R1,2, R9	SN-539	RESISTOR, 510,000 Ω, 1 WATT
R3	SN-1129	RESISTOR, 4700 Ω, 1 WATT, WIRE WOUND
R4	SN-1071	RESISTOR, 100,000 Ω, 1/2 WATT
R5	SN-1130	RESISTOR, 2000 Ω, 1 WATT, WIRE WOUND
R6	SN-537	RESISTOR, 2.2 MEG, 1/2 WATT
R7	SN-540	RESISTOR, 24,000 Ω, 1/2 WATT
R8	SN-688	RESISTOR, 51,000 Ω, 1/2 WATT
R10,11	SN-612	RESISTOR, 10,000 Ω, 1/2 WATT
L1	SN-1045	REACTOR, 7 HENRIES
J1	SN-1077	JACK
P1	SN-1074	POTENTIOMETER, 500,000 Ω, 1/2 WATT
TS1	SN-611	TERMINAL STRIP
VS1,2	SN-561	SOCKET, OCTAL
VT1 *	SN-792	VACUUM TUBE (TYPE #1620)
VT2 *	SN-1066	VACUUM TUBE (TYPE 6SJ7)
AM-2074 TERMINAL STRIP (TS2)		
C11	SN-1086	.1 MF, 200 V
C12		.1 MF, 200 V
R12,13	SN-539	RESISTOR, 510,000 Ω, 1 WATT
P2	SN-1085	POTENTIOMETER, 200,000 Ω, 1/2 WATT

*INDICATES NON-COMPONENT ITEM WHICH MUST BE ORDERED SEPARATELY.

NOTE 1: HIGH FREQUENCY EQUALIZATION

REDRAWN WITH EXTENSIVE CHANGES

ISSUE: 4

R-3 WAS 5100 Ω

ISSUE: 5

WIRE FROM P-1 TO VS 2-5, WAS WH-YEL OR BLK WIRE FROM P-1 TO C-5 WAS WH-YEL-GR OR YEL-GR, AS PER DEV. PERMIT NO 15

ISSUE: 6

WH-YEL OR BLK WIRE SHOWN ON C-5 WAS WH-YEL-GR OR YEL-GR. ADDED WH-YEL-GR OR YEL-GR TO P-1 WIRE ON VS-2

ISSUE: 7

C5 WIRE SHOWN ON P1 WAS VS2-G & VS2-SH WIRE ON P1 WAS C5. ON VS2-SH WH-YEL-GR OR YEL-GR WAS REMOVED FROM WIRE TO P1. ON C5, WH-YEL-GR OR YEL-GR WIRE WAS WH-YEL OR BLK.

ISSUE: 8

AM-141 VOL. CONT. AMPLIFIER
WIRING DIAGRAM & SCHEMATIC

INTERNATIONAL PROJECTOR CORPORATION
55 LA FRANCE AVENUE
BLOOMFIELD NEW JERSEY

DR. CH'K. APP'D.

WD-158

REDRAW FROM WD-158 SIMPLEX. TO SHOW MOD. FOR NOISE REDUCTION.	APP'D.
158.1 9-30-49	W.H.S.

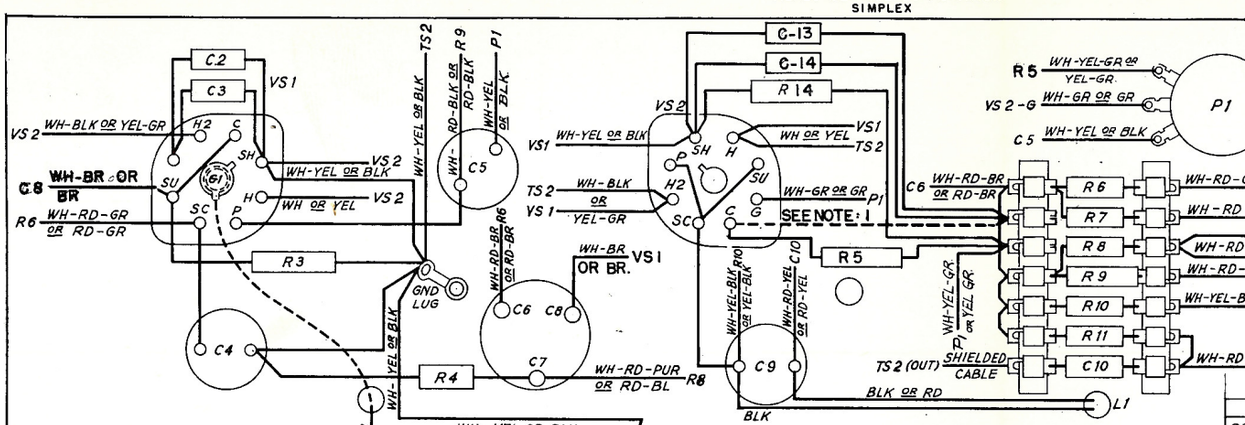

AM-1010 AMPL. (BOTTOM VIEW)

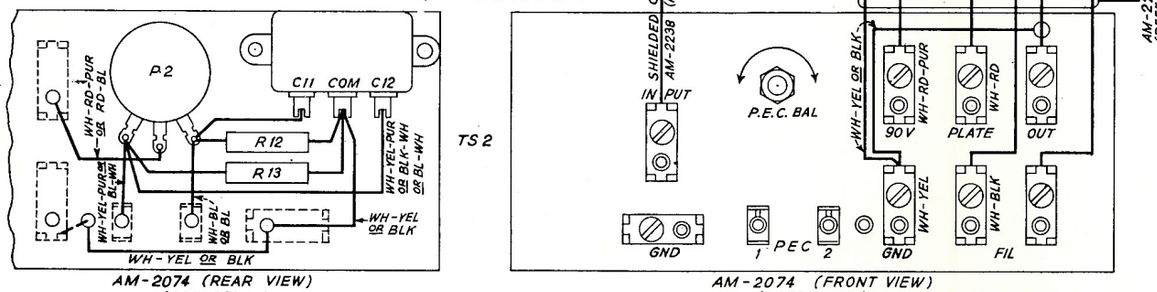

AM-2074 (REAR VIEW)
(REFERENCE)

AM-2074 (FRONT VIEW)
(REFERENCE)

AM-1010 AMPLIFIER		
DESIG.	PART NO.	APPARATUS
R 14	SN-769	RESISTOR, 3000Ω / WATT. W.W.
C 13, C 14	SN-788	CAPACITOR, .01 MF, 500 V.
C1,2,3,C10	SN-788	CAPACITOR, .01 MF, 500 V
C4, C5	SN-514	CAPACITOR, .05 MF, 400 V
C6	SN-506	CAPACITOR, 8 MF, 250 V
C 7		CAPACITOR, 8 MF, 150 V
C 8		CAPACITOR, 10 MF, 50 V
C 9	SN-1082	CAPACITOR, .25 MF, 200 V
R1, 2, R9	SN-539	RESISTOR, 510,000Ω, 1 WATT
R3	SN-1129	RESISTOR, 4700Ω, 1 WATT, WIRE WOUND
R 4	SN-1071	RESISTOR, 100,000Ω, 1/2 WATT
R 5	SN-1130	RESISTOR, 2000Ω, 1 WATT, WIRE WOUND
R 6	SN-537	RESISTOR, 2.2 MEG, 1/2 WATT
R 7	SN-540	RESISTOR, 24,000Ω, 1/2 WATT
R 8	SN-688	RESISTOR, 51,000Ω, 1/2 WATT
R 10, 11	SN-612	RESISTOR, 10,000Ω, 1/2 WATT
L 1	SN-1045	REACTOR, 7 HENRIES
L 2	SN-1500	REACTOR
P 1	SN-1074	POTENTIOMETER, 500,000Ω, 1/2 WATT
TS 1	SN-611	TERMINAL STRIP
VS 1, 2	SN-561	SOCKET, OCTAL
VT 1 *	SN-792	VACUUM TUBE (TYPE #1620)
VT 2 *	SN-1066	VACUUM TUBE (TYPE 6SJ7)
J 1	SN-1077	JACK
AM-2074 TERMINAL STRIP (TS 2)		
C 11	SN-1086	.1MF, 200 V
C 12		.1MF, 200 V
R12, 13	SN-539	RESISTOR, 510,000Ω, 1 WATT
P 2	SN-1085	POTENTIOMETER, 200,000Ω, 1/2 WATT

*INDICATES NON-COMPONENT ITEM WHICH MUST BE ORDERED SEPARATELY.

NOTE 1: HIGH FREQUENCY EQUALIZATION

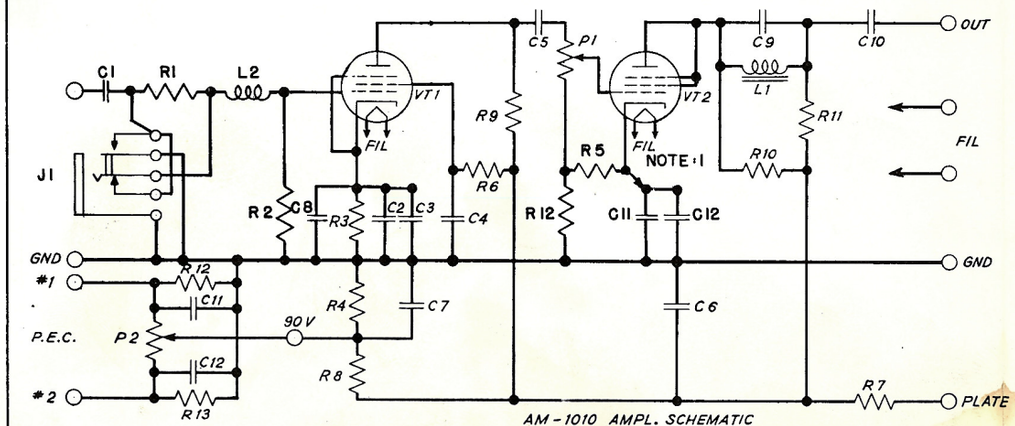

AM-1010 AMPL. SCHEMATIC

DRAWN BY [illegible] DATE 9-30-49
APP'D WHS. DATE 9-30-49

AM-141 VOL. CONT. AMPLIFIER MODIFIED FOR NOISE REDUCTION WIRING DIAGRAM & SCHEMATIC

ALTEC SERVICE CORPORATION N.Y.C.

AR-217.0

1. DESCRIPTION - The AM-142 consists of an AM-1011 Amplifier, an LU-1046 Monitor Speaker and a monitor volume control in a wall mounted, hinged cover, metal cabinet 14-1/2"H x 18"W x 11-1/2"D. Weight 65lbs.

1.1 The AM-1011 is an AC operated chassis type, two stage plus phase inverter, negative feedback, push-pull output power amplifier. An adjustable warping circuit is provided in the feedback loop to vary the high and low frequency response as may be required. A single stage transformer coupled monitor amplifier is also included on the same chassis.

1.2 The LU-1046 is an 8" dia. x 4" D cone type PM Speaker. Voice coil impedance 4 ohms. Weight 3 lbs.

2. CHARACTERISTICS (AM-1011)

Gain	.48 DB (Monitor Ampl. 20 DB)
Impedance	.Input (source) 5000 ohms (Monitor Ampl. 50 ohms) Output (load) Refer to Section 3.2. Transformer taps 12 & 24 ohms. (Monitor Ampl. 4 ohms).
Power Output	10 Watts, 32.2 DB; 40 DBM (Monitor Ampl. 2.5 Watts, 26.2 DB; 34 DBM)
Frequency Response	Refer to SC-43
Noise Level.	-35 DB; -27.2 DBM Note: To reduce monitor hum connect a CD-UP9BJ39-40/40 mf - 450V Condenser (both sections in parallel) in parallel with C-13.
Vacuum Tubes	2 - 6SJ7, 2 - 6L6, 1 - 5Z3 , 1 - 6F6
Power Supply Required . .	105-125 V AC, 50-60 cycles, 115 Watts
Power Supply Furnished . .	Heater and plate supply for AM-141 Vol. Contr. Ampl.
Dimensions	7-1/2"H x 17"W x 10"D
Weight	.35 lbs.

3. INSTALLATION INSTRUCTIONS

3.1 Power Transformer Connections.

Average Line Voltage	Connect to T_2 Tap
120 - 130	125 V (Connection as shipped)
110 - 120	115 V
100 - 110	105 V

3.2 Output Transformer Connections - For optimum power output with a nominal 12 ohm speaker load, the "output" and "feedback" wires should be connected to the "24 ohm" output transformer terminal. Amplifier output impedance on this tap is approximately 1.25 ohms.
Note: Output Transformer has terminals marked "24 ohms" and "12 ohms". Simplex Equipment Instructions advise that the "24 ohm" terminal is the 12 ohm load terminal and the "12 ohm" terminal is the 6 ohm load terminal.

3.3 Warping circuit adjustment - Adjust response curve, as required, in accordance with instructions on Dwg. SC-43.

ASSOCIATED DRAWINGS

WD-159 Schematic and Wiring Diagram
SC-43 Freq. Response Characteristics

Issued by
Engineering Department
Printed in U. S. A.

June 19, 1948
Issue #2

WD-159

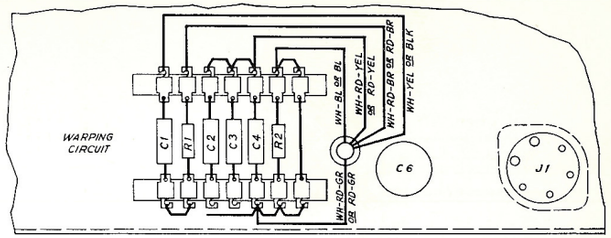

PARTIAL VIEW - TOP CHASSIS

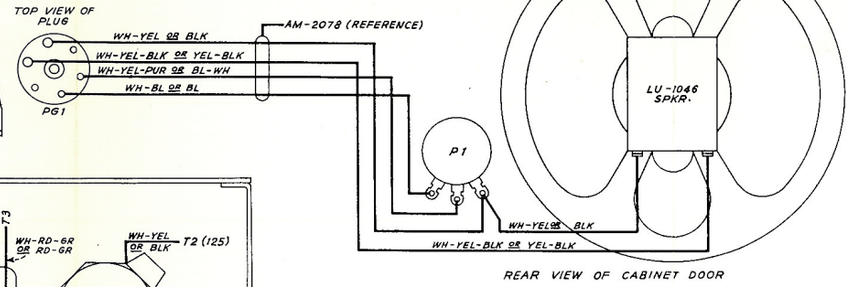

REAR VIEW OF CABINET DOOR

NOTES:
1. AMPLIFIERS FROM SERIAL #171 UP, RESISTOR R7 IS SN-539 (500,000Ω) INSTEAD OF SN-526 (30,000Ω)
2. AMPLIFIERS FROM SERIAL #264 UP ARE WIRED AS SHOWN. BELOW SERIAL #264, AC COLOR CODE WAS REVERSED. COLOR OF WIRING TO FUSE AND TRANSFORMER CHANGED TO AGREE.

REDRAWN FROM ISSUE: 4 WITH EXTENSIVE CHANGES

ISSUE: 5 6-11-48

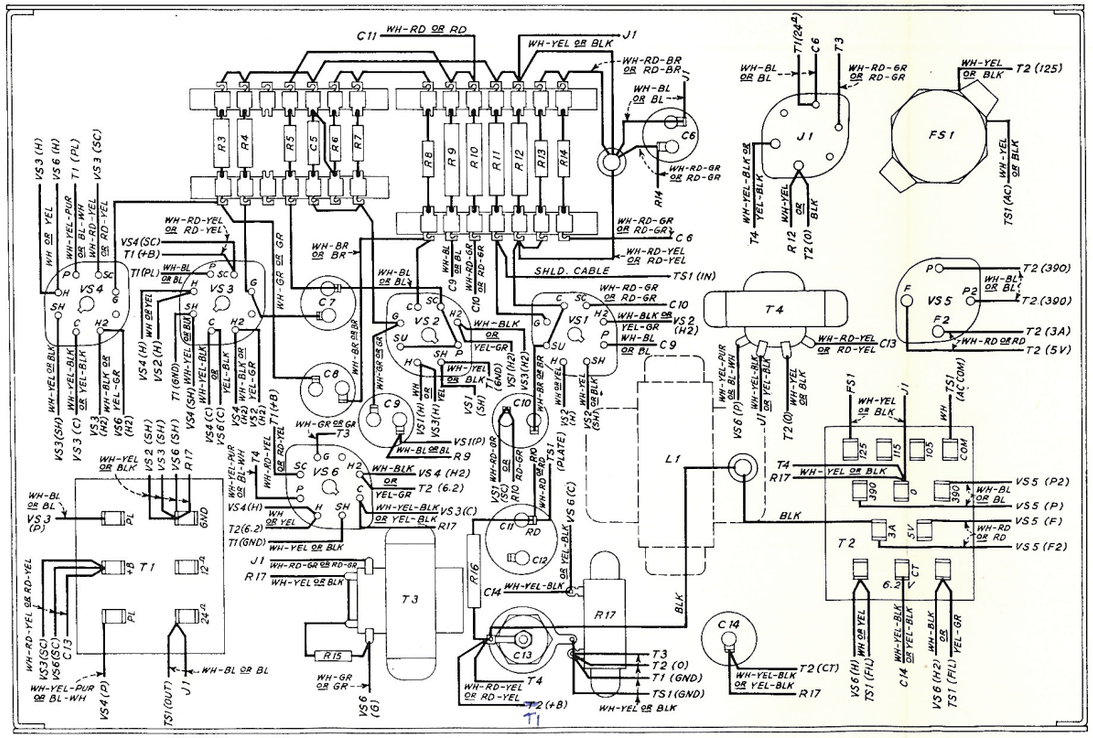

BOTTOM VIEW OF CHASSIS

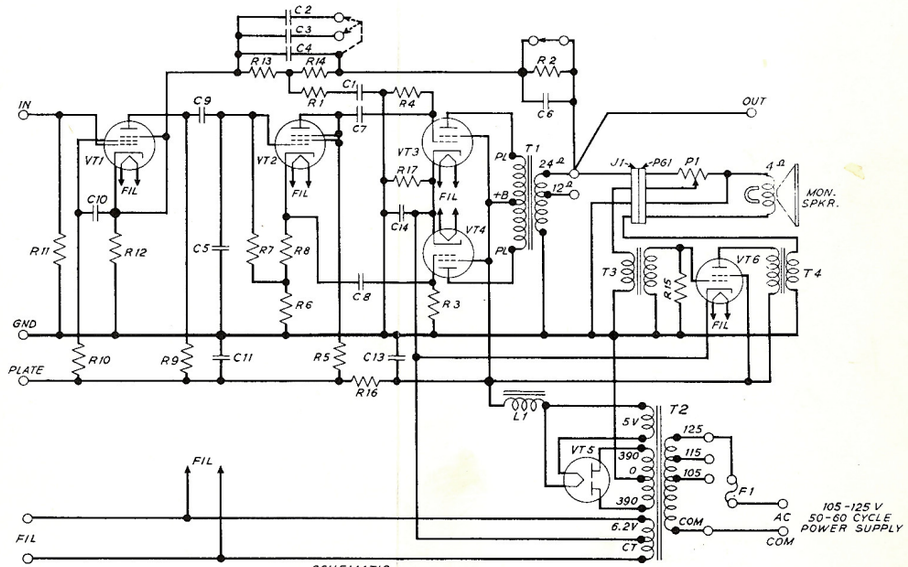

SCHEMATIC

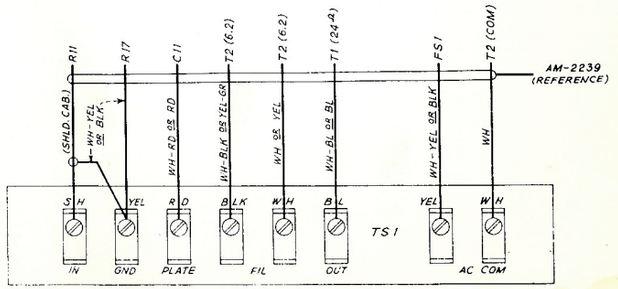

DESIG.	PART NO.	APPARATUS
C1	SN-515	CAPACITOR, .005 MF, 500 V
C2	SN-582	CAPACITOR, .001 MF, 500 V
C3	SN-581	CAPACITOR, .00075 MF, 500 V
C4	SN-512	CAPACITOR, .0005 MF, 500 V
C5	SN-516	CAPACITOR, .0003 MF, 500 V
C6,7,8,9,10	SN-514	CAPACITOR, .05 MF, 400 V
C11, C12	SN-507	CAPACITOR, C11-$\frac{.20}{.240}$, C12-$\frac{.4}{.240}$
C13	SN-1553	CAPACITOR, 12 MF, 600 V
C14	SN-502	CAPACITOR, 25 MF, 50 V
R1	SN-772	RESISTOR, 510Ω, 1/2 WATT
R2	SN-1071	RESISTOR, 100,000Ω, 1/2 WATT
R3,R4,R9	SN-580	RESISTOR, 270,000Ω, 1 WATT
R5	SN-526	RESISTOR, 30,000Ω, 1/2 WATT
R6, R15	SN-540	RESISTOR, 24,000Ω, 1/2 WATT
R8	SN-531	RESISTOR, 5,000Ω, 1/2 WATT
R10	SN-517	RESISTOR, 2 MEG. 1 WATT

DESIG.	PART NO.	APPARATUS
R7, R11	SN-539	RESISTOR, 510,000Ω, 1 WATT
R12	SN-1130	RESISTOR, 2,000Ω, 1 WATT, WIRE WOUND
R13, R14	SN-528	RESISTOR, 7,500Ω, 1/2 WATT
R16	SN-1111	RESISTOR, 15,000Ω, 2 WATT
R17	SN-535	RESISTOR, 240Ω, 7.5 WATT, WIRE WOUND
TS1	AM-2072	TERMINAL STRIP ASSEMBLY
J1	SN-564	SOCKET, 6 PRONG
P1	SN-1120	POTENTIOMETER, 2,000Ω, 1/2 WATT
PG1	SN-560	PLUG, 6 PRONG
T1	SN-575	OUTPUT TRANSFORMER
T2	SN-1076	POWER TRANSFORMER
T3	SN-1107	INPUT TRANSFORMER
T4	SN-1106	OUTPUT TRANSFORMER
L1	SN-1073	REACTOR
VS1,2,3,4,6	SN-561	SOCKET, OCTAL
VS5	SN-562	SOCKET, 4 PRONG

DESIG.	PART NO.	APPARATUS
FS1	SN-554	FUSE RECEPTACLE
* VT1-VT2	SN-1066	VACUUM TUBE TYPE 6SJ7
* VT3-VT4	SN-1109	VACUUM TUBE TYPE 6L6
* VT5	SN-708	VACUUM TUBE TYPE 5Z3
* VT6	SN-1075	VACUUM TUBE 6F6
F1	SN-549	FUSETRON (2 AMP.)

*INDICATES NON-COMPONENT ITEM WHICH MUST BE ORDERED SEPARATELY.

AM-142
AMPLIFIER EQUIPMENT
WIRING DIAGRAM & SCHEMATIC
INTERNATIONAL PROJECTOR CORPORATION
55 LA FRANCE AVENUE
BLOOMFIELD NEW JERSEY
DR. CH'K. APP'D.
WD-159

1. DESCRIPTION

The AM-145 Unit is usually a wall mounted cabinet 11-3/4" high x 9-1/2" wide x 4-1/2" deep weighing 10 lbs. Sometimes it is mounted in a convenient location near the sound mechanism on a pipe support fastened to the floor. It contains an AM-1007 Preamplifier.

A. Characteristics of AM-1007 Amplifier

Type - Chassis type, 2 stage inverse feed-back with interstage resistance coupling. Provision is made for field mounting of a W.E. 127-C or 132-C output transformer for coupling to fader.

Gain - 39 db. maximum

Input Impedance - 250,000 ohms

Output Impedance - 500 ohms

Gain Control - In grid circuit of first tube - adjustable with screw driver.

Vacuum Tubes - 2 - 6C5 (furnished separately).

Power Supply - Plate voltage of 90 or 120V DC and filament voltage of 10V AC or 12V DC from external source.

P.E.C. Supply - Voltage divider furnishes voltage for sound mechanism P.E.C.

Equalization - Warping circuit in the inverse feed-back circuit.

Accessories - Terminal strip with plate and filament "ON-OFF" switch and an external cable form.

Associated Drawing - WD-160 Schematic and Wiring Diagram
SC-46 Frequency Response Chart.

2. INSTALLATION

A. On the Front Wall. Normally an AM-145 should be mounted below each observation post in such a location that the supplied length of SH-2100 Coaxial Cable (72") can be installed in the regular manner.

B. On a Pipe Support. Where the front wall space is inadequate to install the cabinet in the regular manner it may be mounted on a pipe support away from the wall, as shown in Fig.1, the pipe support threading into a flange (3/4" pipe thread) provided in the bottom of the cabinet.

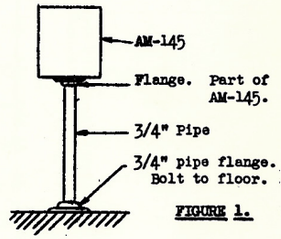

FIGURE 1.

C. External Connections. Terminal strip connections should be made per drawing WD-161 associated with the installation instructions.

D. Gain Control. The amplifier is shipped with the potentiometer P_1 set for a gain of 30 db. A reference mark on the amplifier chassis indicates this setting, which has been established for transmission runs. The potentiometer in each amplifier should be adjusted so that outputs are equal, and adequate volume level is obtained in the auditorium with normal setting of the fader, using a standard recording such as the Academy Test Reel. Variations in prints, size of audience, etc., should be compensated for by adjustment of the fader.

E. Warping Circuit Adjustments. The warping circuit is set for the L_{23}, H_{23} curve (See drawing SC-46). High and low end adjustments are provided as a means of obtaining the optimum overall system frequency response characteristic for the specific auditorium. Changes in the warping circuit should be made only after careful listening tests and checking of the operation of the other system components. In checking lens tube adjustment in SH-1000 or SH-1001 Sound Mechanism, the procedure described in Equipment Bulletin "SH-1000 Sound Mechanism" will be facilitated and the accuracy of adjustment increased by temporarily setting the high end warping circuit for the H_{20} curve since this setting raises the high end and reduces the masking effect of background noise.

3. OPERATION

For normal operation switches S_1 and S_2 should be set in "ON" position. These switches are provided to isolate the amplifier for service and test.

4. MAINTENANCE

A. Vacuum Tubes. The tubes should be tested monthly by substituting a new tube. Tube prongs should make good contact and should be clean and bright. Careful bending of the socket contacts may be resorted to and the prongs burnished with crocus cloth if necessary.

B. Capacitors. Check all clamping rings and nuts periodically, and tighten if necessary.

5. CONCEALED CONDUIT INSTALLATIONS

When the conduits from the AM-145 to the sound mechanism are concealed, or when coaxial cable lengths greater than 6' are required in exposed conduit layouts, Belden #8401 Microphone Cable should be substituted for the SH-2100 Coaxial Cable supplied, a compensating capacitor (obtain locally as required) substituted for C_8 in the high end warping circuit in the AM-145, and C_8 strapped to C_7, see Fig.2 below.

Since the value of the capacitor substituted for C_8 depends upon the amount of cable used, the length used for each projector should be carefully measured and the value of the capacitor determined from the Fig. 3 below. Standard mica capacitor(s) should be used.

This substitution is necessary, due to the difference in capacity of the two cables, in order to obtain the frequency response characteristic shown on drawing SC-46. This method of compensation applies to all high end curves, except H_{20} which may be considered a special condition.

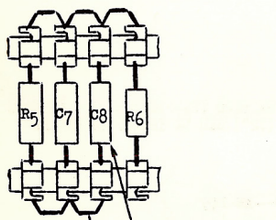

FIGURE 2.

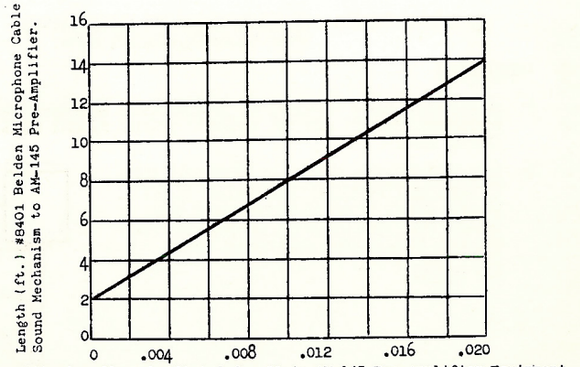

FIG. 3

WD-160

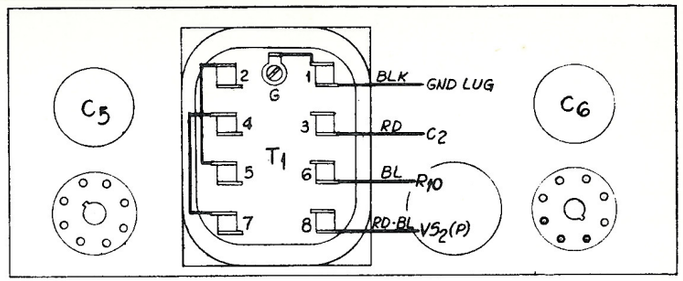

TOP VIEW OF CHASSIS

NOTES:
1 T1 IS A W.E. # 127-C OR 132-C OUTPUT TRANSFORMER, OBTAINED FROM REPLACED AMPLIFIERS AND INSTALLED IN THE FIELD.
2-REFER TO DRAWING SC-46 FOR WARPING CIRCUIT ADJUSTMENTS.

	DESIG	PART No.	APPARATUS
	C1, C10	SN-515	CAPACITOR - .005 MF - 500 V
	C2, C3, C4	" 506	" C4 $\frac{10}{50}$; C2 $\frac{8}{250}$, C3 $\frac{8}{150}$,
	C5	" 514	CAPACITOR - .05 MF - 400 V
	C6	" 511	" - .1 " - 200 V
	C7, C8	" 788	" .01 " - 500 V
	C9	" 1181	" .0025" - "
	R1	SN-1180	RESISTOR - 6 Ω - 5.5 WATT WIRE W.
	R2	" 772	" 510 Ω - 1/2 "
	R3	" 1071	" 100,000 Ω - 1/2 "
	R4, R11	" 580	" 270,000 Ω - 1 "
	R5	" 1130	" 2,000 Ω - 1 " WIRE W.
	R6	" 612	" 10,000 Ω - 1/2 "
	R7	" 540	" 24,000 Ω - 1/2 "
	R8, R10, R13	" 530	" 6,200 Ω - 1/2 "
	R9	" 531	" 5,000 Ω - 1/2 "
	R12	" 689	" 15,000 Ω - 1 "
	P1	SN-1186	POTENTIOMETER - 500,000 Ω
	T1	SEE NOTE	TRANSFORMER
	VS1, VS2	SN-561	OCTAL SOCKET
	S1, S2	" 608	SWITCH - D.P.S.T. (PART OF AM-2080 TERM. ST.)
	TS1	AM-2080	TERMINAL STRIP ASSEMBLY
*	VT1, VT2	SN-1179	VACUUM TUBE - TYPE 6C5

* INDICATES NON-COMPONENT ITEM WHICH MUST BE ORDERED SEPARATELY.

ISSUE:1 6-23-39
SN-1130 WAS SN-534. SN-1180 WAS 5.0 WATTS

ISSUE:2 12-20-39
ADDED "GR-RD" TC WIRE FROM R5 TO C-2 & VS1, ADDED YEL-GR TO WIRES OF S1 TO 12 V & 10V TERM'S, ADDED "RD" TO JUMPER WIRE FROM S2 TO PLATE TERM, CHGD VALUES OF RESISTORS IN SCHEDULE AS FOLLOWS - SN-772 WAS 500 Ω, SN-530 WAS 250,000 Ω, SN-540 WAS 25,000 Ω, SN-530 WAS 6,000 Ω

ISSUE 3 1-20-40

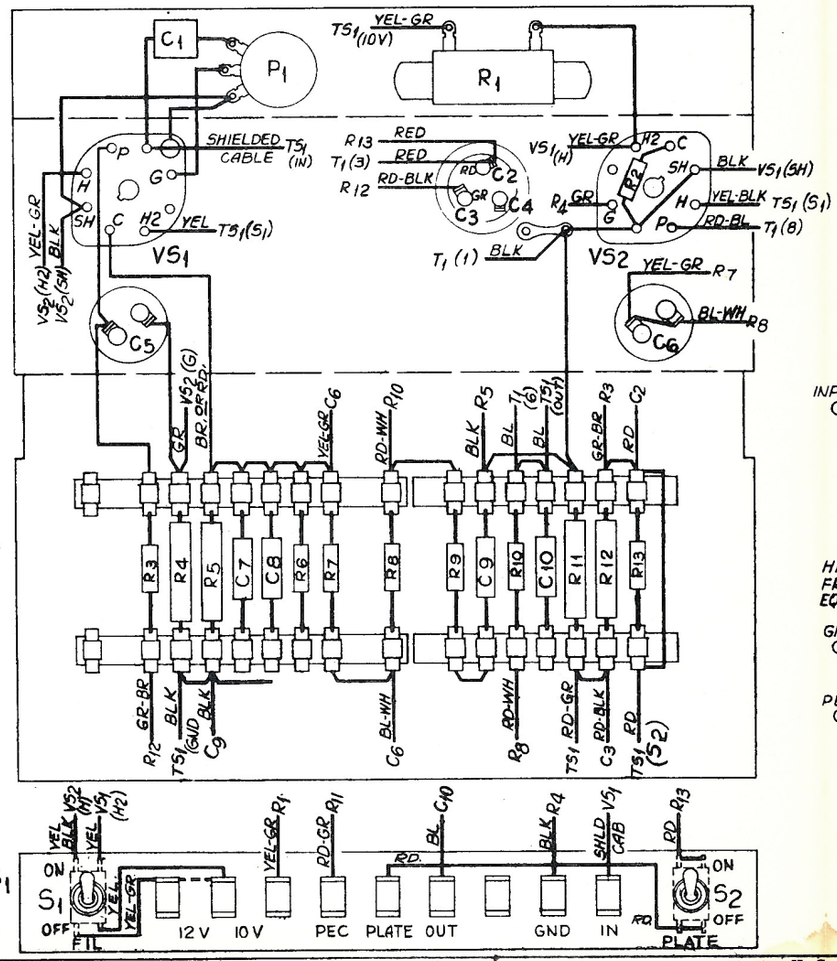

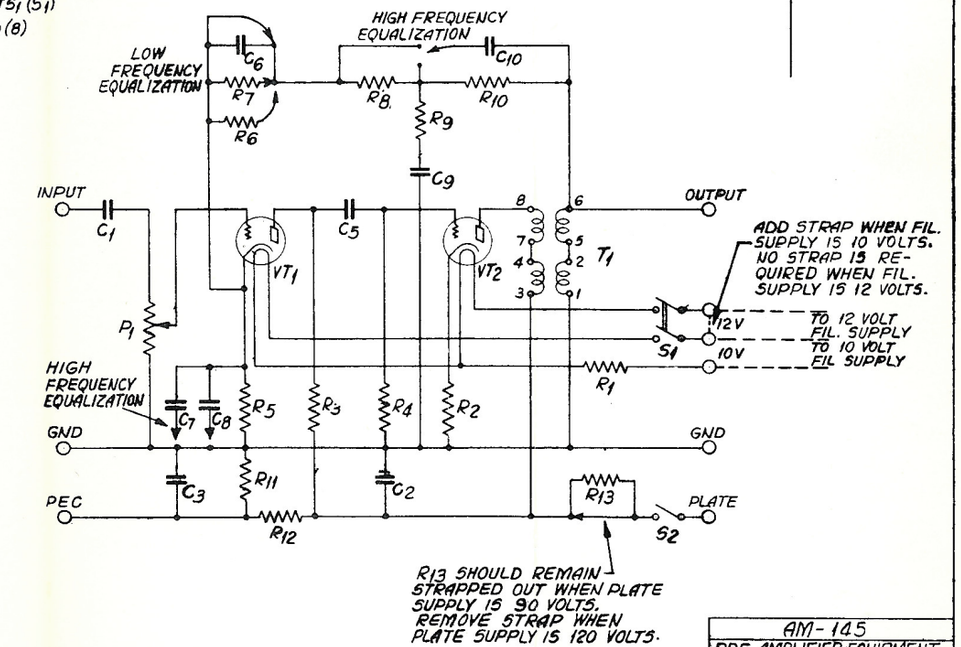

AM-145
PRE AMPLIFIER EQUIPMENT
WIRING DIAGRAM & SCHEMATIC
INTERNATIONAL PROJECTOR CORPORATION
90 GOLD STREET NEW YORK
DR E.G.M. CHK C.F.A. APPD MB

WD-160

WD-164

AM-147 AMPLIFIER-MONITOR SPEAKER			ISSUE:-1
DESIG.	PART NO.	APPARATUS	
C_1	SN-502	CAPACITOR 25 MF 50V	
C_2 & C_3	"-1291	" 8-8 MF 400V	
F_1	"-540	FUSETRON 2 AMP	
FS_1	"-554	FUSE RECEPTACLE	
LP_1	"-894	LAMP (9 VOLT. 2 AMP)	
P_1	"-1301	POTENTIOMETER 500,000 Ω	
R_1	"-535	RESISTOR 250 Ω 10 WATT W.W.	
S_1	"-608	SWITCH D.P.S.T.	
SPKR	LU-1053	MONITOR UNIT	
T_1	SN-1290	POWER TRANSFORMER	
VS_1	"-561	OCTAL SOCKET	
VT_1	"-1293	VACUUM TUBE TYPE 5Y4	
VT_2	"-1109	" " " 6L6	
SKT_1	"-1294	PILOT LAMP SOCKET	
	"-1309	CABLE FORM	
TS_1	AM-2086	TERMINAL STRIP	

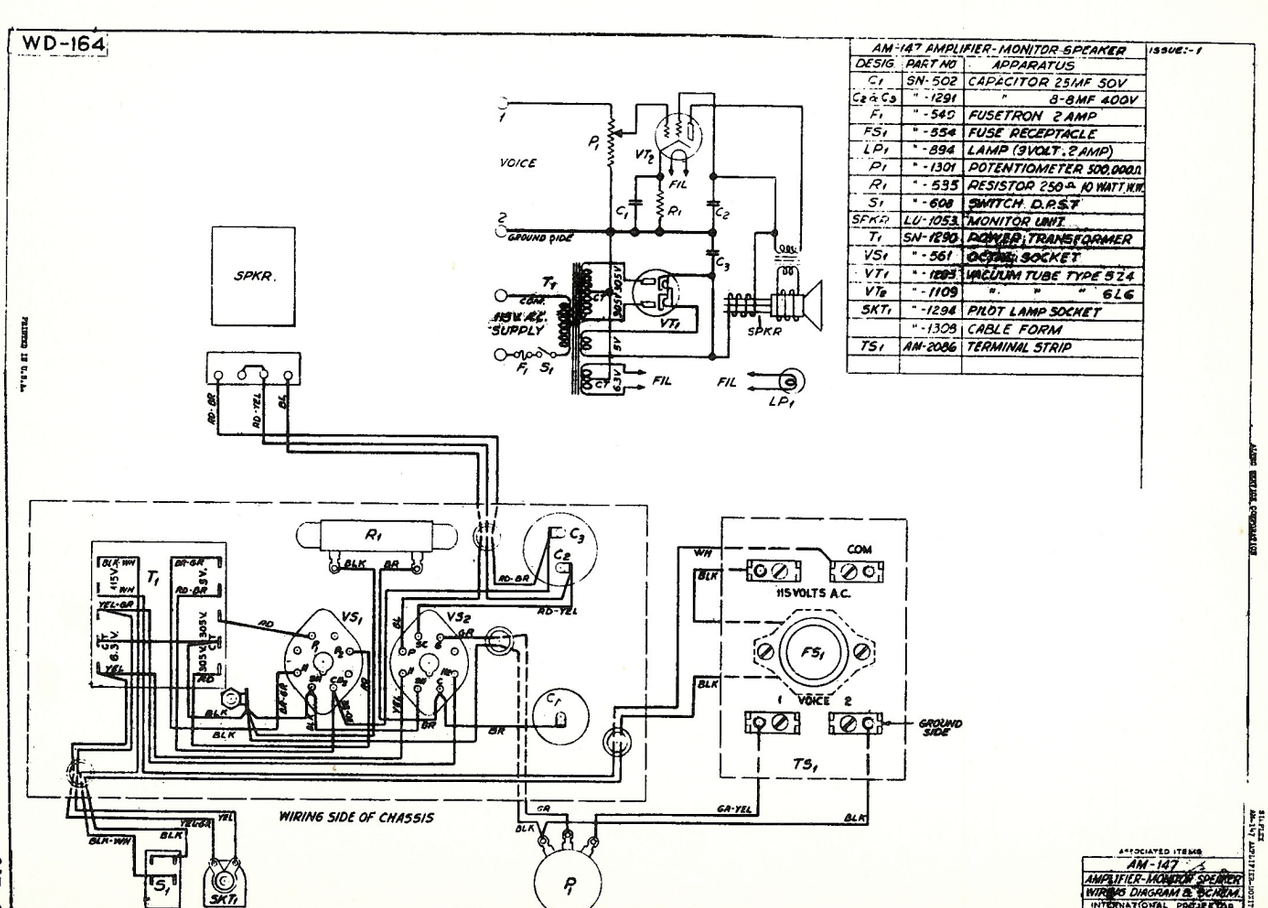

ASSOCIATED ITEMS
AM-147
AMPLIFIER-MONITOR SPEAKER
WIRING DIAGRAM & SCHEM.
INTERNATIONAL PROJECTOR CORPORATION
WD-164

WD-164

1. DESCRIPTION

The AM-148 Unit is a wall mounted cabinet 12-1/2" high x 9" wide x 6-1/2" deep, weighing 13 lbs. It contains two AM-1012 Volume Control Amplifiers. The cabinet is mounted for exposed conduit installations, and may be partially recessed in the wall when conduit is concealed.

A. Characteristics of AM-1012 Amplifier

Type	-	Chassis type, two stage resistance coupled inverse feedback.
Gain	-	46 db.
Input Impedance	-	250,000 ohms.
Output Impedance	-	10,000 ohms.
Gain Control	-	Potentiometer 20 steps - 2 db each.
P.E.C. Control	-	R_3 adjustable resistor with range of 6 db in cathode of first tube for equalization of P.E.C. output.
Vacuum Tubes	-	One 1620 in first stage and one 6J7 in second stage.
Power Supply	-	Plate and filament supply obtained from power amplifier and voltage divider in AM-1012 provides P.E.C. polarizing potential.
Accessories	-	Terminal strip on external cable providing for external connections, and also "ON", "OFF", switch for cutting out amplifier.
Associated Dwg.	-	WD-167 Schematic & Wiring Diagram

B. Changeover is made between machines by means of either AM-149 or AM-165 Switching Cabinets.

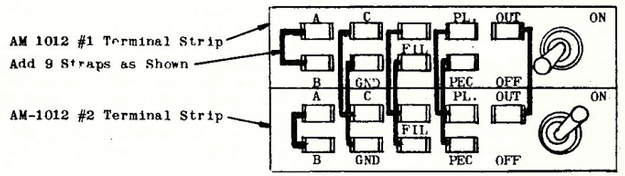

F I G U R E 1.

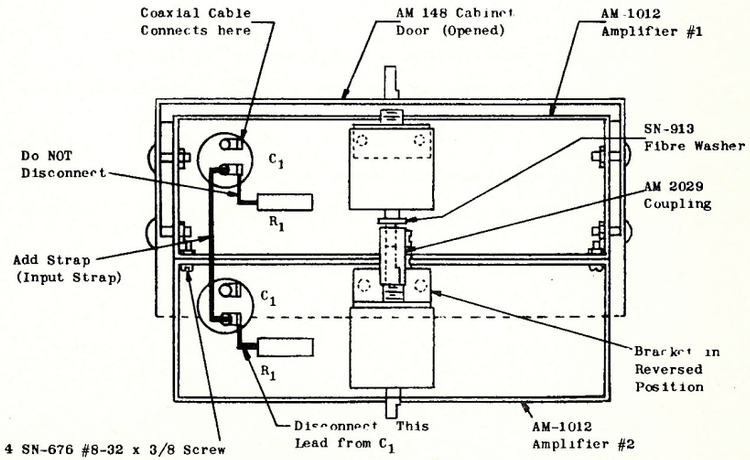

F I G U R E 2.

2. INSTALLATION OF AM-148

Each AM-148 should be mounted as shown on conduit layouts. Since a fixed length of SH-2100 Coaxial Cable is shipped with the system for coupling between the PEC output and AM-1012 input when the conduit is exposed, it is essential that the volume control amplifier be so located that the coaxial cable can be properly installed and connected. When the conduit is concealed, Belden #8401 Microphone Cable should be used instead of SH-2100.

A. External Connections. The connections to the terminal strips should be made per the system wiring diagram. All wires connected to terminals in the cabinet should run below the terminal strips and not above, to avoid possible interference between these wires and the AM-1012 chassis when the cabinet is closed.

The microphone cable, connected to the output terminal, should be securely fastened, by means of cord through tie cord holes in the terminal strip, in such a manner that there is no strain on the conductor.

Terminals on the two AM-1012 should be strapped together per Figure 1. The inputs should be strapped by connecting a wire between the lower terminals of C_1 in each amplifier (see Figure 2). In the second AM-1012 only disconnect R_1 from C_1 per Figure 2.

B. Equalization of PEC Outputs. Resistor R_3 in each AM-1012 should be adjusted so that the output of all volume control amplifiers is the same, with the same setting of the main volume control. This resistor should be adjusted after all adjustments have been made in the sound mechanism, and when carefully made will accurately equalize outputs.

C. Volume Control. In establishing normal operating level initially for a specific auditorium, set the volume control on step 9, run a standard recording, such as the Academy Test Reel, and adjust the gain control in the power amplifier as required to obtain adequate volume level in the auditorium.

3. OPERATION

A. Normal. Set the switch on the terminal strip of Amplifier #1 in "OFF" position, and the similar switch on Amplifier #2 in "ON" position. The second amplifier, which is slightly more accessible for tube replacements and servicing, is then the regular, and the first the standby amplifier. Set the changeover switch so that the projector being threaded is inoperative and make the changeover, when the in-coming machine is up to speed, by operation of the changeover switch. As noted in Section 2-C above, the volume control should be set as required by the specific installation conditions.

B. Emergency. If the regular amplifier becomes inoperative in either cabinet:

(1) Set the volume control in that cabinet on step 1. This is important to prevent disturbances in the sound circuit when the switches are operated as described below.

(2) Set the switch on the regular amplifier in that cabinet in "OFF" position.

(3) Set the switch on the standby amplifier in that cabinet in "ON" position.

(4) Return the volume control to normal setting, and the system may be operated in the regular way.

4. MAINTENANCE

A. Vacuum Tubes. The prongs should make good contact, and should be clean and bright.

B. Capacitors. Check all clamping rings and nuts periodically, and tighten if necessary.

ALTEC SERVICE CORPORATION
SIMPLEX

AM-1012 AMPLIFIER

WD-167

ISSUE: 1 6-13-40

DESIG.	PART #	APPARATUS
$C_1 C_2 C_3$	SN 514	CAPACITOR .05 MF 400V.
C_3	" 503	" 10 MF 50V.
C_5	" 505	" 10 MF 50V - PAPER TUBE
$C_6 C_7 C_8$	" 506	" C_6 8/150 C_7 8/250 C_8 10/50
C_9	" 1351	" .05 MF. 400V. - PAPER
R_1	" 539	RESISTOR 500,000Ω 1W I.R.C. TYPE BT-1
R_2	" 1129	" 5,000Ω 1W " " WW
R_3	" 532	" 5,000Ω 10W " " AB-A
R_4	" 538	" 200,000Ω 1W " " BT-1
$R_5 R_{14}$	" 537	" 2 MEG ½ W " " BT-½
$R_6 R_7$	" 530	" 6,000Ω ½ W " " BT-½
R_8	" 612	" 10,000Ω ½ W " " BT-½
R_9	" 522	" 70,000Ω 1W " " BT-1
R_{10}	" 523	" 55,000Ω 1W " " BT-1
R_{11}	" 689	" 15,000Ω 1W " " BT-1
R_{12}	" 527	" 25,000Ω 1W " " BT-1
R_{13}	" 688	" 50,000Ω ½ W " " BT-½
R_{15}	" 521	" 75,000Ω 1W " " BT-1
P_1	" 541	POTENTIOMETER 500,000Ω 19-20DB STEPS
TS_1	AM-2117	TERMINAL STRIP
$TS_2 TS_3$	SN 611	" "
S_1	" 968	SWITCH D.P.D.T. (PART OF AM-2117)
$S_1 V S_2$	" 561	SOCKET

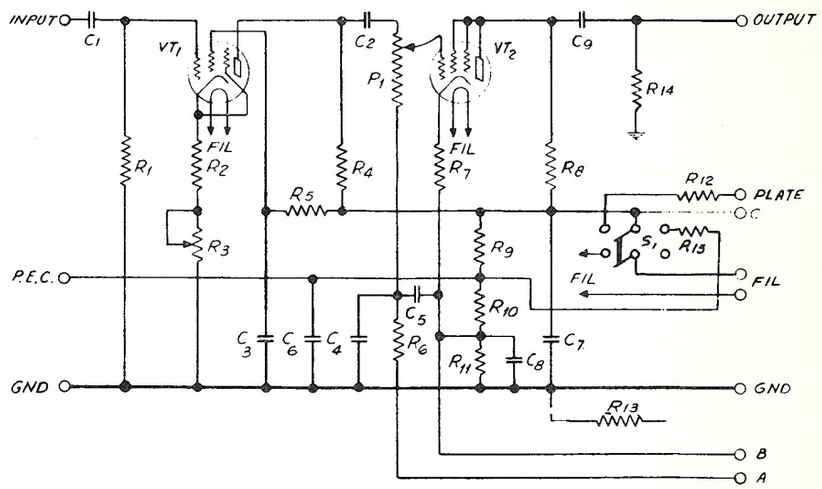

SCHEMATIC

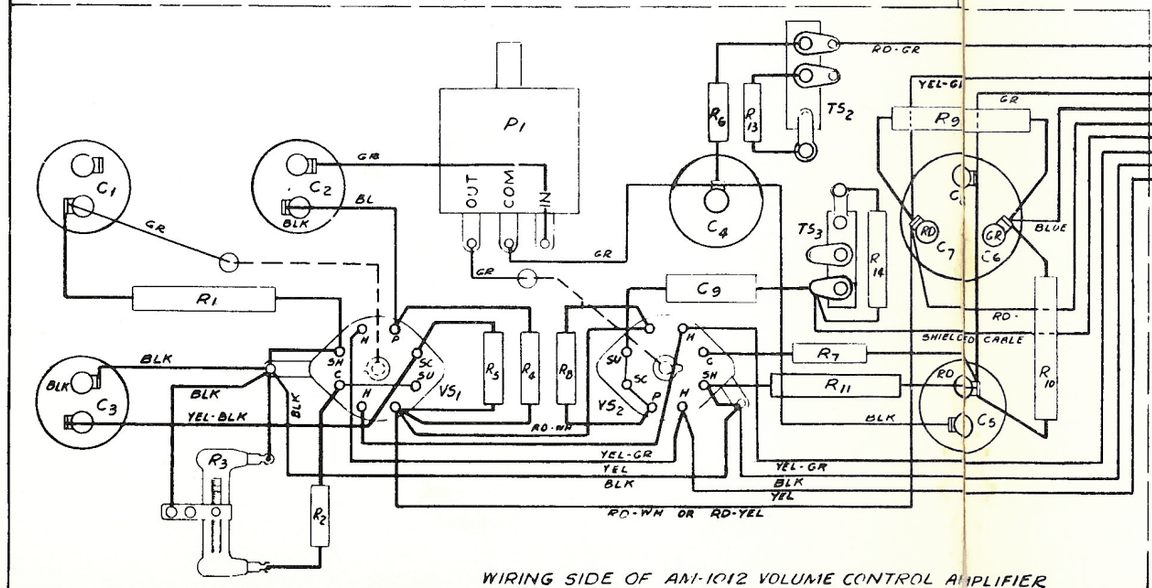

WIRING SIDE OF AM-1012 VOLUME CONTROL AMPLIFIER

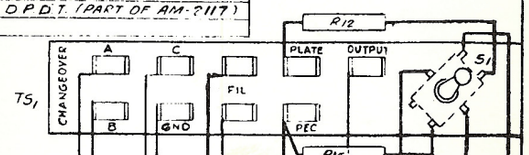

NOTES:-

1. ADJUST RESISTOR R_3 (RANGE 6DB) SO THAT OUTPUT OF EACH VOLUME CONTROL AMPLIFIER IS THE SAME WITH THE SAME SETTING OF THE VOLUME CONTROL (P_1). MOVE THE SLIDER AWAY FROM THE CHASSIS TO INCREASE THE GAIN.

2. VACUUM TUBES REQUIRED:-
   $V S_1$ - SN-792 (6J7-B31 STOCK). SPECIALLY SELECTED TUBE DISTINGUISHED BY AN "X" ON THE BOTTOM OF THE TUBE.
   $V S_2$ - SN-707 (STANDARD 6J7). SOME TUBES MAY BE MARKED WITH AN "M" ON THE BOTTOM.

AM-1012
VOLUME CONTROL AMPLIFIER
WIRING DIAGRAM & SCHEM.
INTERNATIONAL PROJECTOR CORPORATION
90 GOLD STREET NEW YORK
DR JLS CHK APPD
WD-167

ALTEC SERVICE CORPORATION
SIMPLEX
SOUND EQUIPMENT BULLETIN

AM-169
AM-169-X

1. DESCRIPTION.

The AM-169 consists of one AM-1014 Volume Control Amplifier, an AM-2156 Switch, a sound and exciter lamp changeover switch and a pilot lamp in a wall mounting metal cabinet 12½" high x 9" wide x 6½" deep, total weight 14 lbs. The AM-169-X includes two AM-1014 Volume Control Amplifiers. Otherwise it is the same as the AM-169. The cabinet is surface mounted for exposed conduit installations and may be partially recessed in the wall when the conduit is concealed.

A. The AM-1014 Volume Control Amplifier is a two-stage, resistance coupled, inverse feedback amplifier using one #1620 and one 6J7 tube, which are furnished separately. The #1620 is a low noise level tube and should be installed in the first stage, The maximum gain is 46 db., input impedance 250,000 ohms, output impedance 10,000 ohms. It contains a main system volume control, consisting of a potentiometer having twenty 2 db steps, which regulates the volume by varying the signal voltage applied to the grid of the second tube. When two AM-1014 are included, the two potentiometers are coupled together mechanically so that the knob on the front of the cabinet controls the volume, irrespective of the AM-1014 in use.
An adjustable resistor (R_3), range of 6 db., is provided in the cathode circuit of the first tube of each amplifier for equalization of PEC outputs by adjustment of the gain of the amplifier. Plate and filament supply are obtained from the power amplifier and a voltage divider in each amplifier provides PEC polarizing potential. A terminal strip is provided for external connections.

B. The AM-2156 Switch consists of a three-position selector switch ("Emerg"-"Reg"-"Off") with an adjustable stop and knob, and a two-position jack switch (Reg-Serv) mounted on a suitably engraved name-plate. A terminal strip on a ex tension cable form is provided for external connections and two cable forms for connection to the AM-1014 are also included.
In the AM-169-X the selector switch selects either of the two AM-1014 in the cabinet ("Reg-"Emerg") or disconnects both amplifiers ("Off") and connects the associated sound mechanism to the other operative cabinet. The two-position jack switch in the operative cabinet completes the connection ("Serv") so that both sound mechanism outputs are connected to the amplifier(s) in the operative cabinet. In the AM-169 the stop on the selector switch is set so that "Regular" and "Off" positions only are usable. Thus an inoperative amplifier or an entire cabinet may be completely isolated and is available for immediate servicing.

C. Changeover is made at either machine,by operating the switch lever on the front of either cabinet. Under regular operating conditions, sound and exciter lamp are transferred at the same time by means of the three-way circuit employed. An electronic type of changeover is used. In the "ON" amplifier the second tube has normal bias, whereas in the "OFF" amplifier the bias of this tube is increased beyond cutoff and the amplifier is inoperative. There is no switching in the sound circuit and the changeover is instantaneous and noisless.
When the AM-2156 Switch is set so that both sound mechanism outputs are connected to one cabinet, changeover is by exciter lamp only, the volume control amplifier being biased on at all times. Exciter lamp changeover provides for

Issued by
Engineering Department
Printed in U.S.A.

Issue #1
November 22, 1944

preheating of the standby lamp on AC to eliminate thermal lag in the filament. The pilot lamp indicates the sound mechanism in use.

2. INSTALLATION.

One AM-169 or AM-169-X should be mounted approximately 3" below the bottom of each observation port, or at such a height that the 1" conduit between the two cabinets is below the projection port. Since a fixed length of SH-2100 Coaxial Cable is shipped with the system for coupling between the PEC output and volume control amplifier input, it is essential that the volume control amplifier be so located that the coaxial cable can be properly connected.

A. External Connections. The connections to the terminal strips should be made per the system wiring diagram. All wires connected to terminals in the cabinet should run below the terminal strips AND NOT ABOVE, to avoid possible interference between these wires and the amplifier chassis.
The microphone cables should be securely fastened, by means of cord through tie cord holes in the terminal strip, in such a manner that there is no strain on the conductor.

B. Equalization of PEC Outputs. Resistor R_3 in each AM-1014 should be adjusted so that the output of all volume control amplifiers is the same, with the same setting of the main volume control. This resistor should be adjusted after all adjustments have been made in the sound mechanism and when carefully made will accurately equalize outputs.

C. Volume Control. The main volume control should be adjusted as required to compensate for variations in prints, size of audience, etc. In establishing normal operating level initially for a specific auditorium, set the volume control on step 9, run a standard recording, such as the Academy Test Reel, and adjust the gain control in the power amplifier as required to obtain adequate volume level in the auditorium.

3. INSTALLATION OF SECOND AM-1014.

When the second AM-1014 is added after the initial installation (Figure 1), the procedure is as follows:-

A. AM-2156 Switch. Remove the selector switch from its mounting plate and adjust the stop so that the switch moves through three positions ("Emerg"-"Reg"-"Off"). Remount the switch on the mounting plate.

B. Remove the AM-1014 from the cabinet without disconnecting the wires to the terminal strip. This amplifier is the regular amplifier and is remounted per "F" below.

C. Install the second AM-1014 in place of the amplifier removed under "B" above.

D. On the regular amplifier, remove the potentiometer from its bracket. Do not disconnect the wires. Reverse the potentiometer mounting bracket to provide space for the AM-2029 Coupling and remount the potentiometer.

E. Install the fiber washer (required to avoid grounding) and the AM-2029 Coupling on the potentiometer shaft of the emergency amplifier.

F. Attach the regular amplifier to the emergency amplifier per Figure 1.

G. Line up the two potentiometers. A slotted hole is provided in the bracket for this purpose. Tighten the coupling set screw and the potentiometer locknut.

H. Equalization of photo-electric cell outputs and volume control setting should be in accordance with Sections 2-B and 2-C.

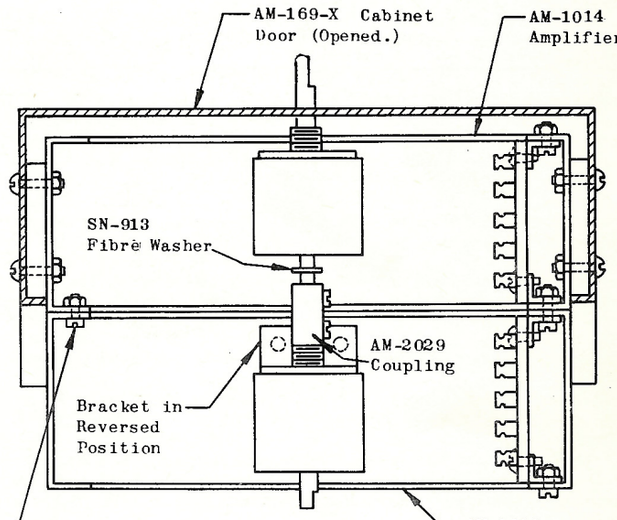

4 SN-676 #8-32 x 3/8 Screw
4 SN-683 #8-32 Hex Nut
4 SN-685 Lockwasher
4 SN-169 Std.Washer

FIGURE 1.

4. OPERATION.

A. Normal. Set both the selector switch and the two-position jack switch in "Reg" position. Set the changeover switch so that the projector being threaded is inoperative (pilot light is out) and make the changeover, when the incoming machine is up to speed, by operating the switch lever on either cabinet. As noted in Section 2-C above, the volume control should be set as required by the specific installation conditions.

B. Emergency.
(1) Regular amplifier in either cabinet becomes inoperative.
(a) Set the selector switch in "Emerg" position if dual amplifiers are installed. If only one AM-1014 is installed in each cabinet, see Paragraph (2) below.
(2) Entire cabinet becomes inoperative.
(a) Set the selector switch in inoperative cabinet in "Off" position.
(b) Set the jack switch in the other cabinet in "Serv" position. The pilot lamp then indicates only which sound mechanism is in operation. The volume control in the cabinet in which the jack switch is set in "Serv" position controls the volume of both machines and should be adjusted in the regular way.
NOTE:- In order to avoid clicks in the stage speakers when operating the AM-2156 Switch, the "PHONO"-"FILM"-"MICR" switch in the AM-170 NS-Amplifier Assembly should be set in either "NS" or "MICR" position before the switch is operated and returned to "FILM" position afterward.

5. MAINTENANCE.

A. Vacuum Tubes. The prongs should make good contact and should be clean and bright. Careful bending of the socket contacts may be resorted to and the prongs burnished with crocus cloth, if necessary, to provide good contact.

B. Capacitors. Check all clamping rings and nuts periodically and tighten if necessary.

C. Pilot Lamp. If the pilot lamp does not light, check the fuse mounted on the terminal strip mounting bracket, as removal of the exciter lamp while the power unit is in operation may cause the fuse to blow. Otherwise the pilot lamp should be replaced by removing the socket from the inside of the cabinet. A flickering pilot lamp indicates a defective tungar bulb in the exciter lamp power unit.

6. ORDERING.

A second amplifier for one cabinet should be ordered as:-

1 AM-1014 Volume Control Amplifier
1 SN-707 Vacuum Tube (6J7)
1 SN-792 Vacuum Tube (#1620)
1 AM-2016 Mounting Parts, Consisting of:-
1 AM-2029 Coupling
1 SN-913 Fiber Washer
6 SN-676 Screw (8/32 x 3/8 R.H.I.)
8 SN-683 Nut (8/32)
8 SN-685 Lockwasher (#1108)
4 SN-169 Standard Washer

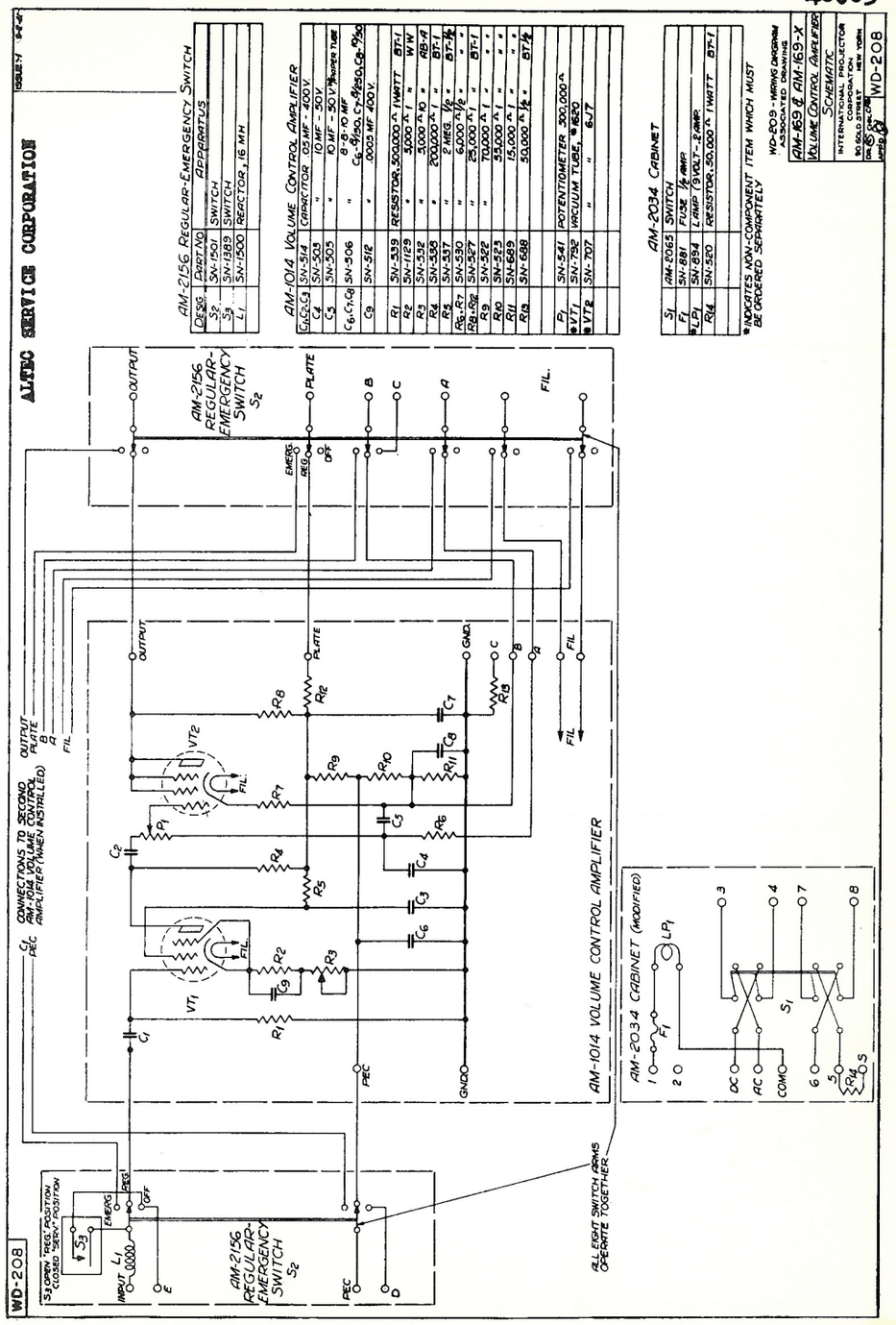

Printed in U.S.A.

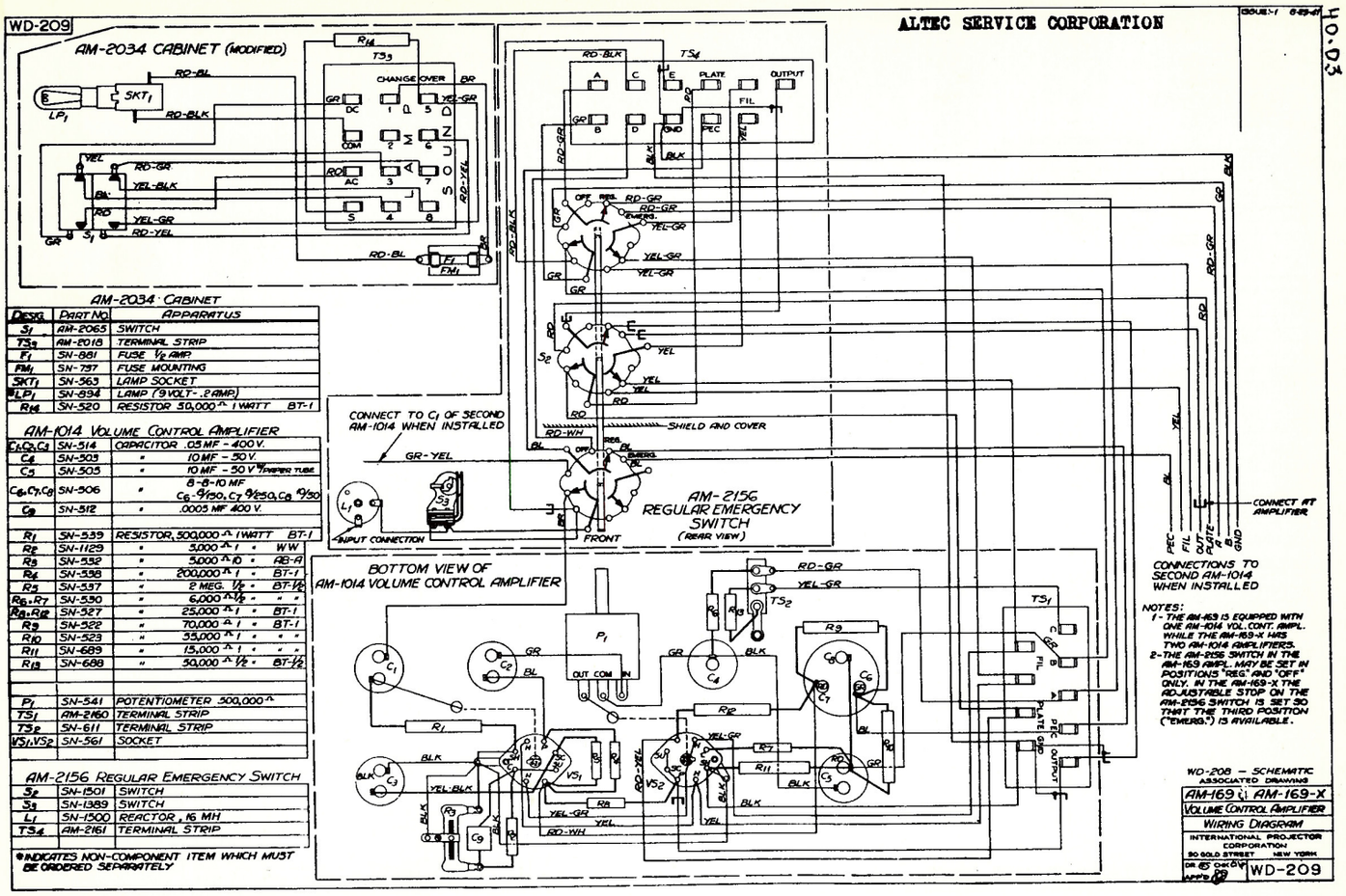

DESIG.	PART NO.	APPARATUS
S_1	AM-2065	SWITCH
TS_3	AM-2018	TERMINAL STRIP
F_1	SN-881	FUSE ½ AMP
FM_1	SN-737	FUSE MOUNTING
SKT_1	SN-563	LAMP SOCKET
LP_1	SN-894	LAMP (9 VOLT-.2 AMP)
R_{14}	SN-520	RESISTOR 30,000 Ω 1 WATT BT-1

AM-1014 VOLUME CONTROL AMPLIFIER

C_1, C_2, C_3	SN-514	CAPACITOR .05 MF - 400 V.
C_4	SN-503	" 10 MF - 50 V.
C_5	SN-505	" 10 MF - 50 V. TWIST-PRONG TUBE
C_6, C_7, C_8	SN-506	" 8-8-10 MF C_6 9/150, C_7 9/250, C_8 9/50
C_9	SN-512	" .0005 MF 400 V.
R_1	SN-539	RESISTOR, 500,000 Ω 1 WATT BT-1
R_2	SN-1129	" 5,000 Ω 1 % WW
R_3	SN-552	" 5,000 Ω 10 % AB-A
R_4	SN-558	" 200,000 Ω 1 % BT-1
R_5	SN-537	" 2 MEG. ½ % BT-½
R_6-R_7	SN-530	" 6,000 Ω ½ % " "
R_8-R_{12}	SN-527	" 25,000 Ω 1 % BT-1
R_9	SN-522	" 70,000 Ω 1 % BT-1
R_{10}	SN-523	" 35,000 Ω 1 % " "
R_{11}	SN-689	" 15,000 Ω 1 % " "
R_{13}	SN-688	" 50,000 Ω ½ % BT-½
P_1	SN-541	POTENTIOMETER 500,000 Ω
TS_1	AM-2160	TERMINAL STRIP
TS_2	SN-611	TERMINAL STRIP
VS_1, VS_2	SN-561	SOCKET

AM-2156 REGULAR EMERGENCY SWITCH

S_2	SN-1501	SWITCH
S_3	SN-1389	SWITCH
L_1	SN-1500	REACTOR, 16 MH
TS_4	AM-2161	TERMINAL STRIP

*INDICATES NON-COMPONENT ITEM WHICH MUST BE ORDERED SEPARATELY

Printed in U.S.A.

1. DESCRIPTION.

The AM-170 consists of an AM-1015 NS-Amplifier, an AM-2157 Switch and an AM-2158 NS-ANN Switching Attachment in a wall mounting metal cabinet 12½" high x 9" wide x 6½" deep, total weight 12 lbs. The cabinet is surface mounted for exposed conduit installations and may be partially recessed in the wall when the conduit is concealed.

A. The AM-1015 NS-Amplifier is a two-stage, resistance coupled, inverse feedback amplifier using one #1620 and one 6J7 tube, which are furnished separately. The #1620 is a low noise level tube and should be installed in the first stage. The maximum gain is 46 db., input impedance 250,000 ohms, output impedance 10,000 ohms. It contains a main system volume control, consisting of a potentiometer having twenty 2 db steps, which regulates the volume by varying the signal voltage applied to the grid of the second tube.
An adjustable resistor (R_3), range 6 db., is provided in the cathode circuit of the first tube of the amplifier for adjustment of the gain of the amplifier. Plate and filament supply are obtained from the power amplifier. A terminal strip on an external cable form is provided for external connections.

B. The AM-2157 Switch is a two-position selector switch which provides for the isolation of the AM-1015 Amplifier in case it becomes inoperative, thereby rendering it available for immediate servicing.

C. The AM-2158 NS-ANN Switching Attachment consists of a three-position selector switch and knob, two single circuit jacks and four resistors on a suitably engraved plate. A terminal strip on an extension cable form is provided for external connections. The AM-2158 selects any one of three inputs; film in middle position, microphone in left position (500,000 ohms) and turntable in right position (500 ohms).

2. INSTALLATION.

The AM-170 should be located in a convenient position in the projection room, preferably adjacent to the turntable when one is used. Connections to the terminal strips should be made according to the system wiring diagram.

3. OPERATION.

A. AM-2158 NS-ANN Switching Attachment.

1. Film Reproduction. Set the selector switch in "FILM" position, system operation is normal and the special inputs are disconnected.

2. Microphone or Turntable Reproduction. Set the selector switch in left or right position respectively and adjust the volume control for proper auditorium level. If plug connections are used, be sure the plug is in the jack. With the switch in either left or right position, both sound mechanisms and their associated volume control amplifiers are inoperative.

B. AM-2157 Switch.

1. Normal. Set the selector switch in "ON" position.

Issued by
Engineering Department
Printed in U.S.A.

Issue #1
November 22, 1944

2. Emergency. Set the selector switch in "OFF" position if the AM-2015 Amplifier becomes inoperative. Since input, output, plate and filament are disconnected, the amplifier is completely isolated an may be serviced without interfering with the operation of the sound system.

4. MAINTENANCE.

A. Vacuum Tubes. The prongs should make good contact and should be clean and bright. Careful bending of the socket contacts may be resorted to and the prongs burnished with crocus cloth, if necessary, to provide good contact.

B. Capacitors. Check all clamping rings and nuts periodically and tighten if necessary.

5. ASSOCIATED DRAWINGS. WD-210 Schematic.
WD-211 Wiring Diagram.

WD-210

ALTEC SERVICE CORPORATION

ISSUE:-1 9-10-41

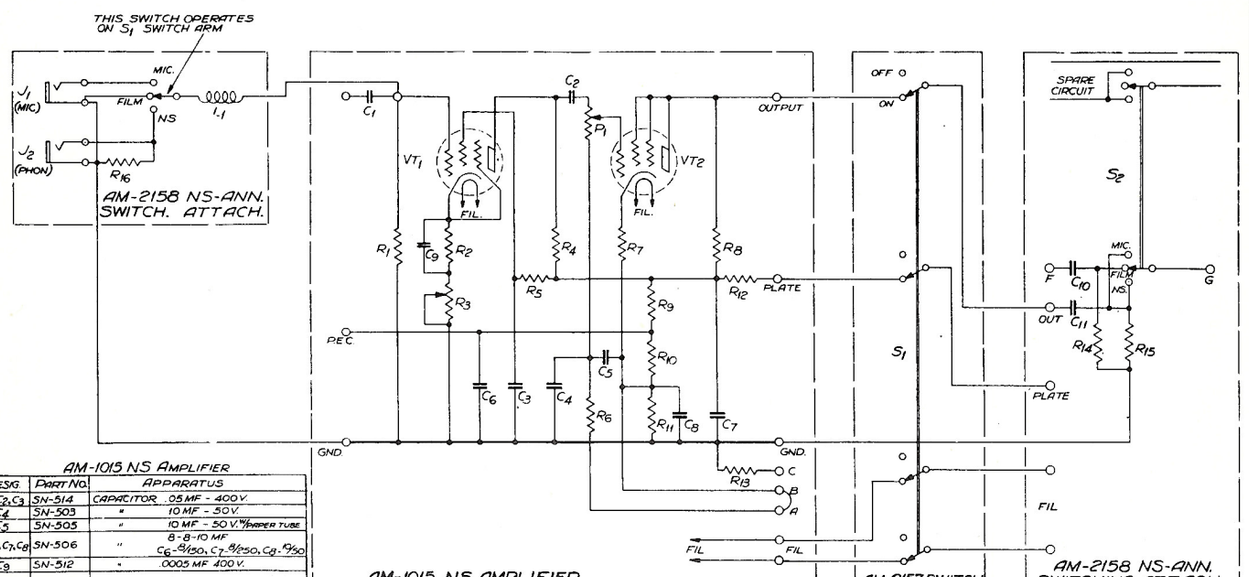

AM-1015 NS AMPLIFIER

DESIG.	PART NO.	APPARATUS
C_1, C_2, C_3	SN-514	CAPACITOR .05 MF - 400 V.
C_4	SN-503	" 10 MF - 50 V.
C_5	SN-505	" 10 MF - 50 V. W/PAPER TUBE
C_6, C_7, C_8	SN-506	" 8-8-10 MF C_6-8/150, C_7-8/250, C_8-10/50
C_9	SN-512	" .0005 MF 400 V.
R_1	SN-539	RESISTOR, 500,000 Ω 1 WATT BT-1
R_2	SN-1129	" 5,000 Ω 1 " WW
R_3	SN-532	" 5,000 Ω 10 " AB-A
R_4	SN-538	" 200,000 Ω 1 " BT-1
R_5	SN-537	" 2 MEG. 1/2 " BT-1/2
R_6, R_7	SN-530	" 6,000 Ω 1/2 " " "
R_8	SN-1496	" 12,500 Ω 1 " BT-1
R_9	SN-522	" 70,000 Ω 1 " BT-1
R_{10}	SN-523	" 55,000 Ω 1 " " "
R_{11}	SN-689	" 15,000 Ω 1 " " "
R_{12}	SN-527	" 25,000 Ω 1 " " "
R_{13}	SN-688	" 50,000 Ω 1/2 " BT-1/2
P_1	SN-541	POTENTIOMETER 500,000 Ω
* VT_1	SN-792	VACUUM TUBE, #1620
* VT_2	SN-707	" " 6J7

* INDICATES NON-COMPONENT ITEM WHICH MUST BE ORDERED SEPARATELY

AM-2158 NS-ANN. SWITCHING ATTACHMENT

C_{10}, C_{11}	SN-788	CAPACITOR .01 MF
J_1, J_2	SN-610	JACK
L_1	SN-1500	REACTOR, 16 MH
R_{14}, R_{15}	SN-537	RESISTOR, 2 MEG. 1/2 WATT BT-1/2
R_{16}	SN-1030	" 500 Ω 1 WATT BT-1
S_2	SN-1497	SWITCH

AM-2157 PARTS LIST

S_1	SN-1498	SWITCH

WD-211 WIRING DIAGRAM
ASSOCIATED DRAWING

AM-170
NS AMPLIFIER ASSEMBLY
SCHEMATIC

INTERNATIONAL PROJECTOR CORPORATION
90 GOLD STREET NEW YORK

DR. CHK. CHK. APPD. WD-210

Printed in U.S.A.

1.0.03

ALTEC SERVICE CORPORATION

ISSUE:-1

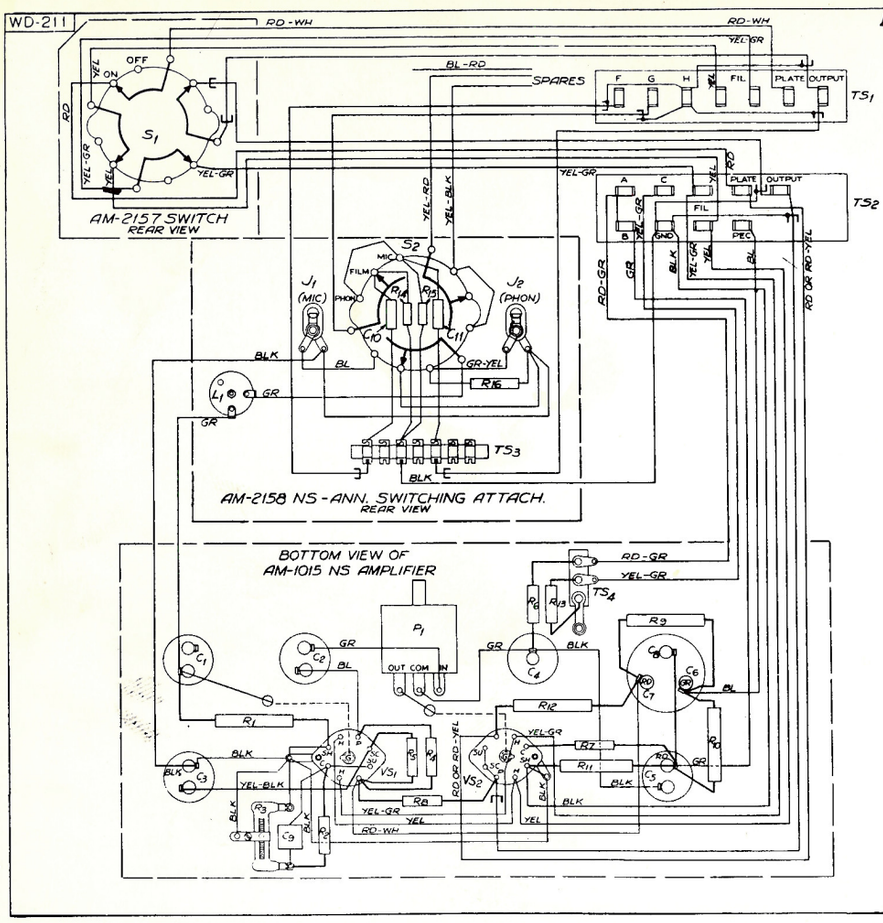

AM-2157 Switch

DESIG.	PART NO.	APPARATUS
S1	SN-1498	SWITCH

AM-2158 NS-Ann. Switching Attachment

C10, C11	SN-788	CAPACITOR, .01 MF
J1, J2	SN-610	JACK
L1	SN-1500	REACTOR, 16 MH
R14, R15	SN-537	RESISTOR, 2 MEG. 1/2 WATT BT-1/2
R16	SN-1030	" 500Ω 1 WATT BT-1
S2	SN-1497	SWITCH

AM-1015 NS Amplifier

C1, C2, C3	SN-514	CAPACITOR, .05 MF - 400 V.
C4	SN-503	" 10 MF - 50 V.
C5	SN-505	" 10 MF - 50 V. W/PAPER TUBE
C6, C7, C8	SN-506	" 8-8-10 MF C6-8/150, C7-8/250, C8-10/50
C9	SN-512	" .0005 MF 400 V.
R1	SN-539	RESISTOR, 500,000 Ω 1 WATT BT-1
R2	SN-1129	" 5,000 Ω 1 " " WW
R3	SN-532	" 5,000 Ω 10 " AB-A
R4	SN-538	" 200,000 Ω 1 " BT-1
R5	SN-537	" 2 MEG. 1/2 " BT-1/2
R6, R7	SN-530	" 6,000 Ω 1/2 " BT-1/2
R8	SN-1496	" 12,500 Ω 1 " BT-1
R9	SN-522	" 70,000 Ω 1 " " "
R10	SN-523	" 55,000 Ω 1 " " "
R11	SN-689	" 15,000 Ω 1 " " "
R12	SN-527	" 25,000 Ω 1 " " "
R13	SN-688	" 50,000 Ω 1/2 " BT-1/2
P1	SN-541	POTENTIOMETER 500,000 Ω
VS1, VS2	SN-561	SOCKET
TS1	AM-2162	TERMINAL STRIP
TS2	AM-2163	" "
TS3	SN-571	" "
TS4	SN-611	" "

WD-210 - SCHEMATIC
ASSOCIATED DRAWING

AM-170
NS AMPLIFIER
WIRING DIAGRAM

INTERNATIONAL PROJECTOR CORPORATION
90 GOLD STREET NEW YORK

DR. RS CHK. CRL APP'D

WD-211

Printed in U.S.A.

1. DESCRIPTION - The AM-1001 is an AC operated chassis type, two stage plus phase inverter, negative feedback, push-pull output power amplifier designed for use in moving picture sound systems. It mounts in the AM-2023 cabinet and is furnished with two terminal strips on extension cable forms for external connections. An adjustable warping circuit is provided in the feedback loop to vary the high and low frequency response as may be required.

2. CHARACTERISTICS -

Gain	60 DB max.
Volume Control	Continuously adjustable (12 DB) - screwdriver adjustment.
Impedance.	Input (source) 10,000 ohms Output (load) Refer to Section 3.2 (Transformer taps 12 and 24 ohms)
Power Output	15 Watts, 34 DB; 41.8 DBM.
Frequency Response	Refer to Section 3.8 and Dwg. SC-21.
Noise Level.	-35 DB; -27.2 DBM
Vacuum Tubes	2 - 6J7, 2 - 6L6G, 1 - 5Z3
Power Supply Required. . . .	105-125V AC, 50-60 cycle, 115 Watts.
Power Supply Furnished . . .	Heater and plate supply for AM-1000 Volume Control Amplifier and AM-1003 Monitor Amplifier.
Dimensions	7-1/2"H x 17"W x 10"D.
Weight	30 lbs.

3. INSTALLATION INSTRUCTIONS

3.1 Power Transformer Connection.

Average Line Voltage	Connect to T_2 Tap
120 - 130	125 V (Connection as shipped)
110 - 120	115 V
100 - 110	105 V

3.2 Output Transformer Connections - All Systems - For optimum power output with a nominal 12 ohm speaker load the "output" wire should connect to the "24 ohm" transformer terminal and the "feedback" wire to the "12 ohm" termonal.
Note: Use TJ-403-A Matching Auto-Transformer with 60 watt system when supplied with Voice of the Theatre Speaker System, connected as follows, WH - common, BR - amplifier output, RD - network input.

3.3 Resistor R_3 (2000 ohms) - When only one amplifier operates at a time, this resistor should be strapped out (as shipped). When two amplifiers normally operate in parallel, the strap (Jumper from R_3 to R_8) should be removed in each amplifier to maintain a constant impedance.

3.4 Resistor R_2 (2000 ohms) - When four amplifiers normally operate in parallel, this resistor should be replaced by an SN-1013 Resistor (8000 ohms) to maintain constant impedance. No wiring changes are necessary.

3.5 Strap Between Terminals "RVC 3" and "RVC 4" - When only one amplifier operates at a time, this strap should be connected. When two or more amplifiers operate in parallel, disconnect this strap as the amplifier selector switch, supplied in such cases, makes the necessary connections to these terminals.

3.6 Gain Control - The gain control of each amplifier in the system should have the same setting, and be adjusted to obtain adequate volume level in the specific auditorium in accordance with Equipment Bulletin "AM-101 Volume Control Amplifier". Counter-clockwise rotation increases the volume. The setting should be as low as possible and never in the extreme counter-clockwise position.

3.7 Vacuum Tubes.- The grid leads of the 6J7 Vacuum Tubes, VT_1 and VT_2 , should be wrapped around the tubes in such a manner that the grid caps do not point toward the 6L6 Tubes, VT_3 and VT_4 .

3.8 Warping Circuit Adjustments - The following tabulation shows typical system response for L-2 H-2 strapping (as shipped) and variations that may be obtained, from L-2, H-2, through the use of alternate warping circuit connections.

Issued by
Engineering Department
Printed in U. S. A.

June 18, 1948
Issue #2

3.8 Warping Circuit Adjustments (Cont'd.)

SIMPLEX SYSTEM RESPONSE - L-2, H-2 STRAPPING,
With 20' EW 633 Plastic Microphone Cable (Federal), or 15'
Belden 8401 Cable between front wall and system amplifier*
24 Ohm Tap: 12 Ohm Resistive Load; 12 Ohm F.B.

Cycles	40	70	130	300	500		2K	3K	5K	7K	8K
Response	3.9	3.2	1.8	0.8	0.5		-1.2	-2.5	-6.2	-12.1	-15.9

As Shipped

AVAILABLE DEVIATIONS FROM L-2 - H-2 (Refer to Dwg. SC-21 for Strapping)

LOW						HIGH					
a	4.7	4.7	3.1	1.1	0.3	j	0.8	1.8	4.3	8.0	9.8
L-1	3.8	2.8	1.3	0.4	0.2	k	0.1	0.2	1.1	3.3	5.0
L-2	0	0	0	0	0	H-1	0.9	2.0	4.0	4.1	3.8
b	0.7	-0.2	-0.5	0	0	l	-0.3	-0.9	-2.2	-2.8	-2.6
b-1 (C1 only)	-2.8	-2.1	-1.2	-0.2	0	m	-0.2	-0.6	-1.4	-1.2	-0.6
c	-3.2	-1.7	-0.9	0	0	n	1.0	2.0	2.9	1.3	0.6
d	1.5	2.3	1.6	0.6	0.3	o	0.9	1.6	0.6	-2.1	-2.9
e	0.6	1.1	0.7	0.4	0.2	p	0.7	0.7	-2.0	-5.3	-6.1
f	0.3	2.3	2.5	1.5	0.5	q	0.5	0.2	-3.0	-6.3	-7.0
g	-7.8	-3.0	-0.1	0.9	0.4	H-2	0	0	0	0	0
L-3	-5.7	-3.1	-1.6	-0.1	0	H-2a (C16 only)	0.2	0.2	0.9	1.7	2.4
h	-7.9	-5.3	-3.0	-0.5	-0.2	H-2b (C16 & C18)	0	0	-0.4	-0.8	-1.0
L-4	-9.2	-5.0	-2.3	-0.3	-0.1	H-3	0	-0.3	-1.3	-2.5	-2.8
i	-13.9	-8.7	-4.4	-0.8	-0.3	r	0	-0.9	-3.1	-5.1	-5.7
						H-4	0	-1.4	-4.1	-6.4	-7
* For additional 10' EW633 or 8' Belden 8401 add							-0.1	-0.2	-0.4	-0.6	-0.7

Note: Add deviation values algebraically to L-2 - H-2 to obtain system response for various warping connections. Any LOW end curve may be used with any HIGH end curve. With some combinations there may be interaction (not exceeding 1 DB) between LOW and HIGH curves.

4. OPERATION AND MAINTENANCE

4.1 Dual or Emergency Amplifiers - When two or more amplifiers normally operate in parallel, or emergency amplifier equipment is installed, a selector switch is supplied to disconnect the output, external heater and plate circuits and warping circuit of the inoperative amplifier(s) and connect similar circuits of the operative amplifier(s). Only one warping circuit is used at a time. The input is not disconnected.

4.2 Frequency Response and Power Output Measurements - Recommended test load under all conditions is 12 ohms. Dummy load resistor in network should be connected for this value.

4.3 Plate Meter - Slight movement of the pointer of the plate current meter may be observed before overload. It may occur as much as 8 db before full load and is <u>not an indication</u> of distortion in the output stage but merely of variation in signal strength.

4.4 Vacuum Tube Testing (Plate Meter)

(1) General conditions -

		Meter Readings				
To Test	VT - SW. Pos.	GR 1 & 2	RD 1	RD 2	GR 3 & 4	RD 3 or 4
VT-1 & VT-2	1-2	Good	VT-1 Bad	VT-2 Bad	-	-
VT-3 & VT-4	3-4	-	-	-	Good	Bad See Note

Note: Remove one tube at a time and replace tube giving deflection below "RD 3 or 4".

(2) Border line cases - VT-1 & VT-2 -

		Meter Reading	
To Test	Remove	RD 1	RD 2
VT-1	VT-2	Bad	Good
VT-2	VT-1	Good	Bad

Caution: To avoid disturbances in system, remove tube with grid cap attached. Replace grid cap before reinstalling tube.

(3) Replace 5Z3 Rectifier Tube if reading is below both "GR 1 & 2"and "GR 3 & 4" in the above tests.

ASSOCIATED DRAWINGS

WD-101 SCHEMATIC
WD-113 WIRING DIAGRAM
SC-21 FREQUENCY RESPONSE CHARACTERISTICS

Issued by
Engineering Department
Printed in U. S. A.

June 18, 1948
Issue #2

ALTEC SERVICE CORPORATION
SIMPLEX

AM-1001 AMPLIFIER

WD-101

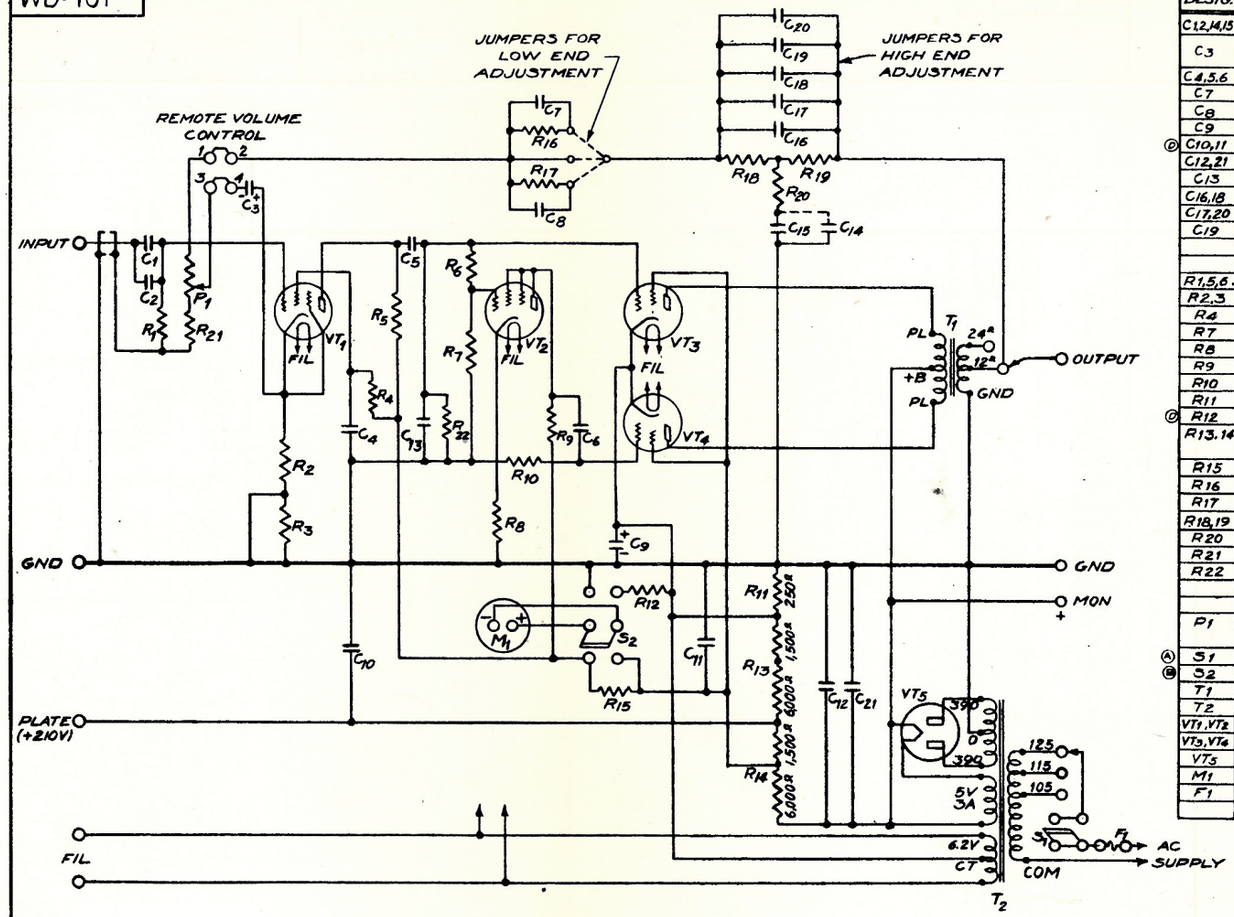

LEGEND:-
DESIGNATES SHIELDED CABLE

DESIG.	PART No.	APPARATUS
C1,2,14,15	SN-515	.005MF-500V CAPACITOR
C3	" 504	25MF-25V " (WITH PAPER TUBE)
C4,5,6	" 514	.05MF-400V CAPACITOR
C7	" 511	.1MF-200V "
C8	" 510	.2MF- " "
C9	" 502	25MF-50V "
(D) C10,11	" 507	4/250 - 20/300 "
C12,21	" 508	4MF-600V "
C13	" 516	.0003MF-500V "
C16,18	" 581	.00075MF " "
C17,20	" 512	.0005MF " "
C19	" 582	.001 MF " "
R1,5,6	" 539	500,000Ω 1 WATT RESISTOR
R2,3	" 1130	2,000Ω " " (WIRE WOUND)
R4	" 517	2 MEG " "
R7	" 521	75,000Ω " "
R8	" 533	2,500Ω " "
R9	" 520	50,000Ω " "
R10	" 580	250,000Ω " "
R11	" 535	250Ω 10 WATT "
(D) R12	" 971	43,500Ω 1 WATT "
R13,14	" 529	7,500Ω 17 WATT " TAPPED AT 1,500Ω
R15	" 536	46Ω 1 WATT RESISTOR (WIRE WOUND)
R16	" 604	75,000Ω 1/2 WATT "
R17	" 526	30,000Ω " "
R18,19	" 528	7,500Ω " "
R20	" 772	500Ω " "
R21	" 613	280Ω " "
R22	" 539	500,000Ω " "
P1	" 583	1720Ω 2 WATT POT. I.R.C. TYPE CPS WITH TAPER "A"
(A) S1	" 608	D.P.S.T. SWITCH
(B) S2	" 988	D.P.D.T. "
T1	" 575	OUTPUT TRANSFORMER
T2	" 576	POWER "
VT1,VT2	" 707	6J7 METAL VACUUM TUBE
VT3,VT4	" 706	6L6G VACUUM TUBE
VT5	" 708	5Z3 VACUUM TUBE
M1	" 556	WESTON D.C. MILLIAMETER MODEL-301
F1	" 549	#702 FUSETRON (2-AMP)

ISSUE
REDRAWN FROM ISSUE #4 WITH THE FOLLOWING CHANGES
(A) SN-608 WAS SN-566
(B) SN-988 WAS SN-565
(C) NOTE 1 REVISED NOTES 2 & 3 ADDED
(D) SUPPLIERS OF CAPACITORS & RESISTORS REMOVED
AH CPa
ISSUE # 5 10-22-41
ADDED CONNECTION SYMBOL "•" AT INTERSECTION OF O. TERMINAL OF T2, GND OF T1 & CHASSIS GROUND.
ISSUE: 6 4-15-46

1. AMPLIFIERS FROM 1289 UP ARE AS SHOWN.
2. (C) SCHEMATIC OF AMPLIERS Nos 151, 152, 162, 207, 210, 221, 227 230, 238, 347, 418, 431, 432, 433, 434, 436, 491, AND FROM 509 TO 1288 ARE AS SHOWN EXCEPT THAT S_1 AND S_2 ARE SN-566 AND SN-565 RESPECTIVELY.
3. REFER TO WD-113 (AM-1001 AMPLIFIER, WIRING DIAGRAM) FOR WIRING CHANGES IN OTHER AMPLIFIERS WHEN IMPROVED OPERATION IS DESIRED.

UNLESS OTHERWISE SPECIFIED TOLERANCES OF ALL FRACT. DIM. TO BE ± 1/64 TOLERANCES OF ALL DECIMAL DIM. TO BE ± .005

SCALE

AM-1001 AMPLIFIER
POWER AMPLIFIER
SCHEMATIC
INTERNATIONAL PROJECTOR CORPORATION
90 GOLD STREET NEW YORK
DR. AH CHK. APP'D
WD-101

ALTEC SERVICE CORPORATION
SIMPLEX

WD-113

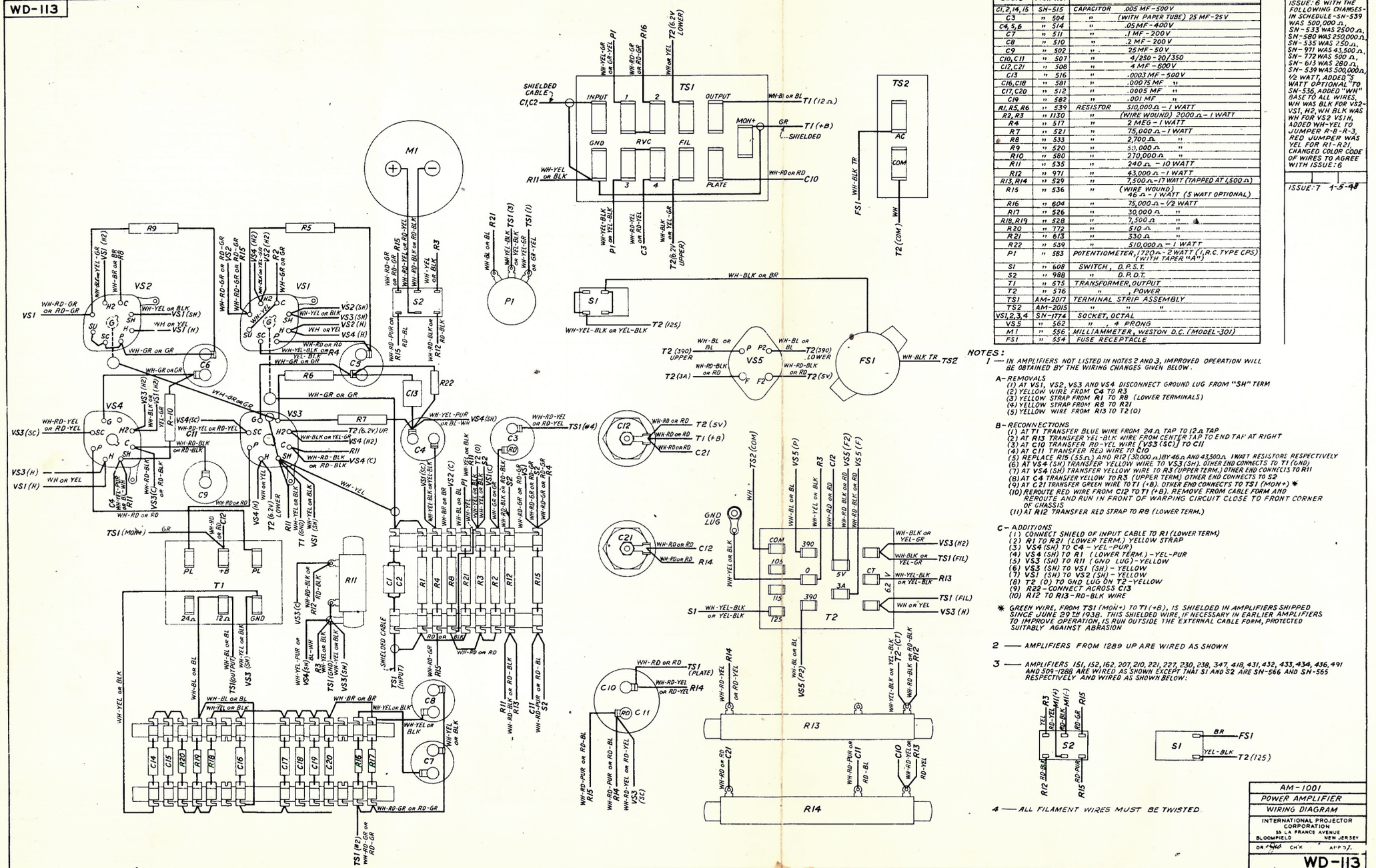
M1
TS1
TS2
INPUT
OUTPUT
GND
RVC
FIL
PLATE
MON+
SHIELDED CABLE C1,C2
T1 (12Ω)
T1 (+B)
SHIELDED
T2 (6.2V LOWER)
T2 (6.2V UPPER)
T2 (COM)
T2 (5V)
T2 (125)
T2 (390) UPPER
T2 (390) LOWER
T2 (3A)
T2 (5V)
P1
S1
S2
VS1
VS2
VS3
VS4
VS5
FS1
R1
R2
R3
R4
R5
R6
R7
R8
R9
R10
R11
R12
R13
R14
R15
R21
R22
C1
C2
C3
C4
C5
C6
C7
C8
C9
C10
C11
C12
C13
C14
C15
C16
C17
C18
C19
C20
C21
T1
T2
PL
+B
GND
24Ω
12Ω
SHIELDED CABLE
TS1 (MON+)
TS1 (PLATE)
TS1 (INPUT)
TS1 (#2)
TS1 (#1)
TS1 (FIL)
TS1 (GND)
TS1 (+B)
TS2 (COM)
VS1 (H)
VS1 (SH)
VS2 (H)
VS2 (SH)
VS3 (H)
VS3 (SH)
VS4 (H)
VS4 (SH)
VS4 (SC)
VS4 (C)
VS5 (P)
VS5 (F)
VS5 (F2)
VS5 (P2)
VS3 (SC)
VS3 (C)
VS1 (SC)
VS1 (C)
VS2 (SC)
VS2 (C)
T2 (6.2V) UP
T2 (6.2V) LOWER
T2 (5V)
T1 (+B)
T2 (C)
T2 (CT)
T2 (GND)
T2 (0)
FS1 TR
WH-BLK TR
TS2
AC
COM
FS1 WH-BLK TR
T2 (COM) WH
GND LUG
COM
390
104
0
5V
3A
6.2 V
115
125
CT
R13
R14
S1 WH-YEL-BLK or YEL-BLK
WH-BLK or YEL-GR
WH-YEL-BLK or YEL-BLK
WH or YEL
WH-BLK or BR
WH-BL or BL
WH-YEL or BLK
WH-RD-BLK or RD-BLK
WH-RD-GR or RD-GR
WH-RD-YEL or RD-YEL
WH-RD-PUR or RD-BL
WH-BR or BR
WH-GR or GR
WH-YEL-PUR or BL-WH
WH-RD or RD
WH-RD-BLK or RD
WH-RD-GR or RD-GR
WH-RD-YEL or RD-YEL
WH-BL or BL
WH-YEL or BLK
WH-YEL-BLK or YEL-

ALTEC SERVICE CORPORATION
SIMPLEX

AM-1001 AMPLIFIER - SPECIAL

ISSUE 10·14·40

WD-177

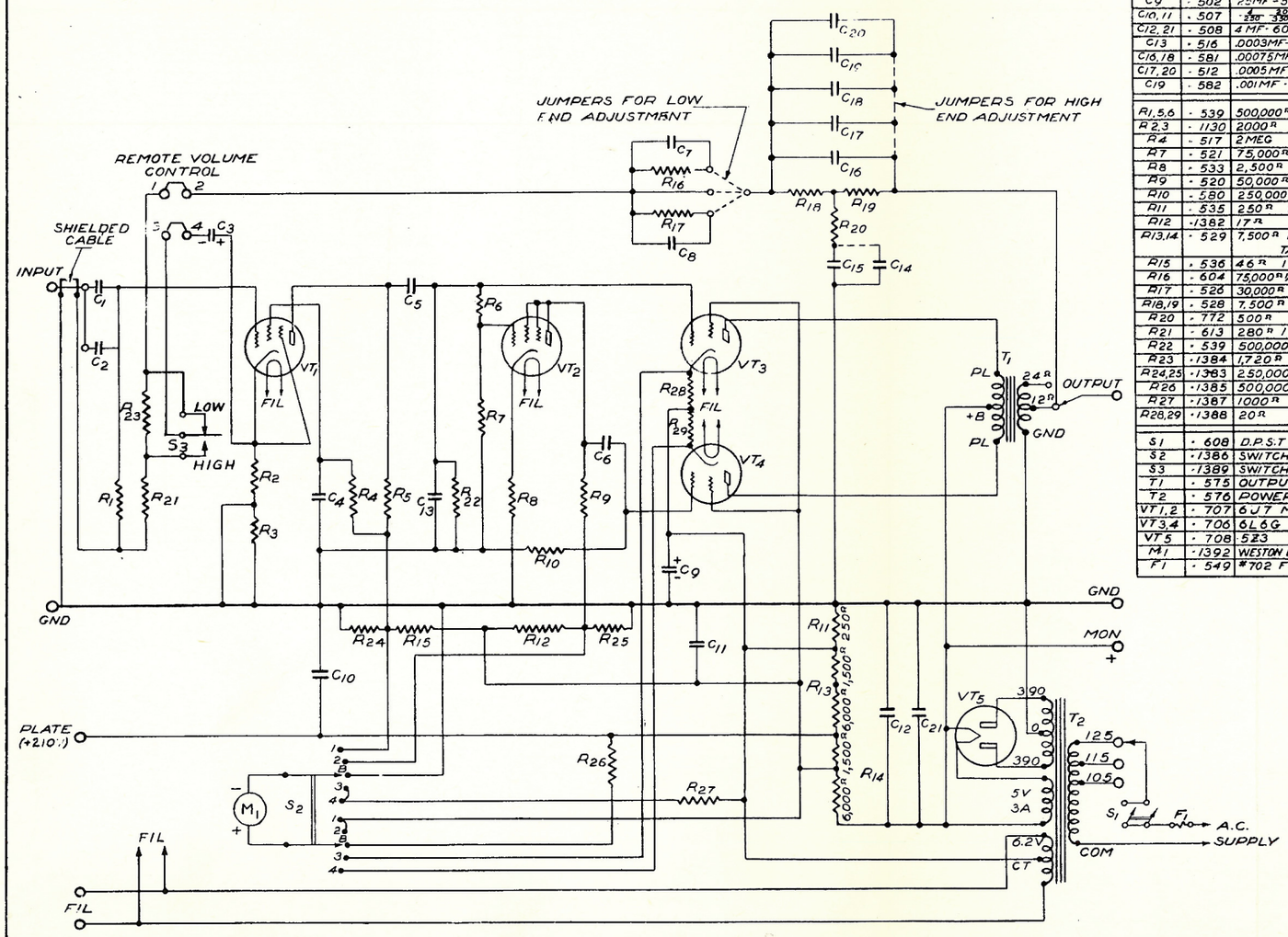

DESIG.	PART No.	APPARATUS
C1,2,14,15	SN-515	.005MF-500V CAPACITOR
C3	504	25MF- 25V " (WITH PAPER TUBE)
C4,5,6	514	.05MF-400V CAPACITOR
C7	511	.1MF- 200V "
C8	510	.2MF- " "
C9	502	25MF-50V "
C10,11	507	4/250 20/350 "
C12,21	508	4MF-600V "
C13	516	.0003MF-500V "
C16,18	581	.00075MF- " "
C17,20	512	.0005MF- " "
C19	582	.001MF- " "
R1,5,6	539	500,000Ω 1 WATT RES. 1 RC TYPE BT-1
R2,3	1130	2000Ω " " " " BW-1
R4	517	2MEG " " " " BT-1
R7	521	75,000Ω " " " " "
R8	533	2,500Ω " " " " "
R9	520	50,000Ω " " " " "
R10	580	250,000Ω " " " " "
R11	535	250Ω 10 WATT " " " MW-2
R12	1382	17Ω 1 WATT " " " BW-1
R13,14	529	7,500Ω 17 WATT " " " MW-5 TAPPED AT 1,500Ω
R15	536	46Ω 1 WATT RES. 1 RC TYPE BW-1
R16	604	75,000Ω 1/2 WATT " " " BT-1/2
R17	526	30,000Ω " " " " "
R18,19	528	7,500Ω " " " " "
R20	772	500Ω " " " " "
R21	613	280Ω 1 WATT " " " BT-1
R22	539	500,000Ω " " " " "
R23	1384	1,720Ω " " " " "
R24,25	1383	250,000Ω " " " " "
R26	1385	500,000Ω " " " " "
R27	1387	1000Ω " " " " BW-1
R28,29	1388	20Ω " " " " BW-1
S1	608	D.P.S.T. SWITCH
S2	1386	SWITCH, SELECTOR
S3	1389	SWITCH, MIDGET JACK
T1	575	OUTPUT TRANSFORMER
T2	576	POWER TRANSFORMER
VT1,2	707	6J7 METAL VACUUM TUBE
VT3,4	706	6L6G VACUUM TUBE
VT5	708	5Z3 VACUUM TUBE
M1	1392	WESTON D.C. MILLIAMETER MODEL-301
F1	549	#702 FUSETRON (2-AMP)

AM-1001 AMPLIFIER
INDIVIDUAL TUBE TESTING
SCHEMATIC
INTERNATIONAL PROJECTOR CORPORATION
90 GOLD STREET NEW YORK
DR. AH CHK CFR APP'D
WD-177

40.03

ALTEC SERVICE CORPORATION

AM-1001 AMPLIFIER - SPECIAL

SIMPLEX

WD-178

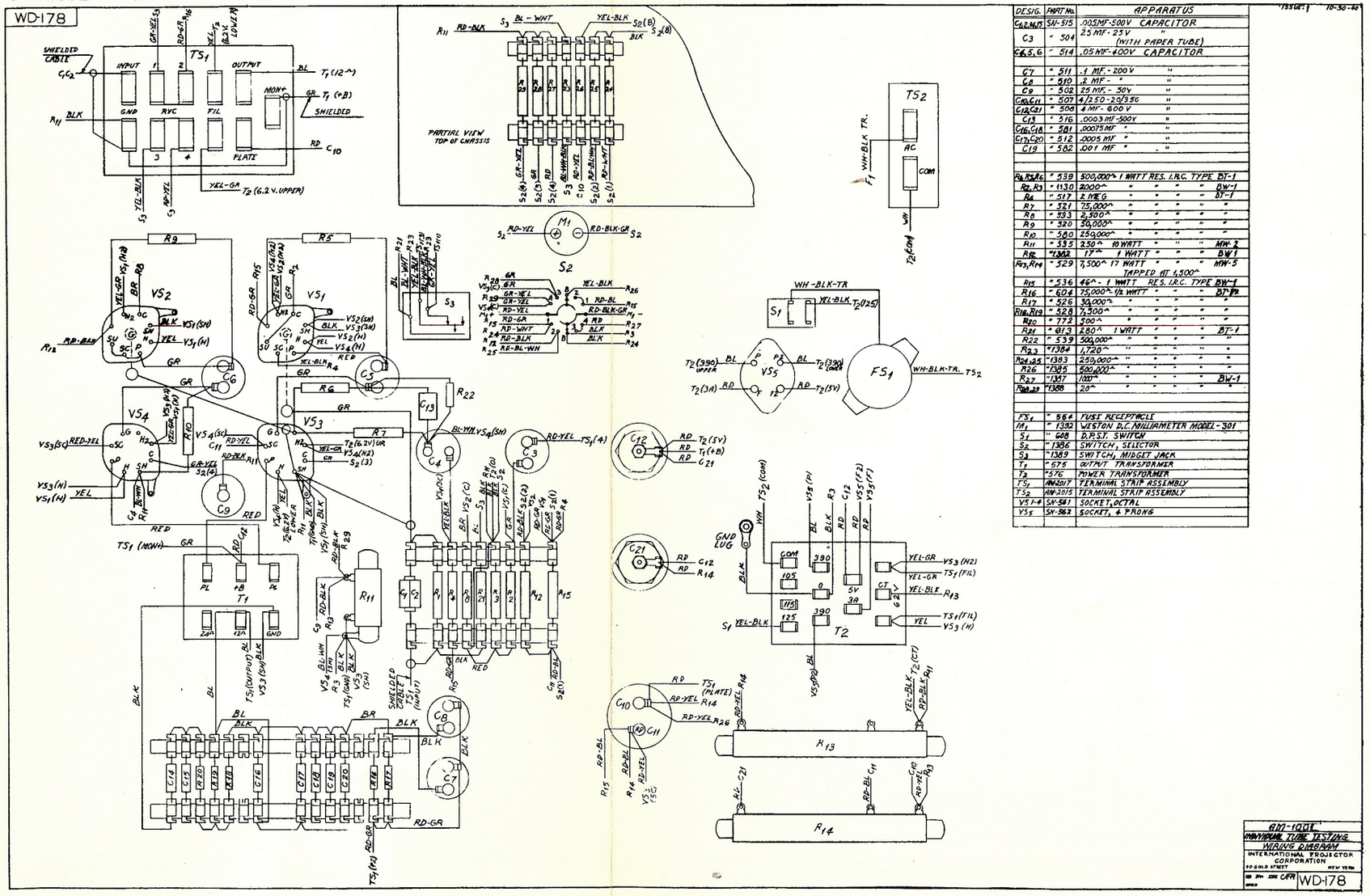

1. CHARACTERISTICS - COMPONENTS - DRAWINGS.

Type - Chassis Type. Single stage push pull.
Gain - 16 db
Output - 6 watts
Input Impedance - 50 ohms
Output Impedance- 50 ohms
Vacuum Tubes - One 6N7
Power Supply - Heater & Plate supply obtained from AM-1001 Amp.
Dimensions - 4½"H x 3"W x 7"D
Weight - 4½ lbs
Schematic & Wiring - WD-141

2. DESCRIPTION.

The AM-1003 is used as a bridging amplifier across the input of the loudspeaker network to provide added power for the monitor loudspeaker. Since it draws practically no power, the full output of the amplifiers is available for the stage speakers. It may also be used to drive auxiliary speakers and hearing aid attachments.

3. INSTALLATION.

As a monitor amplifier, the AM-1003 should be plugged into the socket on the chassis of the loudspeaker network and the two screws furnished, threaded into the tapped holes in the chassis and tightened.

NOTE:- External wires should be connected to the "Fil" and "Plate" terminals of the network per the system wiring diagram. These three wires are the heater and plate supply for the AM-1003. Refer to Equipment Bulletin LU-1018 Monitor Unit for connections to monitor loud speaker.

4. OPERATION.

Set the monitor amplifier switch on the network chassis in "ON" position, turn on the AM-1001 amplifier and the monitor amplifier is ready for operation. Adjust the monitor speaker volume control on the network panel as required.

5. EMERGENCY.

If the amplifier becomes inoperative, set the monitor amplifier switch in "OFF" position. The amplifier is disconnected and the monitor loudspeaker connected across the network input through the monitor volume control. Volume is therefore controlled in the same way as when the amplifier is used.

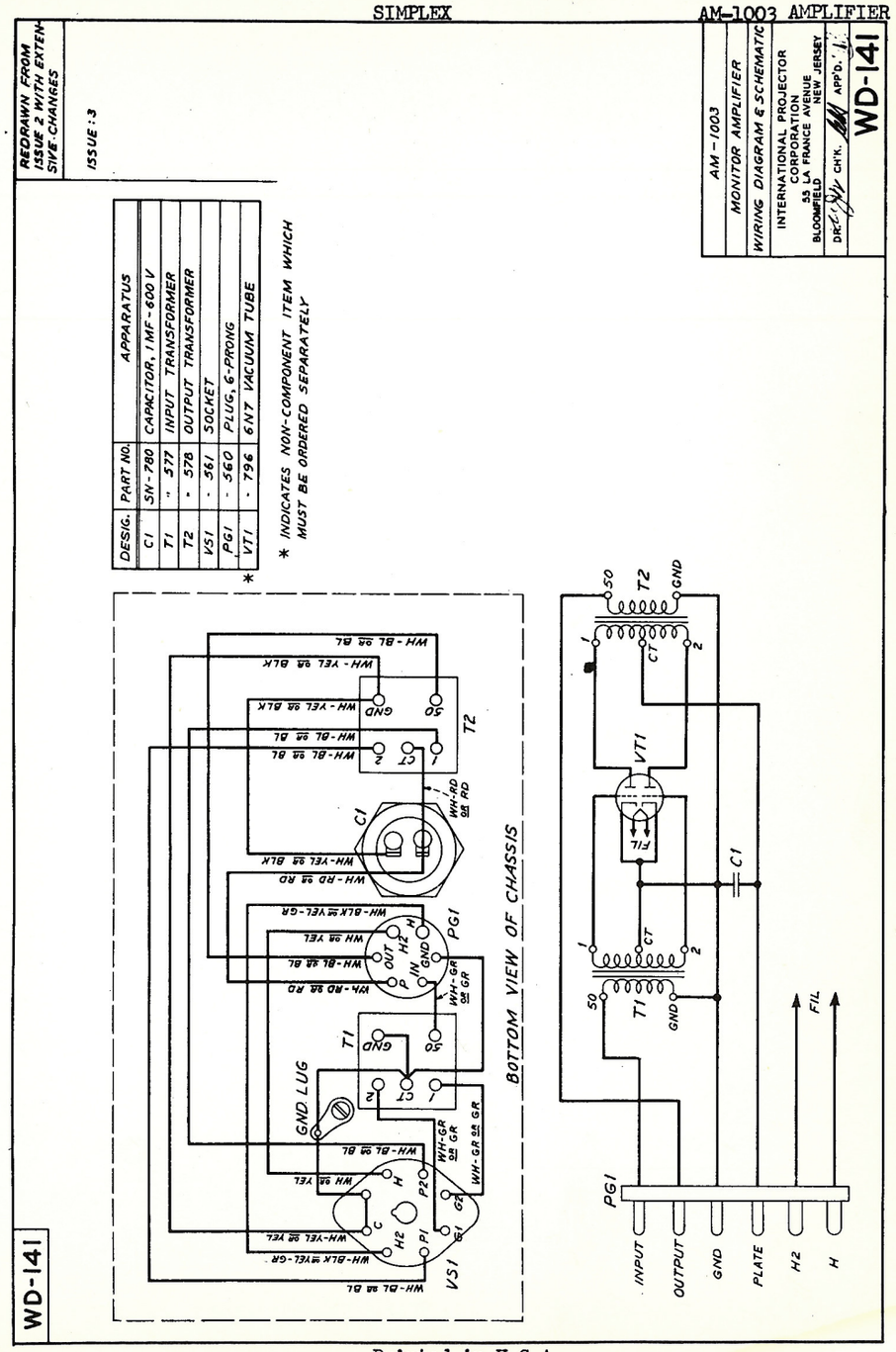
REDRAWN FROM ISSUE 2 WITH EXTENSIVE CHANGES
ISSUE : 3
AM-1003
MONITOR AMPLIFIER
WIRING DIAGRAM & SCHEMATIC
INTERNATIONAL PROJECTOR CORPORATION
53 LA FRANCE AVENUE BLOOMFIELD NEW JERSEY
DR. CH'K. APP'D.
WD-141
DESIG. PART NO. APPARATUS
C1 SN-780 CAPACITOR, 1 MF - 600 V
T1 " 577 INPUT TRANSFORMER
T2 - 578 OUTPUT TRANSFORMER
VS1 - 361 SOCKET
PG1 - 560 PLUG, 6-PRONG
VT1 - 796 6N7 VACUUM TUBE
* INDICATES NON-COMPONENT ITEM WHICH MUST BE ORDERED SEPARATELY
BOTTOM VIEW OF CHASSIS
GND LUG
INPUT
OUTPUT
GND
PLATE
H2
H
FIL
WD-141

1. CHARACTERISTICS

Type	- Chassis Type, two stage, Resistance Coupled.
Gain	- 40 db.
Input Impedance	- Two separate Input Stages - (as shipped 250,000 ohms each - one for high level and one for low level input).
Output Impedance	- 12,500 ohms.
Gain Control	- Potentiometer 20 steps - 2 db each.
Vacuum Tubes	- Two or three - 1620 Tubes
Power Supply	- Filter Plate and Filament Supply obtained from AM-1001 Amplifier.
Dimensions	- 7-1/2" high x 17" long x 10" deep.
Weight	- 15 lbs.
Accessories	- Terminal strip on cable form is provided for external connections.
Associated Drawing	- WD-166 Schematic.

2. USE

This amplifier is used as a booster amplifier for N.S. or Announcing. Where high level pickup is used, only one stage of amplification is employed. Where low level pickup is used, two stages of amplification are employed. If a low impedance, low level pickup is connected to N.S. (L) and additional gain is required, VT_1 may be added and the input impedance changed to obtain a match as described on associated drawing WD-166.

To increase the gain approximately 10 db, add a 10 mf condenser across R_2. If this is done then HF losses occasioned by the use of concealed cable instead of coaxial cable and/or N.S. switch should be corrected by condensers across C_7.

3. INSTALLATION

The AM-1009 should be installed in the AM-2023 Cabinet in the location shown on the system conduit layout drawing. Connections should be made to the terminal strip per the system wiring diagram.

4. OPERATION

Set the amplifier plate and filament switch in "ON" position, and the AM-1009 is ready for operation when the power amplifier is turned on. The volume control should be adjusted as required to obtain adequate volume with the auxiliary input in use.

5. MAINTENANCE

A. Vacuum Tubes. Tubes should be tested monthly by substituting a new tube. Tube prongs should make good contact, and should be clean and bright. Careful bending of the socket contacts may be resorted to and the prongs burnished with crocus cloth, if necessary, to provide good contact.

ALTEC SERVICE CORPORATION

SIMPLEX

AM-1009 Amp. Filter

WD-166

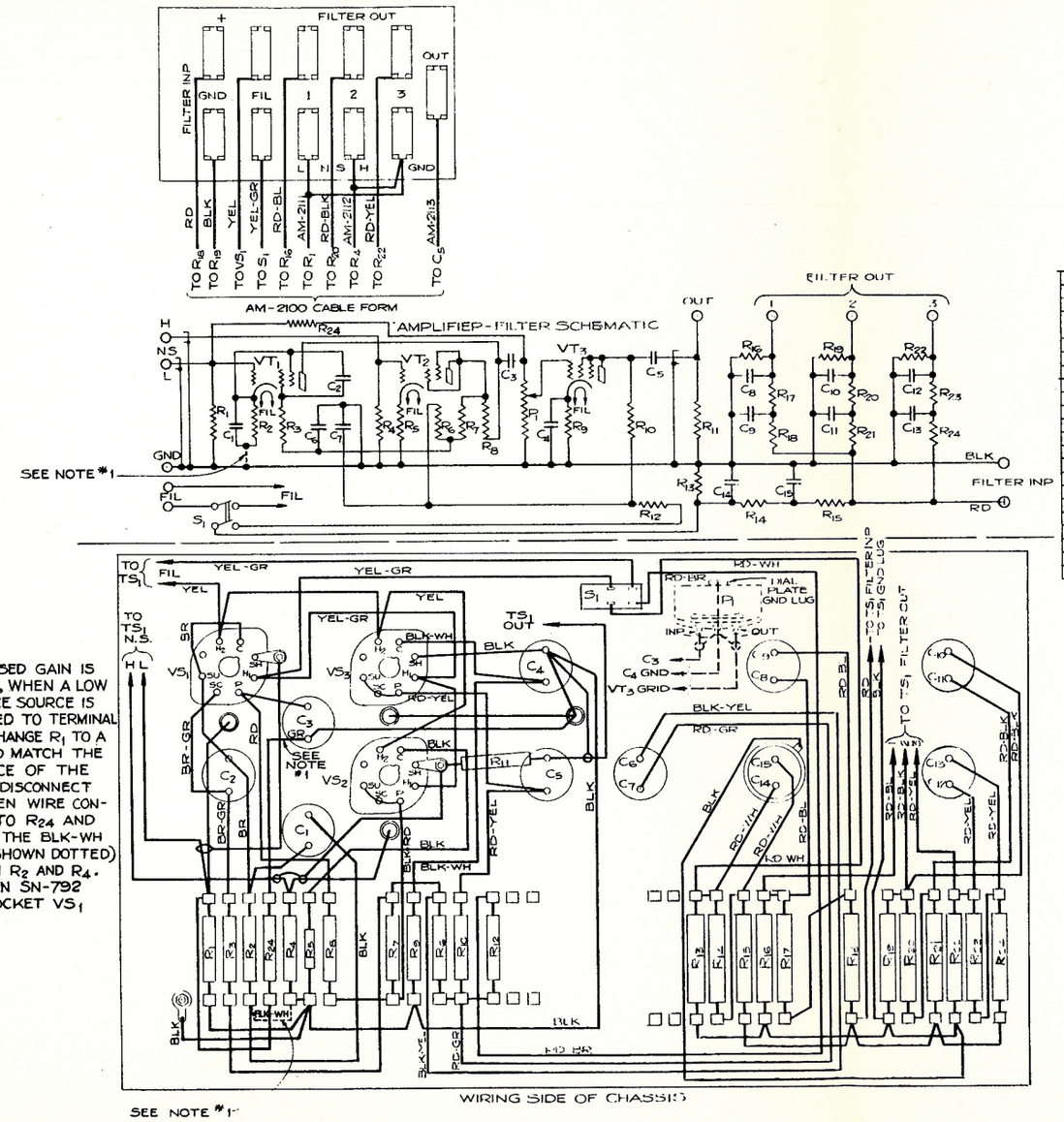

DESIGNATION	PART NO.	APPARATUS
C_1-C_4	SN-504	25MFD 25V. CAPACITOR
C_2-C_3-C_5	SN-514	.05MFD. 400V. "
C_6 TO C_{15}	SN-1322	8-8 MFD. 450V. DUAL CAPAC. (C_6-C_7)(C_8-C_9)(C_{10}-C_{11})(C_{12}-C_{13})(C_{14}-C_{15})
R_2-R_9	SN-1130	2,000 Ω " " " BT-1
R_3-R_{11}-R_{24}	SN-517	2 MEG. " " " "
R_1-R_4	SN-580	250,000 Ω " " " "
R_5	SN-612	10,000 Ω ½ WATT " " BT-½
R_6-R_{10}	SN-111	15,000 Ω 1 WATT " " BT-1
R_7	SN-522	70,000 Ω " " "
R_8	SN-689	55,000 Ω " " "
R_{12}	SN-1052	20,000 Ω " " "
R_{13}-R_{16}-R_{19}-R_{22}	SN-1321	125,000 Ω 2 WATT " " BT-2
R_{14}	SN-1111	15,000 Ω " " " "
R_{15}-R_{18}-R_{21}-R_{24}	SN-1320	25,000 Ω " " " "
R_{17}-R_{20}-R_{23}	SN-1363	10,000 Ω " " " "
S_1	SN-608	D.P.S.T. TOGGLE SWITCH
P_1	SN-1325	500,000 Ω POT. 19-2DB STEPS
VS_1-VS_2-VS_3	SN-561	STANDARD 8 PRONG SOCKET
VT_1-VT_2-VT_3	SN-792	VACUUM TUBE (6J7-B-31)
TS_1	AM-2099	TERMINAL STRIP

NOTE

1-IF INCREASED GAIN IS REQUIRED, WHEN A LOW IMPEDANCE SOURCE IS CONNECTED TO TERMINAL NS(L), CHANGE R_1 TO A VALUE TO MATCH THE IMPEDANCE OF THE SOURCE, DISCONNECT THE GREEN WIRE CONNECTED TO R_{24} AND CONNECT THE BLK-WH STRAP (SHOWN DOTTED) BETWEEN R_2 AND R_4. INSERT AN SN-792 VT IN SOCKET VS_1

"A" REDRAWN FROM ISSUE #1 DUE TO CIRCUIT CHANGE	
A.S.	6-18-40
ISSUE #2	6-20-40
"B" WIRING CHANGED AND NOTE #1 ADDED	
A.S.	1-17-41
ISSUE #3	1-18-41

AM 1009 AMPL-FILTER

WIRING DIAGRAM & SCHEMATIC

INTERNATIONAL PROJECTOR CORPORATION
90 GOLD STREET NEW YORK

DR A.S. CHK. APPD. WD-166

SCALE

IC-2066

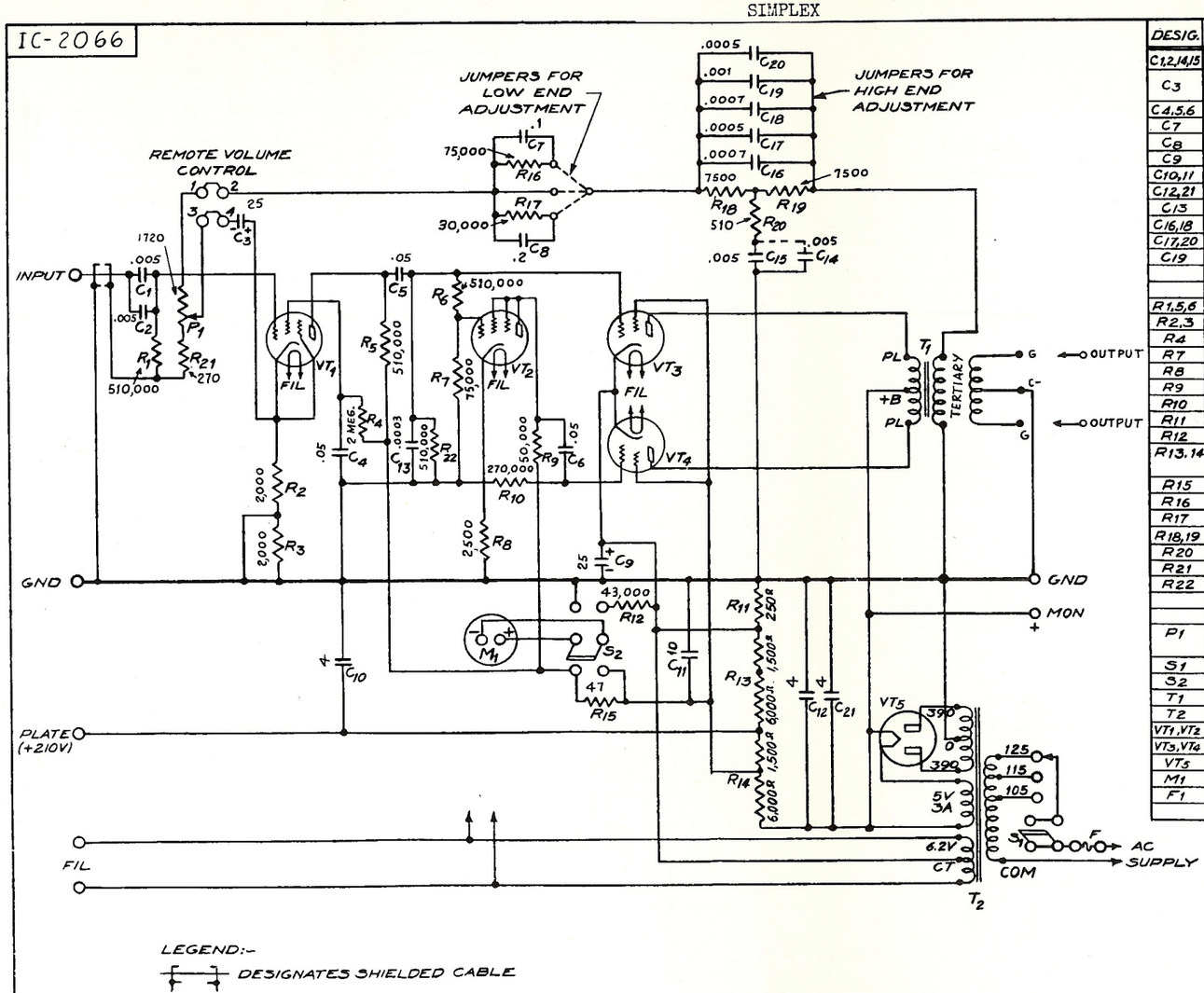

DESIG.	PART No.	APPARATUS
C1,2,14,15	SN-515	.005MF-500V CAPACITOR
C3	" 504	25MF-25V " (WITH PAPER TUBE)
C4,5,6	" 514	.05MF-400V CAPACITOR
C7	" 511	.1MF-200V. "
C8	" 510	.2MF- " "
C9	" 502	25MF-50V "
C10,11	" 507	4/250 - 20/380 "
C12,21	" 508	4MF-600V "
C13	" 516	.0003MF-500V "
C16,18	" 581	.00075MF- " "
C17,20	" 512	.0005MF " "
C19	" 582	.001 MF " "
R1,5,6	" 539	510,000Ω 1 WATT RESISTOR
R2,3	" 1130	2,000Ω " " (WIRE WOUND)
R4	" 517	2 MEG " "
R7	" 521	75,000Ω " "
R8	" 533	2,500Ω " "
R9	" 520	50,000Ω " "
R10	" 580	270,000Ω " "
R11	" 535	250Ω 10 WATT "
R12	" 971	43,000Ω 1 WATT "
R13,14	" 529	7,500Ω 17 WATT " TAPPED AT 1,500Ω
R15	" 536	47Ω 1 WATT RESISTOR (WIRE WOUND)
R16	" 604	75,000Ω 1/2 WATT "
R17	" 526	30,000Ω " "
R18,19	" 528	7,500Ω " "
R20	" 772	510Ω " "
R21	" 613	270Ω " "
R22	" 539	510,000Ω " "
P1	" 583	1720Ω 2 WATT POT. I.R.C. TYPE CPS WITH TAPER "A"
S1	" 608	D.P.S.T. SWITCH.
S2	" 988	D.P.D.T. "
T1	" 1804	OUTPUT TRANSFORMER
T2	" 576	POWER "
VT1,VT2	" 707	6J7 METAL VACUUM TUBE
VT3,VT4	" 706	6L6G VACUUM TUBE
VT5	" 708	5Z3 VACUUM TUBE
M1	" 556	WESTON D.C. MILLIAMETER MODEL-301
F1	" 549	#702 FUSETRON (2-AMP)

ISSUE: 1 3-29-46

REMOVED NOTES AMPLIFIERS FROM 1289 UP ARE AS SHOWN, AND SCHEMATIC OF AMPLIFIERS Nos 151, 152, 162, 207, 210, 221, 227, 230, 238, 347, 418, 431, 432, 433, 434, 436, 491, AND FROM 509 TO 1288 ARE AS SHOWN EXCEPT THAT S1 AND S2 ARE SN-566 AND SN-565 RESPECTIVELY.

REMOVED NOTE "REFER TO WD-1022 (AM-1020 AMPLIFIER, WIRING DIAGRAM) FOR WIRING CHANGE IN OTHER AMPLIFIERS WHEN IMPROVED OPERATION IS DESIRED.

ISSUE: 2 5-21-47

1. RESISTANCE SHOWN IN OHMS UNLESS OTHERWISE SPECIFIED.
2. CAPACITY SHOWN IN MICROFARADS.

UNLESS OTHERWISE SPECIFIED
TOLERANCES OF ALL FRACT. DIM. TO BE ± 1/64
TOLERANCES OF ALL DECIMAL DIM. TO BE ± .005

SCALE

AM-1020 AMPLIFIER
POWER AMPLIFIER
SCHEMATIC
INTERNATIONAL PROJECTOR CORPORATION
90 GOLD STREET NEW YORK
DR NLF CHK. APP'D
IC-2066

ALTEC SERVICE CORPORATION
SIMPLEX

WD-1022

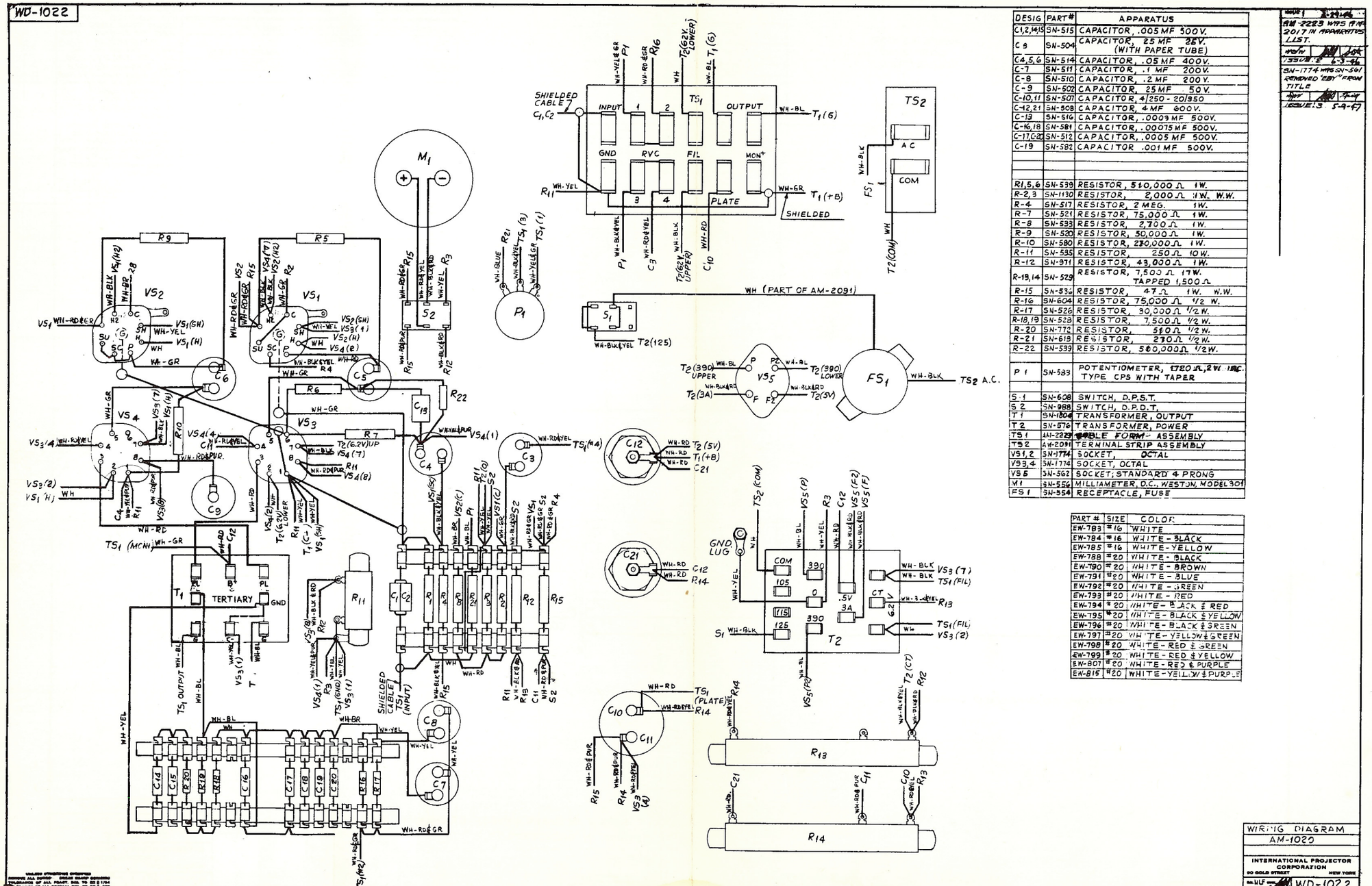

DESIG	PART #	APPARATUS
C1,2,14,15	SN-515	CAPACITOR, .005 MF 500V.
C 3	SN-504	CAPACITOR, 25 MF 25V. (WITH PAPER TUBE)
C4,5,6	SN-514	CAPACITOR, .05 MF 400V.
C-7	SN-511	CAPACITOR, .1 MF 200V.
C-8	SN-510	CAPACITOR, .2 MF 200V.
C-9	SN-502	CAPACITOR, 25 MF 50V.
C-10,11	SN-507	CAPACITOR, 4/250-20/850
C-12,21	SN-508	CAPACITOR, 4 MF 600V.
C-13	SN-516	CAPACITOR, .0003 MF 500V.
C-16,18	SN-581	CAPACITOR, .00075 MF 500V.
C-17,C-20	SN-512	CAPACITOR, .0005 MF 500V.
C-19	SN-582	CAPACITOR .001 MF 500V.
R1,5,6	SN-539	RESISTOR, 510,000 Ω 1W.
R-2,3	SN-1130	RESISTOR, 2,000 Ω 1W. W.W.
R-4	SN-517	RESISTOR, 2 MEG. 1W.
R-7	SN-521	RESISTOR, 75,000 Ω 1W.
R-8	SN-533	RESISTOR, 2,700 Ω 1W.
R-9	SN-520	RESISTOR, 50,000 Ω 1W.
R-10	SN-580	RESISTOR, 210,000 Ω 1W.
R-11	SN-535	RESISTOR, 250 Ω 10W.
R-12	SN-911	RESISTOR, 43,000 Ω 1W.
R-13,14	SN-529	RESISTOR, 7,500 Ω 17W. TAPPED 1,500 Ω
R-15	SN-534	RESISTOR, 47 Ω 1W. W.W.
R-16	SN-604	RESISTOR, 75,000 Ω 1/2 W.
R-17	SN-526	RESISTOR, 30,000 Ω 1/2 W.
R-18,19	SN-528	RESISTOR, 7,500 Ω 1/2 W.
R-20	SN-772	RESISTOR, 510 Ω 1/2 W.
R-21	SN-618	RESISTOR, 270 Ω 1/2 W.
R-22	SN-539	RESISTOR, 510,000 Ω 1/2W.
P 1	SN-583	POTENTIOMETER, 1720 Ω, 2W WIRE TYPE CPS WITH TAPER
S 1	SN-608	SWITCH, D.P.S.T.
S 2	SN-988	SWITCH, D.P.D.T.
T 1	SN-1804	TRANSFORMER, OUTPUT
T 2	SN-576	TRANSFORMER, POWER
TS 1	AM-2239	CABLE FORM - ASSEMBLY
TS 2	AM-2091	TERMINAL STRIP ASSEMBLY
VS 1,2	SN-1774	SOCKET, OCTAL
VS 3,4	SN-1774	SOCKET, OCTAL
VS 5	SN-562	SOCKET; STANDARD 4 PRONG
M 1	SN-556	MILLIAMETER, D.C., WESTON, MODEL 301
FS 1	SN-554	RECEPTACLE, FUSE

PART #	SIZE	COLOR
EW-783	# 16	WHITE
EW-784	# 16	WHITE - BLACK
EW-785	# 16	WHITE - YELLOW
EW-788	# 20	WHITE - BLACK
EW-790	# 20	WHITE - BROWN
EW-791	# 20	WHITE - BLUE
EW-792	# 20	WHITE - GREEN
EW-793	# 20	WHITE - RED
EW-794	# 20	WHITE - BLACK & RED
EW-795	# 20	WHITE - BLACK & YELLOW
EW-796	# 20	WHITE - BLACK & GREEN
EW-797	# 20	WHITE - YELLOW & GREEN
EW-798	# 20	WHITE - RED & GREEN
EW-799	# 20	WHITE - RED & YELLOW
EW-801	# 20	WHITE - RED & PURPLE
EW-815	# 20	WHITE - YELLOW & PURPLE

ISSUE 1 1-14-47
EW-2239 WAS # W 2017 IN APPARATUS LIST.
ISSUE 2 6-3-47
SN-1774 WAS SN-561 REMOVED "EBY" FROM TITLE
ISSUE 3 5-9-47

WIRING DIAGRAM
AM-1020

INTERNATIONAL PROJECTOR CORPORATION
90 GOLD STREET NEW YORK

DR. WLF CHK. APPD. WD-1022

Printed in U.S.A.

1. DESCRIPTION - The AM-1025 is a rack mounted, AC operated, single push-pull stage, power amplifier of recessed panel construction. It is used particularly in Drive-In Theatre Systems.

2. CHARACTERISTICS

Gain	9 DB when substituted for nominal 12 ohm load on AM-1001 Amplifier
Impedance	Input (source) 10 and 20 ohms Input (internal) 46 and 70 ohms Output (load) 10 and 20 ohms Output (internal) 20 and 48 ohms
Power Output	60 Watts, 40 DB; 47.8 DBM
Frequency Response	±1 DB 30-15,000 cps
Noise Level	-27 DB: -19.2 DBM
Vacuum Tubes	2 - 807, 2 - OD3/VR150, 1 - 5R4GY
Power Supply Required	105-125 Volts AC, 50-60 cycle, 150 Watts
Dimensions	8-3/4" H x 19" W
Weight	47 lbs.

3. INSTALLATION INSTRUCTIONS

3.1 General - Remove knock-outs in the ends of the chassis to facilitate cooling.

3.2 Power transformer connections

Average Line Voltage	T-3 Transformer Tap
Over 115	125 V
110 - 115	115 V
100 - 110	105 V

3.3 Output Transformer Connections

Load	T-2 Transformer Tap
14-24 ohms	20 ohms
6-14 ohms	10 ohms

NOTE: Impedance of Simplex Coupling Units and In-A-Car Speakers (2 speakers, volume controls full on) is approximately 1500 ohms at 1000 cps.

4. MODIFICATIONS - R-7 Resistor in amplifiers of early manufacture is a 20 ohm 2 watt resistor. It is recommended that this be changed to 75 ohms 10 watts. When this change is made the bias voltage should be readjusted by moving slider on R-5 Resistor to the top.

Associate Drawing
4179 Schematic

Issued by
Engineering Department
Printed in U. S. A.

July 15, 1949
Issue #1

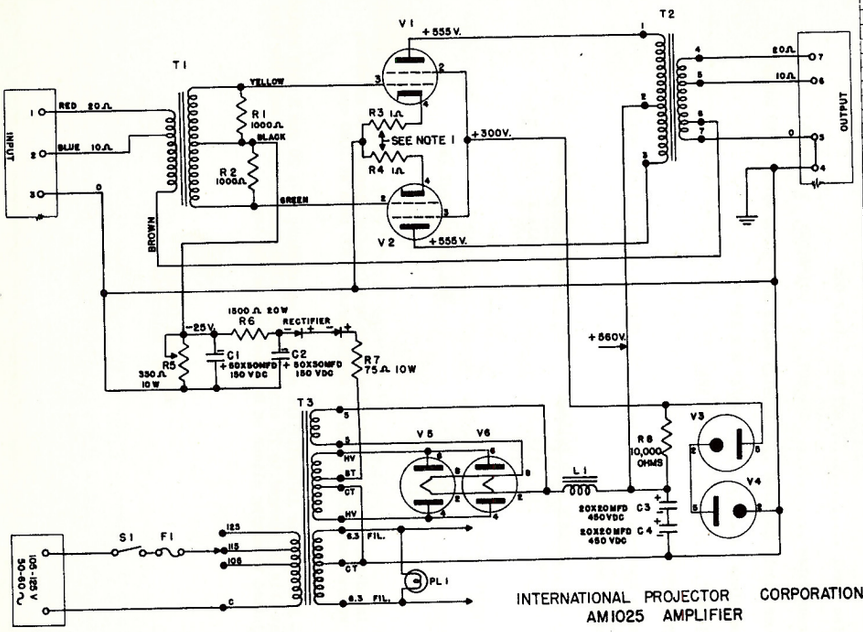

INTERNATIONAL PROJECTOR CORPORATION
AM1025 AMPLIFIER

10661-2A

NOTES:
1- FOR CHECKING TUBES FOR EMISSION OR BALANCE CONNECT AS-1800 METER (0.1 MA RANGE) ACROSS R-3 OR R-4. MULTIPLY METER READING BY 1250 TO OBTAIN ACTUAL CATHODE CURRENT IN MILLIAMPS. (NORMAL METER READING .032-.04 MA; CATHODE CURRENT 40-50MA)

PARTS LIST	
C1,2	50-50MFD. 150V MALLORY FP214
C3,4	20-20MFD. 450V " FP234
R1,2	1,000 OHM 2W IRC BT2
R3,R4	1 OHM 1W (MATCHED TO ±2%) IRC BW1 ±5%
R5	350 OHM 10W OHMITE DIVIDOHM 1017
R6	1500 OHM 20W " BROWN DEVIL
R7	75 OHM. 10W
R8	10,000 OHM 10W OHMITE BROWN DEVIL
T1	ALTEC LANSING 4541
T2	" " 16130
T3	ALTEC LANSING TM609
V1,2	807 RCA OR SYLVANIA
V3,4	OD3/VR150 " "
V5,6	5R4GY " "
L1	ALTEC LANSING TL-521
S1	H&H 1561 S.P.S.T.
F1	3 AMP. LITTEL FUSE 3AG
RECTIFIER 2	100MA. RADIO RECEPTOR 5M1
PL1	G.E. MAZDA NO. 44

OPERATING DATA	
* GAIN	11DB
** POWER OUTPUT AT 2.25%	
TOTAL HARMONICS AT 400 C.P.S.	60 WATTS
FREQUENCY RESPONSE	±1 DB 30-15,000 ~
NOISE LEVEL	-27DB

REFERENCE - 0 DB = .006 WATTS

* FROM 20 Ω INPUT AND WHEN REPLACING A NOMINAL 20 Ω LOAD TERMINATING A SOURCE WHOSE EFFECTIVE INTERNAL IMPEDANCE IS 10 OHMS

** 13 VOLTS ACROSS TERMS. 1 & 3 REQUIRED FOR MAXIMUM POWER OUTPUT

INDICATED VOLTAGES ARE WITH ZERO SIGNAL

ISSUE	APPR'D	DATE	CHANGE
1	[illegible]	2-8-49	
2	[illegible]	5-2-49	REVISED NOTES
2A	[illegible]	6-30-49	R-7 WAS 20Ω 2W, ONE RECTIFIER & NOTE 1 W.N.S.

DR. BY C.P.W. APPR'D

ALTEC LANSING CORPORATION
HOLLYWOOD, CALIF.

AM1025 AMPLIFIER SCHEMATIC

4179

ALTEC SERVICE CORPORATION
SIMPLEX

40.03
AMPLIFIER, AM-1025

PRINTED IN U.S.A.

0. ABSTRACT

0.1 To provide information on the subject of blowing fuses in the AM-1026 Amplifier.

1. GENERAL

1.1 Tests by International Projector Corporation based on reports of the AM-1026 Amplifier blowing fuses indicated that the 807 Tubes became cherry-red and the fuse blew in approximately one hour's operation when the output of the amplifier was shorted, and the audio signal adjusted so that signal peaks were approximately 60 watts.

2. CONCLUSION

2.1 As a result of these tests International Projector Corporation suggests that in case similar symptoms are encountered in the field, a check should be made to see that the load presented to the amplifier is normal.

2.11 The most likely source of trouble will be shorted ramp feed lines.

WD-1085

ISSUE 1 11-17-49
REVERSED PIN NOS 2 & 8 OF V8 & V9
CHANGED TITLE & REF. DWG AME-1026 FROM 30W. REPLACED WD-1085 SCHEMATIC. REF. DWG. WITH WIRING DIA.
E.D.
ISSUE 2 5-17-50

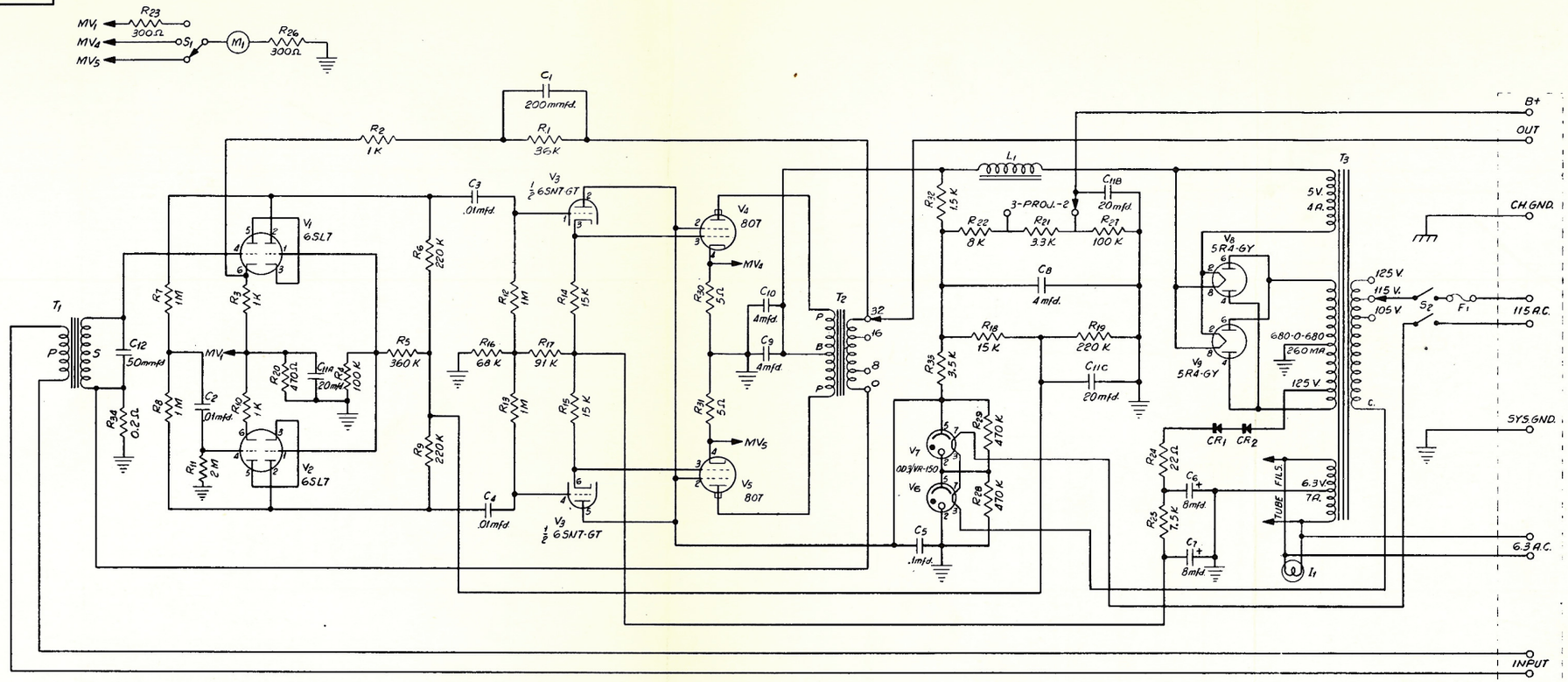

SYMBOL	I.P.C. PT. Nº	DESCRIPTION
R_1	PA-1010	RESISTOR, 36K, 1W., CARBON
R_2	-2051	" , 1K, 1W., "
R_3	-2051	" , 1K, 1W., "
R_4	-2045	" ,100K, 1W., "
R_5	-2073	" ,360K, 1W., "
R_6	-2072	" ,220K, 1W., "
R_7	-2048	" , 1M, 1W., "
R_8	-2048	" , 1M, 1W., "
R_9	-2072	" ,220K, 1W., "
R_{10}	-2051	" , 1K, 1W., "
R_{11}	-2074	" , 2M, 1W., "
R_{12}	-2048	" , 1M, 1W., "
R_{13}	-2048	" , 1M, 1W., "
R_{14}	-2069	" ,15K, 1W., "
R_{15}	-2069	" ,15K, 1W., "
R_{16}	-2070	" ,68K, 1W., "
R_{17}	-2071	" ,91K, 1W., "
R_{18}	-2069	" ,15K, 1W., "
R_{19}	-2072	" ,220K, 1W., "
R_{20}	-2075	" ,470Ω, 1W., "
R_{21}	-2523	" ,3.3K, 2W., "
R_{22}	-2077	" , 8K, 5W., WIREWOUND
R_{23}	-2802	" ,300Ω, 1W., CARBON
R_{24}	-2451	" , 22Ω, 1W., "

SYMBOL	I.P.C. PT. Nº	DESCRIPTION
R_{25}	PA-2067	RESISTOR, 7.5K, 2W., CARBON
R_{26}	-2802	" ,300Ω, 1W., "
R_{27}	-2076	" ,100K, 2W., "
R_{28}	-2046	" ,470K, 1W., "
R_{29}	-2046	" ,470K, 1W., "
R_{30}	-2038	" , 5Ω, 1W., "
R_{31}	-2038	" , 5Ω, 1W., "
R_{32}	-2101	" , 1.5K, 25W., WIREWOUND
R_{33}	-2100	" , 3.5K, 25W., "
R_{34}	-2066	" ,0.2Ω, 2W., "
C_1	-2803	CAPACITOR, 200mmfd, 500V., MOLDED MICA
C_2	-2058	" , .01 mfd., 600V., TUBULAR, PAP
C_3	-2058	" , .01 mfd., 600V., " "
C_4	-2058	" , .01 mfd., 600V., " "
C_5	-2099	" , .1 mfd., 400V., " "
C_6	-2061	" , 8 mfd., 250V., TUBULAR, ELEC.
C_7	-2061	" , 8 mfd., 250V., " "
C_8	-2098	" , 4 mfd., 600V., PAPER, CAN
C_9	-2098	" , 4 mfd., 600V., " "
C_{10}	-2098	" , 4 mfd., 600V., " "
C_{11A}	-2085	CAPACITOR ELECTROLYTIC, 20 mfd., 25 V.
C_{11B}		20 mfd., 450 V.
C_{11C}		20 mfd., 450 V.
C_{12}	-2623	CAPACITOR, 50 mmfd., 500 V., MOLDED MICA

LEGEND: K = x 1000 Ω
M = x 1,000,000 Ω

SYMBOL	I.P.C. PT. Nº	DESCRIPTION
T_1	PB-2082	INPUT TRANSFORMER
T_2	PC-2095	OUTPUT "
T_3	PC-2094	POWER "
L_1	PB-2096	CHOKE
F_1	PA-2455	FUSETRON, 2.5 A.
I_1	PA-2425	DIAL LAMP, 6-8 V.
S_1	-2092	ROTARY SWITCH, 1 POLE, 3 POS.
S_2	-2089	TOGGLE SWITCH, D.P.S.T.
CR_1	-2091	SELENIUM RECTIFIER
CR_2	-2091	" "
M_1	-2088	D.C. MILLIAMMETER
V_1	-1055	VACUUM TUBE, 6SL7-GT
V_2	-1055	" " ,6SL7-GT
V_3	-2607	" " ,6SN7-GT
V_4	-2608	" " ,807
V_5	-2608	" " ,807
V_6	-1053	REGULATOR TUBE, OD3/VR-150
V_7	-1053	" " ,OD3/VR-150
V_8	-2137	VACUUM TUBE, 5R4-GY
V_9	-2137	" " ,5R4-GY

REFERENCE DWGS.
AME-1026 X-L AMPLIFIER, 60 W.
WE-1094 WIRING DIAGRAM

SCALE

SCHEMATIC
60 W. AMPLIFIER

INTERNATIONAL PROJECTOR CORPORATION
99 LA FRANCE AVENUE
BLOOMFIELD NEW JERSEY

DR. E.D. CH'K. APP'D.

PRODUCT CLASS

WD-1085

UNLESS OTHERWISE SPECIFIED
REMOVE ALL BURRS BREAK SHARP CORNERS
TOLERANCES OF ALL FRACT. DIM. TO BE ± 1/64
TOLERANCES OF ALL DECIMAL DIM. TO BE ± .005

Issued by Engineering Department
Printed in U. S. A.

WE-1094

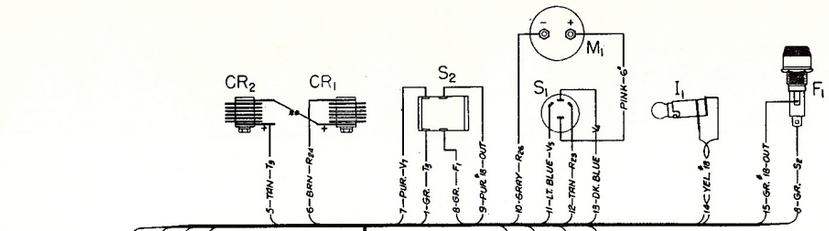

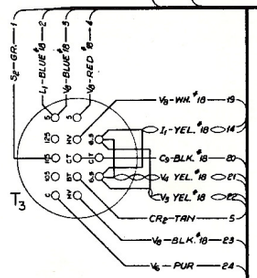

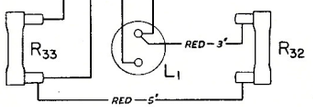

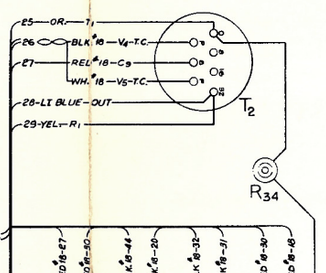

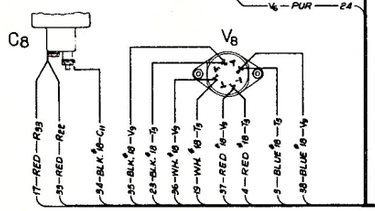

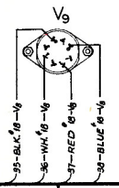

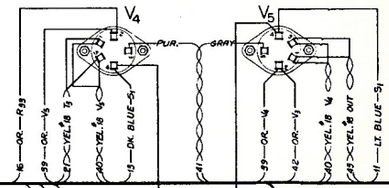

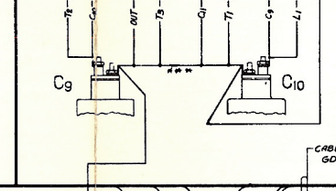

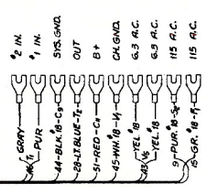

CABLE FORM GD-2049

OUT

NOTE:

ALL WIRES ARE #20 A.W.G., UNLESS OTHERWISE SPECIFIED.

EW-698-SOLID, TINNED COPPER WIRE.

WIRES & SLEEVING ON RESISTOR & CAPACITOR MOUNTING STRIP ARE INCLUDED ON DWG. GC-1986.

COVER LEADS OF OTHER RESISTORS & CAPACITORS WITH EW-949 FIBERGLAS SLEEVING, WHERE NECESSARY.

JUMPERS & REQUIRED WIRE FOR STRAPS ARE TABULATED ON CABLE FORM DWG.

EW-698 SOLID TINNED COPPER WIRE COVERED WITH EW-949 FIBERGLAS SLEEVING.

EW-192—#16 AWG SOLID TINNED COPPER WIRE.

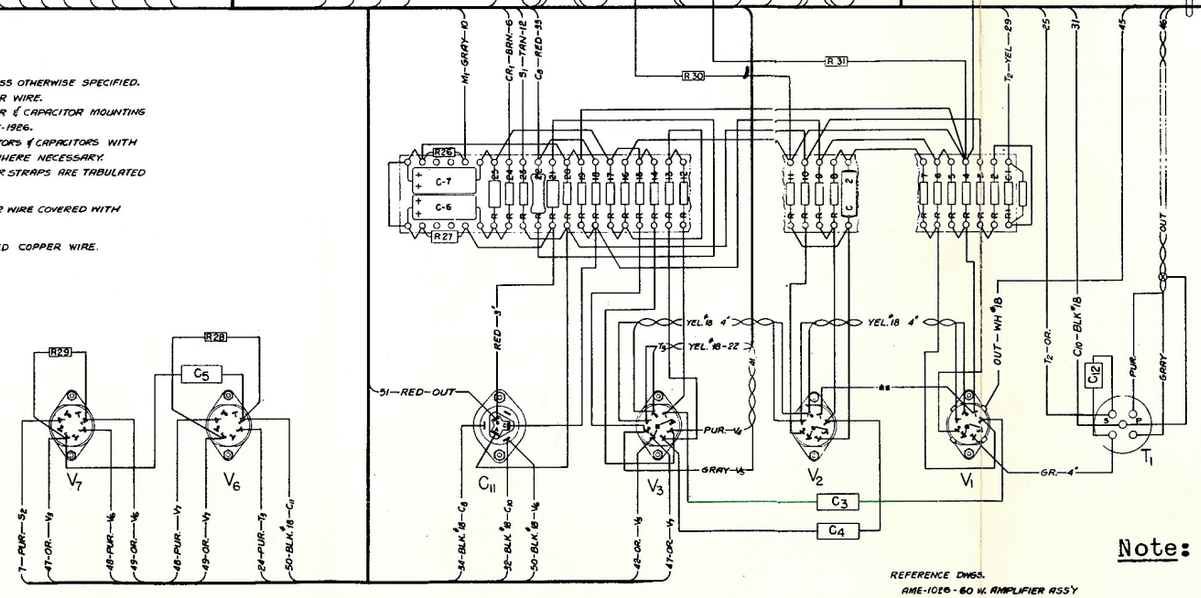

SYMBOL	I.P.C. PT.Nº	DESCRIPTION
R_1	PR-1010	RESISTOR, 36 K., 1 W. CARBON
R_2	2051	" , 1 K , 1 W. , "
R_3	2051	" , 1 K , 1 W. , "
R_4	2045	" , 100 K , 1 W. , "
R_5	2073	" , 360 K , 1 W. , "
R_6	2072	" , 220 K , 1 W. , "
R_7	2048	" , 1 M , 1 W. , "
R_8	2048	" , 1 M , 1 W. , "
R_9	2072	" , 220 K , 1 W. , "
R_{10}	2051	" , 1 K , 1 W. , "
R_{11}	2074	" , 2 M , 1 W. , "
R_{12}	2048	" , 1 M , 1 W. , "
R_{13}	2048	" , 1 M , 1 W. , "
R_{14}	2069	" , 15 K , 1 W. , "
R_{15}	2069	" , 15 K , 1 W. , "
R_{16}	2070	" , 68 K , 1 W. , "
R_{17}	2071	" , 91 K , 1 W. , "
R_{18}	2069	" , 15 K , 1 W. , "
R_{19}	2072	" , 220 K , 1 W. , "
R_{20}	2075	" , 470 Ω , 1 W. , "
R_{21}	2923	" , 3.3 K , 2 W. , "
R_{22}	2077	" , 8 K , 5 W. , WIREWOUND
R_{23}	2802	" , 300 Ω , 1 W. , CARBON
R_{24}	2451	" , 22 Ω , 1 W. , "
R_{25}	2067	" , 7.5 K , 2 W. , "
R_{26}	2802	" , 300 Ω , 1 W. , "
R_{27}	2076	" , 100 K , 2 W. , "
R_{28}	2046	" , 470 K , 1 W. , "
R_{29}	2046	" , 470 K , 1 W. , "
R_{30}	2038	" , 5 Ω , 1 W. , "
R_{31}	2038	" , 5 Ω , 1 W. , "
R_{32}	2101	" , 1.5 K , 25 W. , WIREWOUND
R_{33}	2100	" , 3.5 K , 25 W. , "
R_{34}	2066	" , 0.2 Ω , 2 W. , "

C_1	2803	CAPACITOR, 200 mmfd, 500 V. MOLDED MICA	
C_{1A}	2423	" , 50 mmfd, 500 V., MOLDED MICA	
C_2	2058	" , .01 mfd. , 600 V., TUBULAR, PAPER	
C_3	2058	" , .01 mfd. , 600 V., " , " , "	
C_4	2058	" , .01 mfd. , 600 V., " , " , "	
C_5	2099	" , .1 mfd. , 400 V., " , " , "	
C_6	2061	" , 8 mfd. , 250 V., " , " , ELECT.	
C_7	2061	" , 8 mfd. , 250 V., " , " , "	
C_8	2098	" , 4 mfd. , 600 V., PAPER , CAN	
C_9	2098	" , 4 mfd. , 600 V., " , " , "	
C_{10}	2098	" , 4 mfd. , 600 V., " , " , "	
C_{11A}	2085	CAPACITOR ELECTROLYTIC	20 mfd. , 25 V.
C_{11B}			20 mfd. , 450 V.
C_{11C}			20 mfd. , 450 V.
T_1	PB-2082	INPUT TRANSFORMER	
T_2	PC-2095	OUTPUT "	
T_3	PC-2094	POWER "	
L_1	PB-2096	CHOKE	
F_1	PA-2455	FUSETRON, 2.5 AMP.	
I_1	2425	DIAL LAMP, 6-8 V.	
S_1	2092	ROTARY SWITCH, 1 POLE, 3 POS.	
S_2	2089	TOGGLE SWITCH, D.P.S.T.	
CR_1	2091	SELENIUM RECTIFIER	
CR_2	2091	" "	
M_1	2088	D.C. MILLIAMETER	
V_1	1055	VACUUM TUBE, 6SL7-GT	
V_2	1055	" " , 6SL7-GT	
V_3	2607	" " , 6SN7-GT	
V_4	2608	" " , 807	
V_5	2608	" " , 807	
V_6	1053	REGULATOR TUBE, OD3/VR-150	
V_7	1053	" " , OD3/VR-150	
V_8	2137	VACUUM TUBE , 5R4-GY	
V_9	2137	" " , 5R4-GY	

LEGEND-
K- = x 1000 Ω
M = x 1,000,000 Ω

REFERENCE DWGS.
AME-1028 - 60 W. AMPLIFIER ASS'Y
WD-1085-SCHEMATIC

Note: On "Pur-Gray" shielded leads of cable Connecting to #1 IN and #2 IN:
Change "Pur" to "BLK or Pur"
Change "Gray" to "RD or Gray"

ISSUE-1 11-19-57
CHANGES MADE AS PER ARMY ATTACHED TO CHANGE NO. 2512
C.E. [illegible]
ISSUE-2 E-12-8-60
ADDED FRONT C-11 R-15 WAS 10-15
C.E. [illegible]
ISSUE-3 3-29-61

WIRING DIAGRAM
60 W. AMPLIFIER

INTERNATIONAL PROJECTOR CORPORATION
96 LA FAYETTE AVENUE
HACKENSACK, NEW JERSEY

DR. AB CH. [illegible]

F WE-1094

SUBJECT - OVERHEATING OF 807 VACUUM TUBES

High plate current (at zero signal) and consequent overheating of 807 Vacuum Tubes in the AM-1026 Amplifier have been found due to one or more of the following conditions:

1. Short circuits in output lines - This has occurred in Drive-In theatres.

2. Defective voltage regulator tubes - The 807 screen supply should be close to 300 V.

3. Heater cathode leakage in 6SN7 Vacuum Tubes - The manufacturer recommends type 6SN7GTA only.

4. Leakage of C3 and C4 - Universal replacement was made some time ago with the CD-Gray Tiger type. If these give trouble, headquarters should be notified by special memorandum. Leakage is most easily detected by connecting the DC VTVM across R12 and R13 in turn. There should be no observable deflection of the meter needle.

5. The bias voltage may be below the normal value of -30 volts measured between the 807 grids and ground. This may be due to:

   (a) Incorrect power transformer tap - Use taps as follows:

   Line voltage 122 to 130, use 125 V tap
   Line voltage 113 to 121, use 115 V tap
   Line voltage below 112, use 105 V tap

   (b) Inefficient CR1 and CR2 bias rectifiers - Restore bias voltage to -30 V ± 10% by changing R17 (91,000 ohms) to 75,000 ohms, 1 watt. If there is reason to believe the rectifiers are defective, replacements should be ordered.

Issued by
Engineering Department
Printed in U.S.A.
February 28, 1955
Issue #1

WD-1086

ISSUE 1 10-17-49
ADDED SHIELD BRAID CONNECTION TO T1, 422-A & P-510.
CHANGED INPUT TERMINALS FROM "INPUT" TO "MIN" & "PIN".
ISSUE 2 1-4-50

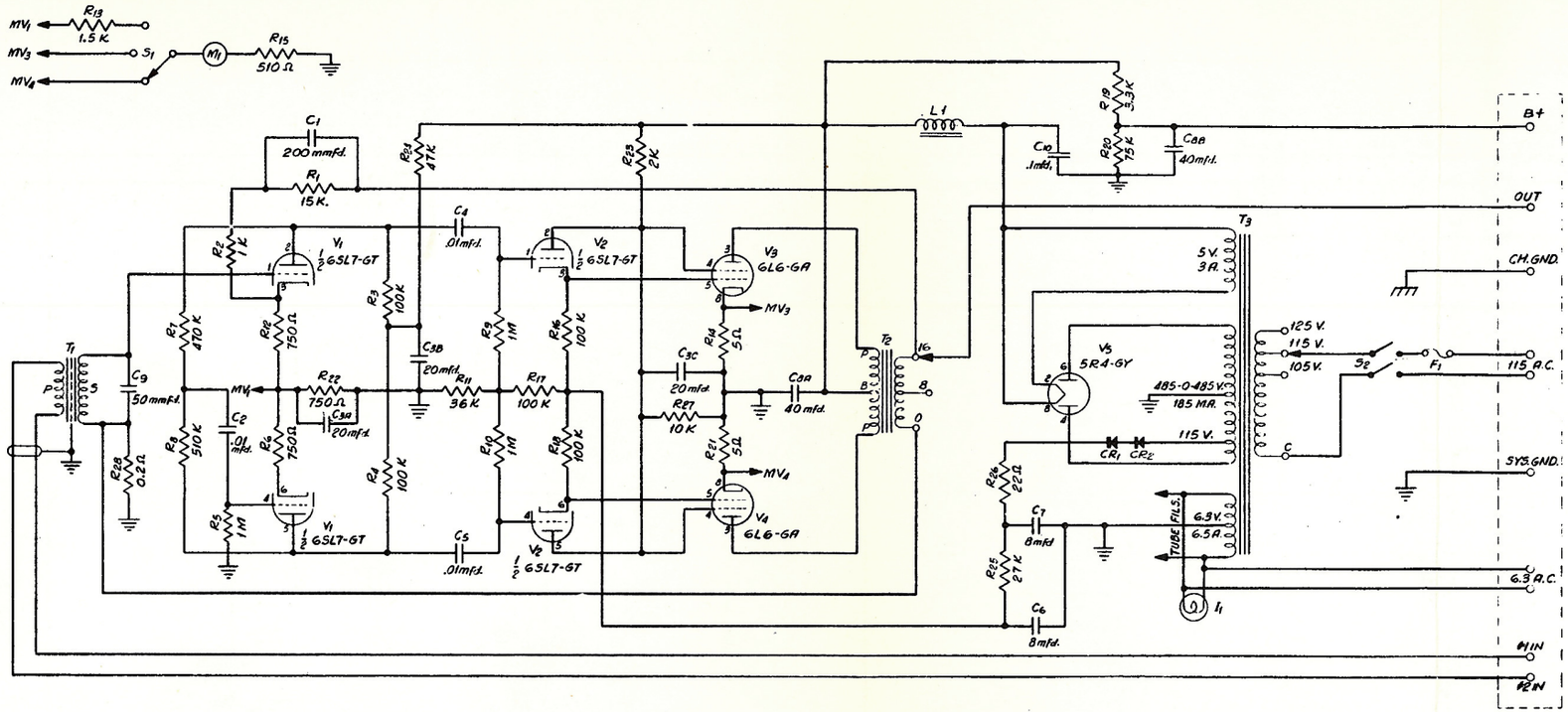

SYMBOL	I.P.C.PT. Nº	DESCRIPTION
R1	PA-2069	RESISTOR, 15 K, 1W., CARBON
R2	-2051	" , 1 K, 1W., "
R3	-2045	" ,100 K, 1W., "
R4	-2045	" ,100 K, 1W., "
R5	-2048	" , 1 M, 1W., "
R6	-1004	" ,750Ω, 1W., "
R7	-2046	" ,470 K, 1W., "
R8	-2047	" ,510 K, 1W., "
R9	-2048	" , 1M, 1W., "
R10	-2048	" , 1M, 1W., "
R11	-1010	" , 36 K, 1W., "
R12	-1004	" ,750Ω, 1W., "
R13	-2125	" , 1.5 K, 1W., "
R14	-2038	" , 5Ω, 1W., "
R15	-2040	" ,510Ω, 1W., "
R16	-2045	" ,100 K, 1W., "
R17	-2045	" ,100 K, 1W., "
R18	-2045	" ,100 K, 1W., "
R19	-2523	" , 3.3 K, 2W., "
R20	-2050	" , 75 K, 2W., "

SYMBOL	I.P.C.PT. Nº	DESCRIPTION
R21	PA-2038	RESISTOR, 5Ω, 1W., CARBON
R22	-1004	" ,750Ω, 1W., "
R23	-2039	" , 2 K, 5W., WIREWOUND
R24	-2043	" , 47 K, 1W., CARBON
R25	-2044	" , 27 K, 1W., "
R26	-2451	" , 22Ω, 1W., "
R27	-2086	" , 10 K, 25W., WIREWOUND
R28	-2066	" ,0.2Ω, 2W., "
C1	-2803	CAPACITOR, 200 mmfd., 500V., MOLDED MICA
C2	-2058	" , .01mfd., 600V., TUB., PAPER
C3A	-2085	CAPACITOR ELECTROLYTIC, 20 mfd., 25 V.
C3B		20 mfd., 450 V.
C3C		20 mfd., 450 V.
C4	-2058	CAPACITOR, .01mfd., 600V., TUB., PAPER
C5	-2058	" , .01mfd., 600V., " , "
C6	-2061	" , 8 mfd., 250V., TUB., ELEC.
C7	-2061	" , 8 mfd., 250V., " "
C8A	-2084	" 40 mfd., 450V.,
C8B		40 mfd., 450V.,
C9	-2623	" ,50 mmfd., 500V., MOLDED MICA
C10	2680	" , .1 mfd., 600 V. TUB., PAPER

SYMBOL	I.P.C.PT. Nº	DESCRIPTION
T1	PB-2082	INPUT TRANSFORMER
T2	-2081	OUTPUT "
T3	PC-2080	POWER "
L1	PB-2083	CHOKE
F1	PA-2499	FUSETRON, 2A.
I1	-2425	DIAL LAMP, 6-8 V.
CR1	-2091	SELENIUM RECTIFIER
CR2	-2091	" "
M1	-2088	D.C. MILLIAMMETER
S1	-2092	ROTARY SWITCH, 1 POLE, 3 POS.
S2	-2089	TOGGLE SWITCH, D.P.S.T.
V1	-1055	VACUUM TUBE, 6SL7-GT
V2	-1055	" " ,6SL7-GT
V3	-2129	" " ,6L6-G
V4	-2129	" " ,6L6-G
V5	-2137	" " ,5R4-GY

LEGEND: K = x 1000 Ω
M = x 1,000,000 Ω

REFERENCE DWGS.
AME-1027-20 W. AMPLIFIER ASS'Y
WE-1092-WIRING DIAGRAM

UNLESS OTHERWISE SPECIFIED
REMOVE ALL BURRS. BREAK SHARP CORNERS
TOLERANCES OF ALL FRACT. DIM. TO BE ± 1/64
TOLERANCES OF ALL DECIMAL DIM. TO BE ± .005

SCALE

SCHEMATIC
20 W. AMPLIFIER

INTERNATIONAL PROJECTOR CORPORATION
85 LA FRANCE AVENUE
BLOOMFIELD NEW JERSEY

DR. AD CH'K. APP'D.

PRODUCT CLASS

WD-1086

Issued by
Engineering Department
Printed in U. S. A.

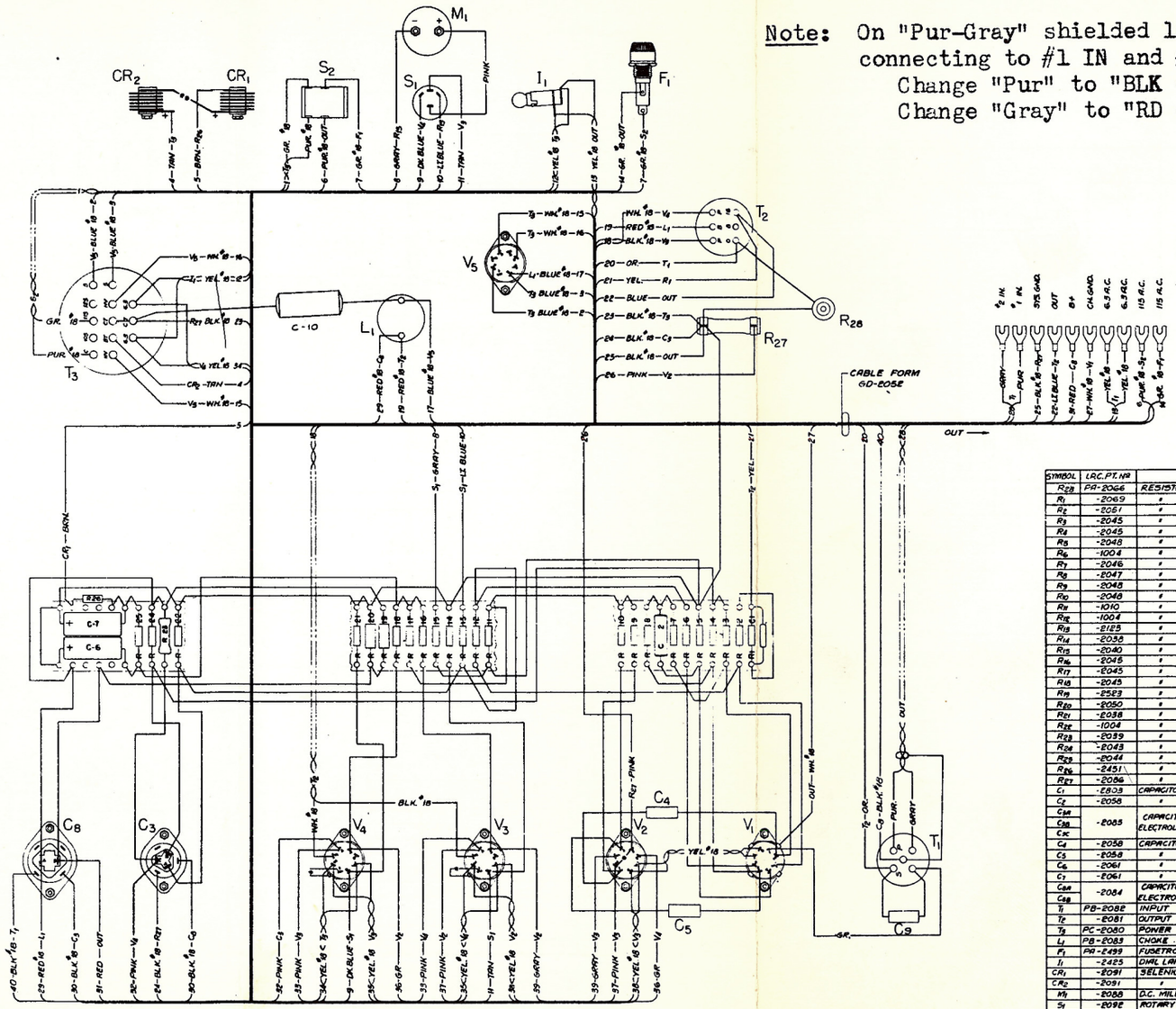

Note: On "Pur-Gray" shielded leads of cable connecting to #1 IN and #2 IN:
Change "Pur" to "BLK or Pur"
Change "Gray" to "RD or Gray"

SYMBOL	LRC PT. NO	DESCRIPTION
R_{28}	PA-2066	RESISTOR, 0.2 Ω, 2W, WIREWOUND
R_1	-2069	" , 15 K, 1W, CARBON
R_2	-2051	" , 1 K, 1W, "
R_3	-2045	" , 100 K, 1W, "
R_4	-2045	" , 100 K, 1W, "
R_5	-2048	" , 1M, 1W, "
R_6	-1004	" , 750 Ω, 1W, "
R_7	-2046	" , 470 K, 1W, "
R_8	-2047	" , 510 K, 1W, "
R_9	-2048	" , 1M, 1W, "
R_{10}	-2048	" , 1M, 1W, "
R_{11}	-1010	" , 36 K, 1W, "
R_{12}	-1004	" , 750 Ω, 1W, "
R_{13}	-2185	" , 1.5 K, 1W, "
R_{14}	-2038	" , 5 Ω, 1W, "
R_{15}	-2040	" , 510 Ω, 1W, "
R_{16}	-2045	" , 100 K, 1W, "
R_{17}	-2045	" , 100 K, 1W, "
R_{18}	-2045	" , 100 K, 1W, "
R_{19}	-2523	" , 8.8 K, 2W, "
R_{20}	-2050	" , 75 K, 2W, "
R_{21}	-2038	" , 5 Ω, 1W, "
R_{22}	-1004	" , 750 Ω, 1W, "
R_{23}	-2039	" , 2 K, 5W, WIREWOUND
R_{24}	-2043	" , 47 K, 1W, CARBON
R_{25}	-2044	" , 27 K, 1W, "
R_{26}	-2451	" , 22 Ω, 1W, "
R_{27}	-2046	" , 10 K, 25W, WIREWOUND
C_1	-2803	CAPACITOR, 200 mmfd., 500 V, MOLDED MICA
C_2	-2058	" , .01 mfd., 600 V, TUBULAR, PAPER
C_{3A}	-2085	CAPACITOR ELECTROLYTIC 20 mfd. 25 V.
C_{3B}		20 mfd. 450 V.
C_{3C}		20 mfd. 450 V.
C_4	-2058	CAPACITOR, .01 mfd., 600 V, TUBULAR, PAPER
C_5	-2058	" , .01 mfd., 600 V, " , "
C_6	-2061	" , .8 mfd., 250 V, " , ELEC.
C_7	-2061	" , .8 mfd., 250 V, " , "
C_{8A}	-2084	CAPACITOR ELECTROLYTIC 40 mfd., 450 V.
C_{8B}		40 mfd., 450 V.
T_1	PB-2082	INPUT TRANSFORMER
T_2	-2081	OUTPUT "
T_3	PC-2080	POWER "
L_1	PB-2083	CHOKE
F_1	PA-2499	FUSETRON, 2 AMP.
I_1	-2425	DIAL LAMP, 6-8 V.
CR_1	-2091	SELENIUM RECTIFIER
CR_2	-2091	" "
M_1	-2058	D.C. MILLIAMMETER
S_1	-2092	ROTARY SWITCH, 1 POLE, 3 POS.
S_2	-2089	TOGGLE SWITCH, D.P.S.T.
V_1	-1055	VACUUM TUBE, 6SL7-GT
V_2	-1056	" " , 6SL7-GT
V_3	-2129	" " , 6L6-G
V_4	-2129	" " , 6L6-G
V_5	-2137	" " , 5R4-GY
C_8	-2823	CAPACITOR, 50 mmfd., 500 V, MOLDED MICA
C_{10}	-2800	" , .1 mfd., 600 V, TUBULAR, PAPER

ALL WIRES ARE #20 A.W.G., UNLESS OTHERWISE SPECIFIED.
*EW-692 - SOLID TINNED COPPER WIRE
JUMPER & STRAP LENGTHS INCLUDED ON CABLE FORM DWG.
WIRES ON RESISTOR & CAPACITOR STRIP ARE INCLUDED ON DWG. GC-1925
COVER LEADS OF RESISTORS & CAPACITORS WITH EW-949 FIBERGLAS SLEEVING WHERE NECESSARY.
**EW-692 WIRE COVERED WITH EW-949 SLEEVING.

LEGEND:
K = x 1000 Ω
M = x 1,000,000 Ω

REFERENCE DWGS.
AME 1027-20 W. AMPLIFIER ASS'Y
VID-1086-SCHEMATIC

WIRING DIAGRAM
20 W. AMPLIFIER
INTERNATIONAL PROJECTOR CORPORATION
F WE-1092

WC-1089

ISSUE / 1-11-50

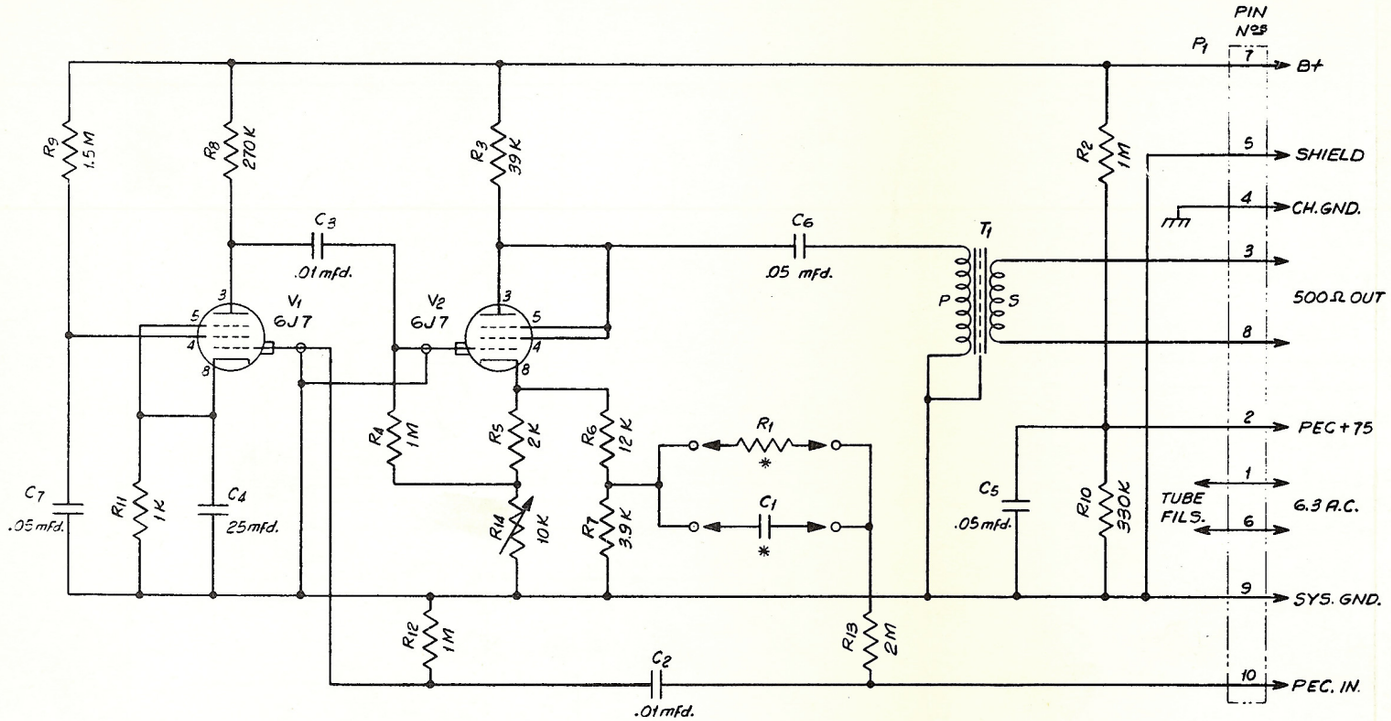

SYMBOL	I.P.C. PT. Nº	DESCRIPTION
* R1	PA-2047	RESISTOR, 510 K, 1 W, CARBON
R1	-2074	" , 2 M, 1 W, "
R1	-2639	" , 3.9 M, 1 W, "
R2	-2048	" , 1 M, 1 W, "
R3	-2054	" , 39 K, 1 W, "
R4	-2048	" , 1 M, 1 W, "
R5	-2052	" , 2 K, 1 W, "
R6	-2053	" , 12 K, 1 W, "
R7	-1007	" , 3.9 K, 1 W, "
R8	-2055	" , 270 K, 1 W, "
R9	-2057	" , 1.5 M, 1 W, "
R10	-2521	" , 330 K, 1 W, "
R11	-2051	" , 1 K, 1 W, "
R12	-2048	" , 1 M, 1 W, "
R13	-2074	" , 2 M, 1 W, "
R14	-2062	" , 10 K, 2 W, POTENTIOMETER

SYMBOL	I.P.C. PT. Nº	DESCRIPTION
* C1	PA-2637	CAPACITOR, .003 mfd., 600 V., TUB, PAPER
C1	-2120	" , .001 mfd., 600 V., " "
C1	-2638	" , .0005 mfd., 600 V., " "
C2	-2058	" , .01 mfd., 600 V., " "
C3	-2058	" , .01 mfd., 600 V., " "
C4	-2617	" , 25 mfd., 25 V., CAN, ELECT.
C5	-2117	" , .05 mfd., 400 V., CAN, PAPER
C6	-2117	" , .05 mfd., 400 V., " "
C7	-2117	" , .05 mfd., 400 V., " "
T1	-2121	OUTPUT TRANSFORMER, 500 Ω
P1	-2063	MALE PANEL CONNECTOR, 10 PRONG
V1	-2118	VACUUM TUBE, 6J7
V2	-2118	" " , 6J7

NOTE:
ALTERNATIVE PARTS R1 & C1 FOR LON FREQUENCY WARPING ARE SUPPLIED SEPARATELY WITH AMPLIFIER.

* IN AMPLIFIER AS SHIPPED.

ASSOCIATED DWGS
GC-1936-ASSEMBLY
WC-1090-WIRING DIAGRAM

UNLESS OTHERWISE SPECIFIED
REMOVE ALL BURRS BREAK SHARP CORNERS
TOLERANCES OF ALL FRACT. DIM. TO BE ± 1/64
TOLERANCES OF ALL DECIMAL DIM. TO BE ± .005

"ALBERENE" NO. 1001 ALTEC CO., N.Y.

SCALE

SCHEMATIC
SOUNDHEAD AMPLIFIER

INTERNATIONAL PROJECTOR CORPORATION
55 LA FRANCE AVENUE
BLOOMFIELD NEW JERSEY

DR. A.D. CH'K. APP'D.

PRODUCT CLASS

WC-1089

Issued by
Engineering Department
Printed in U. S. A.

ALTEC SERVICE CORPORATION
SIMPLEX

WC-1090

DRAWN 1-11-50
ISSUE 1 1-11-50

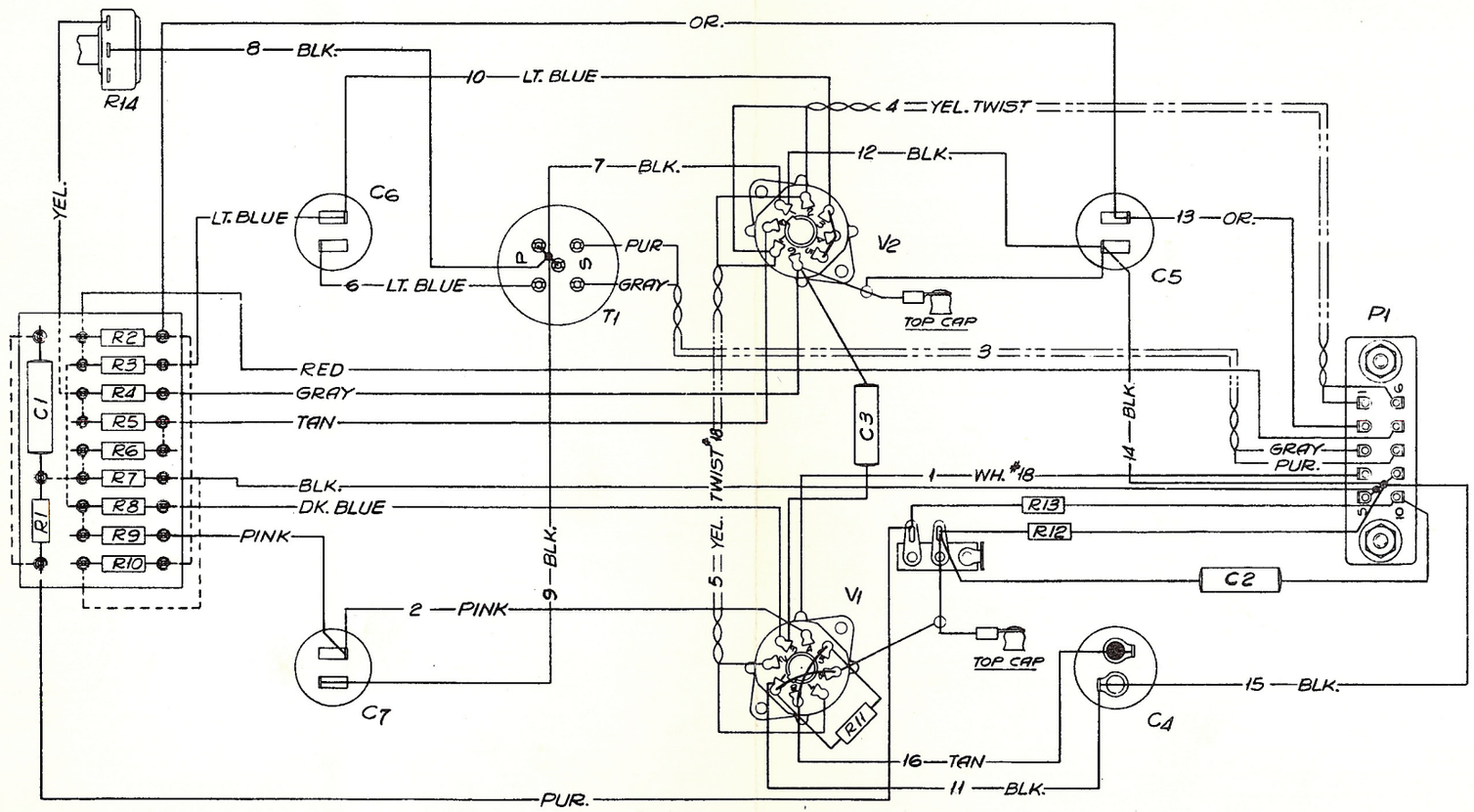

WIRE #	FROM	TO	LENGTH	COLOR	PART #
1	P1/4	V1	3	WHITE	EW-951
2	V1/4	C7	3	PINK	EW-955
3	P1/3&8	T1	4	GRAY PUR TWIST	EW-944
4	V2/2&7	P1/1&6	5½	YEL. TWIST	EW-942
5	V2/2&7	V1/1&7	5½	YEL. TWIST	EW-942
6	C6	T1	3	LT. BLUE	EW-912
7	V2/1	T1	3	BLACK	EW-920
8	R14	T1	4½	BLACK	EW-920
9	T1	C7	3	BLACK	EW-920
10	V2/3	C6	4	LT. BLUE	EW-912
11	V1/1	C4	3	BLACK	EW-920
12	V2/1	C5	3	BLACK	EW-920
13	P1/2	C5	3	ORANGE	EW-956
14	P1/9	C5	3	BLACK	EW-920
15	P1/9	C4	3	BLACK	EW-920
16	V1/8	C4	3	TAN	EW-913

	SYMBOL	I.P.C. PT.#	DESCRIPTION
*	R1	PA-2047	RESISTOR, 510K, 1W, CARBON
	R1	PA-2074	" , 2M, 1W, "
	R1	PA-2639	" , 3.9M, 1W, "
	R2	PA-2048	" , 1M, 1W, "
	R3	PA-2054	" , 390K, 1W, "
	R4	PA-2048	" , 1M, 1W, "
	R5	PA-2052	" , 2K, 1W, "
	R6	PA-2053	" , 12K, 1W, "
	R7	PA-1007	" , 3.9K, 1W, "
	R8	PA-2055	" , 27OK, 1W, "
	R9	PA-2057	" , 1.5K, 1W, "
	R10	PA-2521	" , 330K, 1W, "
	R11	PA-2051	" , 1K, 1W, "
	R12	PA-2048	" , 1M, 1W, "
	R13	PA-2074	" , 2M, 1W, "
	R14	PA-2062	" , 10K, 2W, POTENTIOMETER

	SYMBOL	I.P.C. PT.#	DESCRIPTION
*	C1	PA-2637	CAPACITOR, .005 mfd., 600V., TUB., PAPER
	C1	PA-2120	" , .001 mfd., 600V., " "
	C1	PA-2638	" , .0005 mfd., 600V., " "
	C2	PA-2058	" , .01 mfd., 600V., " "
	C3	PA-2058	" , .01 mfd., 600V., " "
	C4	PA-2617	" , .25 mfd., 25V., CAN, ELECT.
	C5	PA-2117	" , .05 mfd., 400V., CAN, PAPER
	C6	PA-[illegible]	" , .05 mfd., 400V., " "
	C7	PA-[illegible]	" , .05 mfd., 400V., " "
	T1	PA-2[illegible]	OUTPUT TRANSFORMER, 500Ω
	P1	PA-206[illegible]	MALE PANEL CONNECTOR, 10 PRONG
	V1	PA-2118	VACUUM TUBE, 6J7
	V2	PA-2118	" " , 6J7

NOTE: ALTERNATIVE PARTS R1 & C1 FOR LOW FREQUENCY WARPING ARE SUPPLIED SEPARATELY WITH AMPLIFIER.

* IN AMPLIFIER AS SHIPPED.

ASSOCIATED DWGS: OC-1936 ASSEMBLY
WC-1099 SCHEMATIC

STRAPS ARE EW-692-#20 SOLID TINNED COPPER WIRE
WIRES ARE #20 AWG, UNLESS OTHERWISE SPECIFIED.
COVER STRAPS & RESISTOR & CAPACITOR LEADS
WITH EW-949, #20 FIBERGLAS SLEEVING.

SCALE ~

WIRING DIAGRAM
P.E.C. AMPLIFIER

INTERNATIONAL PROJECTOR CORPORATION
88 LA FRANCE AVENUE
BLOOMFIELD NEW JERSEY

DR. A.D. CH'K. APP'D.

WC-1090

UNLESS OTHERWISE SPECIFIED
REMOVE ALL BURRS BREAK SHARP CORNERS
TOLERANCES OF ALL FRACT. DIM. TO BE ± 1/64
TOLERANCES OF ALL DECIMAL DIM. TO BE ± .005

PRODUCT CLASS

"ALTEC" REG. U.S. PAT. OFF.

Issued by
Engineering Department
Printed in U.S.A.

WC-1087

ISSUE 1 10-7-57

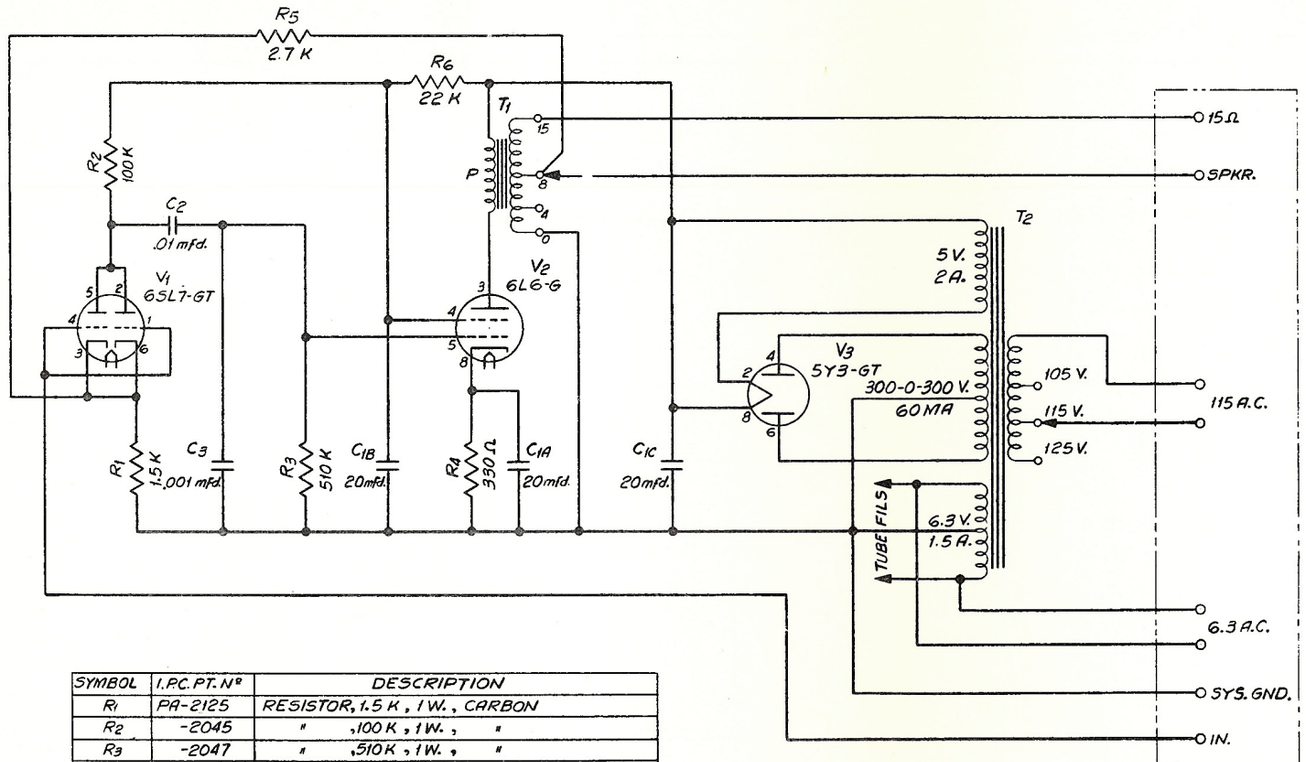

SYMBOL	I.P.C. PT. Nº	DESCRIPTION	
R1	PA-2125	RESISTOR, 1.5 K, 1W., CARBON	
R2	-2045	" ,100 K, 1W., "	
R3	-2047	" ,510 K, 1W., "	
R4	-2128	" ,330 Ω, 2W., "	
R5	-2127	" ,2.7 K, 1W., "	
R6	-2126	" ,22 K, 1W., "	
C1A	-2085	CAPACITOR, ELEC.	20 mfd. 25 V.
C1B			20 mfd. 450 V.
C1C			20 mfd. 450 V.
C2	-2058	CAPACITOR, .01 mfd., 600 V., TUBULAR, PAPER	
C3	-2120	" ,.001 mfd., 600 V., " , "	
T1	PB-2124	OUTPUT TRANSFORMER	
T2	-2123	POWER "	
V1	PA-1055	VACUUM TUBE 6SL7-GT	
V2	-2129	" " 6L6-G	
V3	-2130	" " 5Y3-GT	

LEGEND: K=1000 Ω

REFERENCE DWGS.
AMB-1029-MONITOR AMPLIFIER ASSY.
WC-1039-WIRING DIAGRAM

UNLESS OTHERWISE SPECIFIED
REMOVE ALL BURRS BREAK SHARP CORNERS
TOLERANCES OF ALL FRACT. DIM. TO BE ± 1/64
TOLERANCES OF ALL DECIMAL DIM. TO BE ± .005

"ALTEC" REG. U.S. PAT. OFF., N.Y. 6

SCALE

SCHEMATIC
MONITOR AMPLIFIER

INTERNATIONAL PROJECTOR CORPORATION
85 LA FRANCE AVENUE
BLOOMFIELD NEW JERSEY

DR. A.D. CH'K. APP'D. EC

PRODUCT CLASS F

WC-1087

Issued by
Engineering Department
Printed in U. S. A.

ALTEC SERVICE CORPORATION
SIMPLEX

WC-1093

ISSUE 1 10-17-49

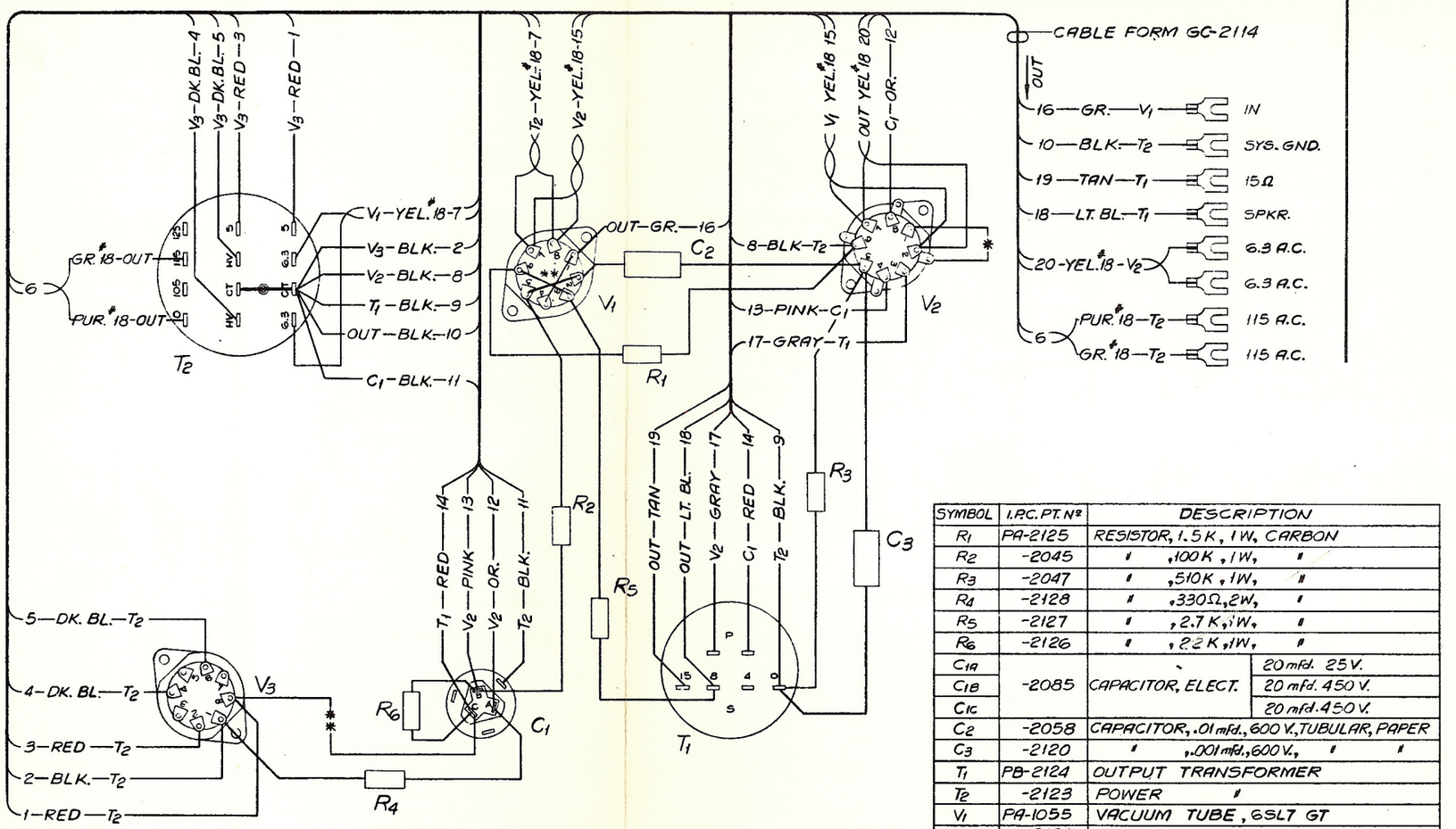

SYMBOL	I.P.C. PT. Nº	DESCRIPTION	
R1	PA-2125	RESISTOR, 1.5 K, 1W, CARBON	
R2	-2045	" ,100 K, 1W, "	
R3	-2047	" ,510 K, 1W, "	
R4	-2128	" ,330Ω, 2W, "	
R5	-2127	" , 2.7 K, 1W, "	
R6	-2126	" , 2.2 K, 1W, "	
C1A	-2085	CAPACITOR, ELECT.	20 mfd. 25 V.
C1B			20 mfd. 450 V.
C1C			20 mfd. 450 V.
C2	-2058	CAPACITOR, .01 mfd., 600 V., TUBULAR, PAPER	
C3	-2120	" ,.001 mfd., 600 V., " "	
T1	PB-2124	OUTPUT TRANSFORMER	
T2	-2123	POWER "	
V1	PA-1055	VACUUM TUBE, 6SL7 GT	
V2	-2129	" " , 6L6 G	
V3	-2130	" " , 5Y3 GT	

ALL WIRES ARE Nº 20 A.W.G., UNLESS OTHERWISE SPECIFIED.
ALL WIRES ARE TABULATED ON CABLE FORM DWG.
COVER LEADS OF RESISTORS & CAPACITORS WITH EW-949, Nº 20 FIBERGLAS SLEEVING.

* EW-692-Nº 20 SOLID TINNED COPPER WIRE.
** EW-692 WIRE COVERED WITH EW-949 SLEEVING.
⊕ EW-192 Nº 16 SOLID TINNED COPPER WIRE. (JUMPER ON T2)

REFERENCE DWGS.
AMB-1029 MON. AMP. ASS'Y.
WC-1087 SCHEMATIC

SCALE

WIRING DIAGRAM
MONITOR AMPLIFIER

INTERNATIONAL PROJECTOR CORPORATION
55 LA FRANCE AVENUE
BLOOMFIELD NEW JERSEY

DR. A.D. CH'K. APP'D.

PRODUCT CLASS

WC-1093

UNLESS OTHERWISE SPECIFIED
REMOVE ALL BURRS BREAK SHARP CORNERS
TOLERANCES OF ALL FRACT. DIM. TO BE ± 1/64
TOLERANCES OF ALL DECIMAL DIM. TO BE ± .005

"ALTEC" REG. U.S. PAT. OFF. U.S.A.

Issued by
Engineering Department
Printed in U.S.A.

1. GENERAL

1.1 The AM-1040 Amplifier used in the X-L25-D and X-L25X-D Drive-In Systems is the Simplex AM-1018 (Altec Lansing 287-W) Amplifier equipped with a TL-216 Input Transformer.

1.2 Until advised to the contrary, the TL-216 Transformer will be shipped separately and should be mounted in the holes already provided in the chassis of the AM-1018 Amplifier and connected to the amplifier as per Altec Lansing Drawing 3741, file 50.03, Amplifier 287-W, in the Altec Lansing bulletins.

1.3 The input of the TL-216 Transformer should be strapped for 14 ohms.

Issued by
Engineering Department
Printed in U.S.A.
April 12, 1950
Issue #1

NS-167

ISSUE: 1 3-5-54

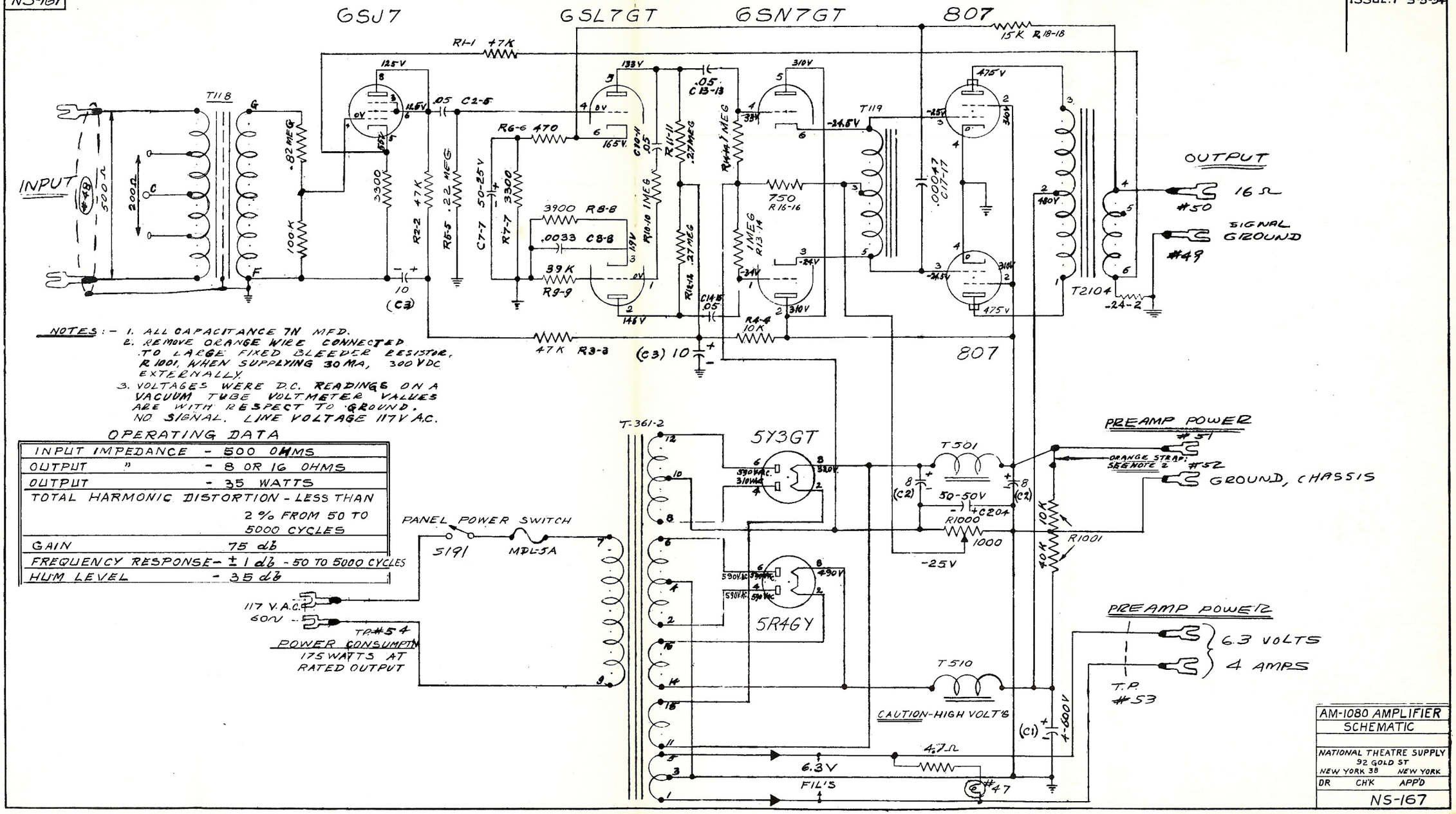

NOTES:-
1. ALL CAPACITANCE IN MFD.
2. REMOVE ORANGE WIRE CONNECTED TO LARGE FIXED BLEEDER RESISTOR, R 1001, WHEN SUPPLYING 30 MA, 300 VDC EXTERNALLY.
3. VOLTAGES WERE D.C. READINGS ON A VACUUM TUBE VOLTMETER VALUES ARE WITH RESPECT TO GROUND. NO SIGNAL. LINE VOLTAGE 117 V A.C.

OPERATING DATA

INPUT IMPEDANCE	- 500 OHMS
OUTPUT "	- 8 OR 16 OHMS
OUTPUT	- 35 WATTS
TOTAL HARMONIC DISTORTION	- LESS THAN 2% FROM 50 TO 5000 CYCLES
GAIN	75 db
FREQUENCY RESPONSE	- ± 1 db - 50 TO 5000 CYCLES
HUM LEVEL	- 35 db

AM-1080 AMPLIFIER SCHEMATIC			
NATIONAL THEATRE SUPPLY 92 GOLD ST NEW YORK 38 NEW YORK			
DR	CH'K	APP'D	
NS-167			

1. DESCRIPTION

1.1 The NTS-1125 Amplifier is a modified Bogen HO-125 Amplifier and is to be used only for Drive-In Theatre Installations with In-Car Speakers.

2. CHARACTERISTICS

2.1 This amplifier delivers its rated power output of 125 watts over a limited frequency range with 5% harmonic distortion and as such will handle a maximum of 500 of these In-Car Speakers.

2.2 National Theatre Supply Headquarters advises that this amplifier is not to be used in regular theatre installations as such use would lead to continual trouble and complaints due to its limited frequency response and high noise level distortion.

Issued by
Engineering Department
Printed in U.S.A.

May 2, 1950
Issue #1

NS-128

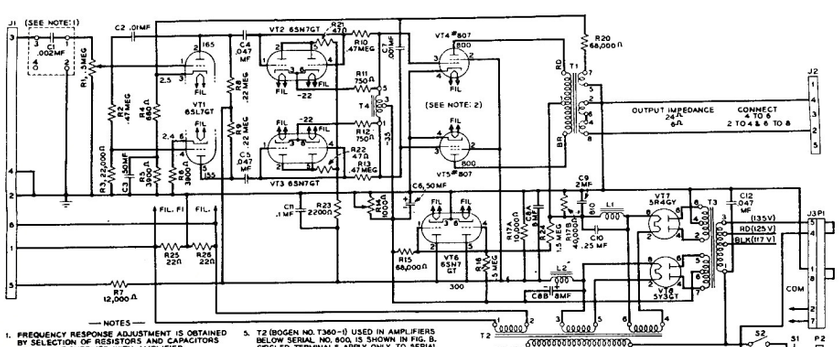

— NOTES —

1. FREQUENCY RESPONSE ADJUSTMENT IS OBTAINED BY SELECTION OF RESISTORS AND CAPACITORS FROM A KIT SUPPLIED WITH AMPLIFIER.
2. ALL VOLTAGE READINGS TAKEN WITH A 20,000 OHMS PER VOLT VOLTMETER AND CONTROLS SET AT ZERO. PLATE VOLTAGE ON VT4 AND VT5 IS 800 VOLTS (NO SIGNAL), 750 VOLTS (50 WATTS), 700 VOLTS (125 WATTS).
3. THE SCHEMATIC SHOWN IS FOR AMPLIFIERS BEGINNING WITH SERIAL NO. 850
4. T1 (BOGEN NO. T 288-2) USED IN AMPLIFIERS ABOVE SERIAL NO. 350. BOGEN NO. T 288-1, USED IN PREVIOUS AMPLIFIERS, IS SHOWN IN FIG. A.
5. T2 (BOGEN NO. T360-1) USED IN AMPLIFIERS BELOW SERIAL NO. 600, IS SHOWN IN FIG. B. CIRCLED TERMINALS APPLY ONLY TO SERIAL NOS. 98 TO 120 AND 205 TO 227 INCLUSIVE.
6. T3 (BOGEN NO. T357-1) USED IN AMPLIFIERS BELOW SERIAL NO. 600, NO. T 357-3 AND NO. T357-5 USED AMPLIFIERS BETWEEN SERIAL NO. 601 AND NO. 849. REFER TO FIG. C.

REDRAWN FROM ISSUE 2 WITH THE FOLLOWING CHANGES:
T2 WAS T360-1
T3 WAS T357-1
C10 WAS .5 MF, 600 V
D-D PART-LOGOE
C11 WAS .1MF, 2 KV AND IN SERIES WITH 1K RESIS 2.
R14 WAS .47 MEG, ½ WATT
R2 WAS .47 MEG, ½ WATT
R21, R22, R23, R24, R25, R26, R34 AND R37 IS WERE NOT SHOWN
ADDED 2, 3 AND 4 REVISED

ISSUE: 3	10-27-69	JFA

C4, C5 WERE .05MF, 810V AND 800 V WERE 835V AND 825V RESP. T3 WAS BOGEN T 357-2. C12 WAS 1 MF. NOTE: 5 REVISED NOTE: 6 ADDED AND FIG. C CHANGED TO AGREE

ISSUE: 4	4-2-70	CM

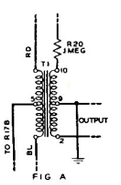

FIG A

BOGEN NO T288-1

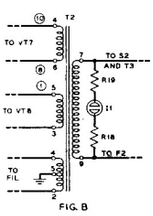

FIG. B

BOGEN NO T360-1

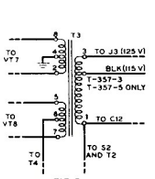

FIG.C

BOGEN NO. T357-1, T-357-3, T-357-5

SYMBOL NO.	PART NO.	DESCRIPTION
C1		CAPACITOR, .002 MF. 500 VOLTS
C2		CAPACITOR, .01 MF. 600 VOLTS, C-D #GT851
C3, C6		CAPACITOR, 50 MF. 50 VOLTS, C-D #BR 505
C4, C5, C12		CAPACITOR, .047 MF. 600 VOLTS, C-D #GT6547
C7		CAPACITOR, .001 MF. 600 VOLTS, C-D #GT601
C8A, C8B		CAPACITOR, 8-8 MF. 500 VOLTS, C-D #EB10018
C9		CAPACITOR, 2 MF. 1000 VOLTS, C-D #T-10020
C10		CAPACITOR, .25 MF. 1200 VOLTS, C-D #MD-12P25
C11		CAPACITOR, .1 MF. 600 VOLTS, C-D #DYRT-8010
F1		FUSE, 2.5 AMP. NO. MDL-2.5
F2		FUSE, 1.5 AMP. NO. MDL-1.6
I1		PILOT LIGHT, NE 51
J1		RECEPTACLE, INPUT, 6 PRONG
J2		RECEPTACLE, OUTPUT, 5 PRONG
L1		REACTOR, BOGEN #T312 BU
L2		REACTOR, BOGEN #T 301 B
P2		PLUG, AC
R1, R16		POTENTIOMETER, .5 MEG., IRC #Q13-133
R2, R10, R13		RESISTOR, .47 MEG., ½ WATT, IRC #BTS-470 K
R3		RESISTOR, 22,000 OHMS, ½ WATT, IRC #BTS-22 K

SYMBOL NO.	PART NO.	DESCRIPTION
R4		RESISTOR, 680 OHMS, ½ WATT, IRC #BTS-680
R5, R6		RESISTOR, 3900 OHMS, 1 WATT, IRC #BTA-3900-5%
R7		RESISTOR, 12,000 OHMS, ½ WATT, IRC #BTS-12 K
R8, R9		RESISTOR, .22 MEG., ½ WATT, IRC #BTS-220 K
R11, R12		RESISTOR, 750 OHMS, 2 WATT, IRC #BTB-750
R14		RESISTOR, 1000 OHMS, 10 WATT, IRC 1¾ AA-1000
R16, R18		RESISTOR, 47,000 OHMS, ½ WATT, IRC #BTS-47 K
R17A, R17B		RESISTOR, 50,000 OHMS, 50 WATT, IRC #EPA-50 K
R15, R20		RESISTOR, 68,000 OHMS, 2 WATT, IRC #BTB-68 K
R21, R22		RESISTOR, 47 OHMS, 1 WATT IRC #BTA-47
R23		RESISTOR, 2200 OHMS, 2 WATT IRC #BTB-2200
R24		RESISTOR, 1.5 MEG, 2 WATT IRC #BTB-1.5 M
R25, R26		RESISTOR 22 OHMS, ½ WATT IRC #BTS-22
S1		SWITCH, D.P.S.T. H & H #80800
S2		SWITCH INTERLOCK, H & H #80360
T1		TRANSFORMER, OUTPUT, BOGEN #T289-2
T2		TRANSFORMER, FILAMENT, BOGEN #T360-3
T3		TRANSFORMER, PLATE, BOGEN #T357-6
T4		TRANSFORMER, DRIVER, BOGEN #T119B4
V1		VACUUM TUBE, 6SL7GT
V2, V3, V6		VACUUM TUBE, 6SN7GT
V4, V5		VACUUM TUBE, #807
V7		VACUUM TUBE, 5R4GY
V8		VACUUM TUBE, 5Y3GT

ALTEC SERVICE CORPORATION
STUDIEX

NTS-1125 AMPLIFIER
SCHEMATIC

NATIONAL THEATRE SUPPLY
92 GOLD ST.
NEW YORK, N.Y.

DR	CHK.	APP'D CM

NS-128

40.03
AMPLIFIER, NTS-1125

Printed in U.S.A.

1. DESCRIPTION

Type - AM-149 - Rotary type for three projectors - 360° continuous clockwise rotation with "OFF" position provided between successive operation positions.
AM-165 - Rotary type for two projectors (normal) - 60° oscillating movement with "OFF" position provided between successive operation positions.
Use - Provides changeover for AM-148 Volume Control Amplifiers.
Size - 10-1/4" high x 8-1/4" wide x 5" deep.
Weight - 5 lbs.
Accessories - AM-2129 Extension Volume Control with AM-149 Cabinet and
AM-2139 " " " " AM-165 "

2. INSTALLATION

A. The AM-149 Cabinet should be installed adjacent to the observation port for the middle projector and the AM-2129 parts installed per sketch below.

B. The AM-165 cabinet should be installed adjacent to the observation port for the left projector and the AM-2139 parts installed per sketch below.

3. OPERATION

Set the changeover switch so that the machine being threaded is inoperative. Changeover is then made when the incoming machine is up to speed by rotating the knob at either machine position until the number corresponding to the incoming machine's number is opposite the index on the cabinet.

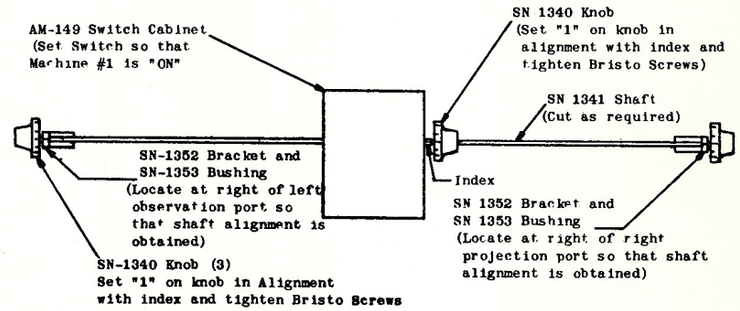

NOTE: A second Bracket and Bushing (supplied with each AM-2129 or AM-2139) may be installed at the center of the shaft if desired.

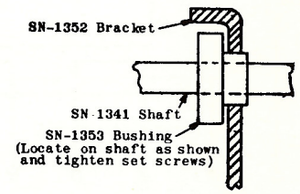

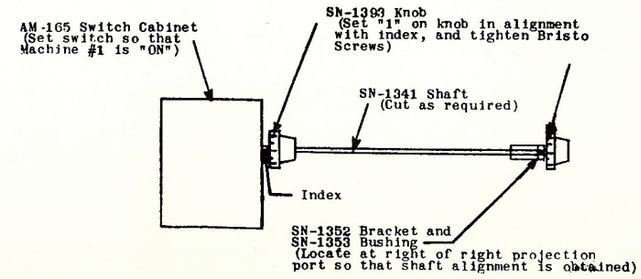

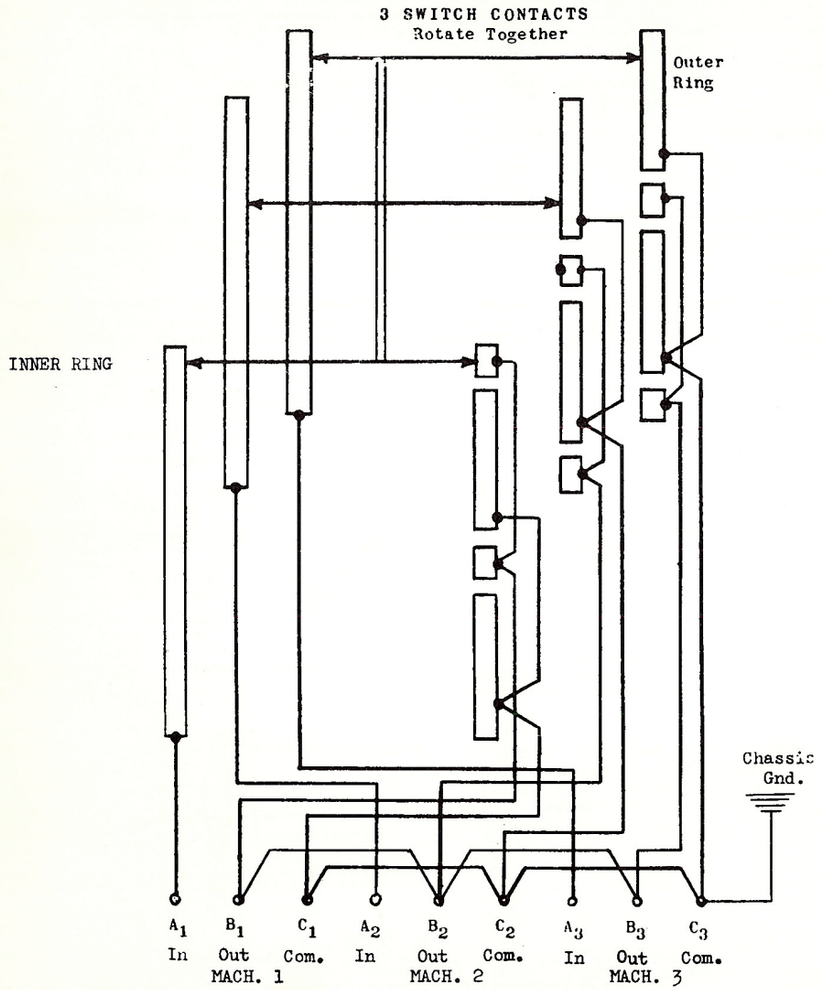

AM-149 & 165 SWITCH CABINET SCHEMATIC

NOTE: AM-165 normally two machine switch, but can be modified for three machines with minor mechanical changes.

WD-1098

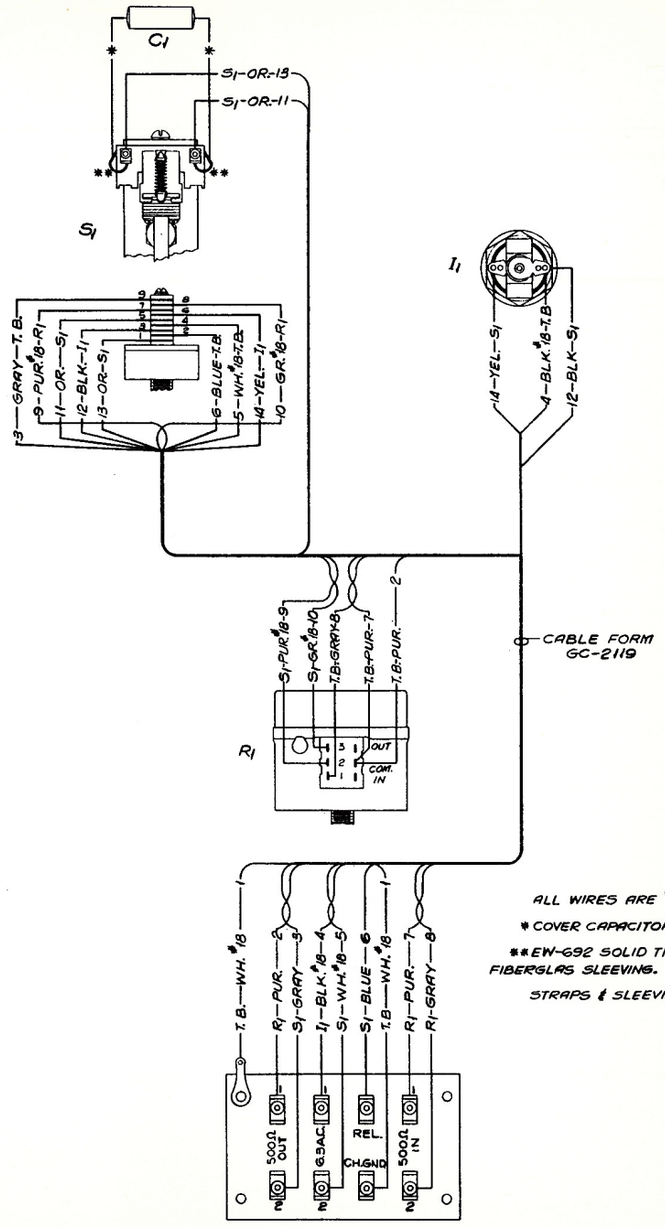

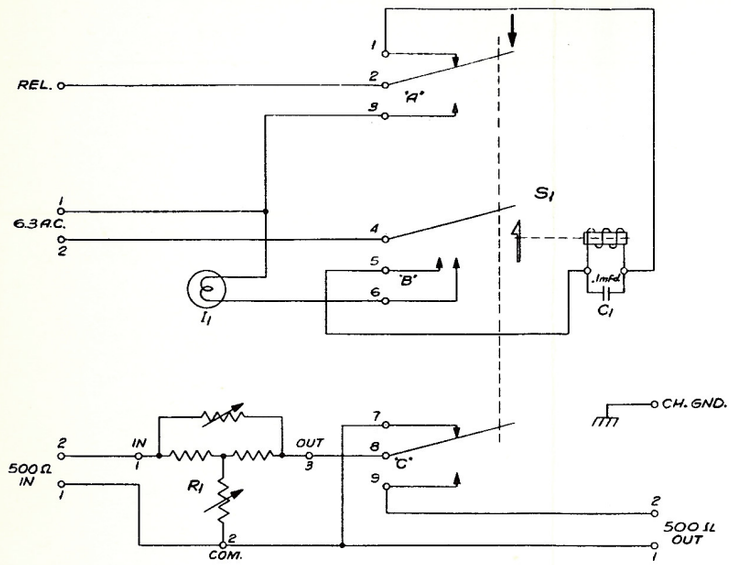

S1 { 'A' MOMENTARY CONTACTS
'B' & 'C' LATCHING CONTACTS

SYMBOL	PART Nº	DESCRIPTION
I1	PA-2425	INDICATOR LAMP, 6-8 V.
R1	PA-2276	'TEE' ATTENUATOR, 500Ω
S1	PC-2679	CHANGEOVER SWITCH
C1	PA-2099	CAPACITOR .1mFD., 400 V.D.C.W. PAPER, TUBULAR

ALL WIRES ARE #20 A.W.G., UNLESS OTHERWISE SPECIFIED.

* COVER CAPACITOR LEADS WITH EW-949 FIBERGLAS SLEEVING.

** EW-692 SOLID TINNED COPPER WIRE COVERED WITH EW-949 FIBERGLAS SLEEVING.

STRAPS & SLEEVING ARE TABULATED ON CABLE FORM DWG.

REFERENCE DWG. AMC-197 CHANGEOVER CABINET ASS'Y

SCALE
DRAWN 11-3-49
WIRING DIAGRAM &
SCHEMATIC
CHANGEOVER CABINET
INTERNATIONAL PROJECTOR CORPORATION
88 LA FRANCE AVENUE
BLOOMFIELD NEW JERSEY
DR. A.D. CH'K. APP'D.
PRODUCT CLASS F
WD-1098

UNLESS OTHERWISE SPECIFIED
REMOVE ALL BURRS BREAK SHARP CORNERS
TOLERANCES OF ALL FRACT. DIM. TO BE ± 1/64
TOLERANCES OF ALL DECIMAL DIM. TO BE ± .005

GB-1920

ISSUE 1 10-21-49
(A) ADDED "SHIELD-17 EW-692"
(B) PUR-GREY SHIELDED TWIST WAS "PUR GREY-TWIST"
J.S. | | |
ISSUE: 2 1-19-50
"A.C. GND" ON TERMINAL BOARDS WAS "115 A.C."
A.D. | | |
ISSUE 3 3-23-50

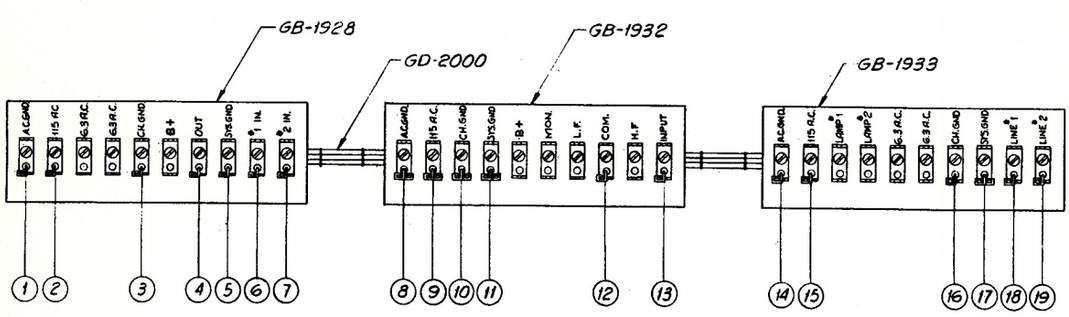

FROM	TO	COLOR
1	8	PUR. (TWIST)
2	9	GRN. (TWIST)
3	10	WHITE
4	13	BLUE
5	17	BLACK
6	18	PUR (SHIELDED TWIST) (B)
7	19	GRAY (SHIELDED TWIST) (B)
8	14	PUR. (TWIST)
9	15	GRN. (TWIST)
10	16	WHITE
11	17	BLACK
11	12	"
(B) SHIELD	17	EW-692

THREAD WIRES THRU EYELETS & SLOTS, WRAP 1/2 TURN AROUND POST & SOLDER.

Note: On "Pur-Gray" shielded leads of cable connecting to #1 IN and #2 IN:
Change "Pur" to "Blk or Pur"
Change "Gray" to "RD or Gray"

Issued by Engineering Department Printed in U.S.A.

UNLESS OTHERWISE SPECIFIED
REMOVE ALL BURRS BREAK SHARP CORNERS
TOLERANCES OF ALL FRACT. DIM. TO BE ± 1/64
TOLERANCES OF ALL DECIMAL DIM. TO BE ± .005

C

SCALE 1:2

TERMINAL BOARD AND CABLE FORM ASS'Y. SINGLE AMP. CAB. KIT.

INTERNATIONAL PROJECTOR CORPORATION
85 LA FRANCE AVENUE
BLOOMFIELD NEW JERSEY

DR. A.D. CH'K. APP'D

PRODUCT CLASS F

GB-1920

ALTEC SERVICE CORPORATION SIMPLEX

AM-1092 CABINET KIT 40.15

WC-1099

ISSUE		
1	2-2-50	
#1 WAS 48-2		
2	4-4-50	

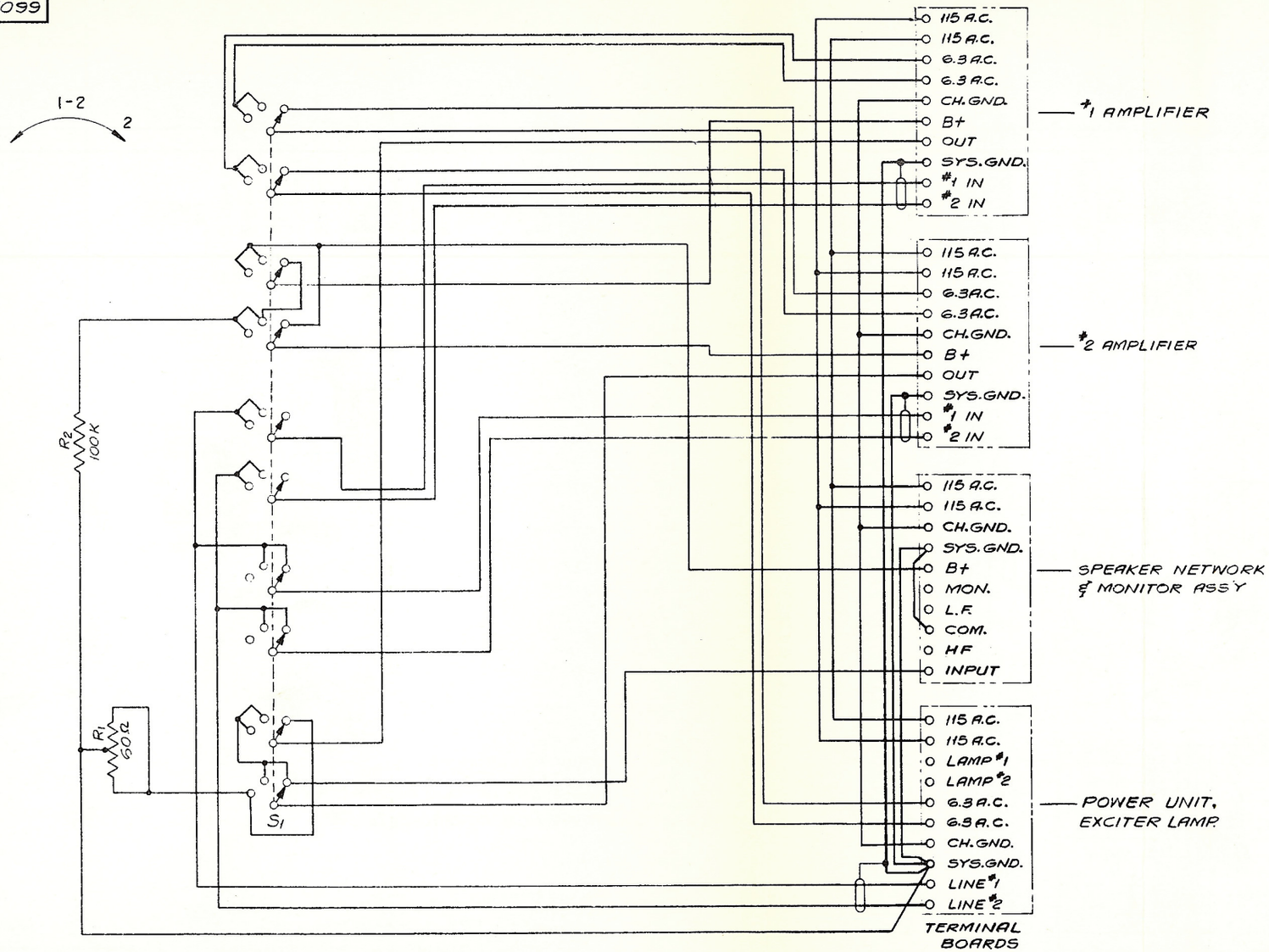

SYMBOL	I.R.C. PT. Nº	DESCRIPTION
R_1	PA-2180	RESISTOR, 60Ω, 25W, WIREWOUND
R_2	-2076	" ,100K, 2W, CARBON
S_1	-2179	ROTARY SWITCH, 12 POLE, 3 POS.

REFERENCE DWG.
GC-1921 TERM. BOARD & SELECTOR SWITCH ASS'Y.

SCALE
DRAWN 7-21-49

SCHEMATIC
TERM. BOARD & SELECTOR SWITCH ASS'Y

INTERNATIONAL PROJECTOR CORPORATION
55 LA FRANCE AVENUE
BLOOMFIELD NEW JERSEY

DR. A.D. CH'K. APP'D.

PRODUCT CLASS F

WC-1099

UNLESS OTHERWISE SPECIFIED
REMOVE ALL BURRS. BREAK SHARP CORNERS
TOLERANCES OF ALL FRACT. DIM. TO BE ± 1/64
TOLERANCES OF ALL DECIMAL DIM. TO BE ± .005

Issued by
Engineering Department
Printed in U.S.A.

ALTEC SERVICE CORPORATION
SIMPLEX

GC-1921

ISSUE 1 2-2-50
A.C.GND. ON TERMINAL BOARDS HAS "115 A.C."
A.D.
ISSUE 2. 3-23-50

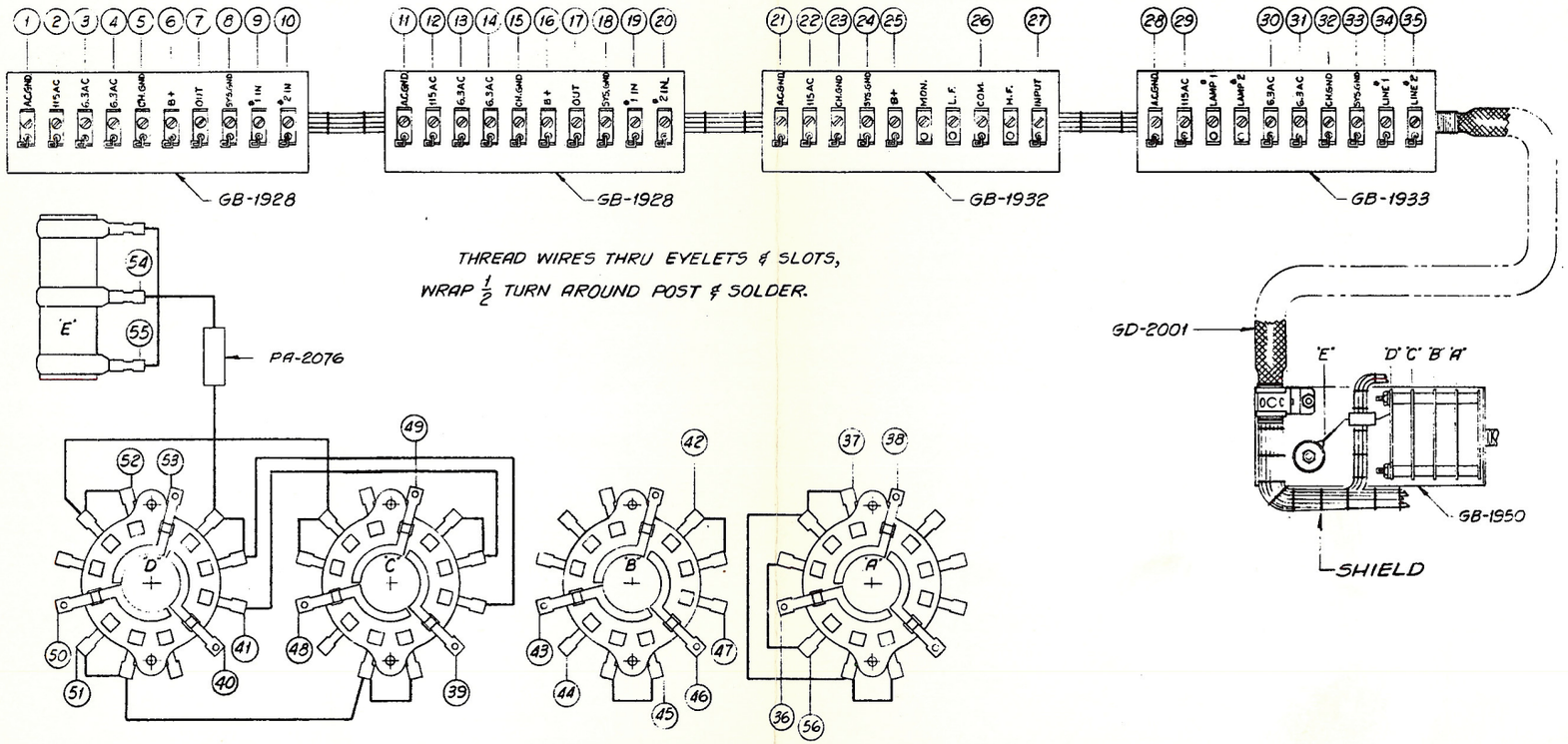

THREAD WIRES THRU EYELETS & SLOTS,
WRAP $\frac{1}{2}$ TURN AROUND POST & SOLDER.

FROM	TO	COLOR
1	11	PUR. TWIST
2	12	GRN. TWIST
11	21	PUR TWIST
12	22	GRN TWIST
21	28	PUR TWIST
22	29	GRN TWIST
3	45	YEL TWIST
4	42	YEL TWIST
5	15	WHITE
15	23	"
23	32	"
6	39	RED
7	36	GREEN
8	33	BLACK
18	33	"
24	33	"
33	54	"

FROM	TO	COLOR
24	26	BLACK
9	48	PUR SH. TWIST
10	49	GRAY SH. TWIST
13	47	YEL TWIST
14	44	YEL TWIST
16	40	RED
17	38	BLUE
19	50	PUR SH. TWIST
20	53	GRAY SH. TWIST
25	41	RED
27	37	ORANGE
30	46	YEL TWIST
31	43	YEL TWIST
34	51	PUR SH. TWIST
35	52	GRAY SH. TWIST
55	56	WHITE
SHIELD	54	BLACK

STRAP REQUIREMENTS

17' EW-692, Nº20 GA. SOLID TINNED COPPER WIRE
9' EW-949, Nº20 FIBREGLAS SLEEVING

Note: On all "Pur-Gray" SH Twist Pairs:
Change "Pur" to BLK or Pur"
Change "Gray" to "RD or Gray"

REFERENCE DWG. WC-1099 SCHEMATIC

SCALE 1:2

TERM. BOARD & SELECTOR
SWITCH ASSEMBLY.
DUAL AMP. CAB. KIT
INTERNATIONAL PROJECTOR CORPORATION
55 LA FRANCE AVENUE
BLOOMFIELD NEW JERSEY
DR. A.D. CH'K. APP'D.

PRODUCT CLASS F

GC-1921

UNLESS OTHERWISE SPECIFIED
REMOVE ALL BURRS BREAK SHARP CORNERS
TOLERANCES OF ALL FRACT. DIM. TO BE ± 1/64
TOLERANCES OF ALL DECIMAL DIM. TO BE ± .005

Issued by
Engineering Department
Printed in U.S.A.

WC-1101

DRAWN 12-29-49
ISSUE 1 2-1-50

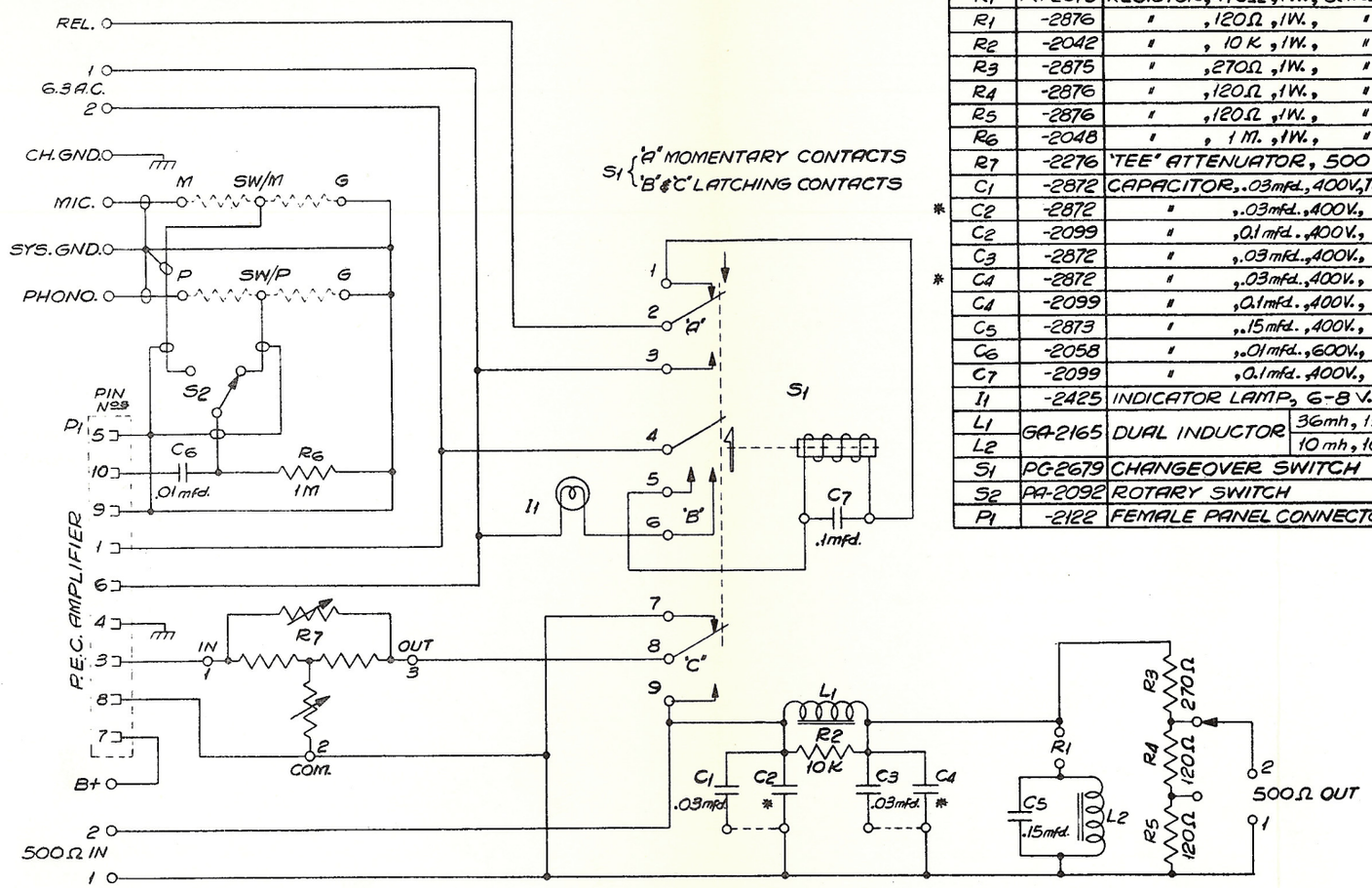

SYMBOL	PART #	DESCRIPTION
R1	PA-2075	RESISTOR, 470Ω, 1W., CARBON
R1	-2876	" ,120Ω, 1W., "
R2	-2042	" , 10K, 1W., "
R3	-2875	" ,270Ω, 1W., "
R4	-2876	" ,120Ω, 1W., "
R5	-2876	" ,120Ω, 1W., "
R6	-2048	" , 1M., 1W., "
R7	-2276	'TEE' ATTENUATOR, 500Ω
C1	-2872	CAPACITOR, .03mfd., 400V, TUBULAR, PAPER
* C2	-2872	" ,.03mfd., 400V., " , "
C2	-2099	" ,0.1 mfd., 400V., " , "
C3	-2872	" ,.03 mfd., 400V., " , "
* C4	-2872	" ,.03mfd., 400V., " , "
C4	-2099	" ,0.1mfd., 400V., " , "
C5	-2873	" ,.15mfd., 400V., " , "
C6	-2058	" ,.01mfd., 600V., " , "
C7	-2099	" ,0.1mfd., 400V., " , "
I1	-2425	INDICATOR LAMP, 6-8 V.
L1	GA-2165	DUAL INDUCTOR 36mh, 15Ω
L2		10 mh, 10Ω
S1	PG-2679	CHANGEOVER SWITCH
S2	PA-2092	ROTARY SWITCH
P1	-2122	FEMALE PANEL CONNECTOR-10 CONTACT

ALTERNATIVE PARTS C2, C4, & R1 FOR HIGH FREQUENCY WARPING ARE SUPPLIED SEPARATELY WITH CABINET ASSEMBLY.

*IN CABINET ASSEMBLY AS SHIPPED.

REFERENCE DWGS.
AMD-1035 CABINET ASSEMBLY
WD-1102 WIRING DIAGRAM

SCALE ~

SCHEMATIC
NON-SYNC CABINET
X-L SOUND SYSTEM

INTERNATIONAL PROJECTOR CORPORATION
88 LA FRANCE AVENUE
BLOOMFIELD NEW JERSEY

DR. A.D. CHK. APP'D.

UNLESS OTHERWISE SPECIFIED
REMOVE ALL BURRS BREAK SHARP CORNERS
TOLERANCES OF ALL FRACT. DIM. TO BE ± 1/64
TOLERANCES OF ALL DECIMAL DIM. TO BE ± .005

PRODUCT CLASS F

WC-1101

"ALBAGERE" REG. U.S. PAT. OFF.

Issued by
Engineering Department
Printed in U. S. A.

ALTEC SERVICE CORPORATION
SIMPLEX

WD-1102

ISSUE 1 2-1-50

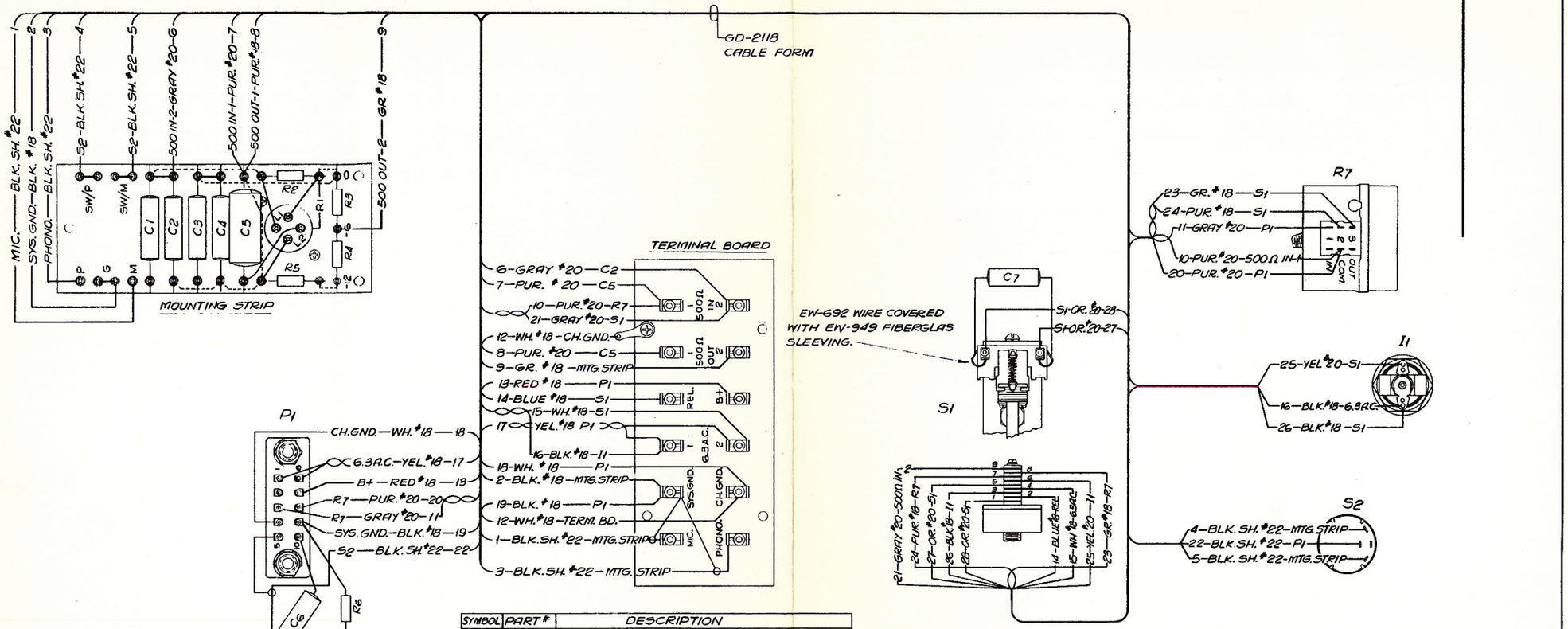

SYMBOL	PART #	DESCRIPTION
R1	PA-2075	RESISTOR, 470Ω, 1W., CARBON
R1	-2876	" , 120Ω, 1W., "
R2	-2042	" , 10K, 1W., "
R3	-2875	" , 270Ω, 1W., "
R4	-2876	" , 120Ω, 1W., "
R5	-2876	" , 120Ω, 1W., "
R6	-2048	" , 1M, 1W., "
R7	-2276	"TEE" ATTENUATOR, 500Ω
C1	-2872	CAPACITOR, .03 mfd., 400V., TUBULAR, PAPER
* C2	-2872	" , .03 mfd., 400V., " "
C2	-2099	" , 0.1 mfd., 400V., " "
C3	2872	" , .03 mfd., 400V., " "
* C4	-2872	" , .03 mfd., 400V., " "
C4	-2099	" , 0.1 mfd., 400V., " "
C5	-2873	" , .15 mfd., 400V., " "
C6	-2058	" , .01 mfd., 600V., " "
C7	-2099	" , 0.1 mfd., 400V., " "
I1	-2425	INDICATOR LAMP, 6-8 V.
L1	GA-2165	DUAL INDUCTOR 36 mh, 15Ω
L2		10 mh, 10Ω
S1	PG-2679	CHANGEOVER SWITCH
S2	PA-2092	ROTARY SWITCH
P1	-2122	FEMALE PANEL CONNECTOR—10 CONTACT.

LEGEND: K=× 1000Ω
M=× 1,000,000Ω

NOTES—

WIRES ON RESISTOR & CAPACITOR MOUNTING STRIP ARE INCLUDED ON DWG. GB-1916.

COVER LEADS OF RESISTORS & CAPACITORS WITH EW-949 FIBERGLAS SLEEVING WHERE NECESSARY.

ALTERNATIVE PARTS R1, C2 & C4 FOR HIGH FREQUENCY WARPING ARE SUPPLIED SEPARATELY WITH CABINET ASSEMBLY.

* IN CABINET ASSEMBLY AS SHIPPED.

REFERENCE DWGS. AMD-1035 CABINET ASSEMBLY
WC-1101 SCHEMATIC

SCALE ~
DRAWN 1-23-50
WIRING DIAGRAM
NON-SYNC CABINET
INTERNATIONAL PROJECTOR CORPORATION
95 LA FRANCE AVENUE
BLOOMFIELD NEW JERSEY
DR. A.D. CK'D. APP'D.
PRODUCT CLASS F
WD-1102

UNLESS OTHERWISE SPECIFIED
REMOVE ALL BURRS BREAK SHARP CORNERS
TOLERANCES OF ALL FRACT. DIM. TO BE ± 1/64
TOLERANCES OF ALL DECIMAL DIM. TO BE ± .005

Issued by
Engineering Department
Printed in U.S.A.

WC-1103

DRAWN 2-2-50
ISSUE 1 2-14-50
R1 WAS 48 Ω
2 4-4-50 WMS

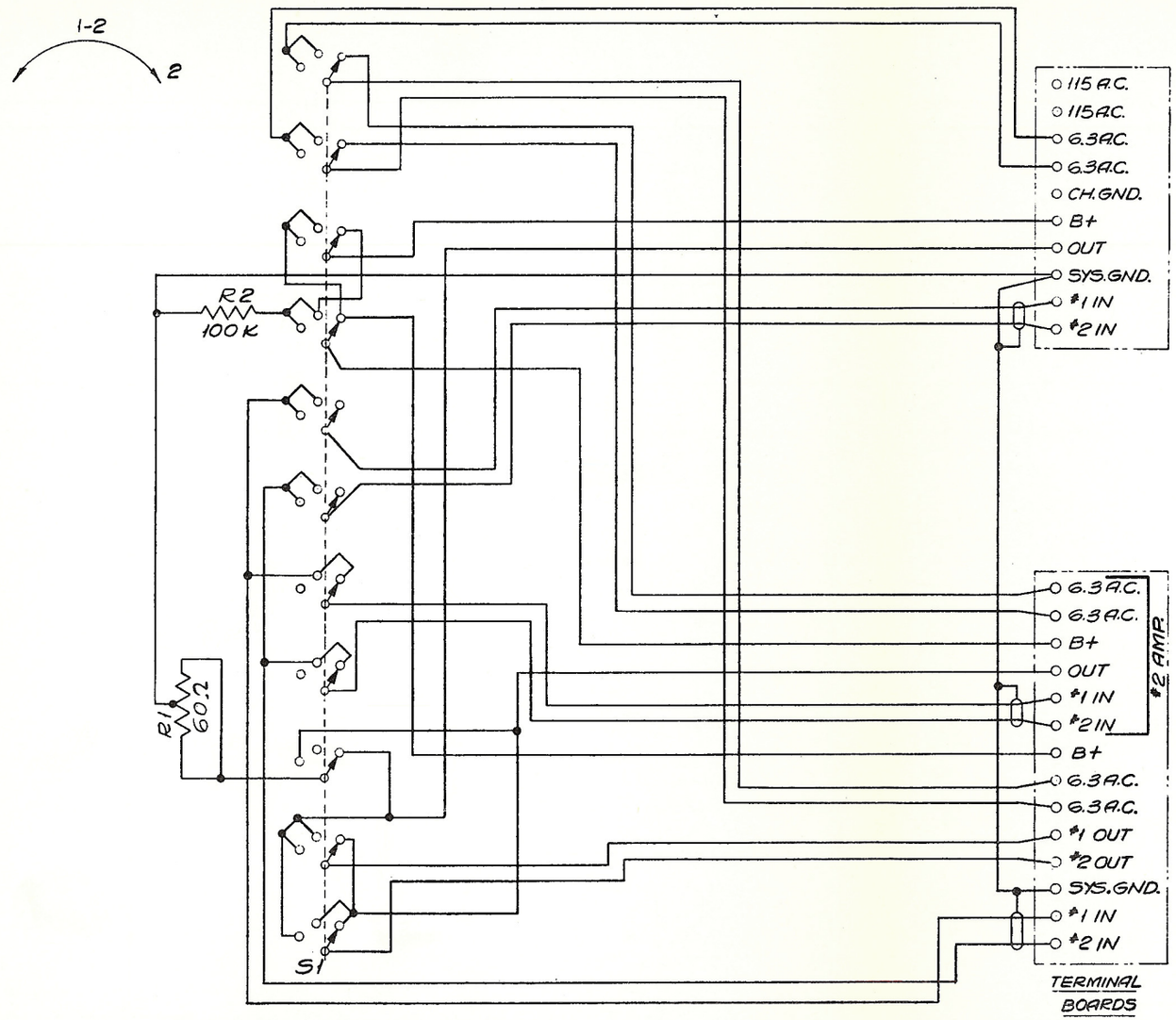

SYMBOL	I.P.C. PT. Nº	DESCRIPTION
R1	PA-2180	RESISTOR, 60 Ω, 25W., WIREWOUND
R2	-2076	" , 100 K, 2W., CARBON
S1	-2179	ROTARY SWITCH, 12 POLE, 3 POS.

REFERENCE DWG. GC-2174 TERMINAL BOARD & SELECTOR SWITCH ASS'Y.

SCALE ~

SCHEMATIC
TERMINAL BOARD & SELECTOR SWITCH ASS'Y

INTERNATIONAL PROJECTOR CORPORATION
55 LA FRANCE AVENUE
BLOOMFIELD NEW JERSEY

DR. A.D. CH'K. APP'D.

UNLESS OTHERWISE SPECIFIED
REMOVE ALL BURRS BREAK SHARP CORNERS
TOLERANCES OF ALL FRACT. DIM. TO BE ± 1/64
TOLERANCES OF ALL DECIMAL DIM. TO BE ± .005

PRODUCT CLASS

F

WC-1103

"ALBANENE" Reg. 1961 K&E CO., N.Y.

Issued by
Engineering Department
Printed in U.S.A.

ALTEC SERVICE CORPORATION
SIMPLEX

GC-2174

FROM	TO	COLOR	
1 OR 2	28	YEL.	TWIST
	31	YEL.	
3	37	RED	
4	23	GREEN	
5	39	PUR.	SH. TWIST
6	41	GRAY	
7	36	RED	
8 OR 9	32	YEL.	TWIST
	29	YEL.	
10	26	BLUE	
11	22	GREEN	
12	19	BLACK	
13	38	PUR	SH. TWIST
14	40	GRAY	
15 OR 16	27	YEL.	TWIST
	30	YEL.	
17	33	RED	
18	25	BLUE	
19	42	BLACK	
20	35	PUR.	SH. TWIST
21	34	GRAY	
24	43	WHITE	
SHIELD	42	BLACK	

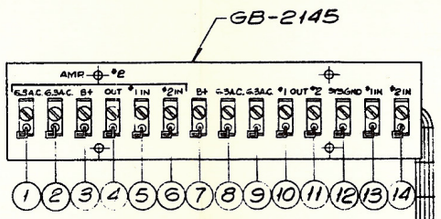

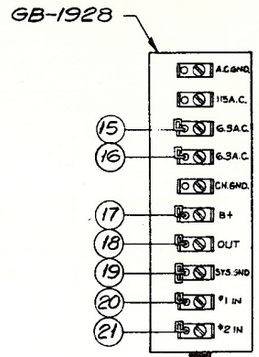

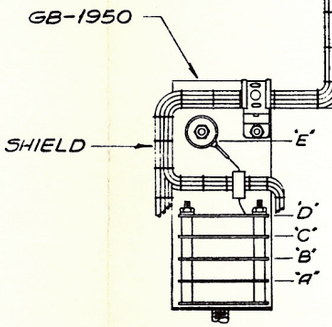

THREAD WIRES THRU EYELETS & SLOTS, WRAP 1/2 TURN AROUND POST & SOLDER.

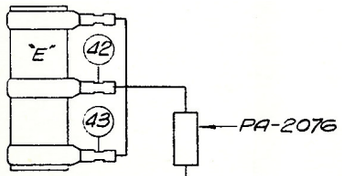

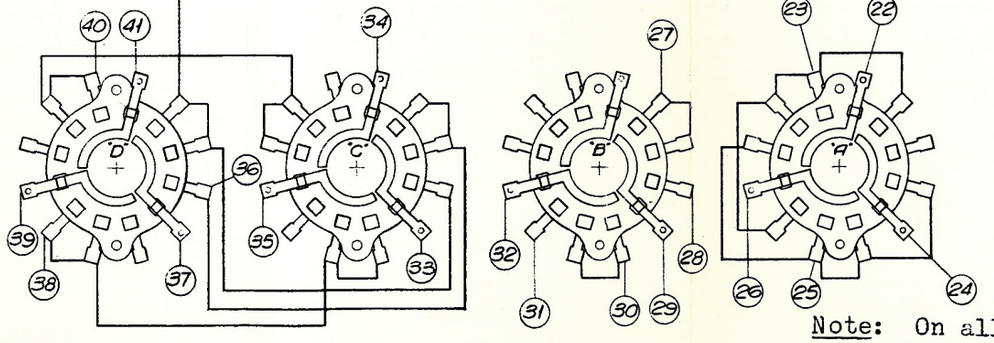

STRAP REQUIREMENTS

EW-692 #20 SOLID, TINNED COPPER WIRE

EW-949 #20 FIBERGLAS SLEEVING

Note: On all "Pur-Gray" SH Twist Pairs:
Change "Pur" to "BLK or Pur"
Change "Gray" to "RD or Gray"

REFERENCE DWG.-WC-1103 SCHEMATIC

DRAWN 1-27-50
ISSUE 1 2-14-50
"A.C.GND." ON GB-1928 WAS "115 A.C."
A.D.
ISSUE 2 3-22-50

SCALE ~

TERMINAL BOARD & SELECTOR SWITCH ASS'Y-SINGLE PLACE CAB.

INTERNATIONAL PROJECTOR CORPORATION
88 LA FRANCE AVENUE
BLOOMFIELD NEW JERSEY

DR. A.D. CH'K. APP'D.

UNLESS OTHERWISE SPECIFIED
REMOVE ALL BURRS BREAK SHARP CORNERS
TOLERANCES OF ALL FRACT. DIM. TO BE ± 1/64
TOLERANCES OF ALL DECIMAL DIM. TO BE ± .005

PRODUCT CLASS F

GC-2174

Issued by
Engineering Department
Printed in U.S.A.

WC-1104

SYMBOL	I.P.C. PT. Nº	DESCRIPTION
R1, R2	PA-2180	RESISTOR, 60Ω, 25W., WIREWOUND
R3, R4, R5	-2076	" , 100K, 2W., CARBON
S1, S2	-2179	ROTARY SWITCH, 12 POLE, 3 POS.

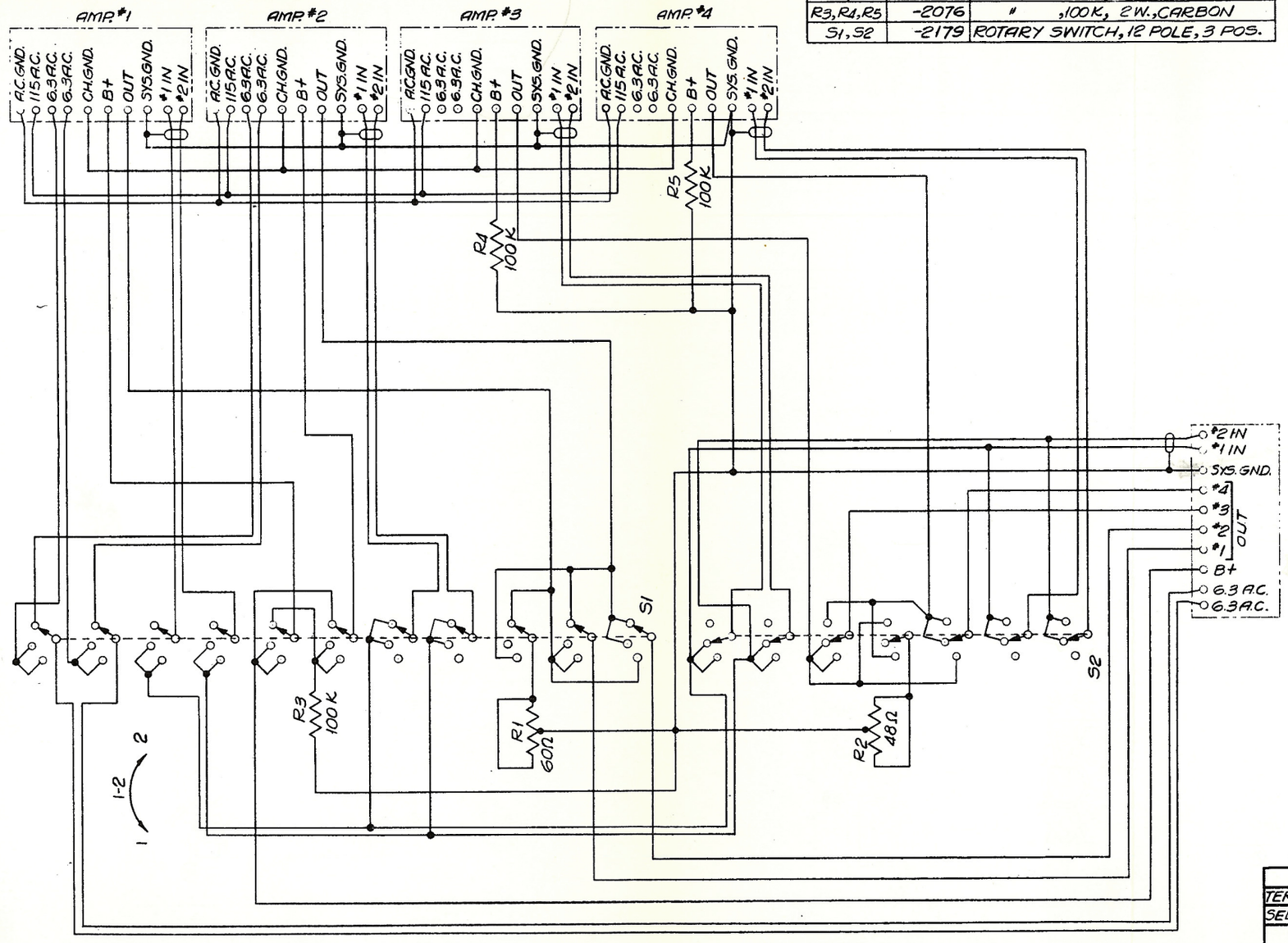

DRAWN 2-3-50
ISSUE 1 3-8-50
R1 WAS 48Ω
2 4-4-50

SCALE ~

REFERENCE DWG. GD-2175 — TERMINAL BOARD & SELECTOR SWITCHES ASSY.

SCHEMATIC
TERMINAL BOARDS &
SELECTOR SWITCHES

INTERNATIONAL PROJECTOR CORPORATION
55 LA FRANCE AVENUE
BLOOMFIELD NEW JERSEY

DR. A.D. CH'K. APP'D.

UNLESS OTHERWISE SPECIFIED
REMOVE ALL BURRS BREAK SHARP CORNERS
TOLERANCES OF ALL FRACT. DIM. TO BE ± 1/64
TOLERANCES OF ALL DECIMAL DIM. TO BE ± .005

PRODUCT CLASS

F

WC-1104

Issued by
Engineering Department
Printed in U.S.A.

ALTEC SERVICE CORPORATION
SIMPLEX

GD-2175

ISSUE 1 5-8-50

FROM	TO	COLOR	
1 OR 2	69	YEL.	TWIST
	72	YEL.	
3	58	RED	
4	75	ORANGE	
5	77	GRAY	
6	54	BLUE	
7	51	GREEN	
8	79	BLACK	
8	57	BLACK	
8	13	BLACK	
9	46	PUR.	SH. TWIST
10	49	GRAY	
9	60	PUR.	SH. TWIST
10	65	GRAY	
11	48	GRAY	SH. TWIST
12	50	PUR.	

FROM	TO	COLOR	
13	20	BLACK	
13	27	BLACK	
13	37	BLACK	
14	55	GREEN	
15	22	WHITE	
22	30	WHITE	
30	40	WHITE	
16	23	GR.	TWIST
17	24	PUR.	
23	33	GR.	TWIST
24	34	PUR.	
33	43	GR.	TWIST
34	44	PUR.	
18	45	GRAY	SH. TWIST
19	47	PUR.	
21	53	BLUE	

FROM	TO	COLOR	
25	66	GRAY	SH. TWIST
26	64	PUR.	
28	76	GRAY	
29	59	RED	
31 OR 32	68	YEL.	TWIST
	71	YEL.	
35	62	GRAY	SH. TWIST
36	61	PUR.	
38	74	ORANGE	
39	63	RED	
41 OR 42	67	YEL.	TWIST
	70	YEL.	
52	56	WHITE	
73	78	WHITE	
SHIELD	57	BLACK	
SHIELD	79	BLACK	

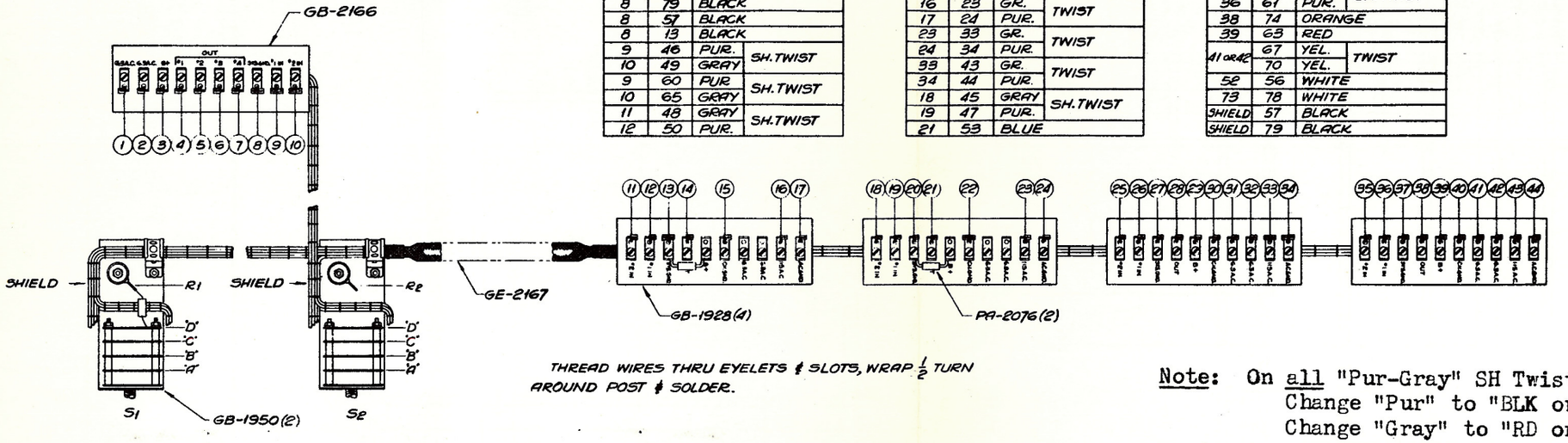

THREAD WIRES THRU EYELETS & SLOTS, WRAP ½ TURN AROUND POST & SOLDER.

Note: On all "Pur-Gray" SH Twist Pairs:
Change "Pur" to "BLK or Pur"
Change "Gray" to "RD or Gray"

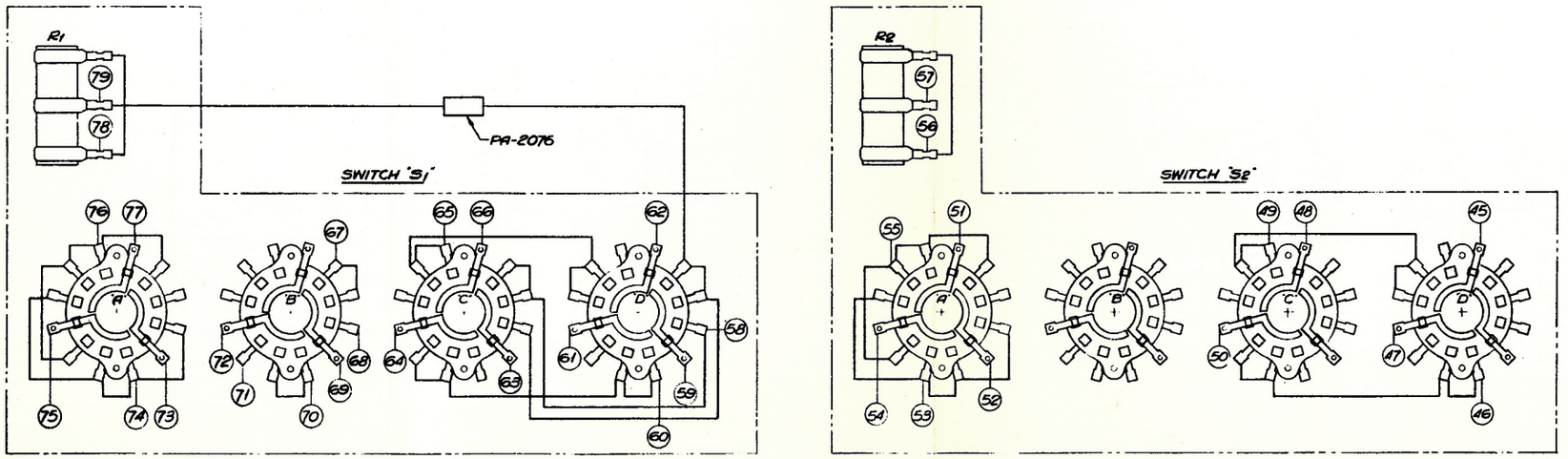

SCALE 1:2

STRAP REQUIREMENTS
EW-692 #20 SOLID, TINNED COPPER WIRE
EW-949 #20 FIBERGLAS SLEEVING

REFERENCE DWG.—WC-1104 SCHEMATIC

TERMINAL BOARD & SELECTOR SWITCH ASSY (CABINET KIT AM-1099)
INTERNATIONAL PROJECTOR CORPORATION
96 LA FRANCE AVENUE
BLOOMFIELD NEW JERSEY
DR. A.D. CHK. APP'D.

PRODUCT CLASS F GD-2175

UNLESS OTHERWISE SPECIFIED
REMOVE ALL BURRS BREAK SHARP EDGES
TOLERANCES OF ALL FRACT. DIM. TO BE ± 1/64
TOLERANCES OF ALL DECIMAL DIM. TO BE ± .005

Issued by
Engineering Department
Printed in U.S.A.

SYS. GAIN ADJ.	C-7, 9, 11, 13, 15 AND 17	C-8, 10, 12, 14, 16 AND 18	STRAP PER FIG.	RELATIVE RESPONSE - 1000 CYCLES 0db REFERENCE CYCLES PER SECOND 2000	3000	4000	5000	6000	7000	8000
	OPEN	OPEN	1(a)	0	0	0	.2	.25	.5	.7
	OPEN	0.1	2	-.3	.7	-1.2	-1.6	-2.3	-2.7	-3.0
	OPEN	0.15	2	-.4	-1.2	-2.1	-2.7	-3.4	-4.1	-4.5
	0.1	0.1	3	-.9	-2.0	-3.4	-4.3	-5.3	-6.0	-6.5
	0.15	0.15	3	-1.6	-3.3	-4.0	-5.0	-6.0	-7.6	-8.0
-4	0.1	OPEN	4	-.3	.6	1.0	1.5	1.7	2.3	2.5
-8	0.15	0.1	5	.8	1.2	1.4	1.4	1.3	1.3	1.3
-8	0.1	OPEN	4	.8	1.8	2.6	3.5	3.9	4.5	5.0
-8	0.1	0.1	6	+.20	3.1	3.7	4.3	4.6	4.9	6.2
-12	0.1	0.15	5	1.0	1.5	1.6	1.7	1.8	1.6	1.5
-12	0.1	0.1	5	1.5	2.4	2.8	3.2	3.3	3.4	3.4
-12	0.1	OPEN	4	2.2	4.0	5.1	6.2	6.8	7.2	7.6

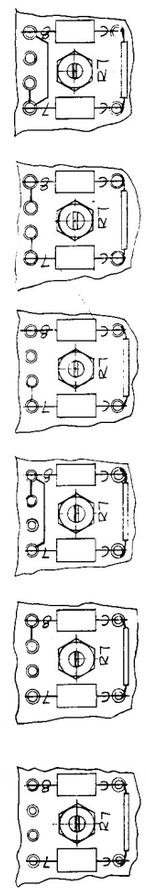

NOTES - (a) RESPONSE AS SHIPPED
(b) SIGNAL SOURCE - OSCILLATOR WITH 500 OHMS IN SERIES USED IN OBTAINING ALL DATA.
(c) CAPACITORS SUPPLIED IN KIT G-2534 SHIPPED WITH AM-1089
(d) TYPICAL STRAPPING - ONLY CHANNEL #1; PROJECTOR #1 SHOWN.
(e) BALANCE POTENTIOMETERS R-7 THRU R-18 FULL GAIN IN CLOCKWISE POSITION. ROTATE COUNTER CLOCKWISE FOR DESIRED ATTENUATION (16 db RANGE).

DRAWN 6-23-55
ISSUE :-1 6-27-55
SCALE
AM-1089 STEREO
BALANCE & WARPING
ADJUSTMENTS
INTERNATIONAL PROJECTOR CORPORATION
85 LA FRANCE AVENUE
BLOOMFIELD NEW JERSEY
DR. CHK. APPD.
IN-130
PRODUCT CLASS
UNLESS OTHERWISE SPECIFIED REMOVE ALL BURRS. BREAK SHARP CORNERS TOLERANCES OF ALL DECIMAL DIM. TO BE ± .005

IN-130

Printed in U.S.A.

FIGURE 3
AM-1089 SYSTEM CONTROL CABINET
STEREO HIGH FREQUENCY ADJUSTMENTS

IN-131

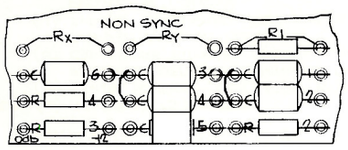

FIGURE = 1
SHOWN AS SHIPPED

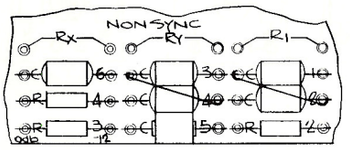

FIGURE = 2
SERIES STRAPPING-R1 OPEN

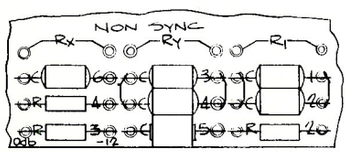

FIGURE = 3
PARALLEL STRAPPING - R1 OPEN

NOTE
FOR 12 db INCREASE IN LEVEL
MOVE GREEN-WHITE WIRE
FROM RIGHT TERMINAL OF
R3 TO THE LEFT TERMINAL.

SYS. GAIN ADJ.	AM-1089 SYSTEM CONTROL CABINET ADJUSTMENTS C-1 Mfd	C-2 Mfd	C-3 Mfd	C-4 Mfd	C-5 Mfd	R-1 OHMS
0	0.03	0.03	0.03	0.03		
-12	C-1 & C-2 IN SERIES		C-3 & C-4 IN SERIES		.1	120
0	0.03	0.03	0.03	0.03		
-12	C-1 & C-2 IN SERIES		C-3 & C-4 IN SERIES		.03	120
0						
-12	0.03	OPEN	0.03	OPEN	----	OPEN
0	0.03	0.03	0.03	0.03		
-12	C-1 & C-2 IN SERIES		C-3 & C-4 IN SERIES		.15	120
0						
-12	0.03	OPEN	0.03	OPEN	.03	120 (a)
0	0.03	0.03	0.03	0.03		
-12	C-1 & C-2 IN SERIES		C-3 & C-4 IN SERIES		.15	470
0	0.03	0.03	0.03	0.03		
-12	C-1 & C-2 IN SERIES		C-3 & C-4 IN SERIES		—	OPEN
0	0.03	0.03	0.03	0.03		
-12	C-1 & C-2 IN PARALLEL		C-3 & C-4		—	OPEN

RELATIVE RESPONCE - 1000 CYCLE REFERENCE - ODB CYCLES PER SECOND (C)	2000	2500	3000	3500	4000	5000	6000	7000	8000
	0	+.1	+.1	0	-.3	-2.2	-6.1	-10.4	-15.3
	+.2	+.4	+.6	+1.1	+1.6	+1.0	-3.1	-8.7	-14.8
	-.2	-.6	-.0	-1.3	-2.2	-4.0	-6.3	-9.0	-12.6
	-.2	.4	-.7	-1.0	-1.5	-2.6	-3.0	-5.6	-8.8
	-1.7	-2.5	-3.6	-4.8	-6.4	-9.3	-13.5	-16.2	-19.0
	-1.6	-2.3	-3.0	-3.8	-4.0	-7.4	-10.8	-14.3	-17.8
	+.4	+1.1	+1.6	+1.0	+1.3	-2.7	-7.6	-12.6	-17.4
	+.6	+1.5	+2.7	+3.8	+4.2	-.1	-6.1	-12.0	-16.5
	0	-.2	-.6	-1.0	-1.8	-3.8	-6.2	-9.1	-12.8
	+.2	+.1	-.1	-.3	-.8	-2.0	-3.5	-5.7	-9.2
	-1.4	-2.0	-2.5	-2.5	-2.8	-7.2	-11.3	-14.8	-18.8
	-1.5	-1.6	-1.5	-1.6	-1.1	-5.6	-10.4	-14.5	-18.0
	-1.4	-2.3	-3.1	-4.2	-5.5	-8.5	-11.6	-14.9	-18.4
	-1.2	-1.6	-2.2	-3.0	-4.3	-6.5	-8.5	-12.6	-16.3
	+1.1	+.8	-.9	-3.0	-4.3	-9.5	-13.2	-16.6	-20.3
	0	-.2	-.9	-1.6	-3.2	-7.0	-11.1	-15.1	-19.3

NOTES
(a) RESPONSE AS SHIPPED
(b) THE SMPE MOTION PICTURE RESEARCH COUNCIL TEST FILM ASFA-2 WAS USED IN OBTAINING ALL DATA. (6FT. RG-59/U CABLE)
(c) CAPACITORS & RESISTORS SUPPLIED IN KIT G-2534 SHIPPED WITH AM-1089

UNLESS OTHERWISE SPECIFIED
REMOVE ALL BURRS BREAK SHARP CORNERS
TOLERANCES OF ALL FRACT. DIM. TO BE ± 1/64
TOLERANCES OF ALL DECIMAL DIM. TO BE ± .005
PRODUCT CLASS

DRAWN 6-22-55
ISSUE - 1 6-27-55
SCALE C-5

AM-1089 REGULAR
BALANCE & WARPING
ADJUSTMENTS

INTERNATIONAL PROJECTOR CORPORATION
55 LA FRANCE AVENUE
BLOOMFIELD NEW JERSEY
DR. MC CH'K RR APP'D RM

IN-131

FIGURE 4
AM-1089 SYSTEM CONTROL CABINET
OPTICAL HIGH FREQUENCY ADJUSTMENTS

Printed in U.S.A.

ALTEC SERVICE CORPORATION
SIMPLEX

AM-1089 CONTROL CABINET

W-1215

NOTES
1. R1, C1 THRU C4 AND C7 THRU C15 ARE AS SHIPPED. ALTERNATE PARTS ARE SUPPLIED SEPARATELY WITH ASSEMBLY.
2. Rx AND Ry TO BE ADDED AS REQUIRED FOR MATCHING NON-SYNC INPUT.
3. STRAP IN MATCHING TRANSFORMER "T1" IF REQUIRED TO MATCH HIGH IMPEDANCE INPUT TO POWER AMPLIFIER.
4. ALL RELAY CONTACTS SHOWN IN NON-ENERGIZED CONDITION.

STEREO BALANCE POTENTIOMETERS R7 THRU R12 PROVIDE A 16 DB ATTENUATION RANGE — FULL GAIN IN MAXIMUM CLOCKWISE POSITION.

RELAY 'K7' OPERATION

SYSTEM IN USE	RELAY
STEREO	ENERGIZED
REGULAR	NOT ENERGIZED

SWITCH "S3" SHOWN IN FULL COUNTER-CLOCKWISE POSITION
SWITCH POSITIONS
1 EMERGENCY L-C-R
2 NORMAL
3 EMERGENCY C
4 EMERGENCY L-R

SWITCH S2 SHOWN IN FULL COUNTER-CLOCKWISE POSITION
SWITCH POSITIONS
1 STEREO
2 NON-SYNC
3 REGULAR

RELAY K2 OPERATION

PROJ IN USE	RELAY
#1	ENERGIZED
#2	NOT ENERGIZED

REGULAR INPUT RELAY OPERATION

INPUT	ENERGIZED	NOT ENERGIZED
PROJ #1	K4 & K5	K6
PROJ #2	K4 & K6	K5
NON-SYNC		K4-K5-K6

TO CONNECT 3RD PROJ KIT REMOVE STRAPS AND CONNECT TO CORRESPONDING TERMINALS ON KIT

REFERENCE DRAWINGS
AM-1089 SYSTEM CONTROL CABINET
W-1214 WIRING DIAGRAM

SYMBOL	PART Nº	DESCRIPTION
R2	P-2042	RESISTOR, 10K, 1W, CARBON
R3	-3695	" ,390Ω, 1W, "
R11-R4	-2876	" ,120Ω, 1W, "
R5-R39-R40	-2048	" ,1M, 1W, "
R6	-3851	POTENTIOMETER, 500Ω, 2W
R7 THRU R12	-3850	" ,DUAL 1500/1500
R13 THRU R24	-2040	RESISTOR, 510Ω, 1W, CARBON
R25-R26-R33	-2040	" ,510Ω, 1W, "
R25-29-30-32	-3605	" ,240Ω, 1W, "
R26-27-33-34	-3583	" ,330Ω, 1W, "
R28-R31	-3606	" ,680Ω, 1W, "
R35	-3552	ATTENUATOR, 3 DECK
R41-R42	-3849	POTENTIOMETER, 500K, 1/2 W.
C1 THRU C4-C6	-3855	CAPACITOR, .03 MFD, 200 V., METALLIZED
C5	-3855	" ,.03 MFD, 200 V., "
C7 THRU C13	-3506	" ,.01 MFD, 200 V., "
C8 THRU C24	-3558	" ,.25 MFD, 200 V., "
I1-I2-I3	-2264	SOCKET, PILOT LAMP
J1-J2	-2128	CONNECTOR, FEMALE PANEL
K1-K2-K4-K7	-3584	RELAY, 18 VDC, 6PDT
K5-K6	-3590	" ,18 VDC, 3PST
L1	-3446	INDUCTOR, 30 mh 12%
L2	-3853	" ,10 mh 12%
S1	-3541	SWITCH, PUSHBUTTON
S2	-3736	" ,4 POLE, 3 POSITION
S3	-3524	" ,EMERGENCY SELECTOR, 6 POLE, 4 POS
T1	-3450	TRANSFORMER, MATCHING

DRAWN: 5-11-55
ISSUE 1: 5-17-55
STANDBY SEC T1 ADDED
18 Ω 4 WATT RESISTED ON SHORTED SIDE OF CAPACITORS
C7 WAS .1 MFD, 200 V
ADDED RESISTOR TO R35
REC INPUT DELAY OPERATION WAS K3-K4-K7
ISSUE 2: 6-29-55

SCHEMATIC
AM-1089
INTERNATIONAL PROJECTOR CORPORATION
55 LA FRANCE AVE
BLOOMFIELD, NEW JERSEY
DR'D CHK'D APP'D

F W-1215

AM-1089 CONTROL CABINET

ALTEC SERVICE CORPORATION
SIMPLEX

W-1214

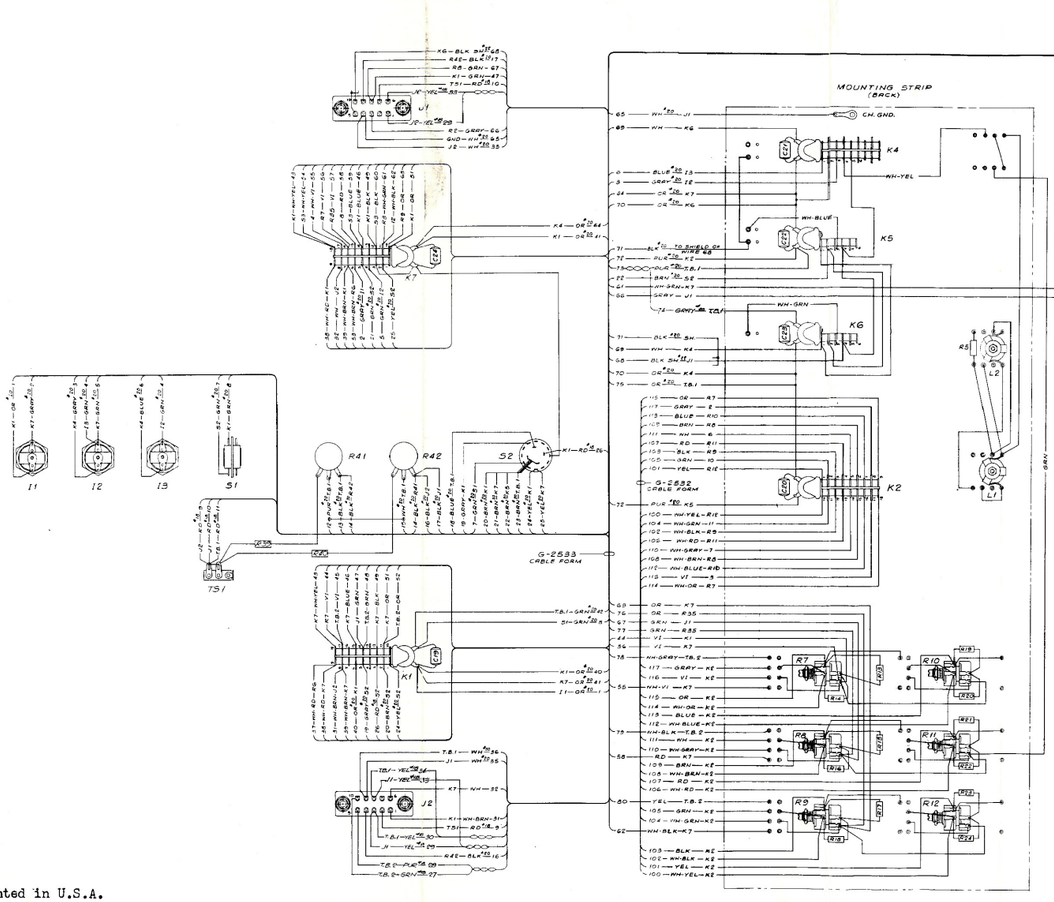

SYMBOL	PART №	DESCRIPTION
R3	-2093	RESISTOR, 10K, 1W, CARBON
R3	-2693	" ,390Ω,1W, "
R1-R4	-2874	" ,100Ω,1W, "
R5-R8-R40	-2048	" ,1M ,1W, "
R6	-3851	POTENTIOMETER,500Ω, 2W,
R7THRU R12	-3850	" ,CURL 1500/1500
R13THRU R24	-2040	RESISTOR, 510Ω,1W, CARBON
R25THRU R32	-2040	" ,500Ω,1W, "
R15-19-30-32	-3635	" ,2400Ω,1W, "
R26-27-33-34	-3663	" ,3300Ω,1W, "
R28-31	-3606	" ,6800Ω,1W, "
R35	-3851	POTENTIOMETER, 5 DECK
R41-R42	-3849	POTENTIOMETER,500Ω,10 W.
C1THRU C16	-3855	CAPACITOR, .05MFD., 200 V., METALLIZED
C8	-3852	" ,.02MFD., 200 V., "
C7THRU C13	-3566	" ,.01 MFD., 200 V., "
C15THRU C24	-3566	" ,.115 MFD., 200 V., "
I1-I2-I3	-2761	SOCKET,PILOT LAMP
J1-J2	-2122	CONNECTOR,FEMALE 24PIN
K1-K5-K6-K7	-3554	RELAY, 18VDC, 4PDT
K3-K4	-3590	" ,18VDC,3PDT
L1	-3446	INDUCTOR,30 H±12%
L2	-3556	" ,10 H±12%
S1	-3541	SWITCH,PUSHBUTTON
S2	-3736	" ,2 POLE,3 POSITION
S3	-3554	" ,EMERGENCY SELECTOR,2POLE,4 POS.
T1	-3450	TRANSFORMER,MATCHING

NOTES

1. R1, C1 THRU C4 AND C7 THRU C16 ARE AS SHIPPED. ALL REMOTE PARTS ARE SUPPLIED SEPARATELY WITH ASSEMBLY.
2. K4 AND K7 TO BE ADDED AS REQUIRED FOR MATCHING NON-SYNC INPUT.
3. STRAP IN MATCHING TRANSFORMER "T1" IF REQUIRED TO MATCH HIGH IMPEDANCE INPUT TO POWER AMPLIFIER.
4. JUMPERS AND STRAPS ON MOUNTING STRIP ARE INCLUDED ON DRAWING G-2525.
5. ALL WIRED IN G-2532 CABLE FORM ARE №24 AWG.
6. STRAPS AND RESISTORS ON SWITCH "S3" ARE INCLUDED ON DRAWING G-2530.
7. UNLESS OTHERWISE SPECIFIED: WIRES IN G-2533 CABLE ARE №24 AWG.

REFERENCE DRAWINGS
AM-1089 SYSTEM CONTROL CABINET
W-1215 SCHEMATIC
G-2525 MOUNTING STRIP ASSEMBLY

DRAWN: 5-24-55
ISSUE-1 7-1-55
ADJUST TERM. STRIPS FOR CLEARANCE WITH MTG. PLATE
REVISION
A THRU C ISSUED AS 1 SHT
D ADDED
E & SHD 2-2587,15 AMD. 200 V.
ISSUE-2 7-11-55

WIRING DIAGRAM
AM-1089
INTERNATIONAL PROJECTOR CORPORATION
55 LA FRANCE AVE
BLOOMFIELD NEW JERSEY
DR RD CHK APPD

F W-1214

Printed in U.S.A.

ALTEC SERVICE CORPORATION
SIMPLEX

AM-1089 CONTROL CABINET

I-2311

DRAWN 8-14-55
ISSUE:-1

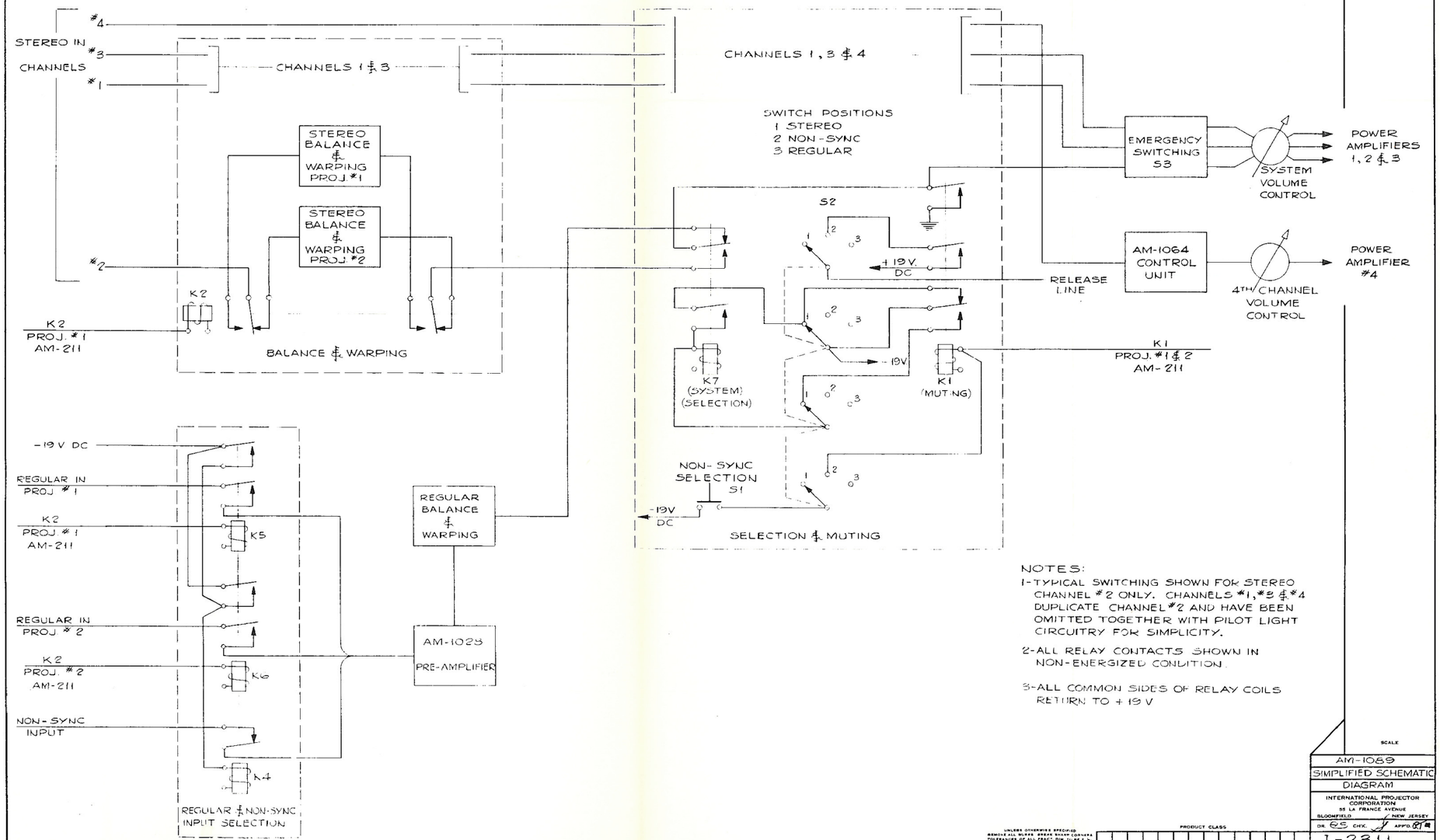

NOTES:

1-TYPICAL SWITCHING SHOWN FOR STEREO CHANNEL #2 ONLY. CHANNELS #1, #3 & #4 DUPLICATE CHANNEL #2 AND HAVE BEEN OMITTED TOGETHER WITH PILOT LIGHT CIRCUITRY FOR SIMPLICITY.

2-ALL RELAY CONTACTS SHOWN IN NON-ENERGIZED CONDITION.

3-ALL COMMON SIDES OF RELAY COILS RETURN TO +19 V

UNLESS OTHERWISE SPECIFIED
REMOVE ALL BURRS. BREAK SHARP CORNERS
TOLERANCES OF ALL FRACT. DIM. TO BE ±
TOLERANCES OF ALL DECIMAL DIM. TO BE ± .005

PRODUCT CLASS

SCALE

AM-1089
SIMPLIFIED SCHEMATIC DIAGRAM

INTERNATIONAL PROJECTOR CORPORATION
35 LA FRANCE AVENUE
BLOOMFIELD NEW JERSEY

DR. ES CHK. APPD.

I-2311

1. DESCRIPTION

The LU-3001 is contained in a wall mounting, sheet metal cabinet 13" high x 20" wide x 12" deep, finished in aluminum gray. The total weight is approximately 30 lbs. The door, which is hinged at the bottom and includes the panel on which the components are mounted, opens downward to a horizontal position so that all parts are accessible without removal from the cabinet.

On the panel are mounted twenty 2-position transfer jack switches, a monitor volume control and an "Amplifier" D.P.D.T. toggle switch. A terminal strip, for external connections is mounted on the back of the cabinet. Each jack switch controls the sound to one ramp in a Drive-In Theatre having IN-A-CAR speakers. An artificial resistance load is inserted when the jack switches are turned "OFF". The "Amplifier" switch selects either of two power amplifiers, when dual amplifier equipment is employed, and two resistors are provided for termination of the unused amplifier equipment.

2. INSTALLATION

The unit should be mounted on one of the Projection Room walls in a convenient, accessible location with reference to the system conduit layout. Likewise, it should be so located that the wiring from the Drive-In area may enter the bottom of the cabinet. All external connections to the terminal strips should be made per the system wiring diagram.

A. Strapping of Terminals INP 1 and INP 2.

Strap these two terminals, when single amplifier equipment is employed to prevent accidental operation of the "Amplifier" switch causing sound failure.

B. Disconnection of Load Resistors R-23 and R-24.

When single amplifier equipment is employed, disconnect the WH-YEL or BLK #16 wire from these resistors and tape, otherwise R-23 and R-24 will be in parallel with the speaker load.

C. Adjustment of Load Resistors (R-1 to R-20 Incl.)

The artificial resistance load, which is inserted when the jack switches are turned off, should be adjusted for each circuit so that the impedance remains constant. With each switch in "ON" position an ohmmeter should be connected successively across each resistance and this resistance adjusted per the following tabulation.

Issued by
Engineering Department
Printed in U.S.A.

October 14, 1949
Issue #2

Speakers Per Circuit	Load Resistor Setting - Ohms
20	100
30	100
40	75
50	60
60	50
70	43
80	38
90	33
100	30
110	27
120	25
130	23

3. OPERATION

A. Normal. Switches 1 to 20 may be set in "ON" position at all times or if desired may be turned on successively as cars park on the several ramps.

The "Amplifier" switch should be set in position "1" regardless of whether single or dual amplifier equipment is supplied.

The monitor volume control should be adjusted as required for adequate volume.

B. Emergency.

1. Speaker Group Failure. A short circuit in the line from the Projection Room to any ramp will affect all of the speakers in the Drive-In area and likewise monitor reproduction. This particular line may be disconnected quickly by turning off the jack switches one at a time until normal sound is restored. The switch that restores sound should remain "OFF" until the trouble is cleared and the other switches turned "ON" as before.

2. Defective Amplifier. When dual amplifier equipment is installed and #1 amplifier becomes inoperative, set amplifier switch in position "2". The defective amplifier is disconnected and operation continues on the emergency amplifier.

4. ASSOCIATED DRAWING. WE-1023 LU-3001 Loudspeaker Control Cabinet - Schematic and Wiring Diagram.

ALTEC SERVICE CORPORATION

LU-3001 LOUDSPEAKER CONTROL CABINET

WE-1023

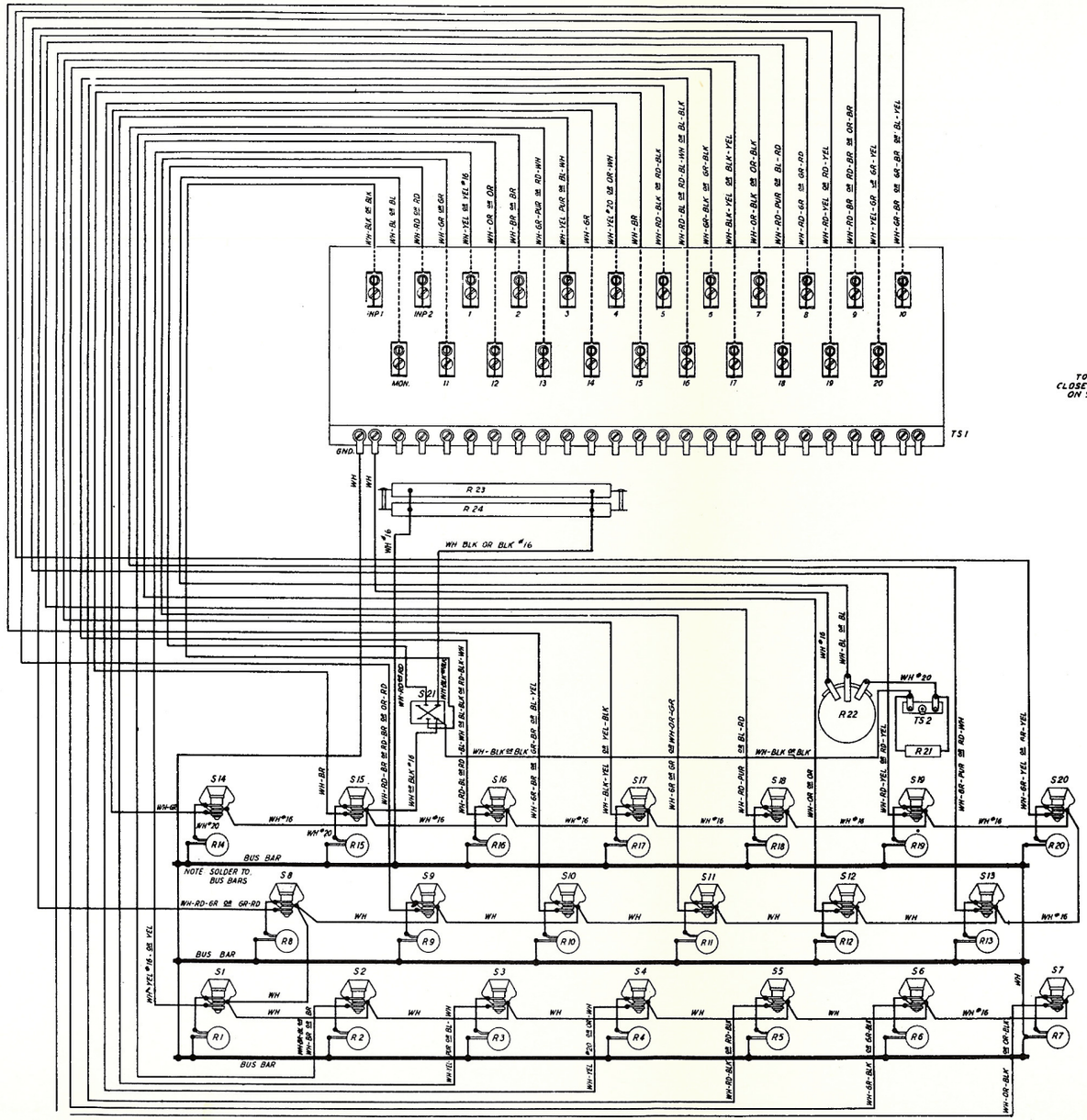

DESIG	PART NO.	APPARATUS
R1 THRU 5	PA-1298	RESISTOR, 100 OHMS, 50 WATTS
R6 THRU 20	PA-1297	RESISTOR, 50 OHMS, 50 WATTS
R21	PA-1269	RESISTOR, 50 OHMS, 5 WATTS
R22	PA-1261	RHEOSTAT, 25 WATTS
S1 THRU 20	PA-1268	SWITCH, STD JACK #30
S21	PA-8126	SWITCH, D.P.D.T., 20 AMP
TS1	GC-1027	TERMINAL STRIP
TS2	PA-1305	TERMINAL STRIP
R23	PA-1392	RESISTOR 5 OHMS 75 WATTS
R24	PA-1392	RESISTOR 5 OHMS. 75 WATTS.

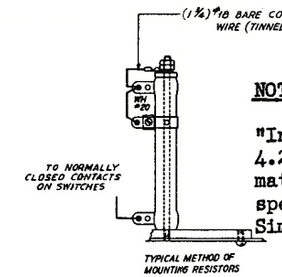

NOTE:
See Par. 1.2 E.B. "In-A-Car Speakers", File 4.22, for impedances of matching transformer and speaker voice coil in Simplex LU-3002 In-A-Car Speakers.

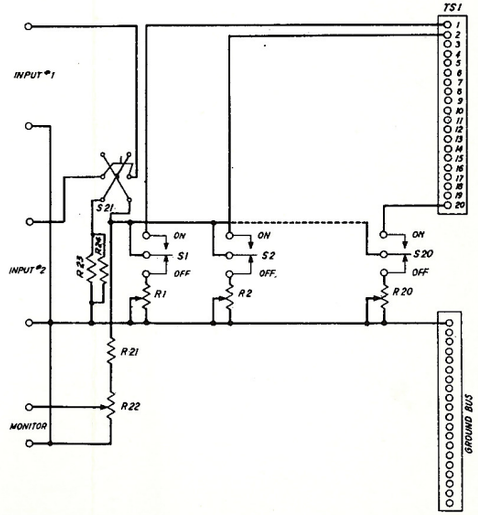

REDRAWN FROM ISSUE 5 WITH EXTENSIVE CHANGES

ISSUE: 6 5-21-48
ADDED R23 & R24 (PA-1392) PA-8126 & WAS PA-1260 & - CHANGED WIRING DIAGRAM & SCHEMATIC TO CONFORM ADDED (1¾)#18 BARE COPPER WIRE (TINNED) SPEC'S ONLY

ISSUE: 7 7-15-48
CENTER TAPS OF R1 R2 & R3 WERE CONNECTED TO "OFF" OF S1 & S2 RESPECTIVELY

ISSUE: 8 7-1-49
TERM. BOARD EYELETS WERE SCREWS REMOVED (1) HOLES FROM TERM. BOARD WIRES WERE SHOWN COMING THRU THESE HOLES. WIRE FROM R-24 TO BUS BAR WAS SHOWN ON S-15 ADDED WH, BR, BL TO WIRE FROM S-2 TO TERM. 2 ADDED WH, OR, GR TO WIRE FROM S-11 TO TERM 11

ISSUE: 9 7-1-49

LU-3001 LOUDSPEAKER & CONTROL CABINET
SCHEMATIC & WIRING DIAGRAM
INTERNATIONAL PROJECTOR CORPORATION
36 LA FRANCE AVENUE
BLOOMFIELD NEW JERSEY

WE-1023

ALTEC SERVICE CORPORATION
SIMPLEX

NTS-69 Monitor Volume Control Cabinet

ISSUE: 1 6-28-50

NTS-69 MONITOR
VOLUME CONTROL CABINET
WIRING DIAGRAM
NATIONAL THEATRE SUPPLY
92 GOLD ST.
NEW YORK, 7 N.Y.
DR. CH'K. APP'D.
NS-122

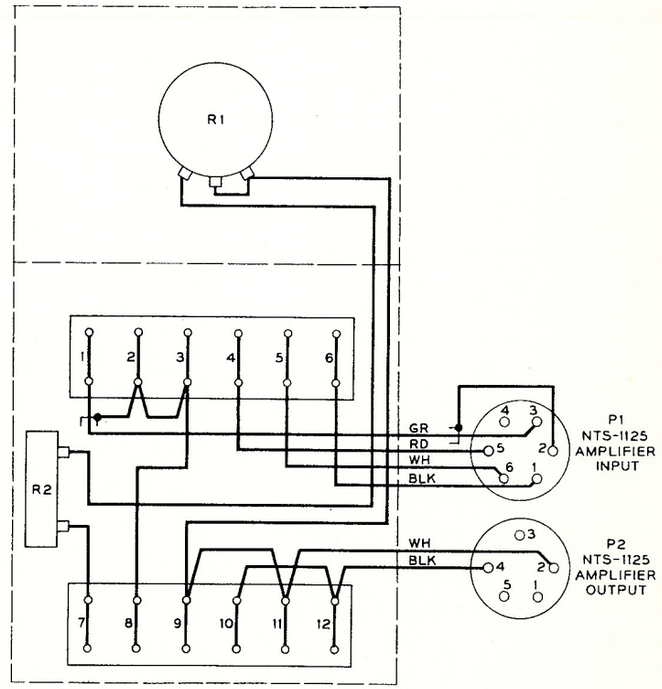

PARTS LIST		
SYM	ITEM	DESCRIPTION
P1		PLUG, 6 PRONG, AMPHENOL #86-PM-6-11
P2		PLUG, 5 PRONG, AMPHENOL #86-PM-5-11
R1		POTENTIOMETER, MALLORY M-600-P, 600Ω
R2		RESISTOR, OHMITE #1014, 200Ω, 10 WATTS

NS-122

Issued by Engineering Department
Printed in U.S.A.



ALTEC SERVICE CORPORATION
S I M P L E X

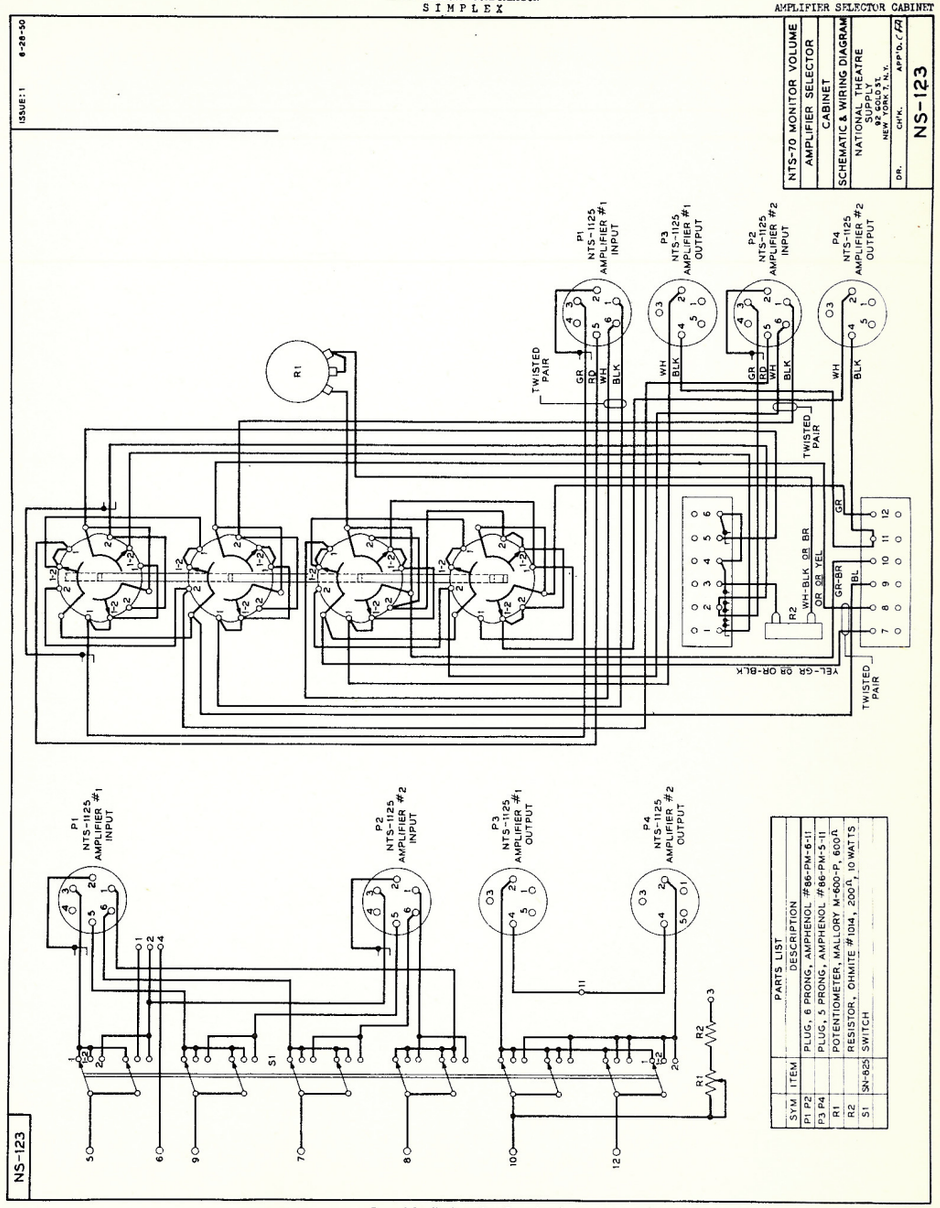

Issued by Engineering Department
Printed in U.S.A.



NS-124

ISSUE: 1 8-28-50

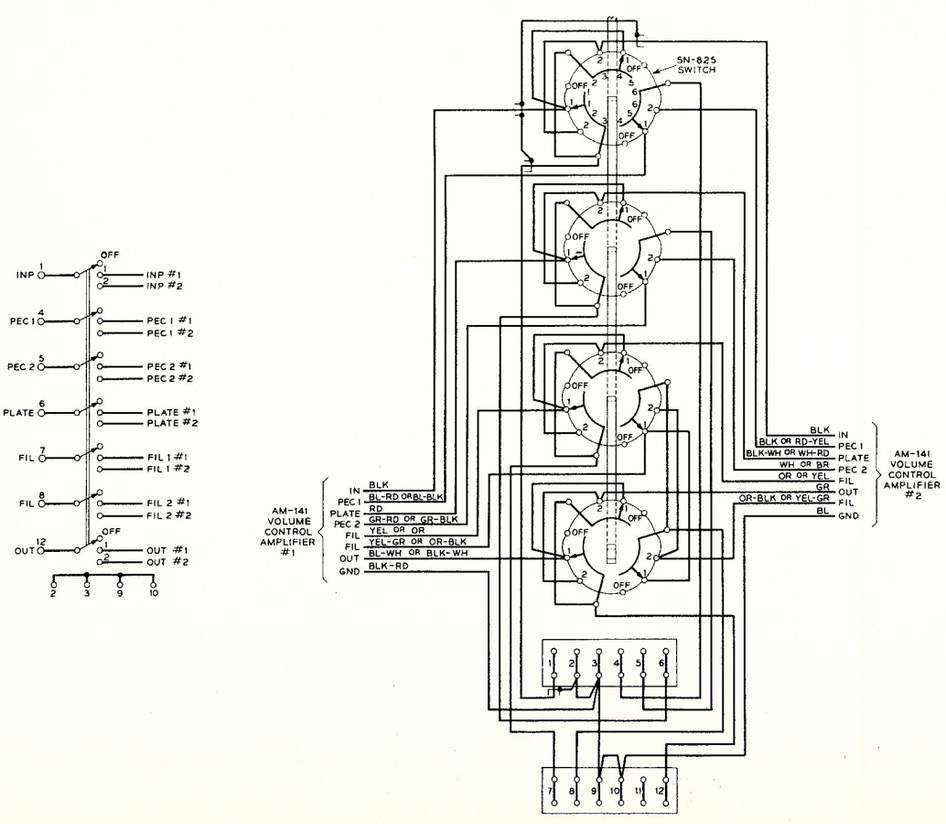

Issued by Engineering Department
Printed in U.S.A.

ALTEC SERVICE CORPORATION
S I M P L E X

NTS-76 Volume Control Amplifier Selector Cabinet 40.15

NTS-76
VOLUME CONTROL AMPLIFIER
SELECTOR CABINET
SCHEMATIC & WIRING DIAGRAM
NATIONAL THEATRE SUPPLY 92 GOLD ST. NEW YORK, 7 N.Y.
DR. CH'K. APP'D. GA
NS-124

NTS-78 AMPLIFIER
SELECTOR CABINET
SCHEMATIC & WIRING DIAGRAM
NATIONAL THEATRE SUPPLY
NEW YORK, N.Y.
DR. CH'K. APP'D. CFA
NS-125

ISSUE:1 6-28-50

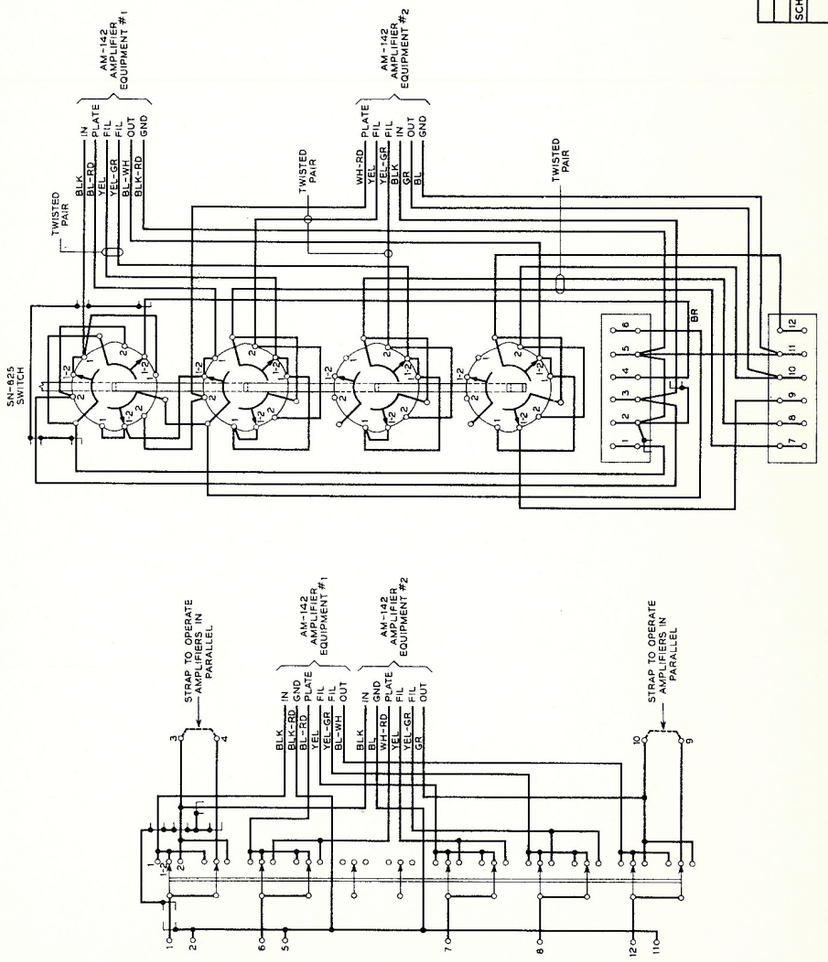

NS-125

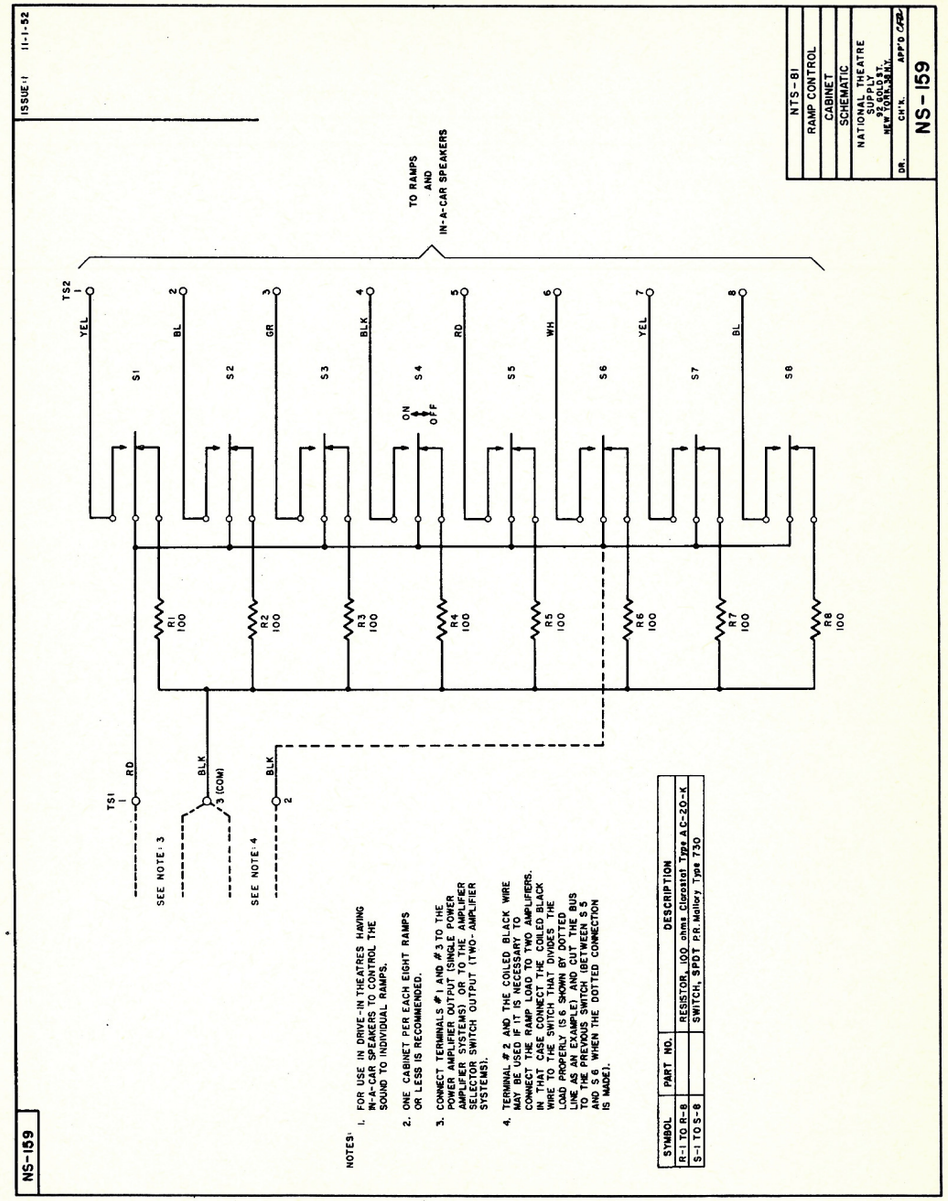

NOTES:

1. FOR USE IN DRIVE-IN THEATRES HAVING IN-A-CAR SPEAKERS TO CONTROL THE SOUND TO INDIVIDUAL RAMPS.
2. ONE CABINET PER EACH EIGHT RAMPS OR LESS IS RECOMMENDED.
3. CONNECT TERMINALS #1 AND #3 TO THE POWER AMPLIFIER OUTPUT (SINGLE POWER AMPLIFIER SYSTEMS) OR TO THE AMPLIFIER SELECTOR SWITCH OUTPUT (TWO-AMPLIFIER SYSTEMS).
4. TERMINAL #2 AND THE COILED BLACK WIRE MAY BE USED IF IT IS NECESSARY TO CONNECT THE RAMP LOAD TO TWO AMPLIFIERS. IN THAT CASE CONNECT THE COILED BLACK WIRE TO THE SWITCH THAT DOES THE LOAD PROPERLY, AS SHOWN BY DOTTED LINE AS AN EXAMPLE) AND CUT THE BUS TO THE PREVIOUS SWITCH (BETWEEN S5 AND S6 WHEN THE DOTTED CONNECTION IS MADE).

SYMBOL	PART NO.	DESCRIPTION
R-1 TO R-8		RESISTOR, 100 ohms Clarostat Type A-C-20-K
S-1 TO S-8		SWITCH, SPDT P.R. Mallory Type 730

1. DESCRIPTION.

The SH-2100 is a 6' length of SN-928 Coaxial Cable with a capacity of 8 mmf per foot enclosed in flexible metal tubing for mechanical protection. Flexible conduit connectors are provided at each end for installation purposes.

The SN-928 consists of low capacity ceramic beads strung on a stranded conductor and covered by a closely woven tinned copper shield, which is in turn covered by oil proof tape and an impregnated woven cotton braid. Each end of the shield is terminated in lugs for shield connections.

2. INSTALLATION.

A. Install the SH-2100 per Figures 1 and 2.

Caution: Unpack, handle and install the coaxial cable carefully, as sharp bends or kinks may damage it and make replacement necessary. DO NOT SHORTEN THE CABLE.

B. Strap the cable on the front wall 8" to the left of and 2" below the AM-101 using a "BX" strap per the system conduit layout. Adjust the loop so that the cable does not bind when the cover is closed and is not under tension when the cover is open. Strap the cable again on the center line of projection.

C. Strap the cable to the bracket mounted below the sound mechanism per Equipment Instruction "SH-1000 Sound Mechanism".

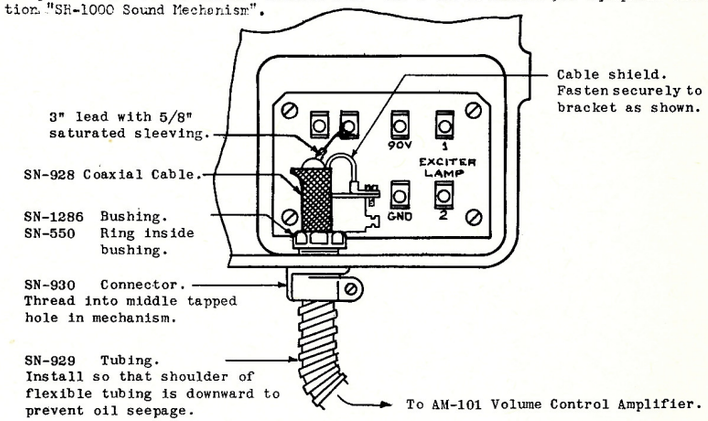

FIGURE 1. INSTALLATION OF SH-2100 IN SH-1000 SOUND MECHANISM

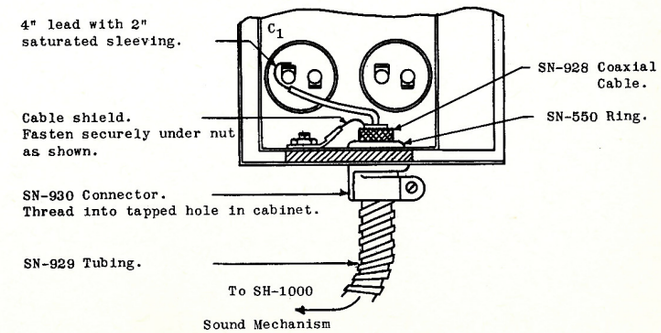

FIGURE 2. INSTALLATION OF SH-2100 IN AM-101 VOLUME CONTROL AMPLIFIER

Printed in U. S. A.

1. DESCRIPTION

The SH-2103 is an 80 inch length of a special oil proof coaxial cable (approximately 40.0 mmf capacity per foot) and two flexible oil proof wires in a flexible metal tubing with a flexible conduit connector at each end. It couples the sound mechanism to the volume control amplifier, which should be located so that the coaxial cable can be properly installed and connected.

2. INSTALLATION

The SH-2103 is shipped unassembled. EW-652 Sleeving is included. The method of assembly and installation is as follows:

A. Prepare the SN-1101 Coaxial Cable carefully per Figure 1.

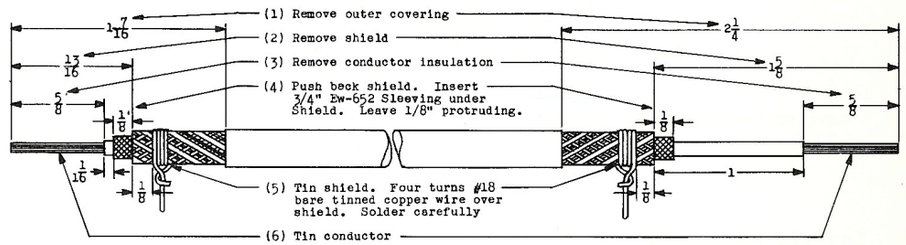

FIGURE 1

B. Assemble the coaxial cable per Figure 2

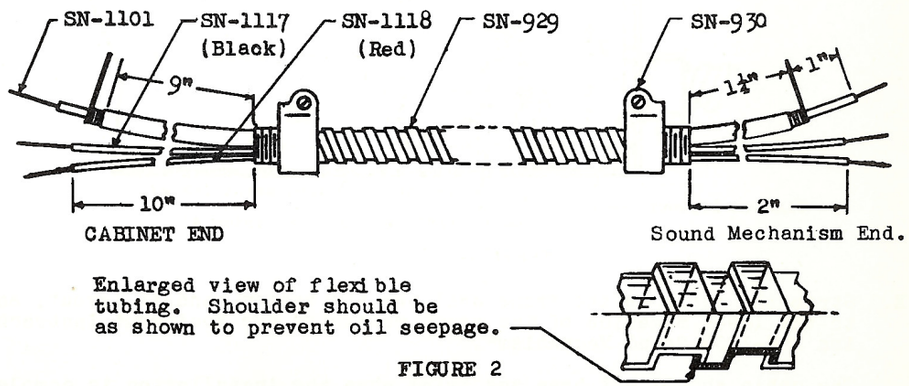

FIGURE 2

Issued by
Engineering Department
Printed in U. S. A.
September 3, 1948
Issue #2

C. Install and connect in each sound mechanism per Figure 3 and the system wiring diagram.

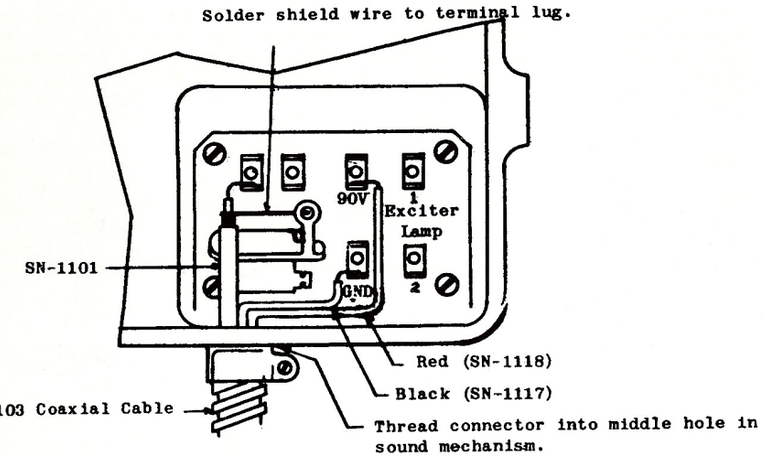

FIGURE 3

D. Install and connect in the volume control amplifier per Figure 4 and the system wiring diagram.

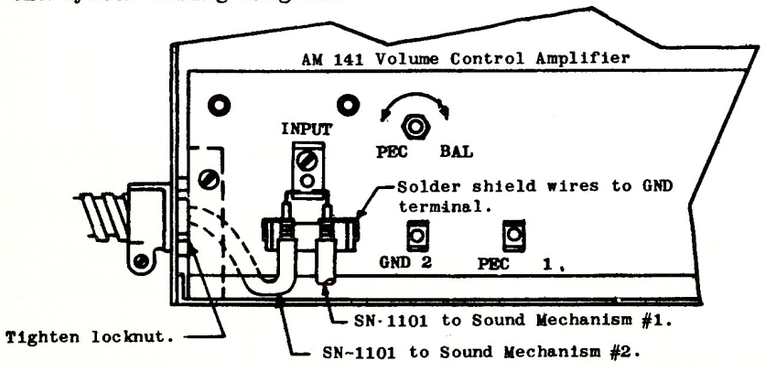

FIGURE 4

E. Strap the cable on the front wall per the system conduit layout, and to the lower magazine of the sound mechanism per Equipment Instruction "SH-1000 Sound Mechanism".

The cable should not have any twist when the installation is complete.

1. #8401 BELDEN MICROPHONE CABLE (to be obtained locally), instead of the standard coaxial cable, should be used to connect the sound mechanism output to the input of the volume control amplifier(s) on the Projection Room front wall in all concealed conduit installations. This cable should likewise be used in exposed conduit installations when front wall conditions necessitate the mounting of the volume control amplifier(s) in such a location that a cable longer than the standard coaxial cable is required. The cable should be enclosed in 3/8" flexible conduit (when the AM-141 Amplifier Equipment is supplied add two #16 BRC wires), and the cable shield soldered to the terminal lugs in the sound mechanism and volume control amplifier. Other wiring and connections should be made per the system wiring diagrams. The recommended installation methods for Simplex Pedestals are described in the following sections.

2. EQUIPMENT MOUNTING - CONCEALED CONDUIT INSTALLATIONS - The AM-101 Volume Control Amplifier, AM-2023 and AM-2033 Cabinets and LU-1024 Monitor Loudspeaker may be partially recessed in the wall for concealed conduit installation, and the conduit brought into the knockouts in the sides and bottom of the cabinets (see Figures 1 and 2) or they may be surface mounted and conduits brought into knockouts in the back or into a surface outlet box mounted below the cabinet (see Figure 3).

   The AM-141 Volume Control Amplifier and AM-142 Amplifier Equipment are surface mounted, and concealed conduits may be brought into knockouts in the back or into a surface outlet box mounted below the cabinets.

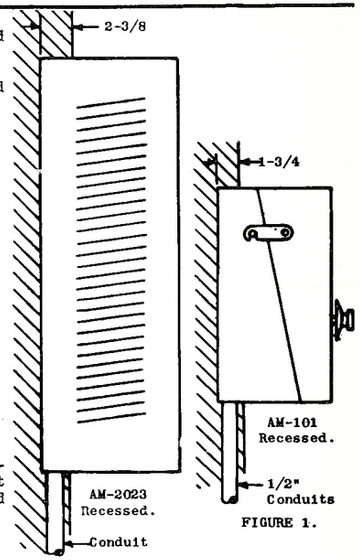

FIGURE 1.

FIGURE 2.

3. AM-101 VOLUME CONTROL AMPLIFIER - Figure 3 shows the concealed conduit installation, wiring and method of connections for surface mounting using an outlet box. Refer to Figure 1 for recessed installation, and Figures 9, 10 or 11 for concealed conduit connections to the sound mechanism. When #8401 Belden Microphone Cable is substituted for SH-2100 Coaxial Cable, a compensating capacitor (supplied by the customer) should, due to the difference in capacity of the two cables, be connected across R_7 in the cathode circuit of VT_2 in each AM-1000 Volume Control Amplifier per Figure 4 in order to obtain the frequency response characteristics shown

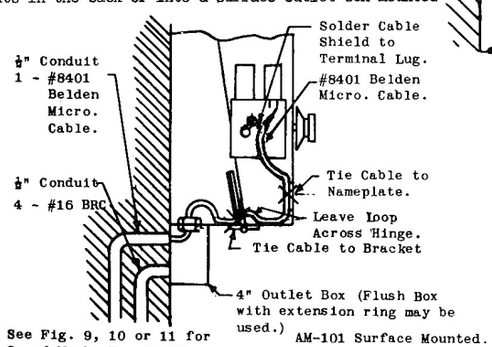

FIGURE 3

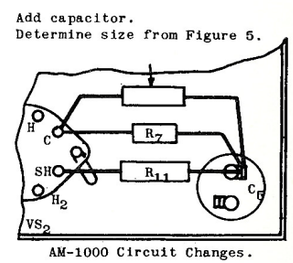

AM-1000 Circuit Changes.

FIGURE 4.

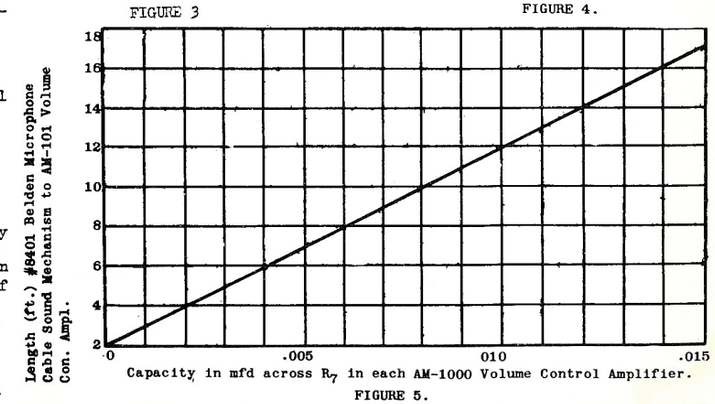

FIGURE 5.

on Drawing SC-21. Since the value of the capacitor connected across R7 depends upon the amount of #8401 Cable used, the length used for each projector should be carefully measured and the value of the capacitor required determined from Figure 5. Standard mica capacitors of 0.010 and 0.002 mfd. connected in parallel may be used.

4. AM-141 VOLUME CONTROL AMPLIFIER - Figure 6 shows the concealed conduit installation, wiring and connection methods. Refer to Figures 9, 10 or 11 for concealed conduit connections to the sound mechanism.

When #8401 Belden Microphone Cable is substituted for SN-1101 Coaxial Cable, a compensating capacitor (supplied by the customer) should, due to the difference in capacity of the two cables, be substituted for C_4 in the warping circuit of the AM-1011 Amplifier in the AM-142 Amplifier Equipment per Figure 7 in order to obtain the frequency response characteristics shown on drawing SC-43.

Since the value of the capacitor substituted for C_4 depends upon the amount of #8401 Cable used, the length used for each projector should be carefully measured and the value of the capacitor determined from Figure 8. For example, if the length required per projector is 14 feet, the capacitor required is .00033 mfd. Standard mica capacitor(s) should be used.

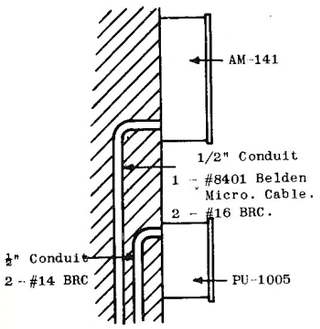

FIGURE 6.

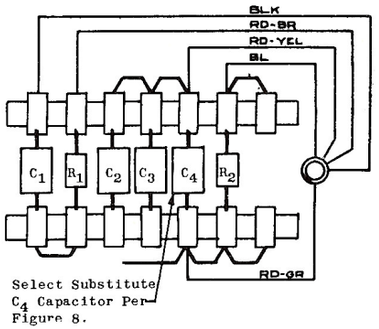

AM-1011 Amplifier Warping Circuit.

FIGURE 7.

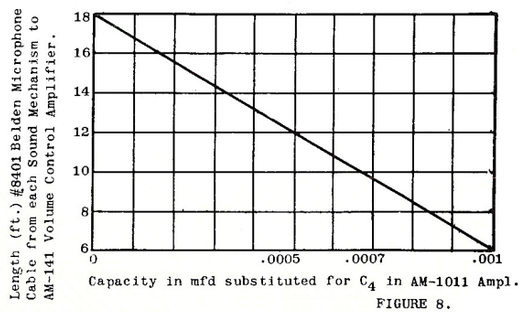

FIGURE 8.

5. SUPER SIMPLEX PEDESTALS - Figure 9 shows concealed conduit installation and wiring. The 3/8" flexible conduits from the sound mechanism to the pedestal should be about two feet long, depending upon the projection angle, and should have a sufficient loop to prevent oil from running into the outlet box in the pedestal. The switch cover plate on this box should be replaced by a flat plate built by the customer per Figure 9A. The Belden Cable between the sound mechanism and the pedestal outlet box should be covered with 5/16" I.D. Oil Proof Cambric Tubing (supplied by the customer). Refer to Figure 3 or Figure 6 for the conduit connections to the AM-101 Volume Control Amplifier or AM-141 Volume Control Amplifier and PU-1005 Power Unit.

6. TYPE "L" SIMPLEX PEDESTAL - Figure 10 shows the concealed conduit installation and wiring. A 4" outlet box should be mounted on the T-slot on the pedestal, and the 3/8" flexible conduits from the sound mechanism and the concealed conduits from the front wall terminated therein. The 3/8" flexible conduits should be approximately 18" long, depending upon the projection angle, and should have a sufficient loop to prevent oil from entering the outlet box. The Belden Cable between the sound mechanism and outlet box should be covered with 5/16" I.D. Oil Proof Varnished Cambric Tubing (supplied by the customer). Refer to Figure 3 or Figure 6 for the conduit connections to the AM-101 Volume Control Amplifier or AM-141 Volume Control Amplifier and PU-1005 Power Unit.

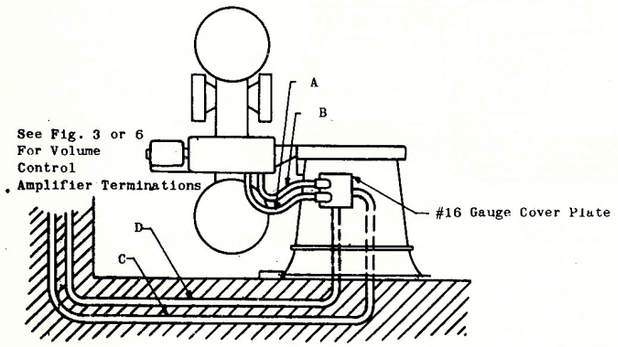

CONDUIT	WIRING AM-101	WIRING AM-141
A 3/8" Flex. Cond.) C 1/2" Conduit)	1 - #8401 Belden Micro. Cable*	1 - #8401 Belden Micro. Cable* 2 - #16 BRC
B 3/8" Flex. Cond.) D 1/2" Conduit)	4 - #16 BRC	2 - #14 BRC

* Cover with 5/16" I.D. Varnished Cambric Tubing between mechanism and pedestal.

FIGURE 9

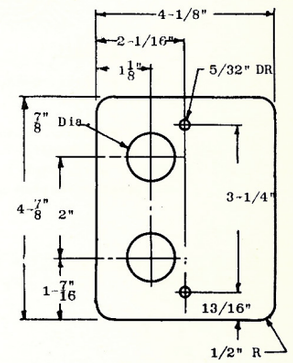

FIGURE 9-A

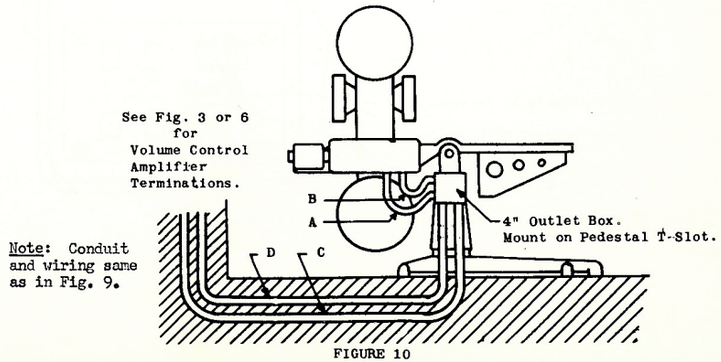

Note: Conduit and wiring same as in Fig. 9.

FIGURE 10

Issued by
Engineering Department
Printed in U. S. A.
August 15, 1949
Issue #1

7. TYPE "R" AND "M" PEDESTALS - Figure 11 shows the concealed conduit installation and wiring. The conduits from the front wall should terminate in a 4" outlet box to which the 3/8" flexible conduits from the sound mechanism should also connect. These flexible conduits should be 18" to 24" long, depending on the angle of projection, and should have a sufficient loop to prevent oil from entering the outlet box. The Belden Cable between the sound mechanism and outlet box should be covered with 5/16" I.D. Oil Proof Varnished Cambric Tubing (supplied by the customer). Refer to Figure 3 or Figure 6 for the conduit connections to the AM-101 Volume Control Amplifier or AM-141 Volume Control Amplifier and PU-1005 Power Unit.

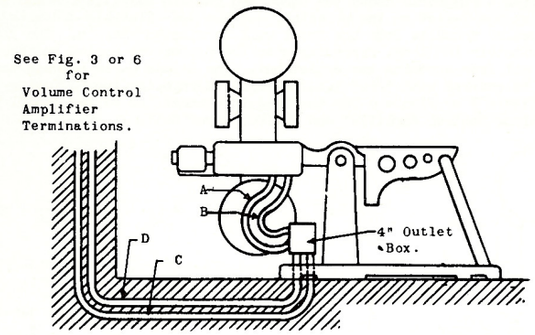

CONDUIT		WIRING AM-101	WIRING AM-141
A	3/8" Flex. Conduit)	1 - #8401 Belden Micro. Cable*	1 - #8401 Belden Micro. Cable*
C	1/2" Conduit)		2 - #16 BRC
B	3/8" Flex. Conduit)	4 - #16 BRC	2 - #14 BRC
D	1/2" Conduit)		

*Cover with 5/16" I.D. Varnished Cambric Tubing between mechanism and pedestal.

FIGURE 11.

8. SOUND MECHANISM CONNECTIONS - Figure 12 shows the method of connecting the microphone cable in the sound mechanism. Exciter lamp, 90 volt, and ground wires should be run and connected per the system wiring diagram.

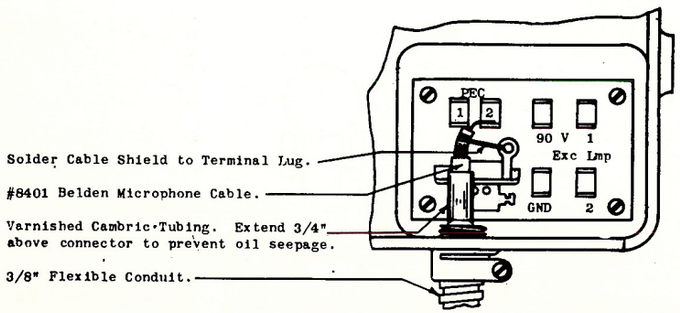

FIGURE 12

1. DESCRIPTION

The AP-17-1 Test Track, made available by the Academy of Motion Picture Arts and Sciences, affords an accurate means of checking the uniformity of illumination across the scanning slit and the adjustment of the lateral guide roller assembly in Simplex Sound Mechanisms to obtain uniform optimum sound track illumination. The test track is 230 feet long, containing 17 approximately equally spaced 1000 cycle tracks, each with an amplitude of 6.8 mils ± 1.6%. Track #1 is on the outside nearest the sprocket holes, and track #17 on the inside toward the center of the film. The tracks are so placed longitudinally on the film that only one is scanned at a time, and each track is identified before scanning. Tracks #1, 2, 16 and 17 fall outside a correctly adjusted scanning system using an 84 mil slit, so that only tracks 3 to 15 inclusive will be reproduced at full output. The maximum allowable variation in output is 3 db, that is, a tolerance of ± 1.5 db.

2. PREPARATORY PROCEDURE

In view of the precise adjustments obtainable with the Standard Scanning Illumination Test Track, it is desirable that preliminary tests and adjustments of the components be made before this test track is used. The adjustment of the PU-1000 Power Unit is extremely important and should be carefully made.

A. PU-1000 Power Unit. When this power unit is used the DC output should be carefully adjusted per Equipment Bulletin "PU-1000 Power Unit" so that the current supplied to the "ON" exciter lamp is 4 amperes DC.

B. PU-1005 Power Unit. When this power unit is used be sure the exciter lamp current is 7.0 amperes AC.

C. Exciter Lamp. The exciter lamp in each sound mechanism should be adjusted per Equipment Bulletin "SH-1000 (SH-1001) Sound Mechanism" so that the exciter lamp filament is centered horizontally and vertically on the slit in the lens tube.

D. Optical System. The lens tube and reflector lens should be adjusted per Equipment Bulletin "SH-1000 (SH-1001) Sound Mechanism". Adjustment of the lens tube should be made using the Academy 7000 or 9000 Cycle Film or ED-20 Test Film, and the warping circuit in the power amplifier changed temporarily during this adjustment in accordance with the Tuning Up Instructions for the particular system.

Positioning the reflector lens as close as possible to the film without interfering with the scanning drum has usually been found to give the best performance. The spot of light on the cathode of the photo-electric cell should be properly centered, and when this spot is adjusted to its maximum diameter it usually covers the entire width of the cathode. The exciter lamp, lens tube lenses, reflector lens and photo-electric cell should be carefully cleaned with lens tissue.

E. Lateral Guide Roller Assembly. Check the adjustment of the lateral guide roller assembly, run the Academy Buzz Track Film and adjust the roller as necessary per Equipment Bulletin "SH-1000 (SH-1001) Sound Mechanism" to eliminate frame line and sprocket hole noise. Final precise adjustment of the guide roller should be made with Standard Scanning Illumination Test Track per Section 3.

F. Photo-electric Cell. Be sure that normal PEC voltage is being supplied to each photo-electric cell and that the cell is firm in its socket. In systems using the AM-101 Volume Control Amplifier the voltage should be measured between the "PEC" and "Ground" terminals of the AM-101. In the Type "E" System it should be measured between the "90V" and "Ground" terminals of the AM-141 Volume Control Amplifier, the voltage supplied to the cells being adjustable, for output equalization, by a potentiometer connected between the "90V" terminal and the photo-electric cells of the two machines. Voltage readings are tabulated below, the vacuum tube voltmeter reading being the actual voltage. The readings using the 1000 ohm per volt voltmeter are lower due to the extra current drain of the meter.

	SYSTEM A-15, A-30, B-30, B-60, C-60	TYPE "E"
Vacuum tube voltmeter	84 volts	90 volts
1000 ohm per volt voltmeter, 100 volt scale	60 volts	65 volts

3. METHOD OF USE

A. Thread the Standard Scanning Illumination Test Track in the mechanism in the regular way.

B. Connect a volume indicator across the output of the power amplifier (AM-1001 or AM-142) and disconnect the stage speakers. In systems having LU-1002, LU-1003, or LU-1026 Networks, the volume indicator should be plugged into the network panel jack, which is connected across the amplifier output. The stage speakers should be disconnected by setting the "HF" and "LF" switches on the network panel in the "OFF" position which properly terminates the amplifier for volume indicator measurements.

In the Type "E" System the stage speaker load should be disconnected from the AM-142 Amplifier by removing the amplifier output lead (blue wire) from the amplifier "Output" terminal. The volume indicator should be connected to the blue wire and "ground" terminal, and a 12 ohm resistor of at least 10 watts capacity connected in parallel with the volume indicator to properly terminate the amplifier.

C. Run the test track and plot all volume indicator readings. If the maximum and minimum readings for tracks 3 to 15 inclusive differ by more than 3 db., lateral adjustment of the exciter lamp and/or lateral guide roller assembly is necessary until these readings are within the limits specified above.

Uneven illumination, caused by lateral displacement of either the exciter lamp or lateral guide roller assembly from optimum position, or vertical displacement of the exciter lamp from optimum position, may cause distortion and decrease the output level. However, the optical system and exciter lamp used in Simplex Sound Mechanisms have been especially designed so that moderate displacement of the exciter lamp from optimum position has a minimum effect on illumination.

In the optical system used, the condenser lens forms an image of the light source in the objective lens, a mechanical slit is placed close to the condenser lens, and since the aperture of the condenser lens is circular the useful portion of the light source is limited in width to the diameter of the objective lens.

Other optical systems wherein the light source is imaged in the plane of the mechanical slit, which is in turn imaged on the film plane, or which consist of cylindrical lenses wherein the smaller dimension of the source is imaged directly on the film, exciter lamps of different design are necessary. In the former of these two optical systems the light source is of the same general proportions as the slit, and the vertical adjustment is extremely critical. In the latter case coil filaments of approximately the same proportions are used, but the diameter and horizontal alignment of the coil must be held to close limits for optimum results.

D. If track 3 is below the lower limit, its illumination is inadequate and the exciter lamp bracket should be moved outward carefully and/or lateral guide roller assembly moved inward. Adjustments of both exciter lamp and lateral guide roller assembly should be made to be sure that the optimum position of both is obtained.

E. If track 15 is below the lower limit, its illumination is inadequate and the exciter lamp bracket should be moved inward carefully and/or lateral guide roller assembly moved outward. Adjustments of both the exciter lamp and lateral guide roller assembly should be made to be sure that the optimum position of both is obtained.

F. One of the middle tracks may occasionally be below the lower limit. If such a condition is encountered, the exciter lamp should be inspected carefully as a sagging filament is indicated.

G. The above tests should be made on each machine and until all readings taken on tracks 3 to 15 inclusive are within the specified limits. This test track is an accurate means of adjustment, and extreme care should be taken in making the test and any necessary adjustments.

Supersedes Networks, LU-1002 1003, 1003-X, 1026, Issue 1, June 25, 1941

1. PHYSICAL DIMENSIONS & ELECTRICAL CHARACTERISTICS

CODE NUMBER	IMPEDANCE INPUT	IMPEDANCE OUTPUT L.F.	IMPEDANCE OUTPUT H.F.	CROSSOVER FREQUENCY	APPROXIMATE WEIGHT LBS.	DIMENSIONS	DRAWINGS
LU-1002	12	12	12	400	19	8-1/2" H x 17" W x 10" D	WD-116
LU-1003	6	6	6	400	24	8-1/2" H x 17" W x 10" D	WD-117
LU-1003-X	6	6	6	400	24	8-1/2" H x 17" W x 10" D	WD-200
LU-1026	12	6	12	400	37	8-1/2" H x 17" W x 10" D	WD-124
LU-1047	12	12	12	800	5-1/4	7"H x 5-3/8" W x 6-1/4"D	E.B. 40.21
LU-1084	12	12	12	500	24	8-1/2" H x 17" W x 10" D	WD-1012

2. DESCRIPTION

Each of these networks, except LU-1047 (See E. B.) is a two-way parallel type dividing network on a chassis. A terminal strip on an external cable form is provided for external connections. Two switches (for stage loudspeaker testing, frequency response measurements and emergency operation), a monitor volume control rheostat, and a jack for headset monitoring or frequency response measurements are mounted on the front panel. A vacuum tube socket, into which an AM-1003 Monitor Amplifier may be plugged, and a monitor amplifier "ON"-"OFF" switch are on the chassis. Adjustable L-Pad resistors are provided in the H.F. speaker circuit for use in tuning-up.

3. INSTALLATION

These networks, except LU-1047 (See E.B.) should be installed in the AM-2023 Cabinet as shown on the system conduit layout drawing and connections made to the terminal strip per the system wiring diagram. The heater and plate supply leads for the monitor amplifier where used should be connected when the network is installed so that the monitor amplifier may be mounted without delay.

A. H.F. Speaker L-Pad Resistors, providing adjustable attenuation in the H.F. speaker circuit, may be adjusted as required per the associated drawing to obtain optimum balance between H.F. and L.F. speakers.

B. Frequency Response Measurements. With the "H.F." and "L.F." switches in the "OFF" position, plug the V.I. into the jack on the front panel. This terminates the AM-1001 Amplifier(s) into the following impedances on the input of the network as indicated.

LU-1002	12 ohms
LU-1003 or LU-1003X	6 or 12 ohms *
LU-1026	6 or 12 ohms *
LU-1084	6, 12 or 24 ohms *

* Two 12 ohms resistors are provided in LU-1003, LU-1003-X, LU-1026 and LU-1084 Networks. Wire these resistors to match recommended load impedance of amplifier combination under test.

Note: Where the LU-1047 Network is installed, disconnect output lead and terminate amplifier with a 12 ohm external resistor .

4. OPERATION (These facilities are not provided in the LU-1047 Network)

Normal. Set the "H.F." and "L.F." switches in "ON" position. Set the "Monitor Ampl". switch in "ON" position when the AM-1003 Monitor Amplifier is used. If the monitor amplifier is not used, set this switch in "OFF" position.

Emergency. In case of failure of the high frequency stage speaker(s), set the "H.F." switch in "OFF" position and the "L.F." switch in "ON" position. The network is then disconnected, and the L.F. speaker(s) operates across the full output of the AM-1001 Amplifier(s).

Stage Speaker Testing. The stage speakers may be tested as follows, and if the reproduction indicates a defective unit it should be replaced at once:

Issued by
Engineering Department
Printed in U. S. A.

March 5, 1948
Issue #1

4. (cont'd.)

(1) H.F. Speakers. Set the "H.F." switch in "ON" position and the "L.F." switch in "OFF" position. This permits testing of a single speaker where used or of the H.F. speakers as a group. To test each speaker separately, lift each of the external connections to the H.F. terminals of the network.

(2) L.F. Speakers. Set the "L.F." switch in "ON" position, and the "H.F." switch in"OFF" position. This permits testing of a single speaker where used or of the two L.F. speakers as a group. To test each speaker separately, lift each of the external connections to the L.F. terminals of the network.

NOTE: Where 4 L.F. speakers are installed, 2 of the 4 may be tested as a group by lifting each of the external connections to the L.F. terminals of the network.

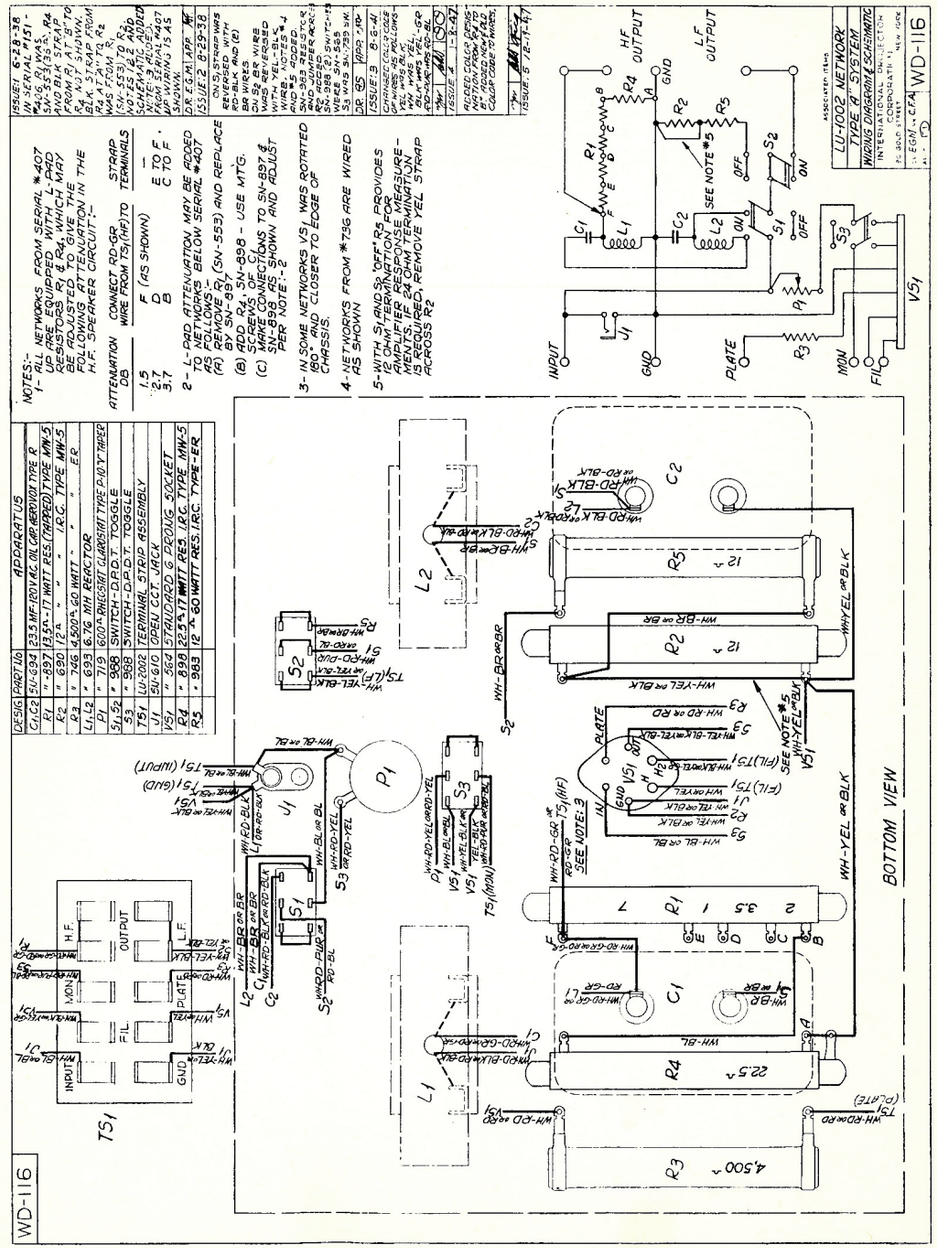

Printed in U.S.A.

ALTEC SERVICE CORPORATION
Simplex

LU-1003 NETWORK

WD-117

DESIG	PART No	APPARATUS
		LU-1003 NETWORK
C1,2,3,4	SU-694	23.5 MF - 120 V CAP. AEROVOX TYPE R
R1	" -899	6.75Ω 17 WATT TAPPED RES. TYPE MW-5
R2,R5	" -690	12Ω 17 WATT RES. I.R.C. TYPE MW-5
R3	" -746	4,500Ω 60 WATT RES. I.R.C. TYPE ER
L1, L2	" 783	3.35 MH REACTOR
P1	" 719	20Ω RHEOSTAT CLAROSTAT MODEL P-10 "V" TAPER
J1	" 610	OPEN CCT JACK
S1-S2	" 455	D.P.D.T. SWITCH
S3	" 739	D.P.D.T. SWITCH (TOGGLE)
T51	LU-2002	TERMINAL STRIP ASSEMBLY
T52	SU-638	TERMINAL STRIP
V51	" 561	STANDARD 6 PRONG SOCKET
R4	" -900	11.25Ω 17 WATT RES. I.R.C. TYPE MW-5

ISSUE-1 7-3-39
P1 & R4 IN SERIAL # 151 - 186 INCLD WERE #5 FOLLOWS:-
C1 .02 BLK T52 (11)
SU-553 3Ω A 36 Ω B
R4
FROM SERIAL # 187 UP R1 & R4 CHANGED AS SHOWN. NOTE 2 & 3 ADDED SCHEMATIC WAS NOT SHOWN. NOTE 4 ADDED
OK E.G.M. 7-3-39
ISSUE-2 9-20-39
LU-1002 SWITCH REMOVED. NOTES 1, 2 & 3 WERE 2, 3 & 4 RESPECT.
OK E.G.M. 9-20-39
ISSUE-3 12-15-39

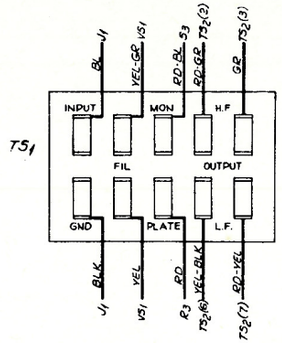

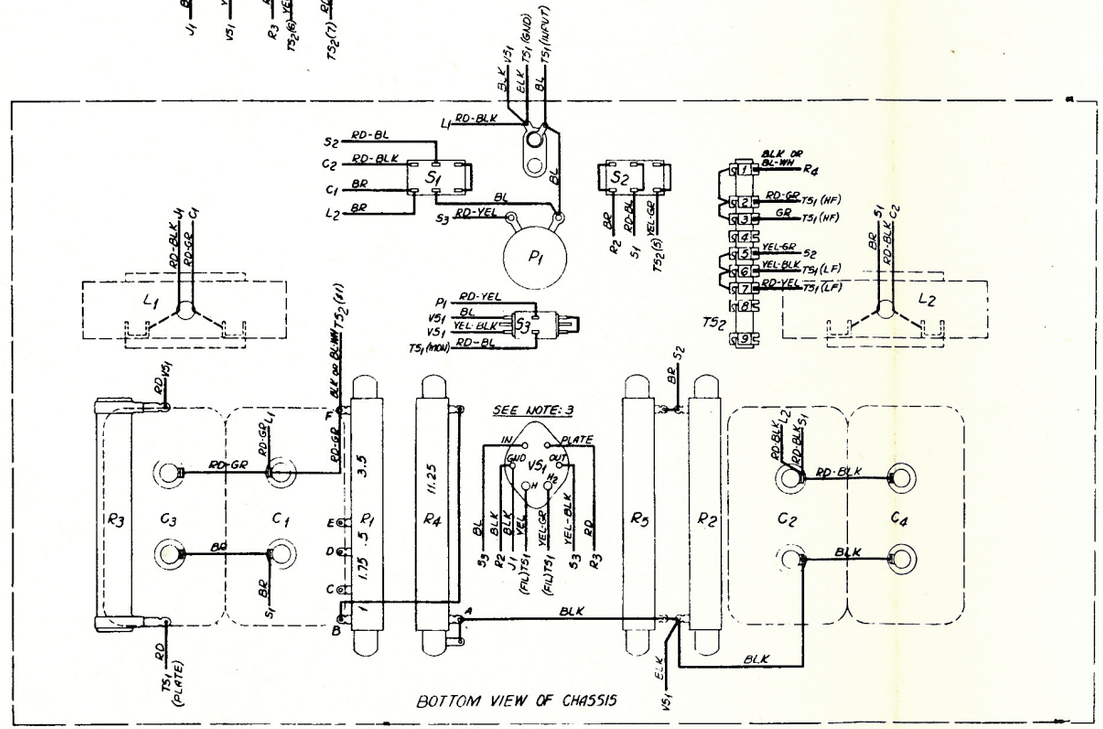

NOTES:-
1- ALL NETWORKS FROM SERIAL # 187 UP ARE EQUIPPED WITH L-PAD RESISITORS R1 & R4, WHICH MAY BE ADJUSTED TO GIVE THE FOLLOWING ATTENUATION IN THE H.F. SPEAKER CIRCUIT:-

ATTENUATION DB	CONNECT BLK OR BL-WH WIRE FROM T52 #1 TO	STRAP TERMINALS
1.5	F (AS SHOWN)	
2.7	D	E TO F
3.7	B	C TO F

2 - L-PAD ATTENUATORS MAY BE ADDED TO NETWORKS BELOW SERIAL # 187 AS FOLLOWS:-
(A) REMOVE R1 (SU-553) AND REPLACE BY SU-899
(B) REMOVE R4 (SU-553) AND REPLACE BY SU-900
(C) MAKE CONNECTIONS TO SU-899 AND SU-900 AS SHOWN AND ADJUST PER NOTE - 2.

3 - IN SOME NETWORKS V51 WAS ROTATED 180° AND CLOSER TO EDGE OF CHASSIS.

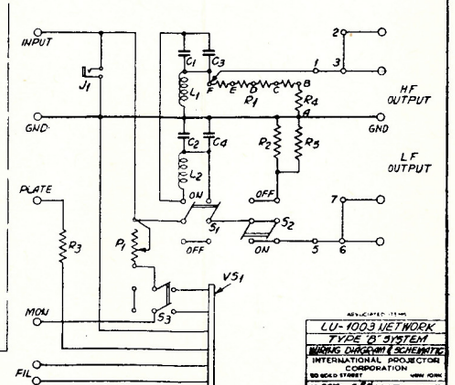

LU-1003 NETWORK
TYPE "A" SYSTEM
WIRING DIAGRAM & SCHEMATIC
INTERNATIONAL PROJECTOR CORPORATION
WD-117

WD-200

REDRAWN FROM ISSUE:2 WITH EXTENSIVE CHANGES

ISSUE:3 6-11-48

DESIG	PART NO	APPARATUS
C1 TO 4	SN-694	CAPACITOR, 23.5 MFD 120 V
J1	SN-610	JACK, OPEN CCT.
L1 & L2	SN-785	REACTOR, 3.35 MH
P1	SN-719	RHEOSTAT, 600 Ω, 4 WATT WIRE WOUND
R1 & R4	SN-900	RESISTOR, 11.25 Ω, 17 WATT
R2 & R5	SN-983	RESISTOR, 12 Ω, 60 WATT
R3	SN-746	RESISTOR, 4500 Ω, 60 WATT
R6 & R7	SN-897	RESISTOR, 13.5 Ω, 17 WATT
S1, 2 & 3	SN-988	SWITCH, D.P.D.T. TOGGLE
TS1	LU-2024	TERMINAL STRIP, INPUT
TS2	LU-2025	TERMINAL STRIP, OUTPUT
TS3	SN-638	TERMINAL STRIP, (2 REQ.)
VS1	SN-564	SOCKET, 6 PRONG

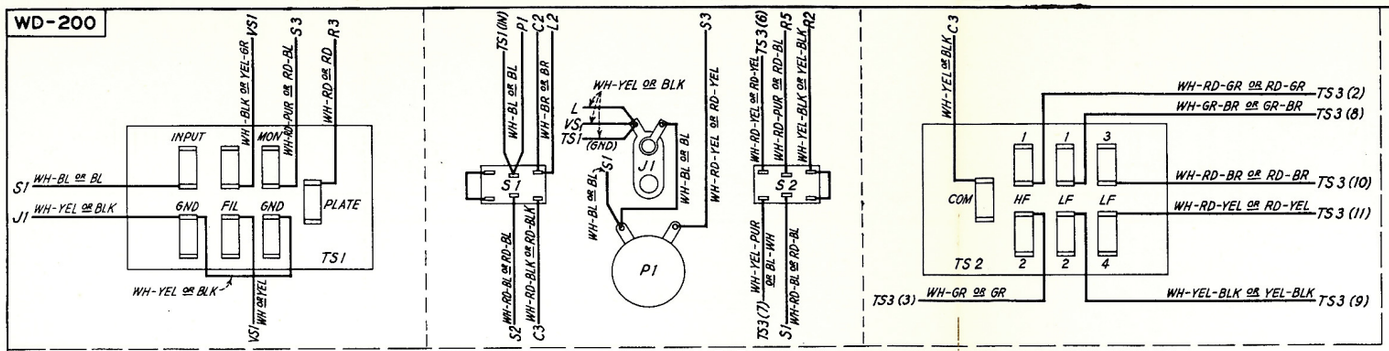

WIRING DIAGRAM
(WIRING SIDE OF CHASSIS)

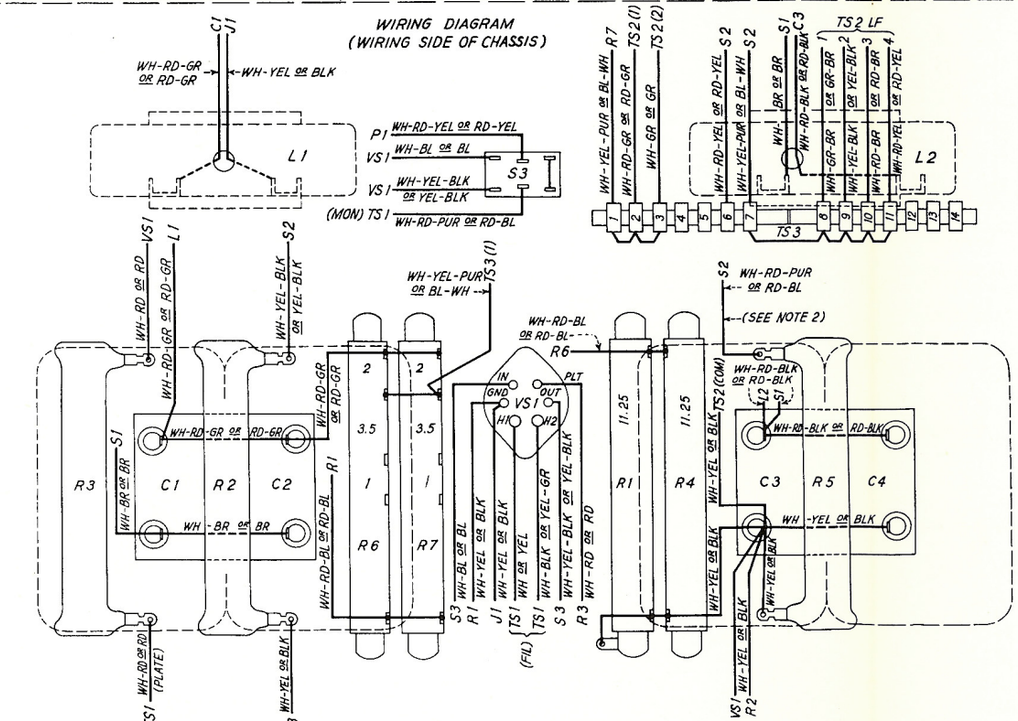

SCHEMATIC

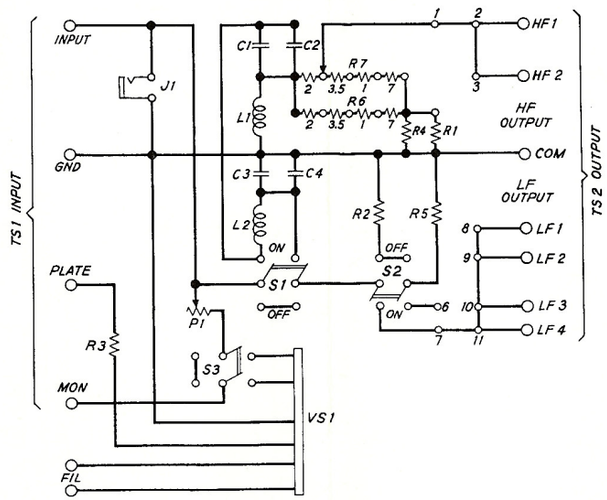

NOTES:

1. RESISTORS R1, R4, R6 AND R7 PROVIDE AN ADJUSTABLE L-PAD ATTENUATOR IN THE HF SECTION OF THE NETWORK FOR HF AND LF SPEAKER BALANCING. CONNECTIONS TO R6 AND R7 PER FIG. A TO D GIVE THE ATTENUATIONS IN THE HF SECTION SHOWN BELOW.

R6 AND R7 CONNECTIONS	ATTENUATION - DB PERMANENT MAGNET SPEAKERS	ENERGIZED FIELD SPEAKERS
FIG. A	3.2 (SHIPPED)	2.9
FIG. B	4.2	4.2
FIG. C	5.0	5.3
FIG. D	6.3	6.0

2. FOR FREQUENCY RESPONSE MEASUREMENTS SWITCHES S1 AND S2 ARE SET IN "OFF" POSITION. THE POWER AMPLIFIERS ARE THEN TERMINATED IN 6 OHMS BY R2 AND R5 IN PARALLEL. IF A 12 OHM TERMINATION IS REQUIRED DISCONNECT THE WH-RD-PUR OR RD-BL WIRE FROM R5 DURING THE MEASUREMENTS. THE AMPLIFIER OUTPUT TRANSFORMER CONNECTIONS SHOULD BE CHECKED TO DETERMINE THE PROPER MATCHING IMPEDANCE.

*ADD STRAP WHEN SPEAKERS ARE ENERGIZED

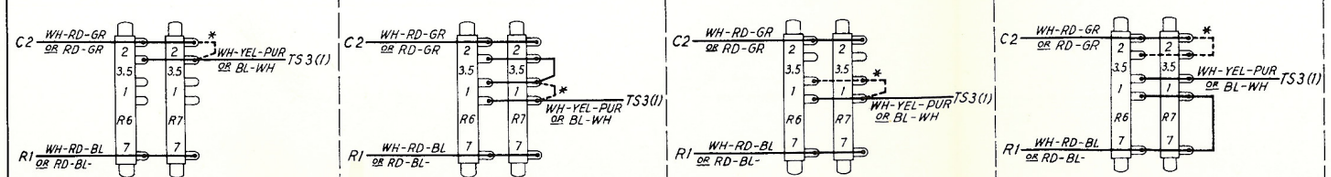

LU-1003-X NETWORK
SCHEMATIC & WIRING DIAGRAM

INTERNATIONAL PROJECTOR CORPORATION
35 LA FRANCE AVENUE
BLOOMFIELD NEW JERSEY

DR. CH'K. APP'D.

WD-200

ALTEC SERVICE CORPORATION
Simplex

LU-1026 NETWORK

WD-124

ISSUE: 1 11-4-58

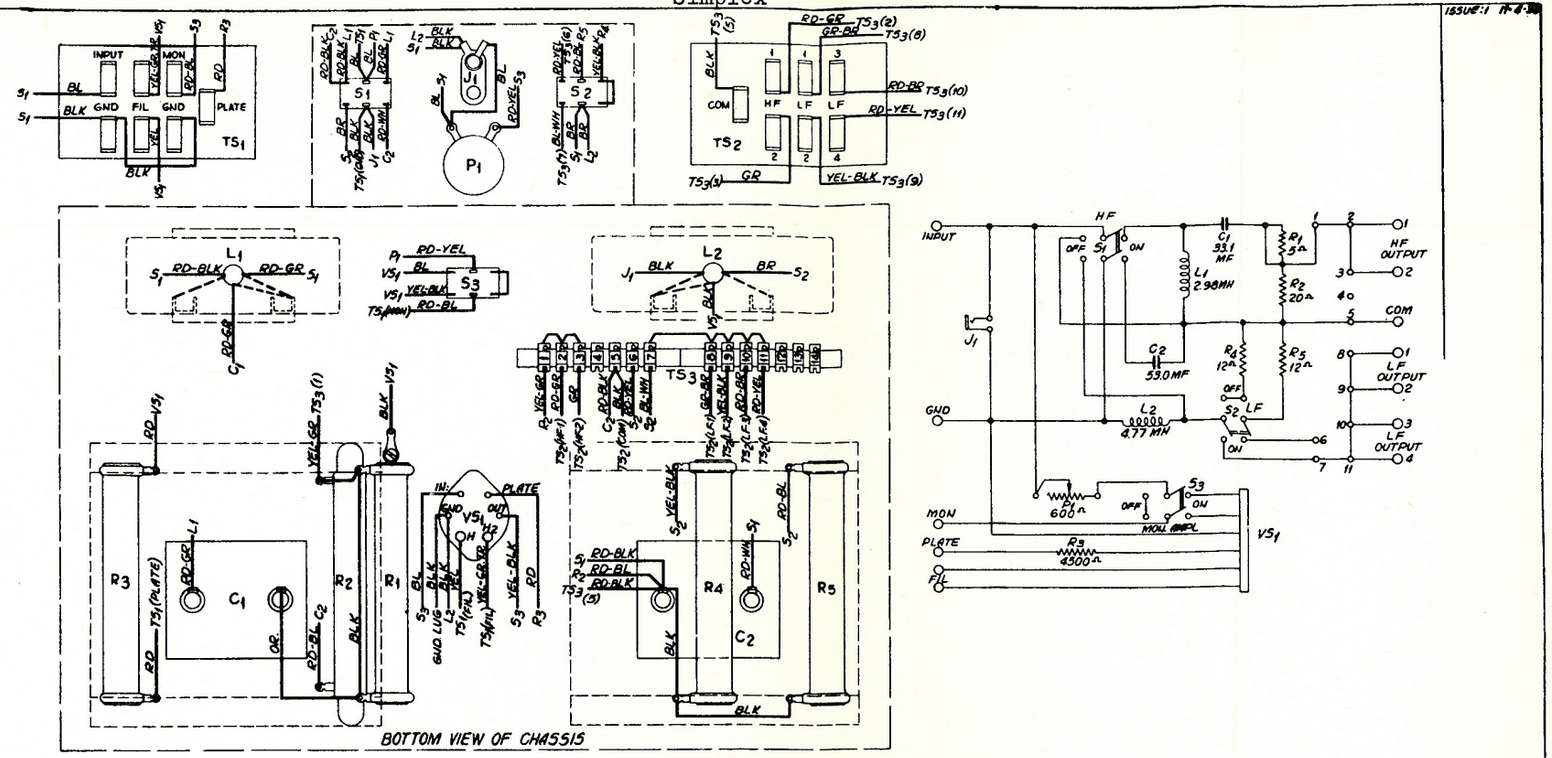

DESIG.	PART No.	APPARATUS
C_1	SW-923	CAPACITOR - 93.1 MF.
C_2	" 943	CAPACITOR - 53.0 MF.
P_1	" 982	RESISTOR - 5Ω
R_2	" 984	RESISTOR - 20Ω 17 WATT
R_3	" 746	RESISTOR - 4500Ω - 60 WATT
R_4, R_5	" 963	RESISTOR - 12Ω
L_1	" 975	REACTOR - 2.98 MH
L_2	" 976	REACTOR - 4.77 MH
S_1, S_2, S_3	" 988	D.P.D.T. SWITCH
J_1	" 610	OPEN CCT. JACK
VS_1	" 564	SOCKET
TS_1	LU-2024	TERM. STRIP - INPUT
TS_2	LU-2025	TERM. STRIP - OUTPUT
TS_3	SW-971	TERM. STRIP - (2 REQUIRED)
P_1	" 719	RHEOSTAT - 600Ω

NOTE:-
R_1 AND R_2 FOR A 4Ω L-PAD ATTENUATOR IN THE H.F. SPEAKER CIRCUIT WHICH MAY BE ADJUSTED TO GIVE THE FOLLOWING ATTENUATION:-

APPROXIMATE ATTENUATION DB	R_1, R_2 CONNECTION
2 —	AS SHIPPED (BLACK STRAP CONNECTED ACROSS R_1)
5 —	REMOVE BLACK STRAP ACROSS R_1

LU-1026 NETWORK
SCHEMATIC
WIRING DIAGRAM
INTERNATIONAL PROJECTOR CORPORATION
WD-124

1. DESCRIPTION.

The LU-1047 is a two-way, series type dividing network on a chassis 7" high x 5-3/8" wide x 6-1/4" deep, weighing 5-1/4 lbs. A terminal strip is provided for external connections. The crossover frequency is 800 cycles, the input impedance 12 ohms and the high and low frequency output impedances each 12 ohms

2. INSTALLATION.

The LU-1047 should be installed in the LU-1017 Horn in the location shown on the system conduit layout drawing, and fastened by two wood screws. Connections should be made to the terminal strip per the system wiring diagram.

A. H.F. Speaker L-Pad Resistors, providing adjustable attenuation in the high frequency speaker circuit, may be adjusted as required per the schematic below to obtain optimum balance between H.F. and L.F. speaker.

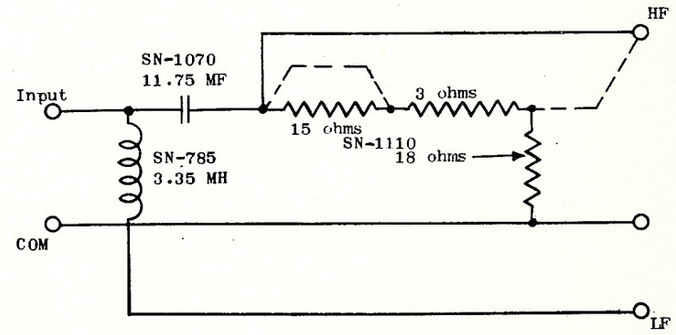

Attenuation DB	L-Pad Connections
1.5	Connections shown solid.
4.8	Connections shown dotted. (Strap out 15 ohm section and transfer HF output lead to 18 ohm section.)
8.0	Transfer HF output leads to 18 ohm section & parallel 15 ohm resistor with additional 15 ohm 10 watt resistor.

Printed in U.S.A.

Issue #2
September 15, 1941

1. DESCRIPTION.

The LU-1084 is a two-way parallel type dividing network on a chassis 8-1/2" high x 17" wide x 10" deep weighing approximately 24 lbs. Two terminal strips, each on an external cable form, are provided for external connections. The crossover frequency is 500 cycles with a nominal input impedance of 12 ohms and high and low frequency output impedances of 12 ohms. Two switches (for stage loudspeaker testing, frequency response measurements or emergency operation), a monitor volume control rheostat and jack for head set monitoring or frequency response measurements are mounted on the front panel. A vacuum tube socket, into which an AM-1003 Monitor Amplifier may be plugged, and a monitor amplifier "ON-OFF" switch are on the chassis. Heater and plate supplies for the monitor amplifier are obtained from the AM-1001 Amplifier. Adjustable L-Pad resistors are provided in the H. F. speaker circuit for use in tuning up.

2. INSTALLATION.

The LU-1084 should be installed in the AM-2023 Cabinet in the location shown on the system conduit layout drawing and per the Equipment Instruction "AM-2023 Cabinet", which is packed with the cabinet.

A. H. F. Speaker L-Pad resistors provide adjustable attenuation in the H. F. Speaker circuit and may be adjusted as required, per the associated drawing WD-1012, to obtain optimum balance between the H. F. and L. F. speakers.

B. Frequency Response Measurements. Plug the volume indicator into the jack on the front panel and set the H. F. and L. F. switches in the "OFF" position. The power amplifiers (AM-1001 or AM-1019) may then be terminated in either 6,12 or 24 ohms, in accordance with the associated drawing WD-1012, to obtain impedance matching. Check the amplifier output transformer connections to determine the matching impedance required. Refer to Equipment Instruction "AM-1001 Amplifier" for further details regarding its output transformer connections.

3. OPERATION.

A. Normal. Set the H. F. and L. F. switches in "ON" position. Set the monitor switch in "ON" position when the AM-1003 Monitor Amplifier is used. If the monitor amplifier is not used set this switch in "OFF" position.

B. Emergency. In case of failure of one of the high frequency stage speakers, set the H. F. switch in "OFF" position and the L. F. switch in "ON" position. The network is then disconnected and the L. F. speakers operate across the full output of the final amplifier(s).

C. Stage Speaker Testing. Stage speakers should be tested each day as follows and if the reproduction indicates a defective unit it should be replaced at once.

(1) H. F. Speakers. Set the H. F. switch in "ON" position and the L. F. switch in "OFF" position. This permits testing of all H. F. speakers as a group. To test each speaker separately lift each of the external connections to the H. F. terminals of the network.

(2) L. F. Speakers. Set the L. F. switch in "ON" position and the H.F. switch in "OFF" position. This permits testing of all L. F. speakers as a group. Where all L. F. speakers are connected in parallel, each speaker may be tested individually by lifting each of the external connections to the L. F. terminals of the network. When L. F. speakers are connected in series parallel, each group of two speakers in series may be tested by lifting the proper external connections to the L. F. terminals of the network.

4. ASSOCIATED DRAWING. WD-1012 LU-1084 Network, Schematic and Wiring Diagram

Issued by
Engineering Department
Printed in U. S. A.
Issue #1
June 3, 1946

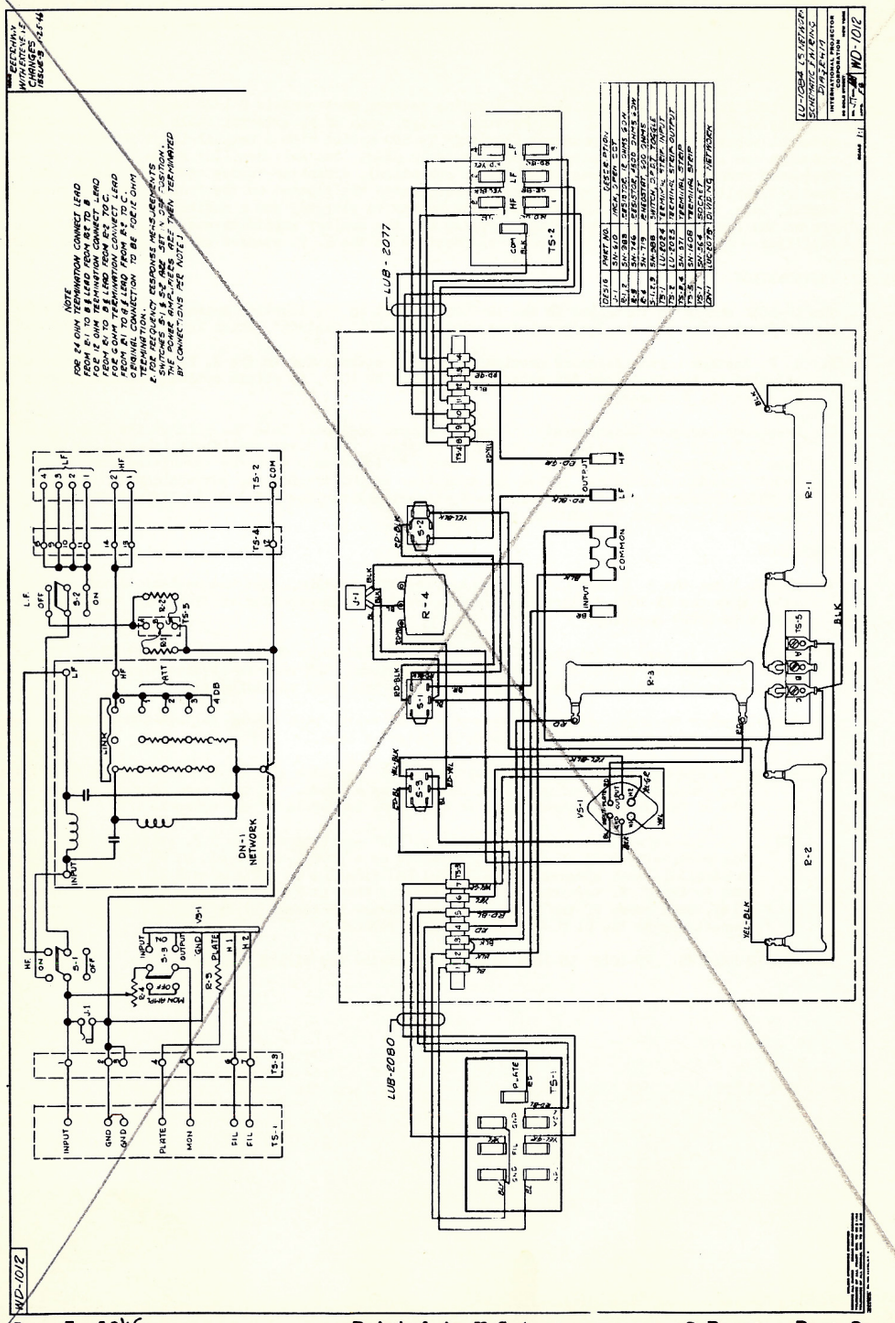
LU-1084 & 1085 NETWORK
SCHEMATIC & WIRING
DIAGRAM
WD-1012
LUB-2077
LUB-2080
DN-1
NETWORK
R-1
R-2
R-3
R-4
VS-1
TS-1
TS-2
TS-3
TS-4
TS-5
S-1
S-2
S-3
S-4
S-5
INPUT
GND
PLATE
MON
FIL
COMMON
OUTPUT
L.F.
HF
ATT
4 DB
OFF
ON
NOTE
FOR 24 OHM TERMINATION CONNECT LEAD FROM R1 TO B & LEAD FROM R2 TO C.
FOR 12 OHM TERMINATION CONNECT LEAD FROM R1 TO B & LEAD FROM R2 TO C.
FOR 8 OHM TERMINATION CONNECT LEAD FROM R1 TO B & LEAD FROM R2 TO C.
ORIGINAL CONNECTION TO BE FOR 12 OHM TERMINATION.
2. FOR FREQUENCY RESPONSE REQUIREMENTS SWITCHES S1 & S2 ARE SET IN OFF POSITION. SWITCHES S3 & S4 ARE SET IN ON POSITION. THE POWER AMPLIFIERS ARE NOT TERMINATED BY CONNECTING PER NOTE 1.

WD-1012

REDRAWN FROM ISSUE:5 WITH EXTENSIVE CHANGES

ISSUE: 6 6-11-48

DESIG	PART NO.	DESCRIPTION
J1	SN-610	JACK, OPEN CCT
R1, 2	SN-983	RESISTOR, 12 OHMS, 60 W
R3	SN-746	RESISTOR, 4500 OHMS, 60 W
R4	SN-719	RHEOSTAT, 600 OHMS
S1, 2, 3	SN-988	SWITCH, D.P.D.T. TOGGLE
TS 1	LU-2024	TERMINAL STRIP, INPUT
TS 2	LU-2025	TERMINAL STRIP, OUTPUT
TS 3, 4	SN-571	TERMINAL STRIP
TS 5	SN-1608	TERMINAL STRIP
VS 1	SN-564	SOCKET, 6 PRONG
DN 1	LUC-2075	DIVIDING NETWORK

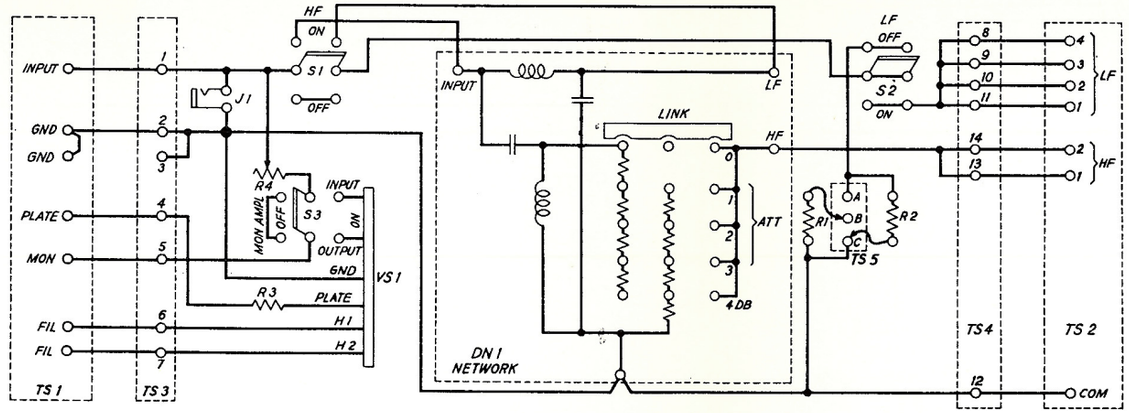

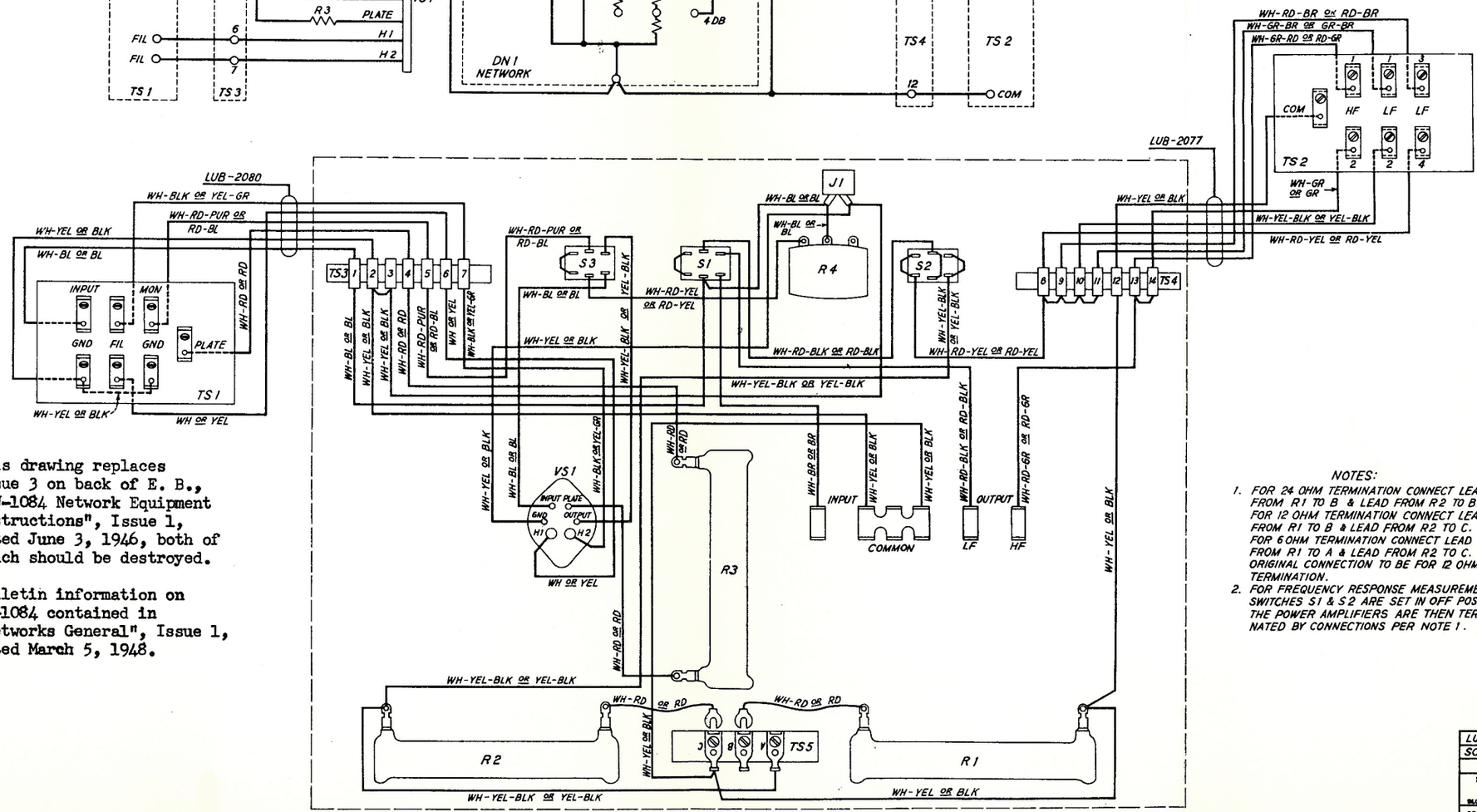

NOTE: This drawing replaces Issue 3 on back of E. B., "LU-1084 Network Equipment Instructions", Issue 1, dated June 3, 1946, both of which should be destroyed.

Bulletin information on LU-1084 contained in "Networks General", Issue 1, dated March 5, 1948.

NOTES:

1. FOR 24 OHM TERMINATION CONNECT LEAD FROM R1 TO B & LEAD FROM R2 TO B. FOR 12 OHM TERMINATION CONNECT LEAD FROM R1 TO B & LEAD FROM R2 TO C. FOR 6 OHM TERMINATION CONNECT LEAD FROM R1 TO A & LEAD FROM R2 TO C. ORIGINAL CONNECTION TO BE FOR 12 OHM TERMINATION.
2. FOR FREQUENCY RESPONSE MEASUREMENTS SWITCHES S1 & S2 ARE SET IN OFF POSITION. THE POWER AMPLIFIERS ARE THEN TERMINATED BY CONNECTIONS PER NOTE 1.

LU-1084 LS NETWORK
SCHEMATIC & WIRING
DIAGRAM

INTERNATIONAL PROJECTOR CORPORATION
55 LA FRANCE AVENUE
BLOOMFIELD NEW JERSEY

DR. CH'K. APP'D.

WD-1012

Code #	Description & Distribution Angle	Overall Dimensions Note 1			Requires		Approximate Net Weight With Unit(s) Note 2
		H	W	L	Throat	Speaker(s)	
1001	2 x 4 Multi-cellular 35° Vert. - 70° Horiz.	20"	31"	38"	Single	1 - LU-1060 PM	45 Lbs.
1029	2 x 4 Multi-cellular 35° Vert. - 70° Horiz.	20"	31"	37"	Double	2 - LU-1060 PM	60 Lbs.
1049	1 x 3 Multi-cellular 17.5° Vert. - 52.5° Horiz.	14"	20"	21"	Single	1 - LU-1060 PM	27 Lbs.
1012	3 x 4 Multi-cellular 52.5° Vert. - 70° Horiz.	22-1/2"	30"	31"	Double (Note 3)	2 - LU-1011 Energized Field	167 Lbs.
1013	3 x 5 Multi-cellular 52.5° Vert. - 87.5° Horiz.	23-1/2"	38-1/2"	31"	Double (Note 3)	2 - LU-1011 Energized Field	208 Lbs.
1014	3 x 6 Multi-cellular 52.5° Vert. - 105° Horiz.	23-1/2"	45"	31"	Double (Note 3)	2 - LU-1011 Energized Field	228 Lbs.
1019	2 x 5 Multi-cellular 35° Vert. - 87.5° Horiz.	16"	38-1/2"	31"	Double (Note 3)	2 - LU-1011 Energized Field	149 Lbs.

NOTES:
1. Overall length of horn includes speaker units. For length of horn less speaker unit deduct 8" for PM speaker and 5" for Energized Field speaker.
2. For weight of horn less speaker unit deduct 21 lbs. for each PM speaker and 26 lbs. for each Energized Field speaker.
3. These throats are detachable.

Printed in U.S.A.
Issue #1
October 15, 1941

1. DESCRIPTION.

The LU-1018 is a permanent magnet, cone type loudspeaker, 8" in diameter, 4" deep, weighing 11 lbs. The input transformer has two primary windings, which may be connected in series or in parallel to give an input impedance of 50 or 12½ ohms, and a secondary winding with an impedance of 6 ohms. The impedance of the voice coil is 6 ohms.

2. INSTALLATION.

The LU-1018 should be installed in the LU-1024 Horn in accordance with the Equipment Bulletin LU-1024 Monitor Loudspeaker.

A. Connections to Input Transformer. The primary windings should be connected in parallel when a monitor amplifier is <u>not</u> installed, and in series when a monitor amplifier <u>is</u> installed, in accordance with the following sketch:

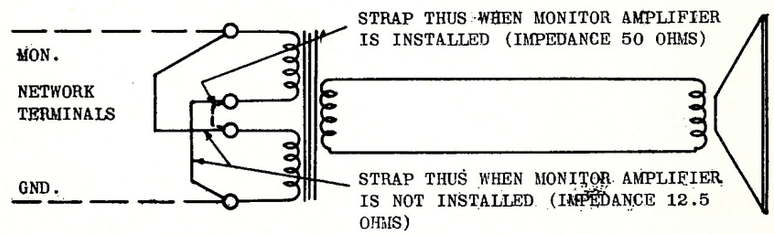

NOTE: - If a monitor amplifier is installed after the initial installation, the transformer connections should be carefully checked, and re-connections made per the above sketch.

3. OPERATION.

The Monitor volume control, located on the front panel of the network, should be adjusted for proper volume.

Printed in U. S. A.

1. DESCRIPTION.

The LU-1024 is a metal, folded, exponential type horn (8½" high x 20" wide x 12½" deep, weight 17 lbs.) equipped with a removable front cover, formed to three sides of a hexagon. The monitor speaker unit mounts behind the opening in the center section of the cover, and is protected by a metal grille. The other two sides of the cover are provided with louvres. Two vertical partitions in the horn are of aluminum to avoid weakening the magnetic field of the monitor unit. High frequency sound is radiated from the front of the speaker cone and low frequency sound from the rear through the louvres, thus giving full range high quality reproduction.

2. INSTALLATION.

The LU-1024 should be located in the Projection Room so that sound is audible at both projectors but is not projected through the ports into the balcony. It may be installed on the front or side wall (preferably left) by means of two holes in the rear, on the ceiling or on top of the system cabinet, using the mounting brackets provided. (See sketch on Page 2.)

NOTE:- Three holes are provided in the AM-2023 Cabinet for mounting the SN-713 Angles and SN-875 Leg. Similarly three holes are provided in the LU-1024 Monitor Loudspeaker for mounting the SN-714 Bracket and SN-875 Leg. It is not necessary to drill holes in the AM-2023 or LU-1024.

Five mounting holes are provided in the SN-714 Bracket for convenience in mounting on the ceiling or on the LU-1024. Two of the holes line up with holes in the LU-1024. Four holes are provided in the long side of the SN-875 Leg so that the LU-1024 may be tilted as required for sound distribution.

A. Installation of LU-1018 Monitor Unit. Take off the cover of the LU-1024, remove the nuts and washers from the four screws on the front of the cover, mount the monitor unit, replace washers and nuts, and tighten. Strap the terminals of the unit per Equipment Instruction "LU-1018 Monitor Unit", and make connections per the system wiring diagram.

B. Installation of Cover of LU-1024. In replacing the cover after the monitor unit has been mounted on it, all eight mounting screws should be threaded into the holes before any are tightened. The four mounting screws on the front of the cover should then be tightened first to make sure that the cover seats properly.

3. MAINTENANCE.

The cover and partition mounting screws should be checked periodically, and any loose screws tightened. For quality reproduction it is essential that all screws be tight. If the threads in the partitions become stripped, replace the screws with the larger Parker Kalon screws shipped loose with the horn.

Printed in U. S. A.
June 15, 1941
Issue #1

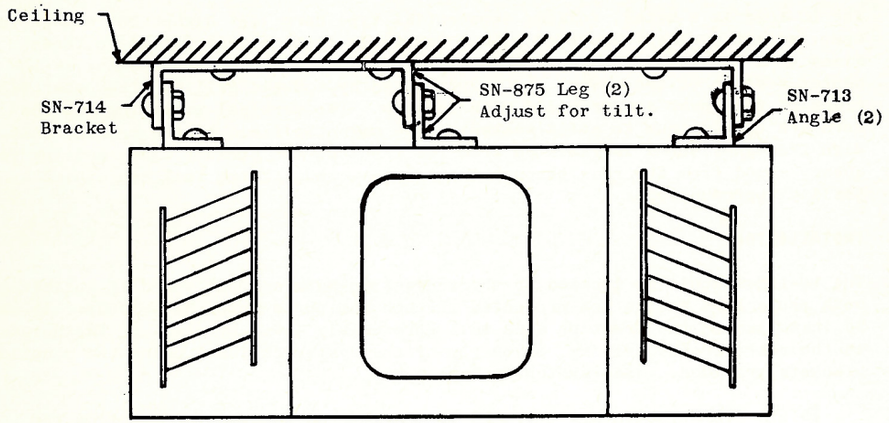

LU-1024 Monitor Loudspeaker Mounted on Ceiling.

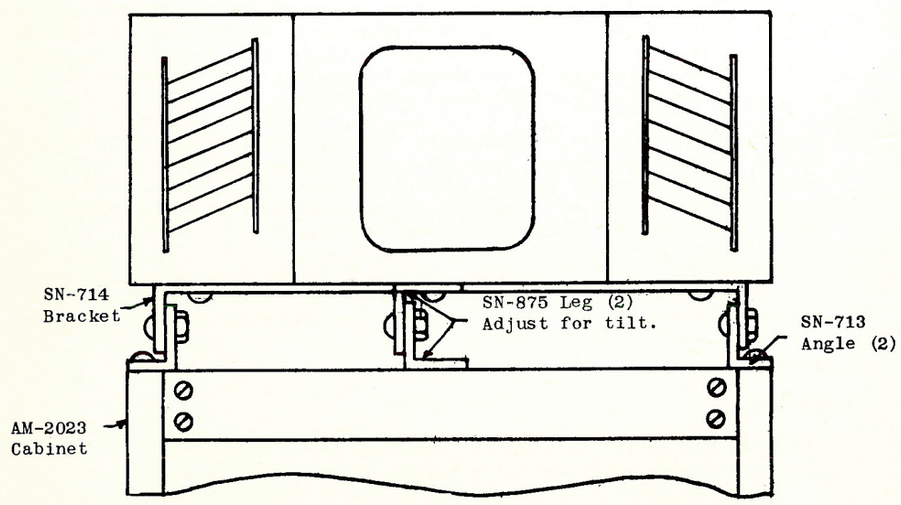

LU-1024 Monitor Loudspeaker Mounted on AM-2023 Cabinet.

WD-135

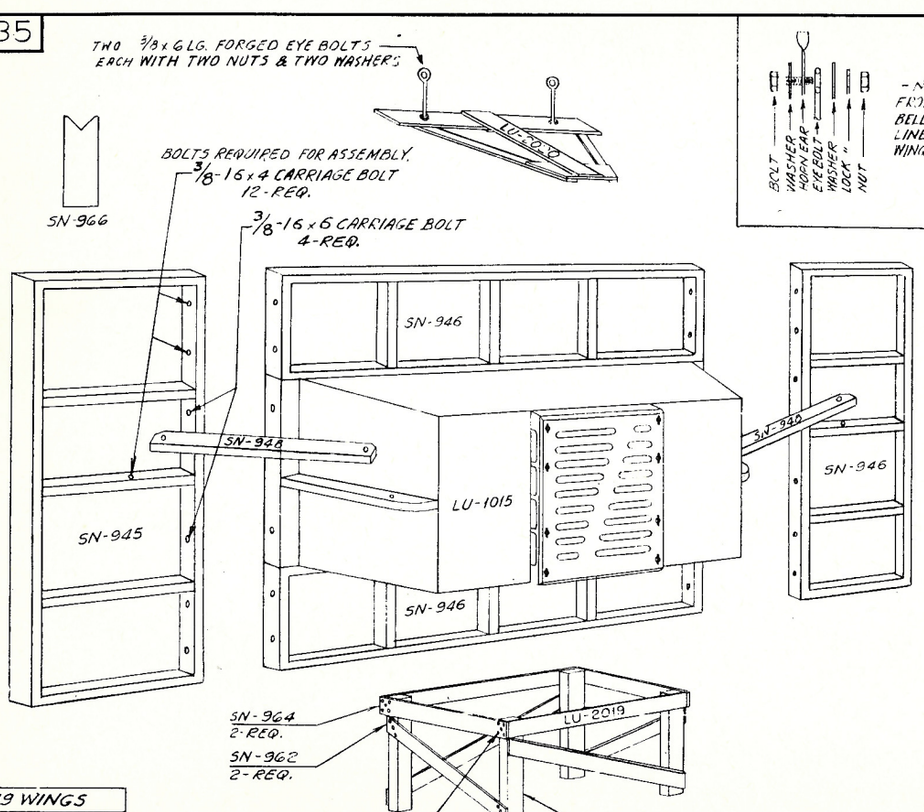

LU-2019 STAND IS ASSEMBLED AS SHOWN WITH #10 x 1½" LONG WOOD SCREWS.

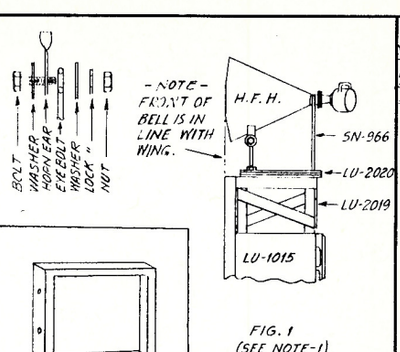

FIG. 1 (SEE NOTE-1)

ISSUE:-1 10-14-38
1/4-20 X 6 BOLT WAS 1/4-20 X 5.
ISSUE:2 1-13-41
3/8-16 WAS 1/4-20
#10 x 1½ WAS #14 x 1¾
ISSUE:3 2-4-41

NOTES:-

1. H.F. HORN IS MOUNTED ON TOP OF LU-2020 CRADLE (SEE FIG. 1) BY SECURING HORN EARS TO EYE BOLTS WITH TWO 5/16 x 1¼ LONG BOLTS.
2. AFTER THE FINAL PHASING RELATION IS ESTABLISHED, LU-2020 CRADLE SHALL BE FIRMLY SECURED TO LU-2019, WHICH IN TURN IS SECURED TO SN-946 WITH NAILS.
3. THE THROAT OF H.F. HORN IS SUPPORTED BY SN-966 WHICH IS TO BE CUT TO HEIGHT REQUIRED BY THE FINAL VERTICAL ANGLE OF THE HORN THEN FIRMLY TOE NAILED TO CRADLE.

LU-1039 WINGS			
DETAIL	REQ.	DETAIL	REQ.
SN-945	1	SN-962	4
" -946	3	" -963	4
" -948	2	" -964	4
" -966	1	LU-2020	1

ASSOCIATED ITEMS

LU-1039 WINGS
ASSEMBLE TO LU-1015 HORN
ASSEMBLY

INTERNATIONAL PROJECTOR CORPORATION
90 GOLD STREET NEW YORK

DR. JLS CHK. APP'D | WD-135

Printed in U.S.A.

WD-133

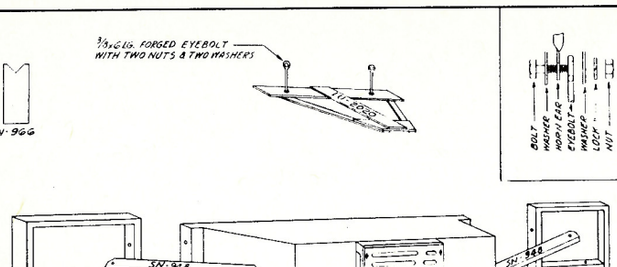

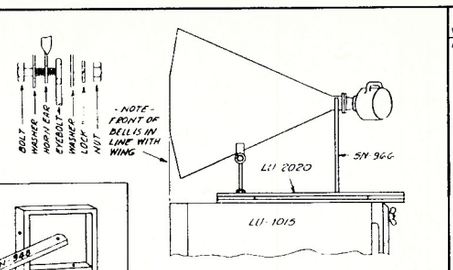

FIG. 1
(SEE NOTE 1)

ISSUE: 12-14-38
1/4-20 X 6 BOLT
W.AS 1/4-20 X 5.
ISSUE: 2 1-13-41

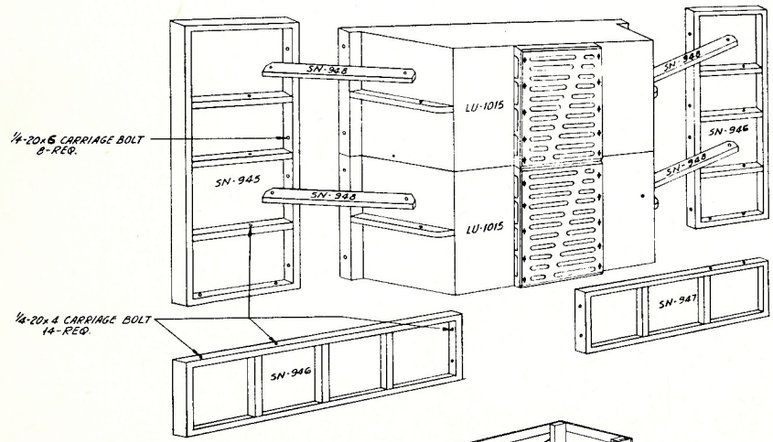

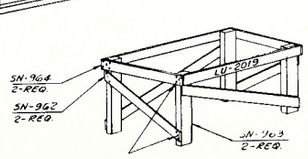

LU-2019 STAND IS ASSEMBLED AS SHOWN WITH #14 x 1 3/4 LONG WOOD SCREWS.

NOTE:

1. M.F. HORN IS MOUNTED ON TOP OF LU-2020 CRADLE (SEE FIG. 1) BY SECURING HORN EARS TO EYE BOLTS WITH TWO 5/16 x 1 1/4 LONG BOLTS.
2. AFTER THE FINAL PHASING RELATION IS ESTABLISHED, LU-2020 CRADLE SHALL BE FIRMLY SECURED TO LU-1015 WITH NAILS.
3. THE THROAT OF H.F. HORN IS SUPPORTED BY SN-966 WHICH IS TO BE CUT TO HEIGHT REQUIRED BY THE FINAL VERTICAL ANGLE OF THE HORN THEN FIRMLY TOE NAILED TO CRADLE.

LU-1040 WINGS	
DETAIL	REQ.
SN-945	1
" -946	2
" -947	1
" -948	4
" -966	1
" -962	2
" -963	2
" -964	2
LU-2020	1

ASSOCIATED ITEMS

LU-1040 WINGS
ASSEMBLE TO LU-1015 HORNS.
ASSEMBLY
INTERNATIONAL PROJECTOR CORPORATION
90 GOLD STREET NEW YORK
WD-133

Printed in U.S.A.

ALTEC SERVICE CORP.
Simplex
LU-1040 Wings
40.22

WD-130

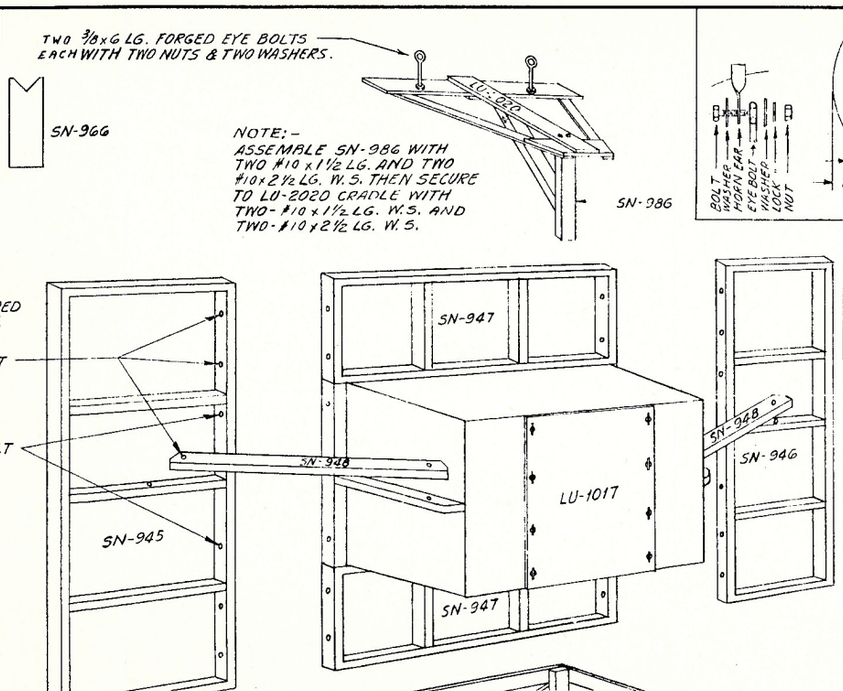

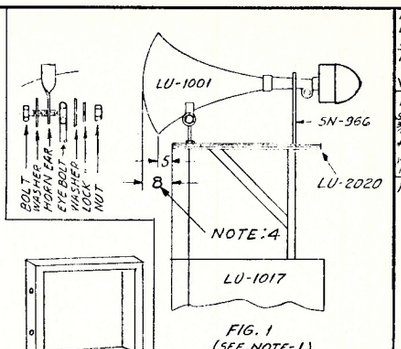

FIG. 1
(SEE NOTE-1)

REDRAWN FROM ISSUE-1 DUE TO CHANGES IN LU-2019 & LU-2020

ISSUE:2 10-14-38
1/4-20×6 BOLT WAS 1/4-20×5.

ISSUE:3 1-13-41
SN-957 & SN-965 REMOVED
3/8-16 WAS 1/4-20
#10-1½ WAS #14-1¾" ALL WOOD SCREWS #10 WERE #14
NOTE:4 ADDED

ISSUE:4 2-4-41

NOTES:-

1. H.F. HORN IS MOUNTED ON TOP OF LU-2020 CRADLE (SEE FIG.1) BY SECURING HORN EARS TO EYE BOLTS WITH TWO 5/16×1¼ LONG BOLTS.
2. AFTER THE FINAL PHASING RELATION IS ESTABLISHED, LU-2020 CRADLE SHALL BE FIRMLY SECURED TO SN-947 WITH NAILS.
3. THE THROAT OF H.F. HORN IS SUPPORTED BY SN-966 WHICH IS TO BE CUT TO HEIGHT REQUIRED BY THE FINAL VERTICAL ANGLE OF THE HORN THEN FIRMLY TOE NAILED TO CRADLE.
4. DIMENSIONS SHOWN APPLY TO LU-1060 HF UNIT. FOR LU-1000 HF UNIT, DIMENSIONS ARE 2" LESS:-NAMELY, 6"&3".

LU-1041 WINGS

DETAIL	REQ.
SN-945	1
" -946	1
" -947	2
" -948	2
" -966	1
" -962	2
" -963	2
" -964	2
" -986	1
LU-2020	1
	1

ASSOCIATED ITEMS

LU-1041 WINGS
ASSEMBLE TO LU-1017 HORN
ASSEMBLY

INTERNATIONAL PROJECTOR CORPORATION
90 GOLD STREET NEW YORK

DR. JLS CHK.
APP'D

WD-130

Printed in U.S.A.

ALTEC SERVICE CORP.
SIMPLEX

LJ-1041 Wings
40.22

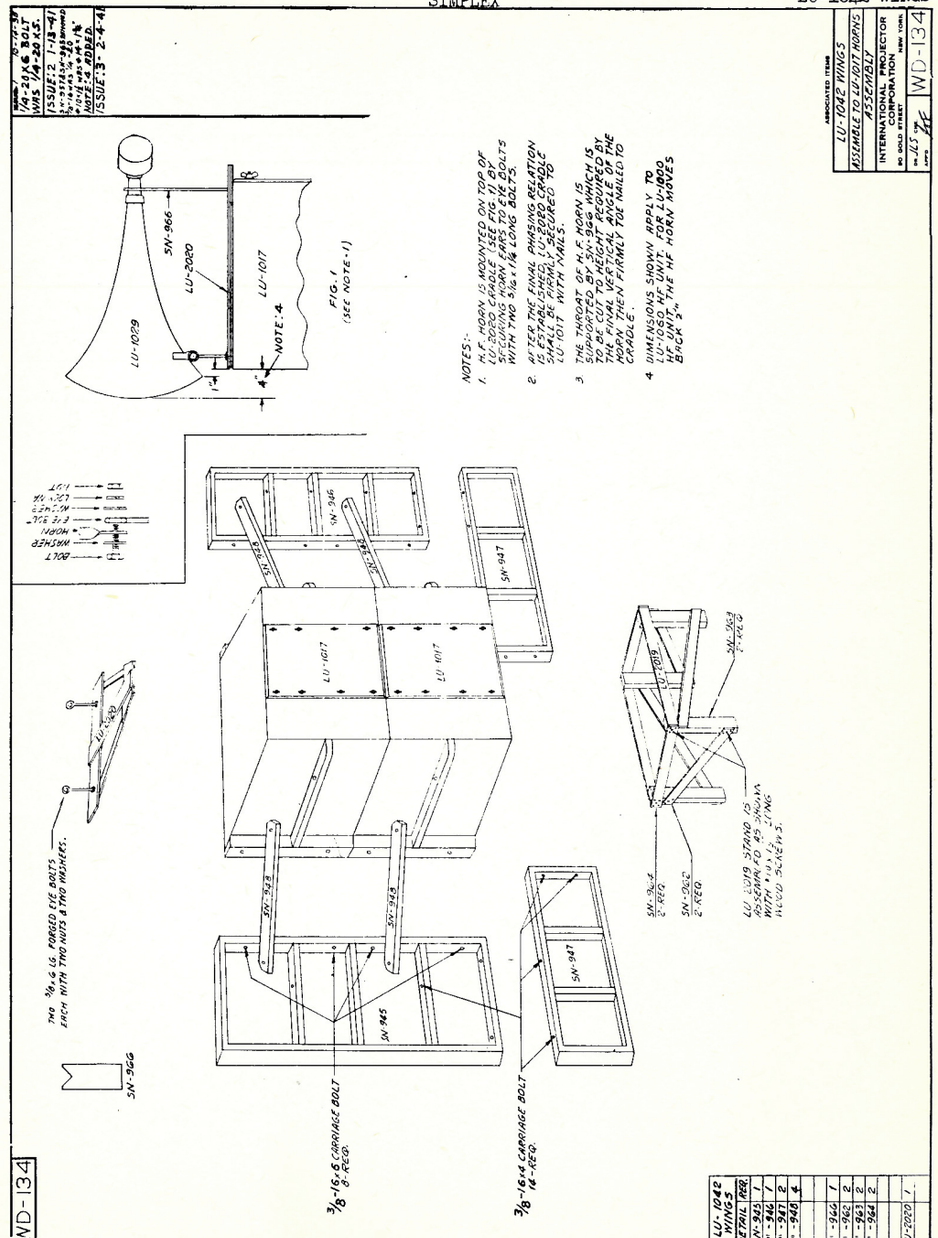
ISSUE: 1 10-17-39
1/4-20 X 6 BOLT
WAS 1/4-20 X 5
ISSUE: 2 1-13-41
SN-946 WAS WRONG
SN-945 WAS 14"
NOTE 4 ADDED.
ISSUE: 3 2-4-41
ASSOCIATED ITEMS
LU-1042 WINGS
ASSEMBLE TO LU-1017 HORNS
ASSEMBLY
INTERNATIONAL PROJECTOR CORPORATION
60 GOLD STREET NEW YORK
SCALE 1/16 SIZE A
DRAWN AF
WD-134
SN-966
LU-2020
LU-1017
LU-1009
NOTE:4
FIG. 1 (SEE NOTE-1)
NOTES:
1. H.F. HORN IS MOUNTED ON TOP OF LU-2020 CRADLE (SEE FIG 1) BY SECURING HORN EARS TO EYE BOLTS WITH TWO 5/16-18 LONG BOLTS.
2. AFTER THE FINAL PHASING RELATION OF THE H.F. HORN TO THE CRADLE HAS BEEN ESTABLISHED, CRADLE IS SECURED TO LU-1017 WITH NAILS.
3. THE THROAT OF H.F. HORN IS SUPPORTED BY SN-966 WHICH IS TO BE CUT TO HEIGHT REQUIRED BY THE HORN USED. ADJUST SN-966 TO HOLD HORN THEN FIRMLY TOE NAILED TO CRADLE.
4. DIMENSIONS SHOWN APPLY TO LU-1060 HF UNIT. FOR LU-1000 HF UNIT, THE HF HORN MOVES BACK 2".
BOLT
WASHER
HORN
EYE BOLT
NUT
LU-1017
SN-946
SN-947
SN-945
SN-943
SN-944
SN-963
LU-1009
LU-2020
SN-966
TWO 5/16-18 FORGED EYE BOLTS EACH WITH TWO NUTS & TWO WASHERS.
3/8-16 X 8 CARRIAGE BOLT 8 REQ.
3/8-16 X 4 CARRIAGE BOLT 14 REQ.
SN-944 2 REQ
SN-945 2 REQ
SN-963 2 REQ
LU-1009 STAND IS ASSEMBLED AS SHOWN WITH 10 1/2" SPIKE WOOD SCREWS.
LU-1042 WINGS
DETAIL REQ.
SN-945 1
" -946 1
" -947 2
" -946 4
" -946 1
" -963 2
" -943 2
" -944 2
LU-2020 1
WD-134

WC-1095

ISSUE 1 11-14-49
ADDED SHIELD TO INPUT WIRE FROM INPUT J = MONITOR AMPLIFIER CONNECTING STRIP TO R4
ISSUE -2 1-3-50
CORRECTED L-1 TO CONFORM TO PC-2226
A.D.
ISSUE 8 3-17-50

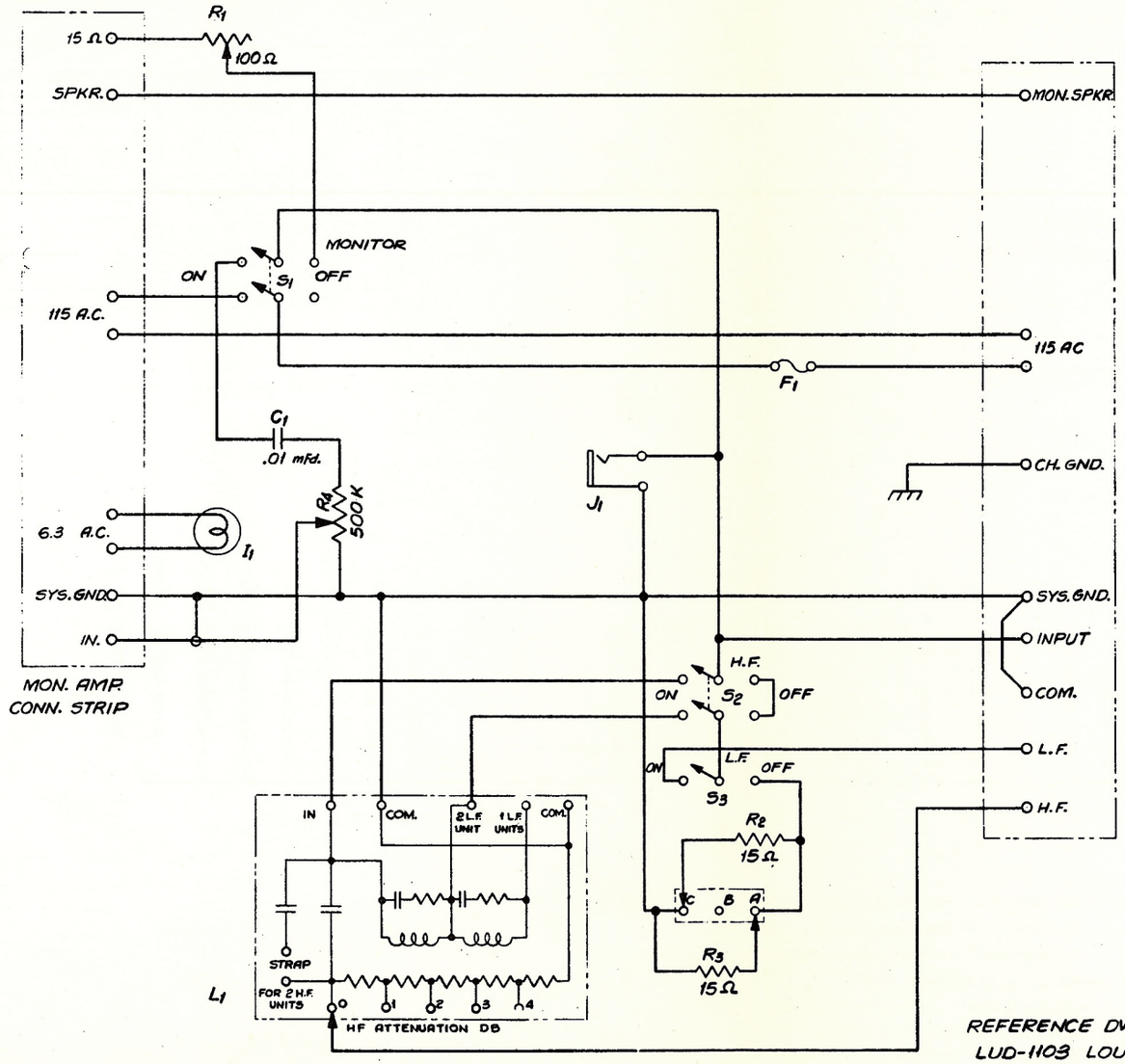

SYMBOL	I.P.C. PT. Nº	DESCRIPTION
R_1	PA-2646	RESISTOR, 100Ω, 10W., WIREWOUND.
R_2	2222	" , 15Ω, 50W., "
R_3	2222	" , 15Ω, 50W., "
R_4	2229	" , 500K, 2 W., POTENTIOMETER
C_1	2058	CAPACITOR, .01 mfd., 600V., TUBULAR, PAP.
F_1	2592	FUSETRON, 1 AMP.
I_1	2425	DIAL LAMP 6-8 V.
L_1	PC-2226	DIVIDING NETWORK
J_1	PA-2227	JACK-TWO CONDUCTOR
S_1	2427	TOGGLE SWITCH D.P.D.T.
S_2	2427	" " D.P.D.T.
S_3	2427	" " D.P.D.T.

REFERENCE DWGS.
LUD-1103 LOUDSPEAKER NETWORK
WD-1096 WIRING DIAGRAM

SCALE

SCHEMATIC
SPEAKER NETWORK

INTERNATIONAL PROJECTOR CORPORATION
55 LA FRANCE AVENUE
BLOOMFIELD NEW JERSEY
DR. A.D. CH'K. APP'D.

PRODUCT CLASS

F

WC-1095

UNLESS OTHERWISE SPECIFIED
REMOVE ALL BURRS BREAK SHARP CORNERS
TOLERANCES OF ALL FRACT. DIM. TO BE ± 1/64
TOLERANCES OF ALL DECIMAL DIM. TO BE ± .005

Issued by
Engineering Department
Printed in U.S.A.

40.22
LU-1103 NETWORK

ALTEC SERVICE CORPORATION
SIMPLEX

WD-1096

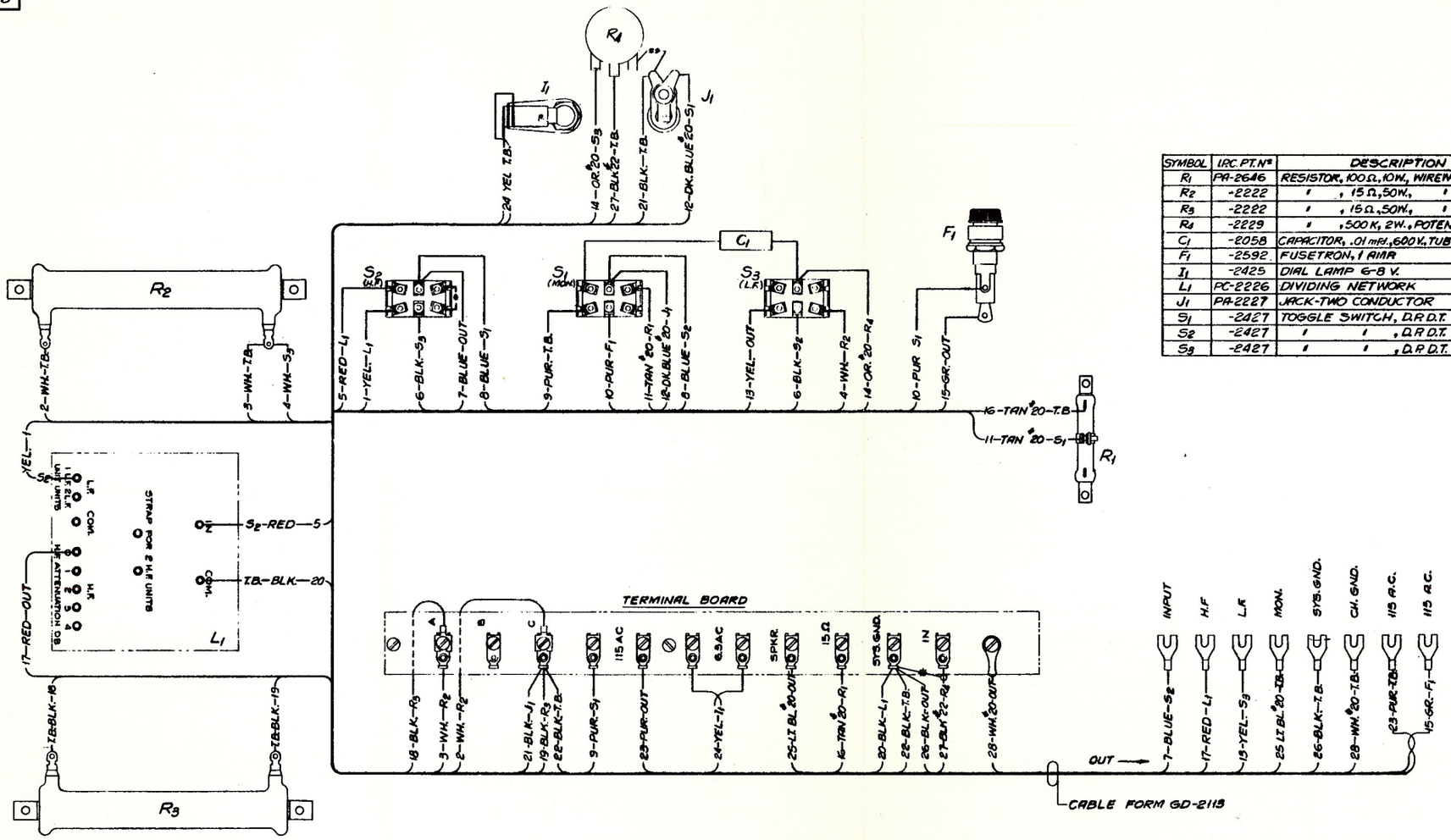

SYMBOL	I.R.C. PT. Nº	DESCRIPTION
R_1	PA-2646	RESISTOR, 100 Ω, 10W., WIREWOUND
R_2	-2222	" , 15 Ω, 50W., "
R_3	-2222	" , 15 Ω, 50W., "
R_4	-2229	" , 500 K, 2W., POTENTIOMETER
C_1	-2058	CAPACITOR, .01 mfd., 600 V., TUBULAR, PAPER.
F_1	-2592	FUSETRON, 1 AMP
I_1	-2425	DIAL LAMP 6-8 V.
L_1	PC-2226	DIVIDING NETWORK
J_1	PA-2227	JACK-TWO CONDUCTOR
S_1	-2427	TOGGLE SWITCH, D.P.D.T.
S_2	-2427	" " , D.P.D.T.
S_3	-2427	" " , D.P.D.T.

ISSUE 1 11-14-49
#27 WIRE BLK #22 WIRE GR #20 (2 PLACES) ADDED SHIELD FROM #27 WIRE TO SYS. GND. ON TERMINAL BOARD #18-BLK-R3 WAS CONNECTED TO SYS. GND.
ISSUE 2 1-6-50

ALL WIRES ARE Nº 18 A.W.G., UNLESS OTHERWISE SPECIFIED.
ALL WIRES ARE TABULATED ON CABLE FORM DWG.
DESIGNATIONS TO COMPONENTS MARKED 'T.B.' INDICATE WIRES GOING TO TERMINAL BOARD.
** EW-692 WIRE COVERED WITH EW-949 SLEEVING
COVER CAPACITOR LEADS WITH EW-949.
* EW-692 SOLID TINNED COPPER WIRE

REFERENCE DWGS.— LUD-1103 LOUDSPEAKER NETWORK
WC-1095 SCHEMATIC

SCALE
DRAWN 6-27-49
WIRING DIAGRAM
SPEAKER NETWORK

INTERNATIONAL PROJECTOR CORPORATION
55 LA FRANCE AVENUE
BLOOMFIELD NEW JERSEY
DR. A.D. CH'K. APP'D

PRODUCT CLASS

WD-1096

UNLESS OTHERWISE SPECIFIED
REMOVE ALL BURRS BREAK SHARP CORNERS
TOLERANCES OF ALL FRACT. DIM. TO BE ± 1/64
TOLERANCES OF ALL DECIMAL DIM. TO BE ± .005

Issued by
Engineering Department
Printed in U.S.A.

1. DESCRIPTION - The individual speaker furnished consists of a 6" permanent magnet (Alnico 5) cone type unit in an aluminum housing, containing a volume control and provided with rubber covered handles and a Tirex Cable.

1.1 Two of these units are permanently connected to screw type terminals inside a junction box on the upper end of a pipe stanchion that is located between every two cars. An open ended housing, for weather protection, is fastened above the junction box. When the speakers are not in use, they hang on hooks in the housing. The car occupant transfers the speaker from the housing to the inside of his car and adjusts the volume as required. The pipe stanchion is positioned so that the car occupant may transfer the speaker from the housing to his car at the beginning of the show and back to the housing at the end of the show without leaving his car.

1.2 Speaker V.C. - Impedance 3.2 ohms. Matching Transformer (1 for 2 speakers). - Primary Impedance 1125 ohms. - Secondary impedance 1.6 ohms.

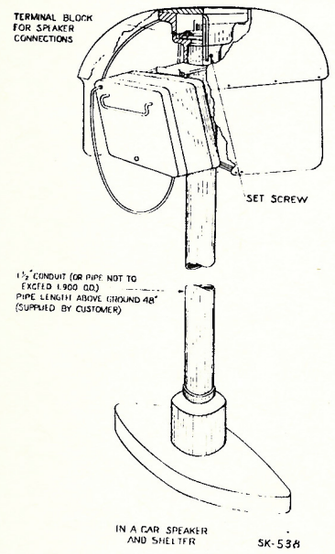

IN A CAR SPEAKER AND SHELTER SK-538

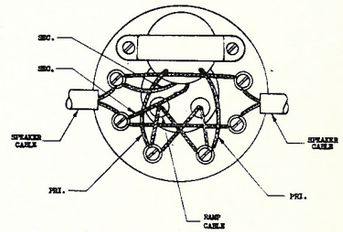

TERMINAL BLOCK CONNECTIONS IN-A-CAR SPEAKER SK-557

Issued by
Engineering Department
Printed in U. S. A.

Issue #1
December 15, 1946

0. ABSTRACT

0.1 To provide data regarding volume controls in Simplex In Car Speakers.

1. GENERAL

1.1 The following list gives code numbers and a partial description of Volume Controls used on Simplex In Car Speakers:

CODE NUMBER	
PA-2944	Used on 1950 Type A (4") speakers. Die cast metal knob. 35 ohms. May be used to replace "L" pad type on early speakers.
PA-2852	Used on all 1950 Type B (3-1/2") speakers. Medium straight knurl shaft. No knob. 35 ohms.
PA-3018	To be used on 1951 Type A (4") speakers. Plastic control knob. 35 ohms. Not interchangeable with either PA-2944 or PA-2852, or FPA-1309.
FPA-1309 ..... (Clarostat #43)	Used on all 4" speakers made up to and including 1949. "L" pad.

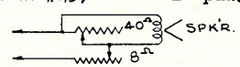

"L" PAD

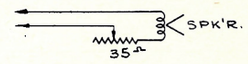

35 OHM SERIES TYPE

2. REPLACEMENTS

2.1 International Projector Corporation advises that they are preparing to furnish a substitute Volume Control for use as follows, on Drive-In Speakers:

VOLUME CONTROL CODE NUMBER	
PA-3078	Replacing PA-2944 Volume Control now used in LU-3021 and LU-3022 Speakers
PA-3078	Replacing PA-1309 Volume Control now used in LU-3002, LU-3004, 3006, 3007, 3008, 3009, 3012 and 3013 Speakers.

2.2 There are no wiring changes involved in the replacement of PA-2944 Volume Control.

2.3 The wiring changes involved in the replacement of the PA-1309 Volume Control are shown in the accompanying sketches.

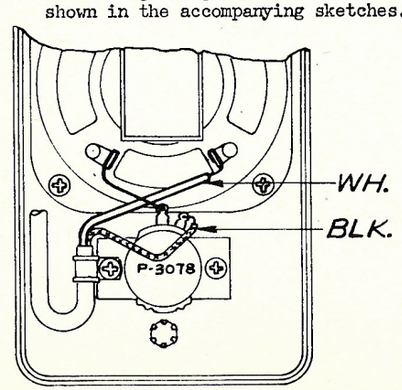

Fig. 1 2 WIRE SPEAKERS

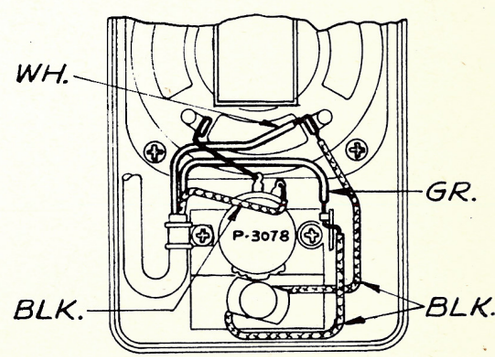

Fig. 2 3 WIRE SPEAKERS

Issued by
Engineering Department
Printed in U. S. A.

April 17, 1951
Issue #1

X-L SPEAKER EQUIPMENT

LIST OF PARTS

		X-L SOUND SYSTEMS				
		X-L2-11	X-L2-12 X-L4-12 X-L6-12	X-L4-22 X-L6-22	X-L 6-24 X-L12-24	X-L12-46
ALTEC NUMBER	I.P.C. NO. AND DESCRIPTION	SPEAKER EQUIPMENT LU-143	LU-144	LU-145	LU-146	LU-147
289	LU-1104 H.F. Unit	1	1	2	2	4
515	LU-1081 L.F. Unit	1	2	2	4	6
30337	LU-1106 L.F. Horn (Single)	1	-	-	-	-
30338	LU-1107 L.F. Horn (Double)	-	1	1	2	3
30339	LU-1108 L.F. Horn Stand	1	1	1	-	-
30280	LU-1109 H.F. Horn Sled	1	1	1	1	1
H-804	LU-1110 H.F. Horn (2 x 4)	-	-	1 or 1 or 1	-	-
H-1505	LU-1087 H.F. Horn (3 x 5)	-	-		1 or 1	-
H-1005	LU-1086 H.F. Horn (2 x 5)	1 or 1	1 or 1			-
H-805	LU-1085 H.F. Horn (2 x 4)			-	-	-
H-1504	LU-1091 H.F. Horn (3 x 5)	-	-	-	-	1 or 1
H-1804	LU-1092 H.F. Horn (3 x 6)	-	-	-	-	
30162	LU-2062 Horn Throat (Single)	1 or 1	1 or 1	-	-	-
30210	LU-2063 Horn Throat (Single)			-	-	-
30170	LU-2065 Horn Throat (Double)	-	-	1 or 1	1 or 1	2
30172	LU-2066 Horn Throat (Double)	-	-			-

NOTE: See 40.385 - Systems.

1. DESCRIPTION

1.1 An Auxiliary Loudspeaker for Cry Room or similar use with volume control may be added to any Simplex XL Sound System.

The following equipment is required:

1 LU-142 Monitor Loudspeaker
1 AM-1053 Volume Control, consisting of -

1 P-3131 Dial Plate Monitor
1 P-3132 Dial Plate Auxiliary Loudspeaker
2 P-2183 Knobs
2 P-1859 Nuts
2 P-3130 Volume Controls (15 ohm)

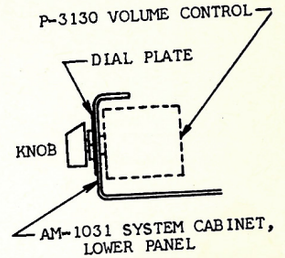

FIGURE 1

2. INSTALLATION

2.1 Auxiliary Loudspeaker

The LU-142 Monitor Loudspeaker should be installed in the desired location, in such a manner that sound is audible throughout the area.

2.2 Volume Controls

The two P-3130 Volume Controls should be installed in the bottom of the AM-1031 Cabinet in place of the left and right apparatus blanks per Figure 1 and connections made per Figure 2.

3. OPERATION

3.1 The P-3130 Volume Controls regulate the volume of the Projection Room Monitor, and the Auxiliary Loudspeaker respectively. The Network Panel Volume Control is in the input of the Monitor Amplifier, adjusts the volume of the above speakers simultaneously, and should be set permanently so that the monitor and auxiliary speaker volumes are adequate with their respective volume controls in approximately 2/3 maximum volume position. Volume adjustment should be made thereafter by means of the P-3130 Volume Controls.

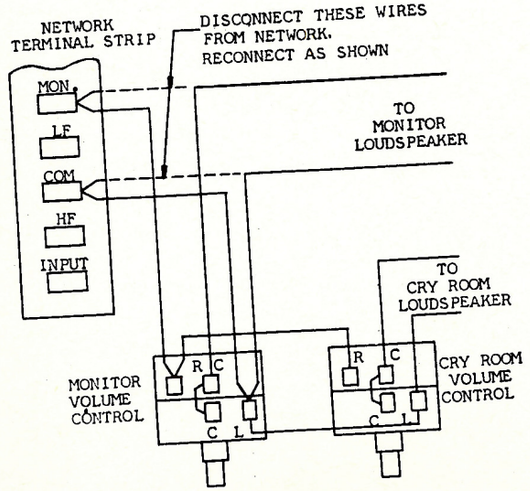

FIGURE 2-A WIRING DIAGRAM

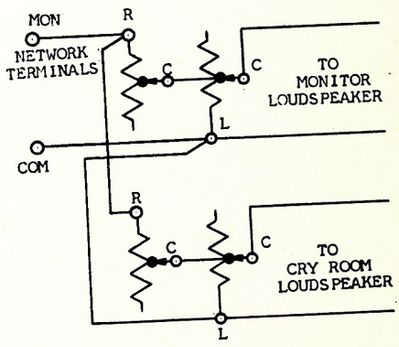

FIGURE 2-B SCHEMATIC

ISSUE	APP'D
1 1-4-50	

NOTES ~
1 ~ ALL WIRES ARE #16 AWG, 26 STRANDED, TINNED COPPER, .019 VINYLITE COVERED, .097 ± .002 OUTSIDE DIA. COLOR CODE AS SHOWN (PLASTOID CORP OR EQUIV.). 80° C.
2 ~ ALL JOINTS SHALL BE FREE FROM EXCESS SOLDER OR ROSIN.
3 ~ WIRES SHALL BE CABLED WHERE POSSIBLE USING #6 LACING TWINE TO OBTAIN NEAT & WORKMANLIKE APPEARANCE.

WHITE
BROWN
YELLOW
GRAY
ORANGE
RED
GR. BLACK
GR. RED
GR. WHITE
GR. BLUE
GR. BROWN
WH. BLACK
BLACK
1 2 3 4 5 6 7 8 9 10 11 12
CH. GND.
OUT 1
OUT 2
3
4
MON
BL'K.
TS2
FRONT VIEW
WH. RED
WH. BLUE
YEL. BLACK
GREEN
YEL. RED
YEL. BLUE
CABLE 12" LG.
SWITCHES ARE SHOWN IN OFF POSITION
T1
8A
50A
TS1
S4 S5 S6 S10 S11 S12
R4 R5 R6 R10 R11 R12
P1
R13
WH. RD.
GR. WH.
GR. RD.
GR. BL'K.
YEL. BL.
YEL. RD.
YEL.
BRN.
WH.
WH. BL.
WH. BLK.
GR. BL.
GR. BL.
YEL. GR.
YEL. BL'K.
RD.
OR.
GRAY
OFF
S13
1 2 3 4
S1 S2 S3 S7 S8 S9
R1 R2 R3 R7 R8 R9
BL'K.
TOP OF PANEL
REAR VIEW
TOP OF PANEL

APP'D	DRAWN BY
DATE 1-4-50	SORENSEN DATE 12-30-49

ALTEC SERVICE CORP. N.Y.

AS-2189

WIRING DIAGRAM
LU-3017 PANEL ASSEMBLY

Issued by
Engineering Department
Printed in U.S.A.

ALTEC SERVICE CORPORATION
SIMPLEX

LU-3017 Monitor Volume
Ramp Control Panel

ISSUE: 1 6-19-50

LU-3017 MONITOR VOLUME-
RAMP CONTROL PANEL
SCHEMATIC
INTERNATIONAL PROJECTOR CORPORATION
55 LA FRANCE AVENUE BLOOMFIELD NEW JERSEY
DR. CH'K. APP'D.
IB-2224

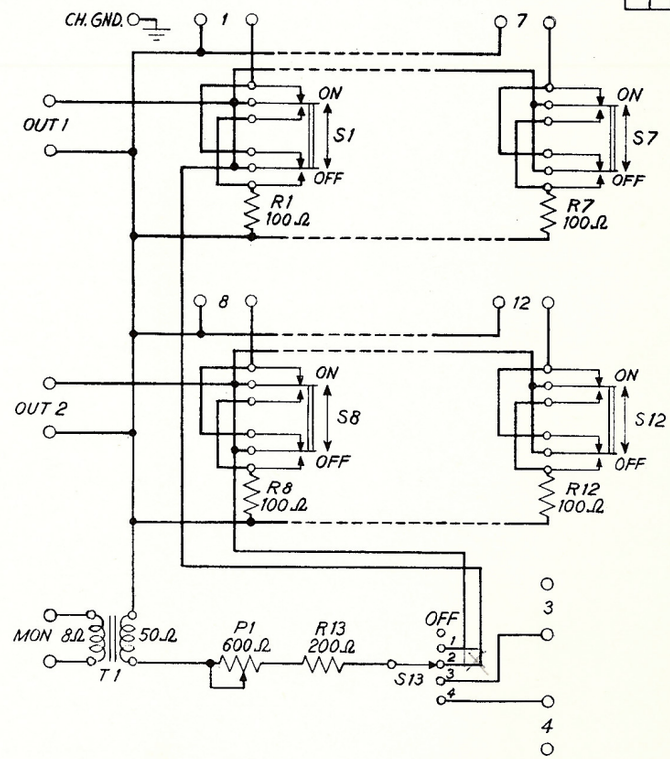

PARTS LIST		
SYM	ITEM	DESCRIPTION
P1		POTENTIOMETER MALLORY M-600-P
R1-12		RESISTOR OHMITE 0368 100Ω 25W
R13		RESISTOR OHMITE 1014 200Ω 10W
S1-12		SWITCH MOSSMAN 044T2 TURN
S13		SWITCH MALLORY 1315L
T1		TRANSFORMER A.L.C. 50:8Ω MATCHING

Issued by Engineering Department
Printed in U.S.A.

ISSUE		APP'D
1	1-4-50	
WH.BN. WAS WH.BLK		
2	2-6-50	

APP'D [illegible] DATE 1-4-50

DRAWN BY SORENSEN DATE 1-4-50

ALTEC SERVICE CORPORATION NEW YORK

AS-2190

WIRING DIAGRAM

LU-3018 PANEL ASSEMBLY

NOTES —

1 ~ ALL WIRES ARE #16 AWG., 26 STRANDED, TINNED COPPER, .019 VINYLITE COVERED, .097 ± .002 OUTSIDE DIAM.. COLOR CODE AS SHOWN. (PLASTOID CORP. OR EQUIV.) 80°C.

2 ~ ALL JOINTS SHALL BE FREE FROM EXCESS SOLDER OR ROSIN.

3 ~ WIRES SHALL BE CABLED WHERE POSSIBLE USING #6 LACING TWINE TO OBTAIN NEAT & WORKMANLIKE APPEARANCE.

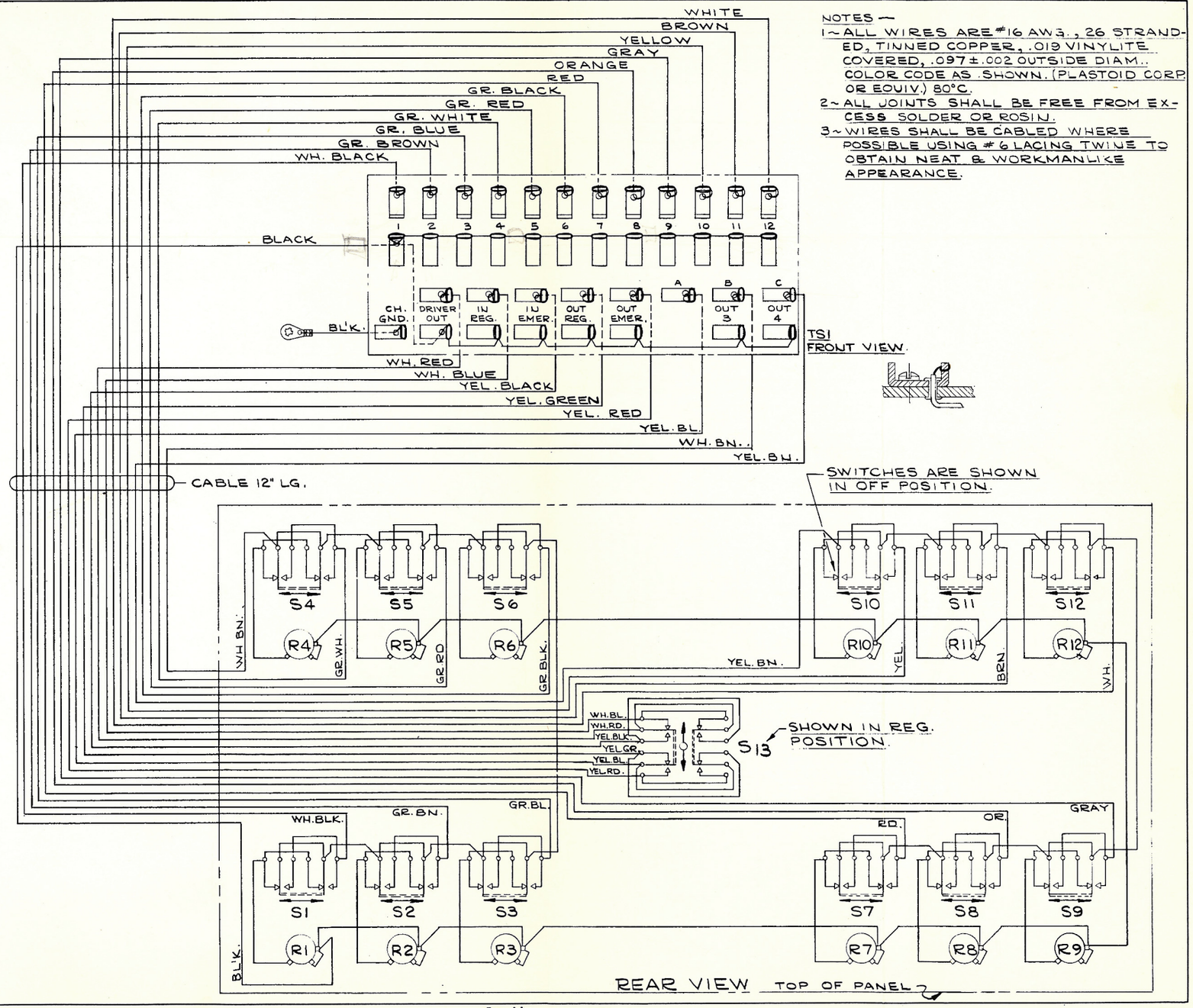

Issued by
Engineering Department
Printed in U.S.A.

ISSUE: 1 6-19-50

LU-3018 AMPLIFIER SELECTOR-
RAMP CONTROL PANEL
SCHEMATIC
INTERNATIONAL PROJECTOR CORPORATION
55 LA FRANCE AVENUE BLOOMFIELD NEW JERSEY
DR. CH'K. APP'D.
IB-2225

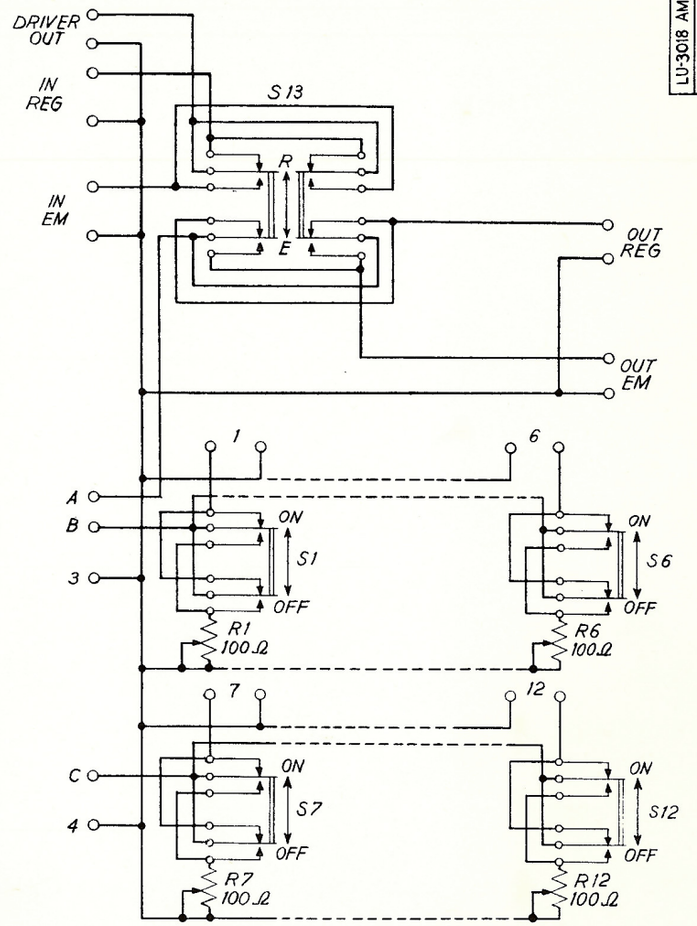

PARTS LIST

SYM	ITEM	DESCRIPTION
R1-12		RESISTOR OHMITE 0368 100Ω 25W
S1-12		SWITCH MOSSMAN 044 T2 TURN
S13		SWITCH G.C., MCM

Issued by Engineering Department
Printed in U.S.A.

1. DESCRIPTION.

Type	-	Chassis type. All AC. Full wave rectifier and AC emergency supply.
Tubes	-	2 SN 941 (G.E. 277465) Tungar Bulbs.
Ballast Lamp	-	1 SN 723 (Amperite 41-7 type).
Output	-	DC - 4 amp 9 volts (ripple voltage 1% max.) for exciter lamp supply. AC - 2 Volts for preheat & 9 volts for AC emergency exciter lamp supply.
Power Supply	-	100 - 130 V 50 - 60 cycles AC - 250 Watts.
Fusing	-	One SN-594 (1 amp) and one SN-605 (3.2) Fusetron.
Dimensions	-	9" High x 17" wide x 10" Deep.
Weight	-	65 lbs.
Accessories	-	Equipped with "Rec" - "AC" Switch for switching to emergency output.
Associated Dwg.	-	WD-123 Schematic & Wiring Diagram.

2. INSTALLATION.

The PU-1000 should be installed in the AM-2023 or AM-2033 Cabinet in the location shown on the system conduit layout drawing. External connections to the terminal strips should be made in accordance with the system wiring diagram.

CAUTION:- The three wires to the AM-101 Volume Control Amplifier must be twisted tightly. Do not operate the power unit without the exciter lamps installed, as the shunt resistor in the power unit may become damaged and make replacement necessary.

A. Power Transformer Connection. Transformers T_1 and T_2 have "125 V", "115 V" and "105 V" taps. Connections should be made to these taps as follows (See WD-123):-

Average Line Voltage	Connect to T_1 and T_2 Taps
120 - 130	125 V (Connection as shipped)
110 - 120	115 V
100 - 110	105 V

B. Adjustment of DC Exciter Lamp Current. It is important that the adjustments to obtain 4 ampere DC exciter lamp current be made carefully in accordance with the following procedure. The ballast lamp is designed for 4 amperes and, to maintain this current within the range of 7 to 13 volts drop across the lamp. So that the ballast lamp may compensate for both increase and decrease in line voltage, the normal drop should be adjusted near the middle of the lamp's operating range, approximately 10 volts. Reasonable care must be exercized in the selection of the "normal" ballast lamp voltage drop in order that extreme increases in line voltage will not cause the lamp to operate at or above its maximum voltage limit. Such a condition will shorten the lamp's life, and in some instances may destroy its regulating properties by open-circuiting parts of its multi-filament structure. It is therefore important that line voltage variations be carefully observed over a typical operating day, and the power unit adjustments made so that overload conditions will not be encountered.

Transformer T_2, which supplies the rectifier circuit, is provided with four secondary taps, each succeeding tap from 1 to 4 representing approximately 3 volts increase in secondary voltage. In order that the ballast lamp and rheostats will absorb a minimum of power, use the lowest secondary tap which will give satisfactory results.

The power units are shipped with the adjustable resistors in the minimum current position so that the exciter lamp will not be damaged when the power unit is turned on initially. Before making adjustments make sure of this condition and also that transformer primaries are connected for average line voltage.

To make the adjustments, invert the power unit and proceed as follows:-

(1) In the rear left corner remove the metal strap at "A" and connect a DC Ammeter (0 - 10 scale) to the two terminals for measuring the exciting lamp current.

(2) Connect a DC Voltmeter (0 - 15 scale) to the two terminals in the rear left corner designated "V" for measuring the potential drop across the ballast lamp..

(3) Set the "AC" switch in "ON" position, the "Output" switch in "REC" position, and allow the ballast lamp to heat up and stabilize.

(4) Adjust the "series" rheostat until the current is 4 amperes.

(5) Adjust the "shunt" rheostat so that the voltage across the ballast lamp is 10 volts.

(6) Readjust the "series" and "shunt" rheostats successively as required to obtain the above readings as the adjustment of one affects the other. Since the resistance of the ballast lamp is dependent on its temperature, a minimum of ten seconds should be allowed between adjustments to permit stabilization of the ballast lamp.

Issue #1
June 18, 1941
Printed in U. S. A.

NOTE:- If the voltage across the ballast lamp, with rheostats in extreme counter-clockwise position, is more than ten volts, transfer the "low" leads from tap "3" to tap "2" or "1" as required before making adjustments 4, 5 or 6. On the other hand, if the rheostats are near the extreme clockwise position before a balance is obtained, transfer the "low" leads from tap "3" to tap "4". The current must be adjusted to 4 amperes. The voltage across the ballast lamp may be min. 9.5, max. 10.5 volts if closer adjustment is not possible.

When the final adjustments have been made, both rheostats, R_2 and R_3, should be near their extreme clockwise position. In this position the voltage drop across R_2 is a minimum and, consequently, the regulation of the exciter lamp current can be accomplished more perfectly due to the fact that the lamp represents practically the entire load. If R_3 is set at its extreme clockwise position the current through it is a minimum and, therefore, the ballast lamp is required to handle a minimum load. Proper selection of the secondary voltage tap will facilitate arriving at these desirable rheostat settings.

C. Adjustment of AC Exciter Lamp Current. To adjust the AC exciter lamp supply set the "Output" switch in "AC" position, connect an AC Voltmeter (0 - 15 scale) across "COM" and "DC" terminals in the rear left corner, and adjust "AC" rheostat R_1 until the meter reads 9 volts. Also check the "preheat" voltage (2 volts AC) by connecting the voltmeter across terminals "AC" and "COM".

D. THE EXCITER LAMP BRACKET SHOULD NOT BE REMOVED FROM THE SOUNDHEAD WHILE THE LAMP IS BEING OPERATED ON DC, SINCE REMOVING THE LOAD FROM THE POWER UNIT WILL CAUSE A VOLTAGE SURGE, WITH THE POSSIBLE RESULT OF BURNING OUT THE PILOT LAMP OR FUSE IN THE VOLUME CONTROL AMPLIFIER. However, the exciter lamp operating on standby current may be removed without damage since the transformer which supplies both the standby and operating AC current is independent of the transformer used in connection with the DC supply.

3. OPERATION.

A. Normal. Set "AC" Switch in "ON" position, and set "Output" switch in "REC" position. The tungar bulbs should normally begin to glow as soon as the "AC" switch is set in "ON" position. If one of the tubes is burned out, or "hard", the other will not start. If the tube is not burned out but the difficulty is due to a "hard" tube, the "AC" switch should be operated several times, which will in most instances start the "hard" tube. Otherwise, replacement will be necessary.

B. Emergency. Set "AC" switch In "ON" position and "Output" switch in "AC" position. The "Output" switch in this position disconnects the rectifier transformer, and the tungar bulbs are dark.

4. MAINTENANCE.

A. Tungar Bulbs. Check periodically to make sure that the bulbs are tight in their sockets, and the springs make good contact. A burned out bulb should be replaced at once as the other bulb will not carry the load. Flickering of the pilot light in the AM-101 Volume Control Amplifier is an indication of a defective bulb.

B. Ballast Lamp. The prongs should make good contact, and the prongs and socket contacts should be clean and bright. Check periodically.

C. Condensers. Check all clamping rings and nuts periodically, and tighten if necessary.

D. Exciter Lamp Current Adjustment. The exciter lamp current should be checked periodically by the method described under 2-B above, since the characteristics of the tungar bulbs, ballast lamp and exciter lamp change with age. At no time should these adjustments be made without the aid of a voltmeter and an ammeter. If ammeter is not available, a DC voltmeter may be connected across exciter lamp terminals "1" and "2" in the "ON" sound mechanism. The meter should read 8.5 volts min., 9.0 volts max. If the voltage is lower, readjust by method described under 2-B above. If readjustment is impossible, replace ballast lamp and tungar bulbs successively, and repeat adjustments.

Printed in U. S. A.

When the PU-1000 Power Unit (DC exciter lamp supply for 4 amp,9 volt lamps) and the AM-2033 Cabinet are substituted for the PU-1005 Power Unit (AC exciter lamp supply for 7.5 amp,10 volt lamps) in single or dual projector Type "E" Systems installation, operation and maintenance of the system are the same except with reference to the exciter lamp supply circuit. The differences are noted below.

1. **INSTALLATION.** (Refer to conduit layout drawing WD-155)

A. Mount the AM-2033 Cabinet in a convenient location, preferably adjacent to the AM-142 Amplifier Equipment.

B. Connect AC conduit to the AM-2033. If convenient this conduit may terminate at item 9 (AC switch) on WD-155, and be wired so that the switch controls the AC supply to the AM-142 and PU-1000.

C. In dual projector systems mount a 4" outlet box on the front wall in place of item "E" on WD-155. In single projector systems mount a 6" x 6" x 3" box, supplied by the customer, in place of item "E" on WD-155, and install the SN-982 Resistor (60 watts 5 ohms) in it. Run a 1/2" conduit from this box to the AM-2033. Omit conduit 5 from item "E" to item 9.

D. Pull wires, install PU-1000 Power Unit per paragraph "E" below and connect the exciter lamp circuit per Figure 1 or Figure 2. Other system wiring is the same as shown on WD-157.

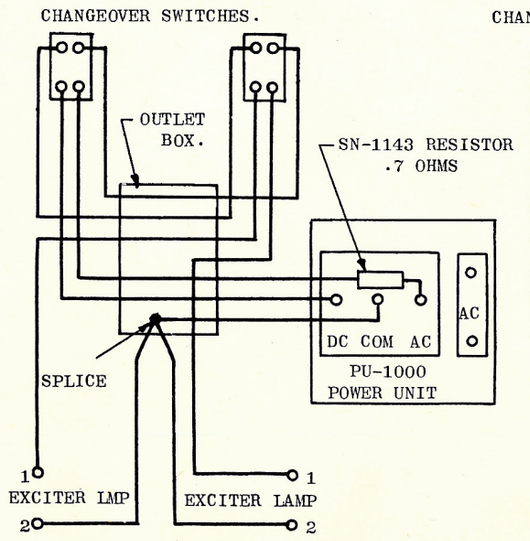

FIGURE 1. DUAL PROJECTORS

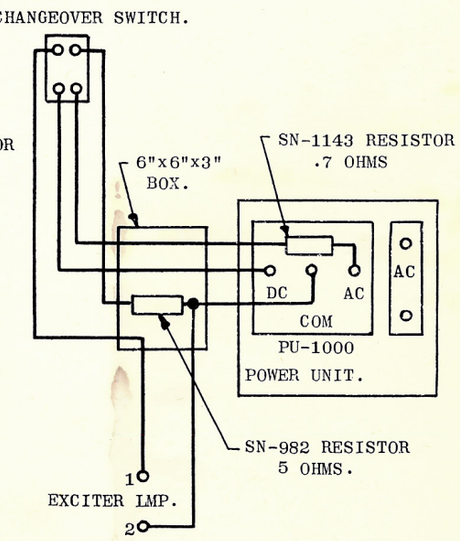

FIGURE 2. SINGLE PROJECTOR

Printed In U.S.A.

E. Install the PU-1000 Power Unit in the AM-2033 Cabinet per Equipment Instruction "AM-2033 Cabinet", connect the SN 1143 Resistor (10 watts 0.7 ohms) per Figure 3. This resistor reduces the "preheat" voltage on the "OFF" exciter lamp. Make external connections per Figure 1 or Figure 2.

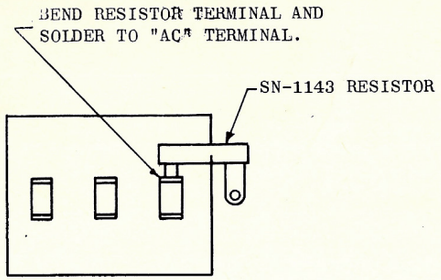

FIGURE 3.

F. Adjust the exciter lamp current per Equipment Instruction "PU-1000 Power Unit" and supplement "Adjustment of PU-1000 Power Unit".

G. Modification of AM-141 Volume Control Amplifier.

(Refer to drawing WD-158) In the AM-1010 Volume Control Amplifier strap out C_9 and L_1 per Figure 4.

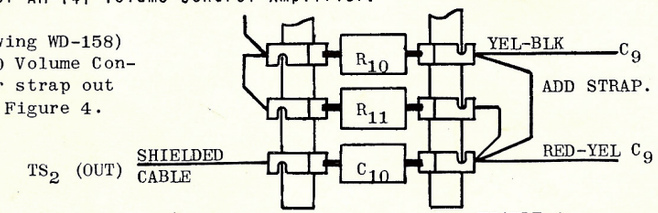

FIGURE 4.

2. OPERATION.

A. AC Power. Turn the AM-142 Amplifier Equipment and PU-1000 Power Unit "ON" and "OFF" by means of the main AC power supply switch and the "AC" switch on the PU-1000. If the PU-1000 is connected to the main AC switch, its "AC" switch may be left in "ON" position.

B. PU-1000 Power Unit. Set the "Output" switch in "REC" position. Tungar bulbs should begin to glow immediately, the exciter lamp in one sound mechanism should be bright (4 amps 9 volts) while the other exciter lamp should be dim (2 volts AC).

3. MAINTENANCE.

A. PU-1000 Power Unit. Maintain per Equipment Instruction "PU-1000 Power Unit".

Printed in U.S.A.

Simplex

PU-1000 POWER UNIT

ALTEC SERVICE CORPORATION

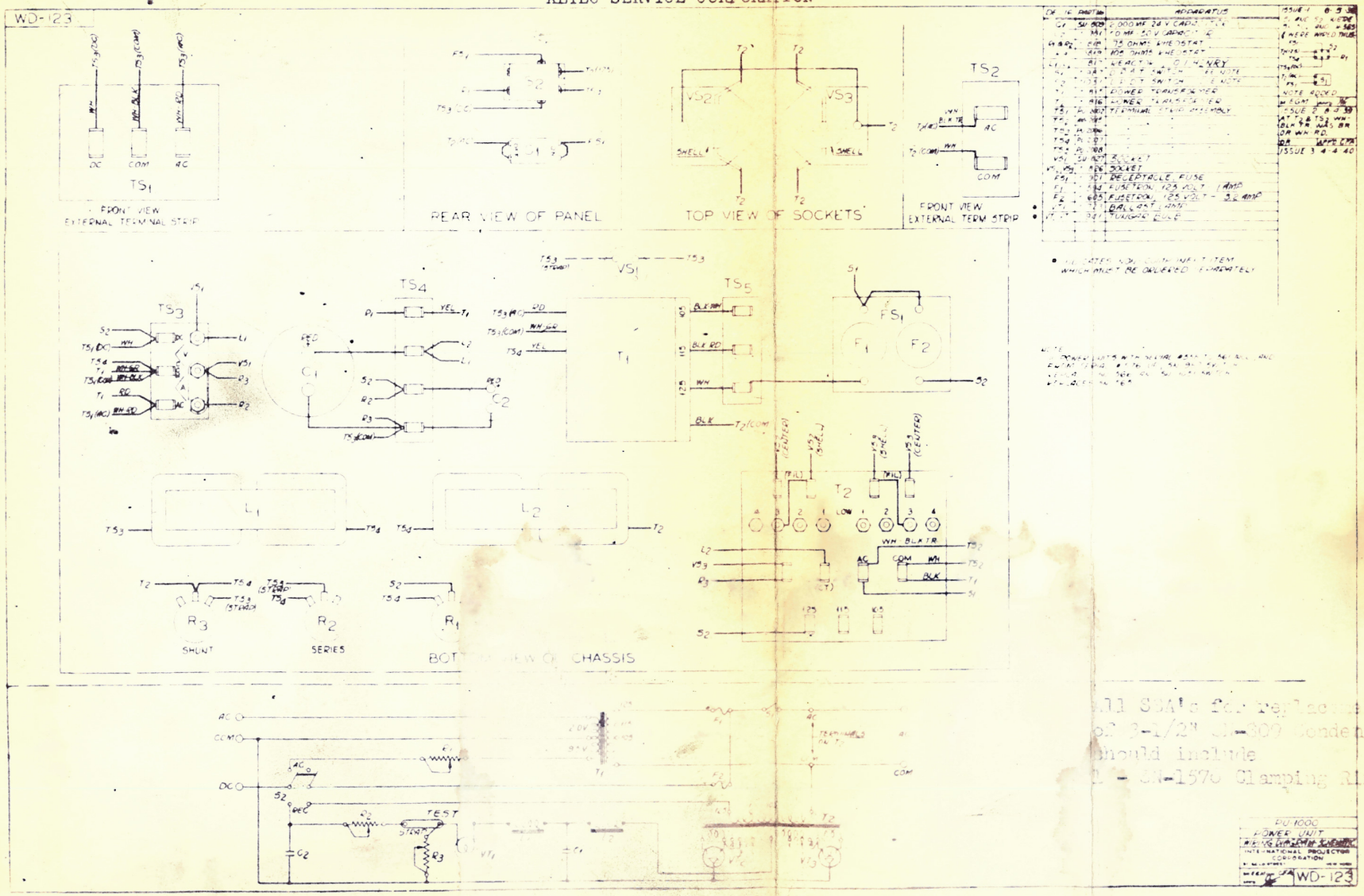

All S/A's for replacements of 3-1/2" C-309 Condenser should include 1 - SK-1570 Clamping Ring

1. DESCRIPTION

Type	- Chassis type - all A.C. Full wave rectifier.
Tubes	- Six 523 Vacuum Tubes.
Output	- Maximum of 1.4 amps. at 110 V. DC to energize the fields of 4 to 6 speakers.
Power Supply	- 100/125 Volts AC 50-60 cycles, 500 Watts.
Fusing	- One SN-1373 Fusetron (6.25 amps.).
Dimensions	- 8-1/2" high x 17" wide x 10" deep.
Weight	- 42 lbs.
Accessories	- Two terminal strips, on extension cable forms for external connections.
Associated Dwg.	- WD-182 - Wiring & Schematic.

2. INSTALLATION

The PU-1001 should be installed in an AM-2023 Cabinet in the location shown on the system conduit layout drawing. External connections to the terminal strips should be made in accordance with the system wiring diagram.

A. Power Transformer Primary Connections. Transformer T_1 has "125 V", "115 V" and "105 V" Taps. Connections should be made to these taps as follows (see WD-182):

Average Line Voltage	Connect to T_1 Taps
120 - 130	125 Volts (Connections as shipped)
110 - 120	115 Volts
100 - 110	105 Volts

Average line voltage is the average of line voltage readings taken at regular intervals during operation hours.

B. Power Transformer Secondary Connections. Secondary taps "2" and "4" are provided to maintain constant output voltage with the loud speaker field loads given below. Connections should be made to these taps per the following tabulation:

Stage Speakers	Connect to Secondary Taps	No. 523 Installed
4	2	6
6	4	6

3. OPERATION

Set "AC" switch in "ON" position. Vacuum tubes should begin to warm up immediately.

ALTEC SERVICE CORPORATION

SIMPLEX SOUND EQUIPMENT BULLETIN PU-1001 POWER UNIT

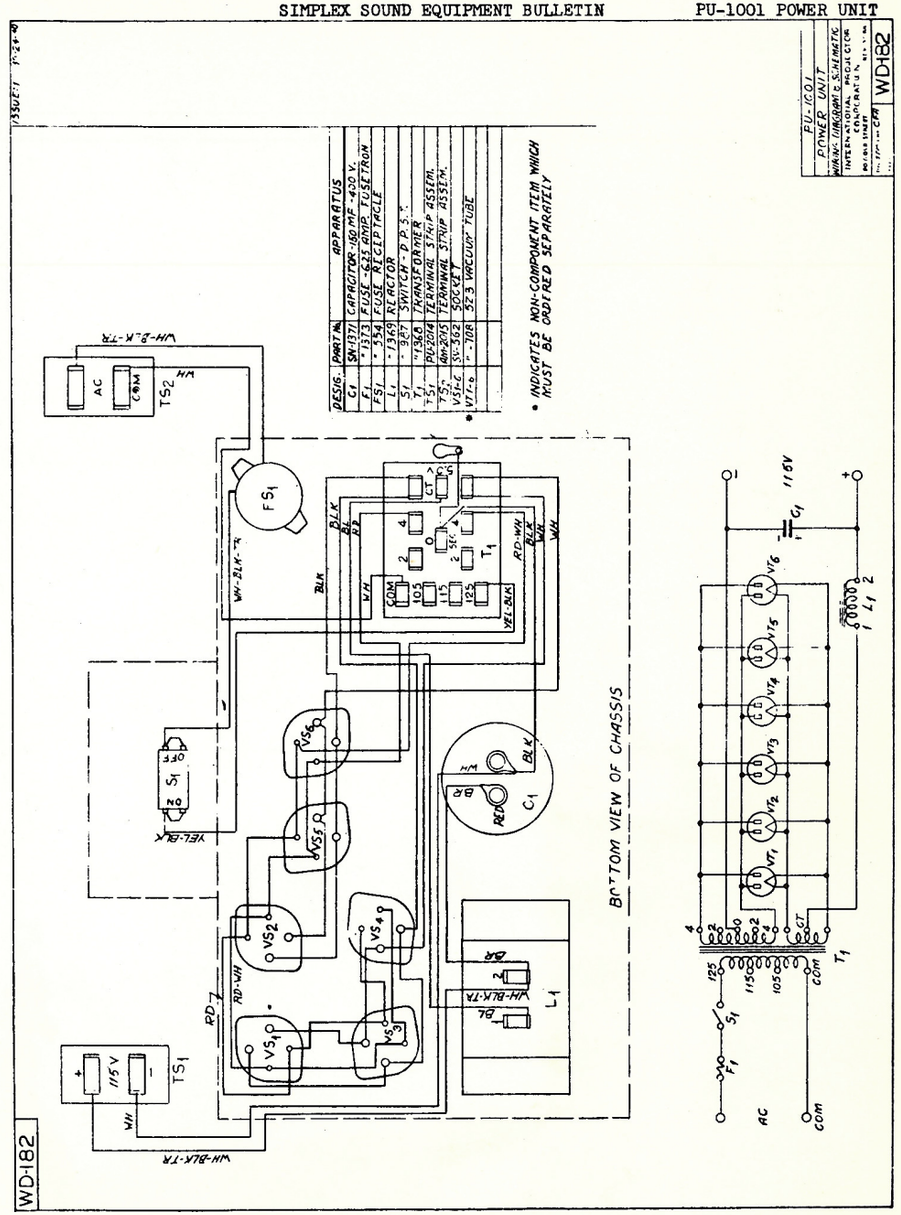

Printed in U.S.A.

1. DESCRIPTION.

Type	-	Chassis Type. All AC. Full wave rectifier.
Tubes	-	2 or 4 5Z3 vacuum tubes (See Sec. 2-B).
Output	-	Maximum of .75 Ampere at 220 V DC (maximum ripple voltage 1%) to energize the fields of 2 to 6 stage speakers.
Power Supply	-	100 - 130 V AC 50 - 60 cycles - 300 watts.
Fusing	-	One 605 (3.2 Amp) Fusetron.
Dimensions	-	8-1/2 H x 17" W x 10" D.
Weight	-	42 lbs.
Accessories	-	Supplied with two terminal strips on extension cable forms for external connections.
Associated Drawing	-	WD-140 Schematic & Wiring.

2. INSTALLATION.

The PU-1003 should be installed in the AM-2023 Cabinet in the location shown on the system conduit layout drawing. External connections to the terminal strips should be made in accordance with the system wiring diagram.

A. Power Transformer Primary Connections. Transformer T_1 has "125 V", "115 V" and "105 V" taps. Connections should be made to these taps as follows (See WD-140):

Average Line Voltage	Connect to T_1 Taps
120 - 130	125 V (Connection as shipped)
110 - 120	115 V
100 - 110	105 V

Average line voltage is the average of line voltage readings taken at regular intervals during operating hours.

B. Power Transformer Secondary Connections. Secondary taps "2" and "4" are provided to maintain constant output voltage with the loudspeaker field loads given below. Two or four 5Z3 vacuum tubes should be installed per the following tabulation.

Number Stage Speakers	Connect to Secondary Tap	Number 5Z3 Installed
2	2	2
4	4	2
6	4	4

3. OPERATION.

Set "AC" Switch in "ON" position. Vacuum Tubes should begin to warm up immediately.

4. MAINTENANCE.

A. Vacuum Tubes. Check output voltage periodically. If below 220 volts replace one vacuum tube at a time until defective tube is located. If above 227 volts check connections to transformer T_1 (see section 2) and determine whether average line voltage has changed since initial installation. The field voltage should be checked at the speaker units and should be 220 V at Speaker.

B. Capacitor. Check clamping ring and nut periodically and tighten if necessary.

Printed in U. S. A.
Issue #2
September 15, 1941

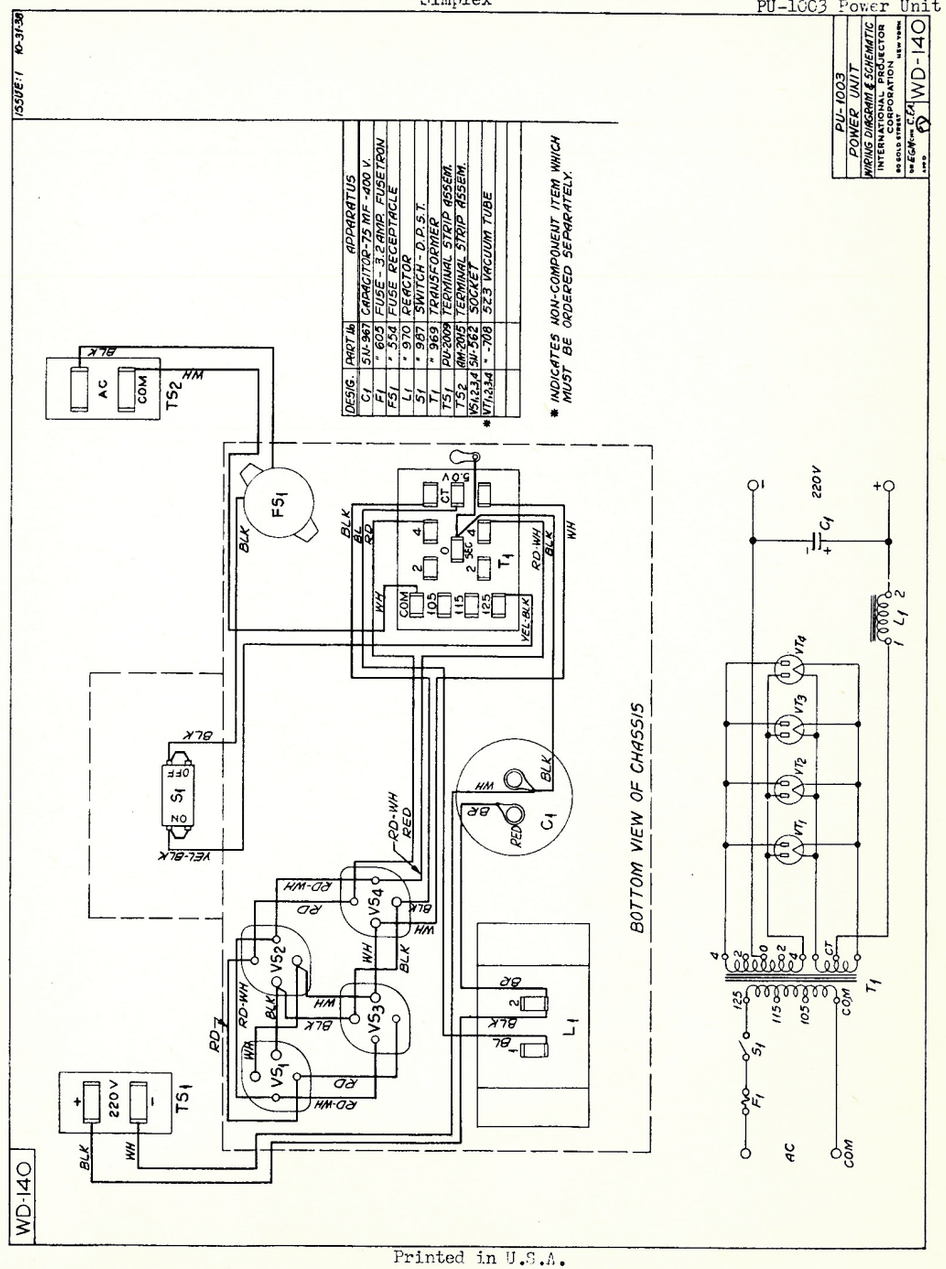
ISSUE: 1 10-31-38
PU-1003
POWER UNIT
WIRING DIAGRAM & SCHEMATIC
INTERNATIONAL PROJECTOR CORPORATION
WD-140
DESIG. | PART No. | APPARATUS
C1 | SN-967 | CAPACITOR-75 MF-400 V.
F1 | " 605 | FUSE-3.2 AMP. FUSETRON
FS1 | " 554 | FUSE RECEPTACLE
L1 | " 970 | REACTOR
S1 | " 987 | SWITCH-D.P.S.T.
T1 | " 969 | TRANSFORMER
TS1 | PU-2009 | TERMINAL STRIP ASSEM.
TS2 | AM-2015 | TERMINAL STRIP ASSEM.
VS1,2,3,4 | SN-562 | SOCKET
* VT1,2,3,4 | " -708 | 5Z3 VACUUM TUBE
* INDICATES NON-COMPONENT ITEM WHICH MUST BE ORDERED SEPARATELY.
BOTTOM VIEW OF CHASSIS
WD-140

1. DESCRIPTION.

A. Use. Exciter lamp supply. Consists of a step-down transformer, having six leads, in a wall mounting metal cabinet with a wiring compartment at the bottom.

B. Power. Primary, 105 - 125 volts, 50 - 60 cycles, AC.
Secondary, 7.5 amperes at 9.3 volts AC.
2.5 amperes at 0.7 volts AC.

C. Power Consumption 85 Watts.

D. Size 6-3/4" high x 5-1/4" wide x 3-7/8" deep.

E. Weight approximately 10 lbs.

2. INSTALLATION.

A. Mounting. The PU-1005 should be mounted on the front wall of the Projection Room between the two machines, in a convenient accessible location as shown on the system conduit layout.

B. External Connections should be made to the transformer, by approved splices, per the system wiring diagram and the schematic below. For maximum exciter lamp life, the primary connections should always be made to the "Red" and "White" leads unless the line voltage (steady or surge voltage) never rises above 115 volts and the system gain is, at the same time, insufficient. The unused primary lead should be taped.

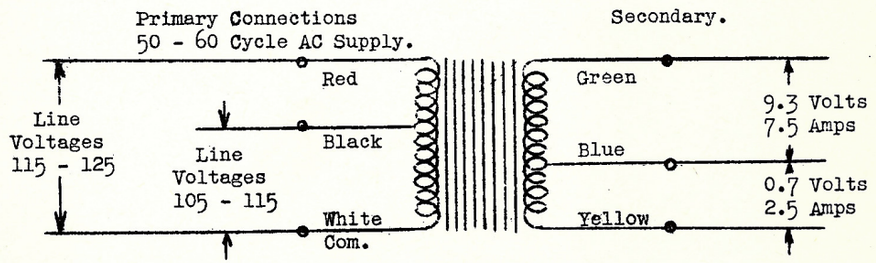

1. PU-1014 POWER SUPPLY CABINET

   a. This cabinet, designed to mount a modified PU-1011 Power Supply, replaces the PU-1012 Power Supply Cabinet in the XL101 and the XL532 and XL536 Series Sound Systems.

   b. The PU-1014 differs from the PU-1012, in which the original PU-1011 mounted, in that the two receptacles that accommodated the AM-1064 Control Units or PU-1013 Dummy Load(s) and the associated cable form have been omitted and three dummy load resistors, for plate voltage adjustment, are mounted on the terminal board.

   c. These three dummy load resistors, which eliminate the need for the PU-1013 Dummy Load(s) in these systems, should be strapped in accordance with IN-138.

   d. PU-1014 Power Supply Cabinet is now being shipped with new systems.

2. PU-1011 POWER SUPPLY

   a. The modification of this unit consists of changing R2 from 15,000 ohms to 10,000 ohms.

   b. The original PU-1011 was designed to supply plate and heater power for up to eight AM-1065 Pre-Amplifiers and two AM-1064 Control Units in the XL432 and XL436 Series Sound Systems.

   c. The XL232 and XL236 Series Sound Systems have a maximum of four AM-1065 Pre-Amplifiers and one AM-1064 Control Unit. One PU-1013 Dummy Load was supplied to adjust the plate voltage.

   d. In the XL101 System, having only two AM-1065 Pre-Amplifiers, two PU-1013 Dummy Loads were shipped for plate voltage adjustment.

   e. The modified PU-1011 Power Supply, mounted in the PU-1014 Power Supply Cabinet, will be used in the XL101 and the XL532 and XL536 Series Sound Systems.

   f. The modified PU-1011 Power Supply may be used as a replacement for the original PU-1011 in XL232, XL236, XL532, XL536 Series Sound Systems and in the XL101 Sound System. However, the plate voltage should be checked when the replacement is made and the strapping of the PU-1013 Dummy Load(s) changed, as required, to obtain a plate supply close to 300 volts.

   g. When the modified PU-1011 Power Supply replaces the original unit in XL432 and XL436 Series Systems, R2 must be changed to its original value of 15,000 ohms.

   h. The modified PU-1011 Power Supply is now being shipped with new systems.

3. PU-1012 Power Supply Cabinets and PU-1013 Dummy Loads will be available for replacement purposes.

4. ASSOCIATED DRAWINGS

IN-138	PU-1014	Power Supply Cabinet, Dummy Load Resistor Strapping
W-1152	PU-1011	Power Supply, Wiring Diagram
W-1153	PU-1011	Power Supply, Schematic

Issued by
Engineering Department
Printed in U. S. A.

May 29, 1956
Issue #1

W-1152

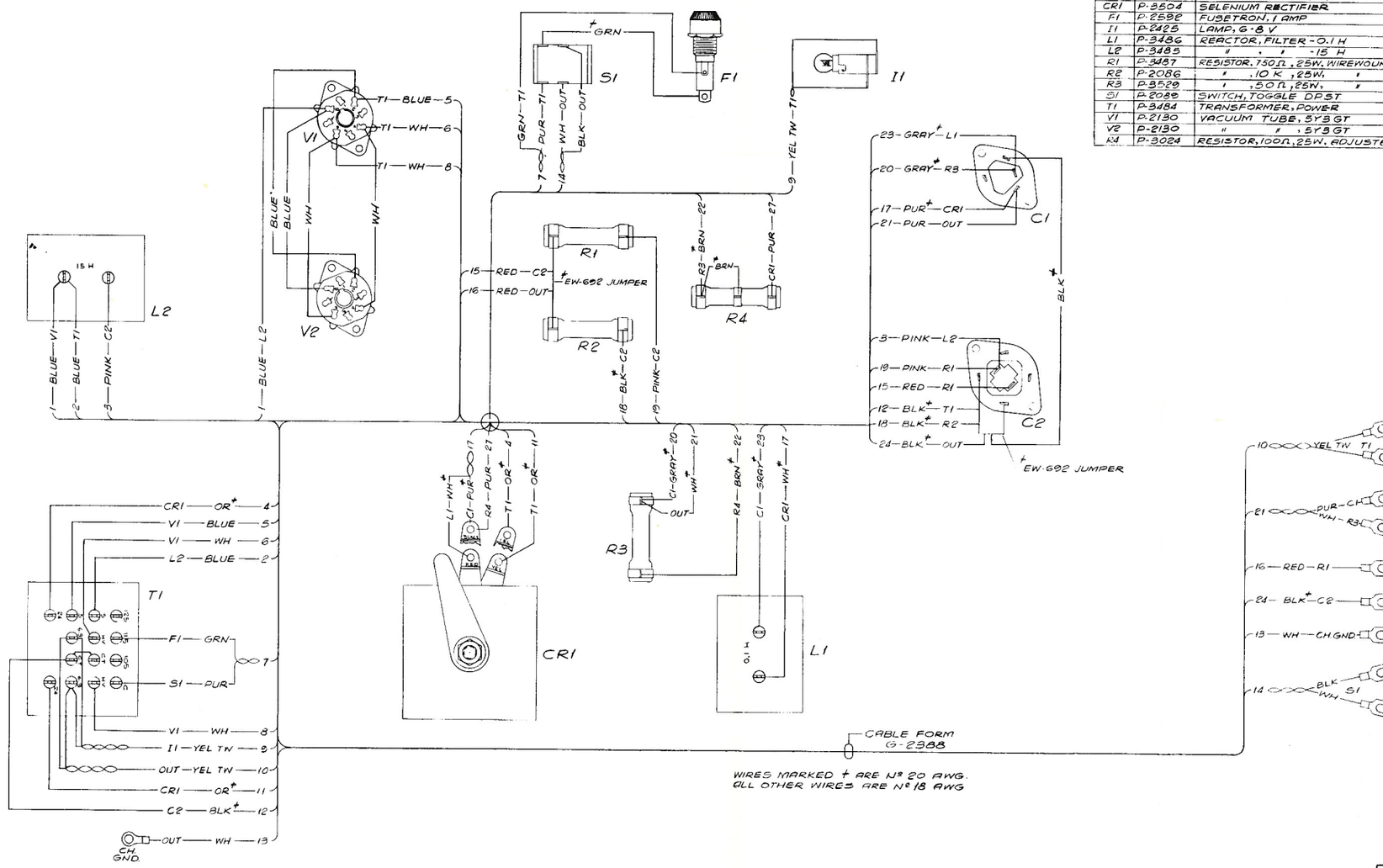

SYMBOL	PART Nº	DESCRIPTION
C1	P-3483	CAPACITOR, 500 MF, 25V. ELECTROLYTIC
C2	P-2084	" , 40-40 MF, 450V, "
CR1	P-3504	SELENIUM RECTIFIER
F1	P-2592	FUSETRON, 1 AMP
I1	P-2425	LAMP, 6-8 V
L1	P-3486	REACTOR, FILTER - 0.1 H
L2	P-3485	" , " -15 H
R1	P-3487	RESISTOR, 750 Ω, 25W, WIREWOUND
R2	P-2086	" , 10 K, 25W, "
R3	P-3529	" , 50 Ω, 25W, "
S1	P-2089	SWITCH, TOGGLE DPST
T1	P-3484	TRANSFORMER, POWER
V1	P-2130	VACUUM TUBE, 5Y3GT
V2	P-2130	" " , 5Y3GT
R4	P-3024	RESISTOR, 100 Ω, 25W, ADJUSTABLE

DRAWN 10-29-53
ISSUE: 1- 11-13-53
F1 WAS P-2499, 2 AMP
ISSUE: 2 11-23-53
IN TABLE "R1" RESISTOR 750 Ω WAS 500 Ω
ISSUE: 3- 12-14-53
IN TABLE "R2" WAS P-3488 15K
ISSUE: 4 - 2-15-56

REFERENCE DWGS.
W-1153 SCHEMATIC
PU-1011 POWER SUPPLY

SCALE

WIRING DIAGRAM

PU-1011 POWER SUPPLY

INTERNATIONAL PROJECTOR CORPORATION
55 LA FRANCE AVENUE
BLOOMFIELD NEW JERSEY

DR. CH'K. APP'D.

PRODUCT CLASS

F

W-1152

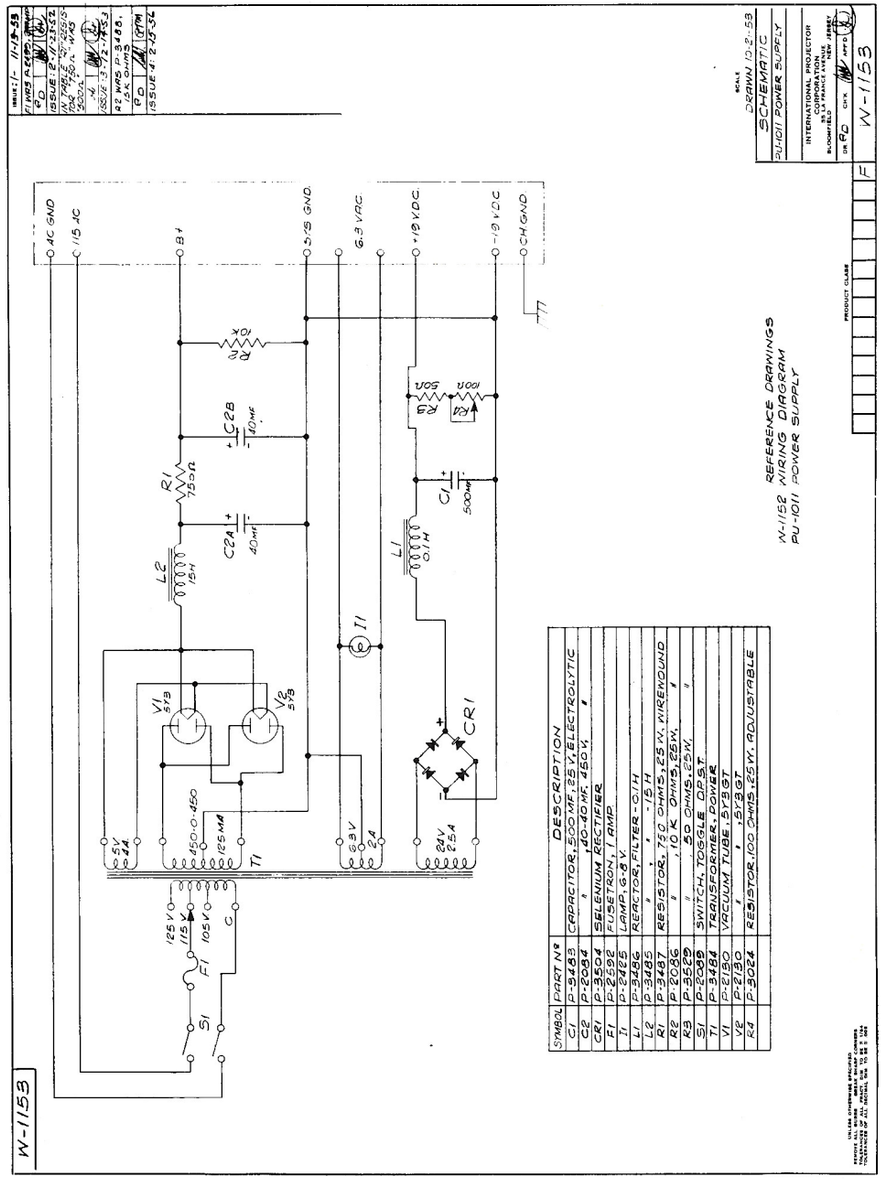

Issued by
Engineering Department
Printed in U.S.A.

IN-138

DRAWN 2-13-56

ISSUE :1 2-14-56

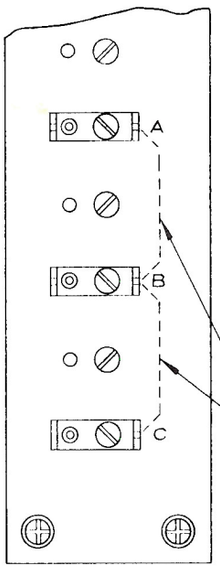

STRAP AS PER CHART

FOR INSTALLATIONS USING:			STRAP
NO. OF AM-1065 PRE-AMPLIFIERS	NO. OF AM-1028 PRE-AMPLIFIERS	NO. OF AM-1064 CONTROL UNIT	
3 OR 4	3	NONE OR 1	AS SHIPPED (NONE)
3 OR 4	1	NONE OR 1	A TO B
2	NONE	NONE	A TO B AND B TO C

G-2561 TERMINAL BOARD
FOR PU-1014 POWER SUPPLY

SCALE ~

INSTRUCTIONS FOR
STRAPPING PU-1014
DUMMY LOAD RESISTORS

INTERNATIONAL PROJECTOR CORPORATION
55 LA FRANCE AVENUE
BLOOMFIELD NEW JERSEY

DR. CH'K. APP'D.

UNLESS OTHERWISE SPECIFIED
REMOVE BURRS BREAK CORNERS
TOLERANCES:
FRACT. DIM. ± 1/64
DECIMAL DIM. ± .005
ANGULAR DIM. ± 1/2°

MAT'L.
MAT'L. SPEC.
FINISH

PRODUCT CLASS F

IN-138

Issued by
Engineering Department
Printed in U.S.A.

1. DESCRIPTION

The SH-1000 (SH-1001) designed for operation for single or push-pull sound track (when using SH-106 Push Pull Kit) on 35 mm film has a black outside, white inside finisned casting with exciter lamp compartment in rear.

A motor assembly (furnished separately), either SH-2053 - 60 cycles, SH-2052 - 50 cycles, or SH-2063 - D.C., including motor and flywheel, flywheel guard and hand brake, is attached to the front of the sound mechanism and drives the projector mechanism and constant speed sound and holdback sprockets in the mechanism through a reduction gear box which may be removed as a unit. The takeup is driven from the mechanism. Belt drive is standard but chain drive may be obtained.

The scanning system, including rotary stabilizer, is assembled on a bracket attached to the sound system by special vibrationless mounting. Prefocused exciter lamp used. Light beam from optical system, after passing through sound film, is reflected to vertically mounted P.E.C. by an adjustable mirror.

Noise level - 35 db or better, flutter .15%, maximum weave ± .001", pick-up time 2 - 3 seconds.

P.E.C. Voltage and exciter lamp supply are obtained from separate sources.

2. MOTORS

Operate on 105/125 V. A.C., 50 or 60 cps ±3% - or 105/125 V. D.C.
5 amp. fusetron recommended for each circuit.

3. INSTALLATION

Remove all existing equipment from the projector pedestals, and install the sound head supports supplied with the system (see table).

Pedestal	Sound Head Support	
"L"	SN-483	
"R" or "M"	SN-484	
Super Simplex or SI	S-1183-L (Up to 20°)	OR
	S-1244-L (Above 20°)	

Clean all parts of the sound mechanism carefully and install to sound head support as follows:

A. Main Frame Assembly. Bolt to the sound head support with four SN-476 Screws (3/8-16 x 1-1/4") and SN-477 Washers. Insert two upper bolts, hand assembly in slotted holes in support and thread in two lower bolts.

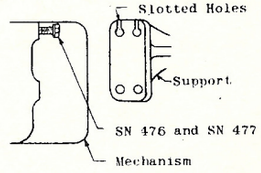

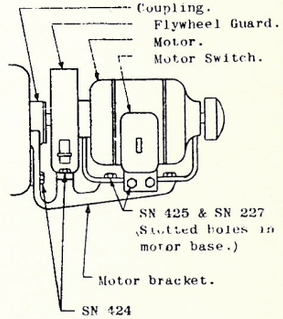

B. Motor Assembly. The motor and flywheel, motor switch box, attached to the motor by flexible conduit, and flywheel guard are shipped mounted on the motor bracket. Remove the motor, motor switch and flywheel guard (see Paragraph C below) from the bracket and mount the bracket on the front of the sound mechanism with four SN-424 Screws (5/16-18 x 3/4"). Mount motor, motor switch and flywheel guard. In assembly the motor shaft slides into the flexible coupling on the gear box drive shaft, the motor is positioned laterally so that it lines up with the coupling, the mounting bolts tightened and the Allen set screws in the coupling tightened.

NOTE: Slotted holes are provided in the motor base and clearance holes in the motor bracket for alignment purposes. For lateral alignment, loosen the motor mounting bolts and shift the motor horizontally. For vertical alignment, loosen the motor bracket mounting bolts and adjust the vertical position of the bracket.

C. Flywheel Guard and Brake. For installation, remove the brake from the guard by loosening the set screw and driving out the pin. To remove the guard from the motor bracket, withdraw the two SN-424 Screws (5/16-18x3/4"). To reassemble the guard and brake, the procedure is reversed.

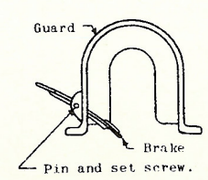

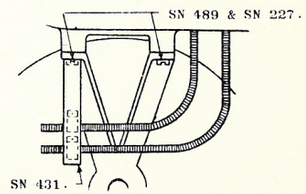

D. Lower Magazine. Bolt the lower magazine and SN-431 Cable Clamp Bracket to the bottom of the sound mechanism, using two SN-489 Screws (5/16-18 x 7/8") and SN-227 Washers. The contractor

should furnish the cable clamps and should clamp the cables securely so that they do not contact the take-up drive belt.

E. Take-up Belt. Adjust length as required and assemble. The take-up is driven from the sound mechanism.

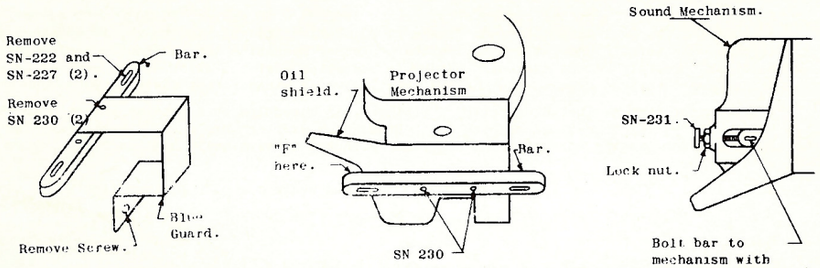

F. Projector Mechanism is installed as follows:

(1) Remove the blue guard on the non-operating side of the sound mechanism, and the bar on the top of the mechanism as a unit, by taking out the screw on the side of the mechanism and the two SN-222 Screws (5/16-18 x 1") and SN-227 Washers fastening the bar to the mechanism.

(2) Detach the blue guard from the bar and discard. Save the two SN-230 Screws (3/8-16 x 5/8") as they are used to bolt the bar to the projector mechanism.

(3) Fasten the oil shield and bar to the mechanism with the two SN-230 Screws. "F" on the bar should be at the front.

NOTE: The SN-475 Oil Shield is used with Regular Super Simplex and E-7 Projector Mechanisms. The SN-493 Oil Shield is used with Model SI Mechanism.

(4) Mount the projector mechanism oil shield and bar assembly on the sound mechanism with two SN-222 Screws and SN-227 Washers through the slotted holes in the bar. Be sure that the SN-231 Screw, on the front of the mechanism, is threaded all the way in for clearance in mounting the drive gear.

(5) Install the drive gear and stud supplied with the system (see table).

Mechanism	Drive Gear	Stud
Regular	SH-2005	SH-2007
Super Simplex	SH-2005	SH-2007
E-7 or SI	SH-2060	SH-2008

(6) Turn the adjusting screw on the front of the mechanism so that proper mesh is obtained between the drive and driven gears. Tighten the lock nut and mounting bolts.

G. Upper Magazine. Bolt to the top of the projector mechanism.

H. Conduit Connections to Sound Mechanism. The coaxial cable should be installed in accordance with the equipment instruction packed with the cable. Flexible conduits should be installed and connected in accordance with the system wiring diagram. Be sure that the threads in the holes in the sound mechanism are clean so that the flexible conduit connectors make good contact when threaded into the holes.

I. Damping Wheel. The SH-2026 Damping Wheel is shipped separately, and should be unpacked, handled and installed carefully to prevent damage. The following installation procedure should be followed carefully in order to insure proper installation and operation of the damping wheel, especially with regard to end play. Too much end play will cause weaving of the scanner drum and result in sprocket hole and frame line noise.

(1) Remove the SN-357 Screw and nut from the drum shaft on the non-operating side of the sound mechanism. The two loose spring washers on the shaft should not be removed.

(2) Unpack the damping wheel carefully, and make sure that all foreign material is removed from the mounting hole.

(3) Slide the damping wheel carefully onto the shaft while holding the scanner drum (operating side of Mechanism) against its shoulder. Line up the mounting holes in the shaft and wheel,

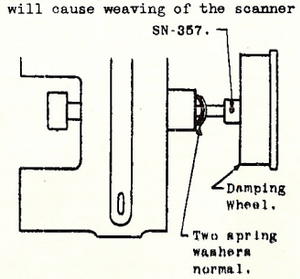

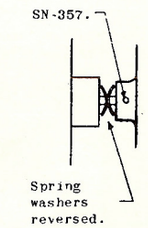

insert the screw, removed under (1) above, in the counter-bored hole in flange and tighten securely so that the slotted flange is clamped to the drum shaft. The nut removed under (1) above is not used.

(4) Check the assembly for end play. The spring washers should hold the scanner drum firmly against its shoulder - that is, the spring washers should be under compression at all times. Therefore, push the stabilizer drum carefully toward the operating side as far as it will go and release it. If the scanner drum does not return and seat firmly against its shoulder, there is too much end play. The damping wheel should then be removed, and one of the spring washers reversed. This will increase the effectiveness of the washers and should give the proper amount of end play.

J. Rear Guard. Atrach to the non-operating side of the main frame assembly, tightening the thumb screws securely.

K. Install the exciter lamp and photo-electric cell supplied with the system.

SN-297 Exciter Lamp (4 amps, 8 volts) - Systems having PU-1000 Power Unit.
SN-298 Exciter Lamp (7-1/2 amps, 10 volts) - Systems having PU-1005 Power Unit.

L. Fill the gear box on the non-operating side slowly with SAE #40 Oil (1-1/2 ounces required) to the red line of the sight glass while the mechanism is idle.

CAUTION: Do not add oil while the mechanism is running. Oil taken up by the running gears will drain into the bottom of the gear box when the mechanism is idle. The oil level will then be too high and leakage may occur around the bearings, especially with large projection angles.

Oil leakage around the bearings may be due to clogged oil return holes in the gear box casting, preventing oil thrown on the bearings from returning to the gear box. If such a condition is encountered (with correct oil level in the gear box) the gear box should be taken out of the sound mechanism, the retainer ring removed from each bearing and the oil return hole carefully cleaned with a toothpick or similar device by pushing the grease deposit down into the gear box.

M. Adjustment of Scanning System. The main frame assembly is shipped with the exciter lamp bracket, lens tube, lateral guide roller and reflector lens mounted and adjusted ready for use. It is recommended, however, that the adjustments be checked. Use Buzz Track Film to check the adjustment of the lateral guide roller. Use the Academy Standard Scanning Illumination Test Track to check the exciter lamp adjustment and for final precise adjustments of the lateral guide roller.

Before proceeding, however, it is extremely important that the exciter lamp, photo-electric cell and lenses be thoroughly cleaned with lens tissue, and all parts of the sound mechanism cleaned with a soft cloth. Refer to Equipment Bulletin "SH-106 Push Pull Kit", File 40.35, Addendum #1, Issue #1, for adjustments of push-pull scanner system.

(1) Exciter Lamp Bracket. Vertical and lateral adjustment are provided for the prefocused base exciter lamp. For vertical adjustment, loosen the clamping screw on the left of the bracket, and adjust the vertical knurled screw at the bottom as required. For lateral adjustment a screw and lock nut are provided on the front of the bracket. To move the bracket inward, loosen the screw and slide the bracket in. To move the bracket outward, tighten the screw. After the adjustments have been completed, be sure that the clamping screw and nut are tight. Check the adjustment with the Academy Standard Scanning Illumination Test Track (See supplement).

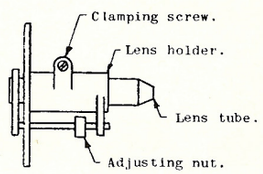

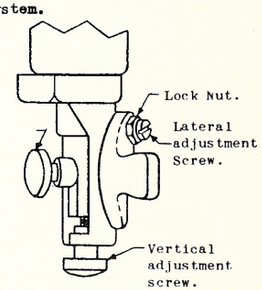

(2) Lens Tube. The lens tube is accurately adjusted for azimuth and properly focused before shipment. The azimuth adjustment should not be disturbed. To focus the lens tube, loosen the clamping screw above the lens holder and turn the knurled adjusting nut below as required. Be sure the clamping screw is tightened after the adjustment has been completed. Two methods of adjustment, using the Academy 8,000 Cycle or Multi-Frequency Test Film, may be used - the response test or flicker test.

(a) Response Test. Thread the machine with the test film, run the machine and adjust the lens tube for focus until maximum response is obtained on a volume indicator or aurally.

(b) Flicker Test. Thread the machine with the test film, place a white card between the film and reflector lens and turn the motor hand wheel slowly. The film frequency lines make a definite flicker of light on the card. The tube is focused when the lines are stationary. If they move downward on the card, the lens tube should be closer to the film - while if they move upward, the tube should be farther from the film.

(3) Reflector Lens (Single track film only). If properly adjusted the spot on the photo-cell should be about 7/16" in diameter and centered on the anode of the cell. To position the spot of light, loosen the clamping screw at the top of the lens holder and carefully rotate the lens until the spot is centered on the anode. To change the size of the spot, move the lens in or out of the bracket as required. If further movement is required, loosen the two lens holder mounting screws and adjust as necessary. Slotted holes are provided in the lens holder. These adjustments are more readily made if the photo-electric cell is removed and a piece of transparent paper substituted.

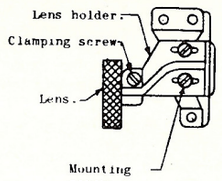

(4) Pressure and Guide Roller. To adjust, loosen the locking screw in the center of the knurled adjusting nut and turn the nut as required. Clockwise rotation moves the roller inward. Be sure that the spiral spring at the rear of the pressure and guide roller holds it firmly against the knurled adjusting nut at all times. When properly adjusted the scanning beam does not strike the frame lines or sprocket holes. Check the adjustment, using Buzz Track Film, and make final precise adjustments with Academy Standard Illumination Test Track.

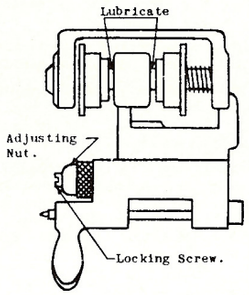

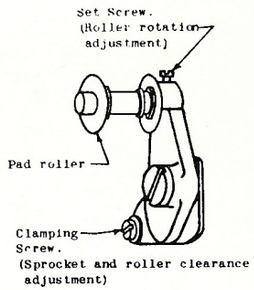

(5) Pad Rollers. The clearance between the sound and hold-back sprockets and their pad rollers should be equal to two thicknesses of film. To adjust, loosen the fillister head clamping screw, insert two thicknesses of film between the roller(s) and sprocket, press the roller(s) firmly against the film and tighten the screw.

The roller(s) should rotate freely. To adjust, loosen the set screw at the top of the bracket, grasp the knurled roller stud, pull carefully until the roller rotates freely and tighten the clamping screw. Do not allow more clearance than is necessary for free rotation.

(6) Lubrication. See Lubrication Chart.

(7) Threading Film in the Sound Mechanism. Film should be threaded in the projector mechanism in accordance with the instructions furnished therewith, and in the sound mechanism in accordance with the following sketch:

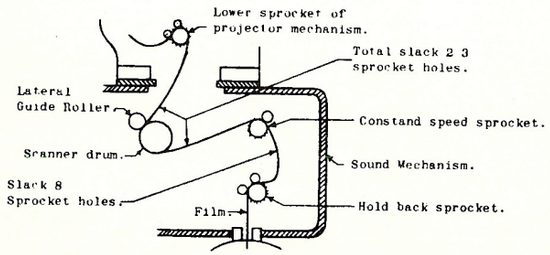

4. OPERATION

A. Clean the mechanism thoroughly each day. It is extremely important that all glassware, reflector lens and lens tube lenses be thoroughly cleaned with lens tissue as these surfaces accumulate particles, such as carbon dust, rapidly with resulting loss in gain.

B. Threading the Mechanism. Thread the mechanism in accordance with the instruction in the previous section. The lateral guide roller must be closed after threading. If the sound mechanism door does not close, the guide roller is open.

C. Lateral Guide Roller Assembly. Pull the guide roller assembly outward, after threading is completed and the roller is closed, until it is in firm contact with the knurled adjusting nut. There is a spring on the stud at the rear of the assembly to hold it firmly against the adjusting

nut. In some instances, however, the assembly may be pushed inward as it is closed and may not return to its proper position due to friction. Sprocket hole noise will occur and can not be remedied by adjustment.

If the assembly has an unusual tendency to stick, the following should improve the condition:

(1) A drop of Simplex Oil should be applied on the supporting stud between the knurled nut and the assembly. Distribute the oil along the stud by pushing the assembly back and forth and opening and closing it several times. Wipe off all excess oil.

(2) Increase the length of the spring at the rear of the assembly from 13/16" to 1-1/8". The effectiveness of the spring will increase and will aid in returning the assembly to its proper position. To increase the length of the spring, remove the assembly and spring and stretch each spring coil carefully until the length is 1-1/8". It is essential that the lengthening be done carefully so that the ends remain perpendicular to the axis of the spring.

(3) In some of the earlier sound mechanisms the threads on the stud were over-size and may tend to cause the assembly to stick. The assembly should then be removed, and fine emery cloth used carefully on the threads only and not on the stud shaft. Clean all parts carefully.

Leave the guide roller open when there is no film in the mechanism. If it is left closed, flat spots will develop on the felt rollers, will cause flutter and make replacement necessary.

5. MAINTENANCE

A. General. Oil, dirt and other foreign material in the mechanism will impair the quality of reproduction, increase wear and eventually cause interruptions in the show and an increase in replacements. Careful cleaning and daily inspection, on the other hand, will insure continued uninterrupted high quality sound.

B. Lateral Guide Roller Assembly. Be sure that the guide roller is left open when there is no film in the mechanism. If left closed, flat spots will develop on the felt rollers, will cause flutter and make replacement necessary. The guide roller assembly must be removed to replace a felt roller.

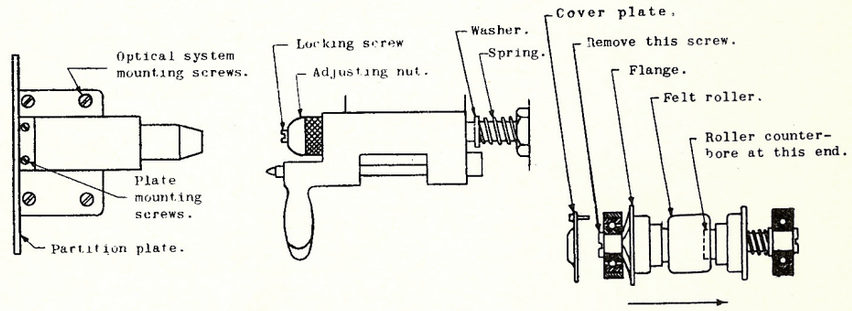

Slide as indicated by arrow.

(1) Removal and Reinstallation of Guide Roller Assembly.

(a) Remove the exciter lamp bracket.
(b) Remove the photo-electric cell and rear photo-electric cell shield.
(c) Remove the two screws holding the partition plate in place and slide out the partition plate.
(d) Remove the four screws mounting the entire optical system and lift out the optical system carefully.
(e) Remove the lateral guide roller assembly by first loosening the locking screw in the center of the chromium plated adjusting nut, remove the adjusting nut and slide the entire assembly from the mounting stud. Be sure that the spring and steel washer back of the lateral guide roller assembly remain on the mounting stud.
(f) Reinstall the guide roller assembly and adjusting nut. Do not tighten the locking screw.
(g) Reinstall the optical system, partition plate and exciter lamp bracket.
(h) By means of the adjusting nut locate the guide roller assembly laterally so that the scanning beam is properly positioned on the sound track, using buzz track and 17-position track film.

In making the above adjustments, be sure that the guide roller assembly is under tension - that is, that the spring on the mounting stud behind the guide roller assembly is functioning so that the guide roller assembly is in contact with the adjusting nut at all times.

While the removal and reinstallation of the optical system may not seriously affect the focus thereof, the focus should be checked with frequency film at the first opportunity.

NOTE: Assemblies returned should be packed carefully to prevent damage during shipment. Each assembly should be carefully wrapped in clean paper so that packing material, such as excelsior or other foreign matter, does not reach the assembly or damage the felt roller.

(2) Replacement of Felt Roller.

(a) Remove cover plate.
(b) Remove screw under cover plate. Use two screw drivers, one to hold screw on other end of shaft.
(c) Slide roller assembly as indicated in the sketch and remove the flange and felt roller.
(d) Install new felt roller and assemble the unit.
(e) Install the lateral guide roller assembly and adjust per the previous section.

C. Deceleration Time - Rotary Stabilizer

(1) The average deceleration time for the Rotary Stabilizer falls between 50 and 60 seconds, but may, however, be as low as 30 seconds without ill effect on reproduction. The deceleration of the stabilizer shaft and drum depends, to a large extent, upon the temperature of the mechanism and the condition of the oil in the bearings. The test procedure is as follows:

(a) Thread film in the projector and sound mechanism in the regular way and run the projector. The instant that the end of the film leaves the scanner drum, open the lateral guide roller - the checking time begins at this moment.
(b) When making the above test, it is important to watch that a smooth run-out occurs; that is, that no sudden stops are observed near the end of the run. If sudden stops happen, it is an indication that dirt has entered one or both ball bearings which will necessitate removal of the bearings, cleaning and relubricating them, or a complete replacement of the bearings.

When it becomes necessary to obtain a replacement bearing it should be ordered as:

1 - SN-359 Bearing.

SH-1000, SH-1001 SOUND MECHANISM

WIRING DIAGRAM AND SCHEMATIC

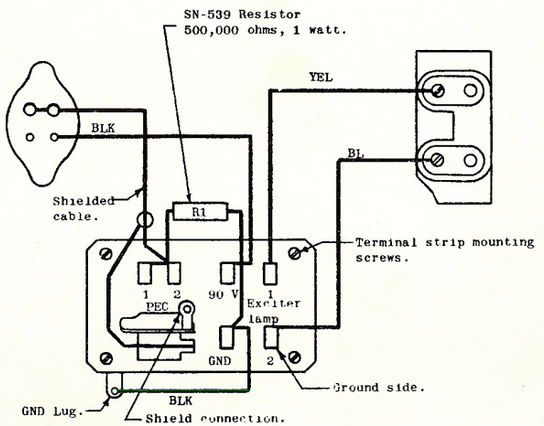

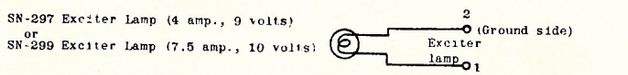

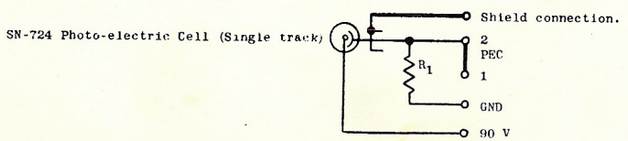

Issued by
Engineering Department
Printed in U. S. A.

SIMPLEX SH-1007, SH-1008 SOUND HEADS

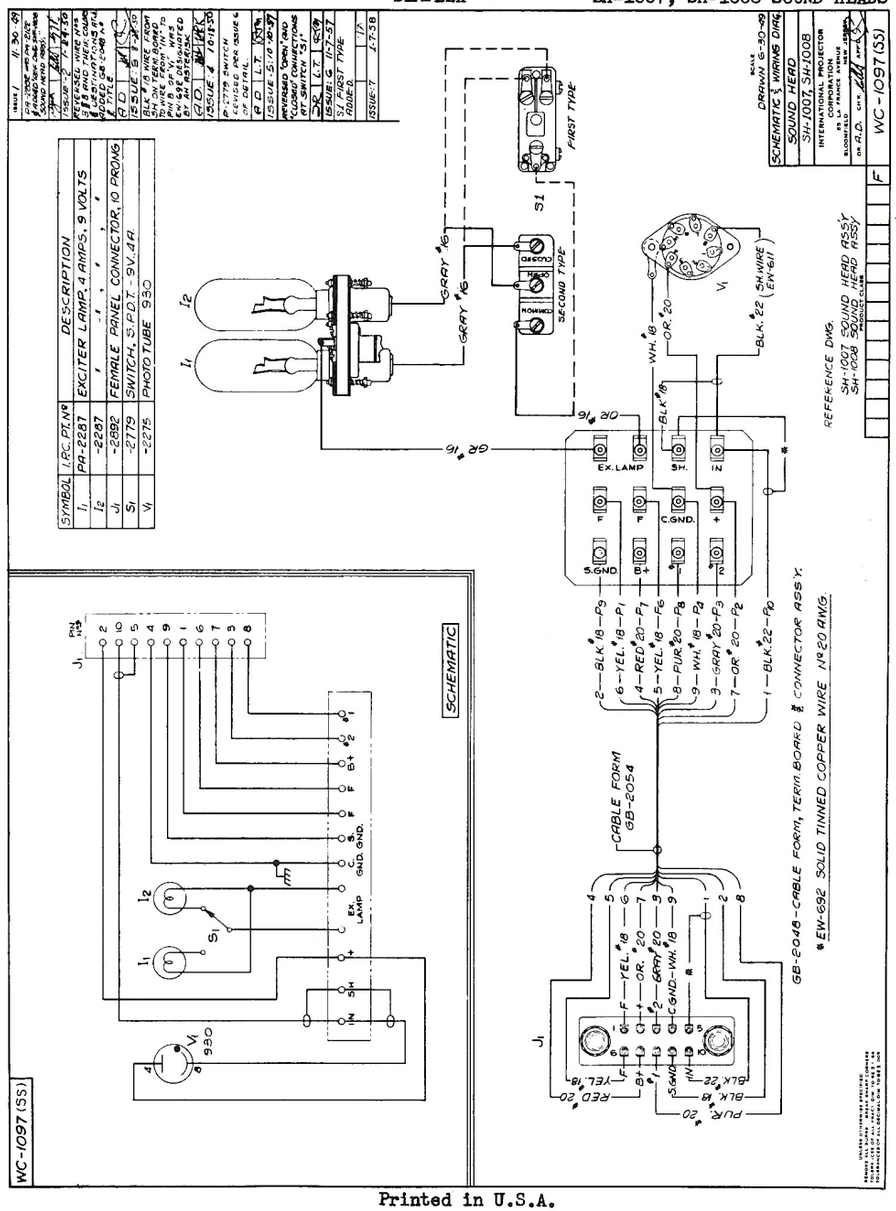

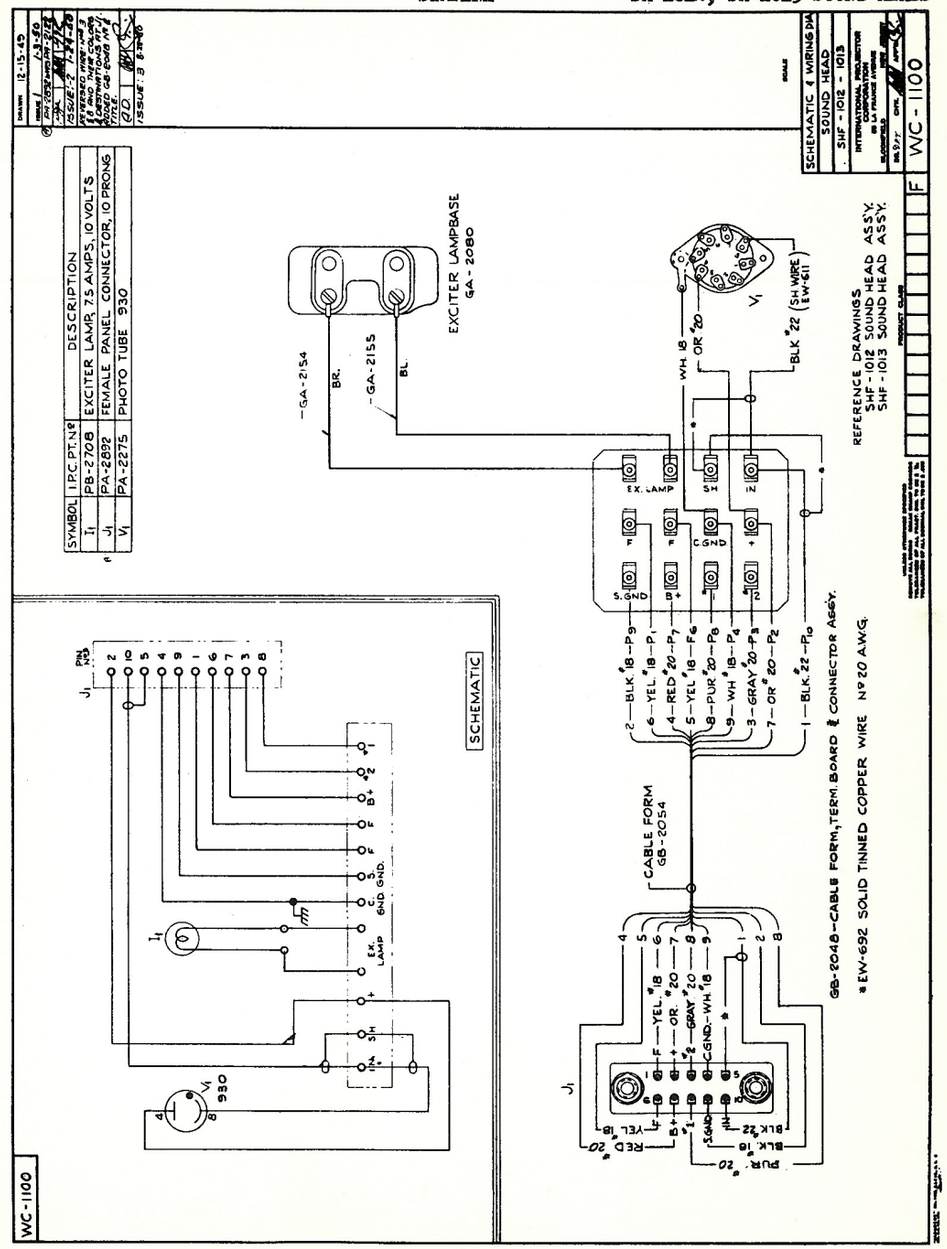
SCHEMATIC & WIRING DIA
SOUND HEAD
SHF-1012 - 1013
WC-1100
SYMBOL | I.P.C. PT. Nº | DESCRIPTION
I1 | PB-2708 | EXCITER LAMP, 7.5 AMPS, 10 VOLTS
J1 | PA-2892 | FEMALE PANEL CONNECTOR, 10 PRONG
V1 | PA-2275 | PHOTO TUBE 930
EXCITER LAMPBASE GA-2080
GA-2154
GA-2155
BR.
BL.
WH. 18
OR #20
BLK #22 (SH WIRE EW-611)
EX. LAMP
SH
IN
C.GND
S.GND
B+
2—BLK #18—P9
6—YEL #18—P1
4—RED #20—P7
5—YEL #18—F6
8—PUR #20—P8
9—WH #18—P4
3—GRAY #20—P3
7—OR #20—P2
1—BLK #22—P10
CABLE FORM GB-2054
GB-2048—CABLE FORM, TERM. BOARD & CONNECTOR ASS'Y.
* EW-692 SOLID TINNED COPPER WIRE Nº 20 A.W.G.
REFERENCE DRAWINGS
SHF-1012 SOUND HEAD ASS'Y.
SHF-1013 SOUND HEAD ASS'Y.
SCHEMATIC
930
WC-1100

Simplex ★★★★ SOUND System

SOUND MECHANISM LUBRICATION CHART

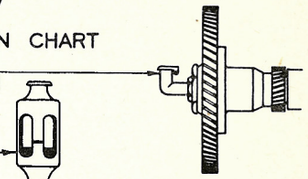

DAILY

FILL OIL CUP CAREFULLY WITH SIMPLEX OIL.

DAILY

ADD SAE #40 OIL AS REQUIRED TO MAINTAIN OIL LEVEL SHOWN WHEN MECHANISM IS AT REST.
(ADD OIL ONLY AFTER MECHANISM HAS BEEN IDLE OVERNIGHT. DO NOT FILL TO RED LINE AFTER INITIAL FILLING WHEN INSTALLED.)

MONTHLY

APPLY 1 DROP OF SIMPLEX OIL TO THE OIL HOLE IN EACH PAD ROLLER.
(ROTATE PAD ROLLER TO DISTRIBUTE OIL.) *

MONTHLY

APPLY 1 DROP OF SIMPLEX OIL TO THE SHAFT AT EACH END OF THE ROLLER. (ROTATE FLANGES TO DISTRIBUTE OIL.) *

SEMI-ANNUALLY

APPLY 1 DROP OF SIMPLEX OIL TO EACH BALL BEARING.
(ROTATE BEARINGS TO DISTRIBUTE OIL.) *

MONTHLY

APPLY A FEW DROPS OF SIMPLEX OIL.

MONTHLY

APPLY 1 DROP OF SIMPLEX OIL TO THE SHAFT. (SLIDE ASSEMBLY IN TO APPLY OIL. OPERATE TO DISTRIBUTE OIL.) *

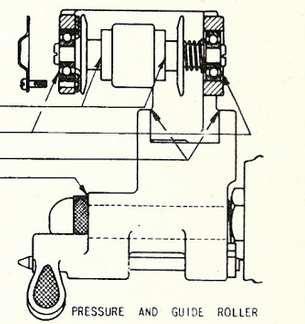

MONTHLY

GIVE EACH GREASE CUP ABOUT 1/2 TURN. DO NOT FORCE TOO MUCH GREASE INTO THE BEARINGS. REFILL WITH SIMPLEX REAR SHUTTER GREASE AS REQUIRED. MARFAK #2 (TEXACO) MAY BE USED AS A SUBSTITUTE.

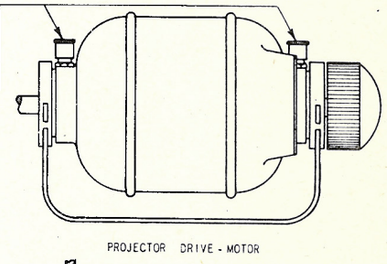

SEMI-ANNUALLY

APPLY 1 DROP OF SIMPLEX OIL TO EACH BALL BEARING.
(REMOVE DAMPING WHEEL AND TWO RETAINER RINGS.
ROTATE BEARINGS TO DISTRIBUTE OIL.) *

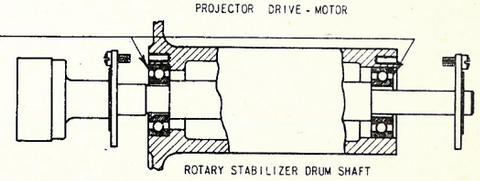

* APPLY SIMPLEX OIL WITH A TOOTHPICK OR PIPE CLEANER. DO NOT OVER-LUBRICATE.
EXCESS OIL SHOULD BE CAREFULLY WIPED OFF WITH CHAMOIS OR LINTLESS CLOTH.

ISSUED BY
SOUND ENGINEERING DIVISION
INTERNATIONAL PROJECTOR CORPORATION
NEW YORK

	SH-1007	SH-1013	
SIMPLEX	SH-1008	SH-1020	X-L SOUND HEADS
	SH-1012	SH-1021	

The supplier informs us that due to difficulties in obtaining the oil gauge used on Simplex Sound Mechanisms, a redesign has been necessary and current shipments include an oil cup instead of the oil gauge.

This oil cup should be filled full of Simplex Sound Mechanism Oil and this level maintained during operation. It will be necessary to check this level by inspection as there is no visual indication of the oil level such as was available on the previous design.

Issued by
Engineering Department
Printed in U.S.A.
January 8, 1951
Issue #1

1. DESCRIPTION

A. Use. In SH-1000 and SH-1001 Sound Mechanisms to convert the mechanism for reproduction of either single track or push-pull film recordings. It may be added initially or at any future date as an extra.

In the SH-106 Push-Pull Kit the combination of signals is obtained by transmitting the signals from the anode of one-half of the cell and the cathode of the other half of the cell to a common point. Thus the phase relationship of the two signals is accomplished, and if the signal strength of each is adjusted to the same value optimum results are obtained.

B. List of Parts (Per Sound Mechanism).

1 SH-2020 Push-Pull Lens & Reflector Assembly (Beam Splitter)
1 SH-2021 Push-Pull Balancing Unit Assembly
1 SN-331 Photo-electric Cell (Push-Pull)

2. INSTALLATION

The procedure for installing the SH-106 Push-Pull Kit in the SH-1000 and SH-1001 Sound Mechanisms is as follows:-

A. Remove the rear guard.

B. Remove the damping wheel. Leave the spring washers on the shaft, and insert a screw in the hole in the shaft so that the shaft does not slide out.

C. Disconnect the external wiring from the terminal strip.

D. Remove the exciter lamp bracket and photo-electric cell.

E. Remove the three sound bracket mounting bolts, and remove the sound bracket as a unit.

F. On the sound bracket, disconnect the exciter lamp wires from the screw terminals of the exciter lamp base.

G. On the photo-electric cell bracket remove the bottom plate, and disconnect the wires from the photo-electric cell socket.

H. Remove the present terminal strip, blank plate and internal wiring.

I. Remove the reflector lens and bracket from the sound bracket.

J. Install the SH-2020 Push-Pull Lens & Reflector Assembly on the sound bracket in place of the present reflector lens bracket (per Figure 2).

K. Install the SH-2021 Push-Pull Balancing Unit Assembly on the sound bracket (per Figure 2).

L. Connect the SH-2021 wires to the exciter lamp terminals and photo-electric cell socket (per Figure 3), replace the plate on the bottom of the photo-electric cell bracket, and re-install the sound bracket.

M. Install the exciter lamp and SN-331 Photo-electric Cell, and close the photo-electric cell shield.

Note:- When single track film is being run, the SN-724 photo-electric cell may be used in place of SN-331.

N. Reconnect the external wires and install the damping wheel and rear guard.

3. ADJUSTMENT OF SCANNER SYSTEM

The method of focusing light on the push-pull sound track is the same as that employed for single track reproduction. However, instead of a reflector being used to project the sound track image on the photo-electric cell as for single track reproduction, the image is passed through a "beam splitter" (having two cylindrical lenses) in such a manner that the image of each track falls on separate cathodes in the push-pull photo-electric cell (see Figure 1). The proper separation of these two sound tracks is dependent upon the correct adjustment of this "beam splitter", both as to focus and position.

A. The Exciter Lamp, Lens Tube and Lateral Guide Roller are adjusted for optimum response at the factory, and should be received ready for operation. If, however, there is definite evidence, during the adjustment procedure described below, that readjustment of these items is required, the method described in the Equipment Bulletin "SH-1000 Sound Mechanism", packed with the mechanism, should be followed.

B. Push-Pull Lens and Reflector Assembly

(1) Positioning Light on Cylindrical Lenses. With the exciter lamp bright and no film in the mechanism, the light (as viewed through a piece of translucent paper placed against the two cylindrical lenses) should practically fill both of the lenses and be centered vertically and horizontally. If necessary adjust the exciter lamp vertically and laterally.

(2) Focusing the Push-Pull Lens & Reflector Assembly. The assembly is in focus when the push-pull film track septum appears as a sharply defined vertical black line on the translucent paper placed against the lenses with the exciter lamp bright.

To focus, thread a standard push-pull film in the mechanism, preferably a variable density sound track, and rotate the motor hand wheel until the film is tight around the drum (in its normal running position). This film position must be maintained throughout the adjustment procedure. Adjust the "beam splitter" laterally, if necessary, so that the sound track septum does not coincide with the division line between the two lenses, and then adjust this assembly longitudinally until the septum is in focus as described above. Tighten the two longitudinal adjusting screws securely. This adjustment must be made carefully to obtain proper separation of the sound tracks and optimum results.

Note - Adjustment will be facilitated by the use of a short piece of 1/16" drill rod in the holes provided in the bracket. (See Figure 2.)

(3) Alignment of Sound Track Septum and Division Line of the Two Lenses. The septum must be in exact alignment with the division line of the two lenses, as viewed on the translucent paper referred to above (exciter lamp bright), to obtain proper separation of the two tracks at the photo-electric cell and maximum cancellation.

This adjustment should be made only after the lens and reflector assembly has been focused per Paragraph (2) above. With the film positioned per the preceding paragraph, adjust this assembly laterally until the septum coincides exactly with the division between the two lenses. This adjustment must be made carefully, and the two adjusting screws tightened securely. Since the location of this septum varies slightly from film to film, and with film age due to shrinkage, the alignment must be checked with each print.

C. Push-Pull Balance. Due to the fact that the two halves of the push-pull photo-electric cell seldom have the same sensitivity, a potentiometer has been provided to vary the potentials applied to the two anodes of the cell in order that this sensitivity may be equalized for push-pull reproduction. This voltage adjustment will also be used to balance out residual unbalance in illumination, but should be resorted to only after the best possible optical balance has been attained.

(1) Optical Balance. Having carefully adjusted the lens and reflector assembly per Section B above, set the switch in "PP" position and the balancing potentiometer in approximately mid-position. Then with the exciter lamp at full brilliancy on alternating current and no film in the machine;

(a) Readjust the exciter lamp laterally for minimum hum level, as indicated on a volume indicator at the main amplifier output.

(b) Finally adjust the potentiometer for minimum hum (preferably with the main system volume control set for maximum volume).

(2) Electrical Balance. Set the switch in "PP" position, operate the exciter lamp on direct current and thread the mechanism with a standard single track frequency film. With the mechanism running, further adjust the potentiometer for minimum signal, as observed on a volume indicator at the output of the main amplifier. The amount of signal cancellation may be observed, using this same film, by switching from "PP" to "STD" position. The difference in level should be 25 db or better.

4. OPERATION

A. Single Track. Set the "STD-PP" switch in "STD" position.

B. Push-Pull. Set the "STD-PP" switch in "PP" position.

Except for the operation of the "STD-PP" switch as described above, the mechanism should be operated in accordance with Equipment Bulletin "SH-1000 Sound Mechanism."

5. MAINTENANCE

The sound mechanism should be maintained in accordance with Equipment Bulletin "SH-1000 Sound Mechanism", except that the push-pull balance should be checked frequently as described above

and especially when a new exciter lamp or photo-electric cell is installed. The alignment of the sound track septum and division line of the two lenses should be checked with each print.

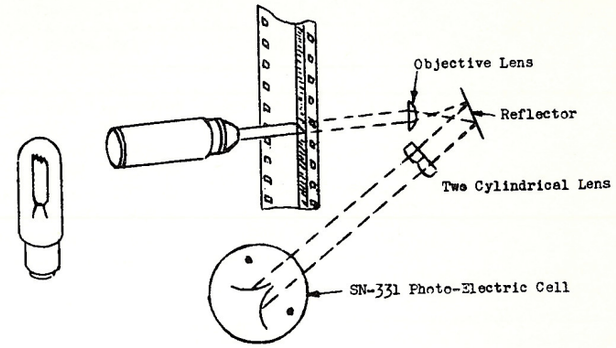

FIGURE 1

OPTICAL SCHEMATIC

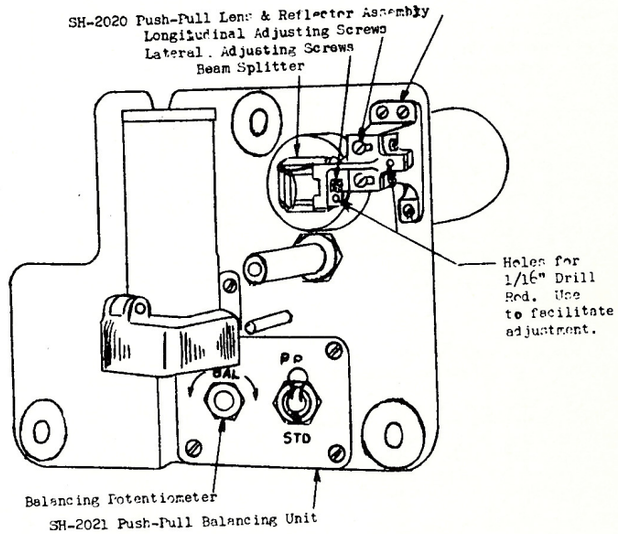

FIGURE 2

SOUND BRACKET SHOWING
SH-2020 Push-Pull Lens and Reflector Assembly
and SH-2021 Push-Pull Balancing Unit Installed.

SH-106 PUSH-PULL KIT

DESIG.	PART NO.	APPARATUS
VT_1	SN-331	Push-Pull P.E.C. (RCA #920)
C_3, C_4	SN-515	.005 Mfd. 500 V. Mica Capacitor
R_3, R_4	SN-517	2 Meg. 1 Watt Resistor
S_1	SN-853	Switch - DPDT Toggle
R_1, R_2	SN-864	500,000 ohm 1/2 Watt Resistor
C_1, C_2	SN-1035	.1 Mfd. 400 V. Paper Capacitor
P_1	SN-1036	100,000 ohm Potentiometer

NOTE: When installing push-pull, connect additional 1/2 meg. 1 watt resistor (R_x) between P.E.C. and ground to flatten bump in characteristic between 100 and 500 cycles.

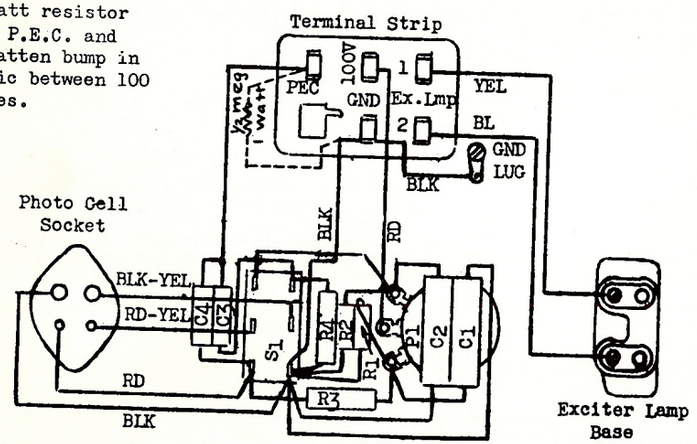

WIRING DIAGRAM

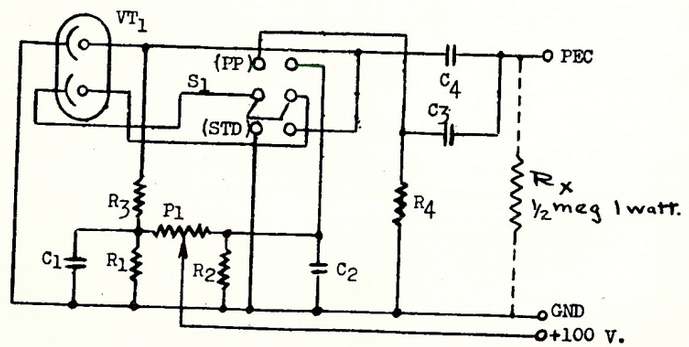

SCHEMATIC

FIGURE 3

(AM-101 Volume Control Amplifier Resistor Change)

1. AM-101 VOLUME CONTROL AMPLIFIER RESISTOR CHANGE.

The following resistors are supplied with each SH-106 Push-Pull Kit:-

1 SN-523 Resistor (55,000 ohms)
1 SN-1054 Resistor (60,000 ohms)

These resistors should replace R_9 and R_{10} respectively in each AM-101 Volume Control Amplifier (See figure below) in systems having SH-1000 or SH-1001 Sound Mechanisms equipped with the SH-106 Push-Pull Kit.

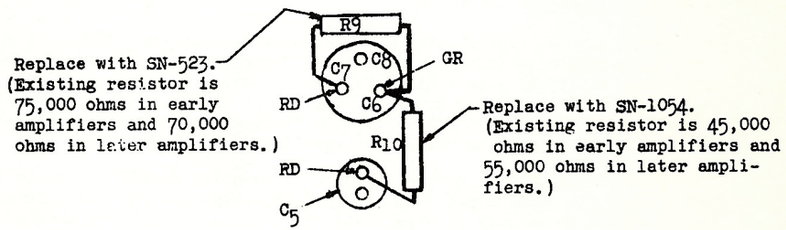

The resistors are installed in the voltage divider circuit of the AM-101. They increase the voltage applied to the potentiometer in the SH-2021 Push-Pull Balancing Unit Assembly, and thereby insure adequate adjustment range of the potentiometer as described in the Equipment Instruction "SH-106 Push-Pull Kit".

2. SPECIAL NOTES ON ADJUSTMENT OF SH-106 PUSH-PULL KIT.

A. Level.

(1) It is possible that there may be considerable variation in output level of individual push-pull cells SN-331 (RCA #920) and also of standard cells SN-724 (RCA #868). Accordingly the photo-electric cells should be interchanged between machines, and also replaced to determine whether or not this is the cause of the variation.

(2) As another check, the push-pull cells should be replaced with standard SN-724 (RCA #868) Cells; again to determine whether the variation is due to the cell proper or to some other part of the circuit. The photo-electric cell wiring is such that the standard cells may be used without change in electrical connections. It is only necessary to throw the switch to "Standard" position.

(3) There is a difference in the input resistance and capacitance, resulting in a change in the coupling impedance, which reduces the response approximately 2 db at 8,000 cycles in reproduction of both standard and push-pull where the push-pull kit is installed, as compared with the sound head without push-pull.

In tuning the system to the recommended Academy characteristic (equivalent to Lz, p) special attention should be given to the adjustment of the AM-1001 Amplifier warping circuit elements in order to obtain the proper electrical characteristic equivalent to the recommended Academy curve. With the facilities in the warping circuit, combinations of elements should be obtained easily even though they are not exactly as shown on drawing SC-21, associated with the Tuning-Up Instructions for the particular system. In all cases the electrical characteristic, as measured with multi-frequency film and a volume indicator, should be the final determination. Do not merely set the connections as shown in the block schematics on drawing SC-21 and expect the electrical characteristic to come out exactly as shown on the curve - as for critical adjustments, it is important to explore the characteristic by actual measurement.

B. Cancellation or Balance.

(1) To insure maximum cancellation or balance it is very important that the optical system be adjusted carefully per Equipment Instruction "SH-106 Push-Pull Kit", and also that the electrical circuit be properly adjusted by means of the balancing potentiometer in the SH-2021 Push-Pull Balancing Unit Assembly. The equipment instruction describes a method of performing this by using standard single track frequency film.

(2) The cancellation factor can be improved by twisting SH-2021 wires to the photo-electric cell socket - that is, the black-yellow and the red-yellow wires should be twisted as a pair and the red and black wires should be twisted as another separate pair.

C. Optical Adjustments.

(1) One of the most important and obvious reasons for loss of high frequencies is maladjustment of the lens assembly. While it is reasonable to assume that the lens tube focus has been checked using 8,000 cycle film in the regular manner (refer to Section 1 of the Tuning-Up Instructions for the particular system) this adjustment should be verified.

(2) As mentioned under Section "B" above, it is most important that the reflector assembly with the cylindrical lenses be precisely located. Too much emphasis cannot be placed upon the importance of making these adjustments. By merely saying that it must be done "precisely" does not mean that it requires only a little more than ordinary care. It is a very precise adjustment and requires considerable time until an individual is thoroughly acquainted with the method and procedure.

In this connection the point mentioned in the equipment instruction with regard to accurate lateral positioning of the exciter lamp should be emphasized. This is best done with the standard Academy 17-Track Test Film. The buzz track is not adequate for this adjustment.

The method outlined in the equipment instruction for obtaining optical balance with the exciter lamp operating on AC must be very carefully followed. It may be necessary to find an optimum setting between the balancing potentiometer and the position of the exciter lamp, this setting being arrived at by a simultaneous adjustment of both elements. In doing this, however, care should be taken that an incorrect position of the exciter lamp laterally is not compensated for in the adjustment of the balancing potentiometer.

1. DESCRIPTION.

A. Use. Couples the SH-1000 or SH-1001 Sound mechanism output to a TA-7387 Amplifier or 500 Type Amplifier Set when the sound mechanism replaces a Western Electric 209 or 211 Reproducer Set. It consists of a metal cabinet with a screw-cover, in which are installed, in the field, the PEC filter mesh, coupling transformer and terminal strip removed from the replaced Western Electric Reproducer Set.

B. Mounting. On the sound mechanism by means of details supplied.

C. Size. 6¼" H x 6¼" W x 9" D. D. Weight. 10 lbs.

2. INSTALLATION.

A. The PEC filter mesh, coupling transformer and terminal strip should be removed from the replaced W.E. Reproducer Set, installed in the cabinet per the associated drawing SH-2066 and the wires connected to the same terminal strip terminals. Mount the assembly on the sound mechanism per SH-2066.

B. Resistor R_3 Change. The SN-521 Resistor (75,000) ohms), packed in the cabinet, should be substituted for the Resistor R_3 (100,000 ohms) in the filter mesh circuit to provide the proper polarizing potential. Refer to circuit label on 209 or 211 Reproducer Set and drawing SH-2066.

C. Wiring Changes when SH-1000 or SH-1001 is equipped for Push-Pull Film Reproduction.
In addition to the resistor change described in section 2-B, the following wiring changes are required in the coupling unit to provide for equalization of push-pull outputs.(see Figure)

(1) At C_1 disconnect blue transformer lead from junction of R_1 and R_3, and reconnect to black terminal of C_1 (other side of R_3).

(2) Disconnect the green transformer lead from PEC terminal on the transformer mounting bracket, and tape. Remove the tape from the blue-white transformer lead and connect it to this terminal.

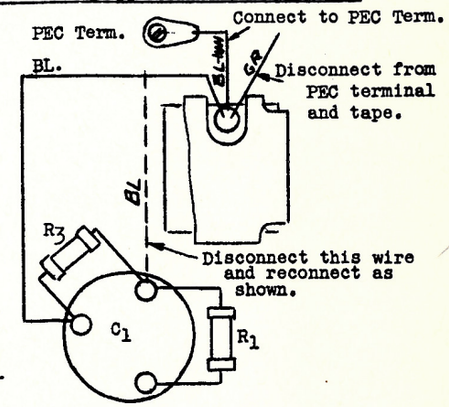

D. External Connections. Terminal Strip connections in the SH-1000 or Sh-1001 and SH-2066 should be made per drawing WD-161 associated with the Installation Instructions.

3. ASSOCIATED DRAWING. SH-2066 Coupling Unit Assembly.

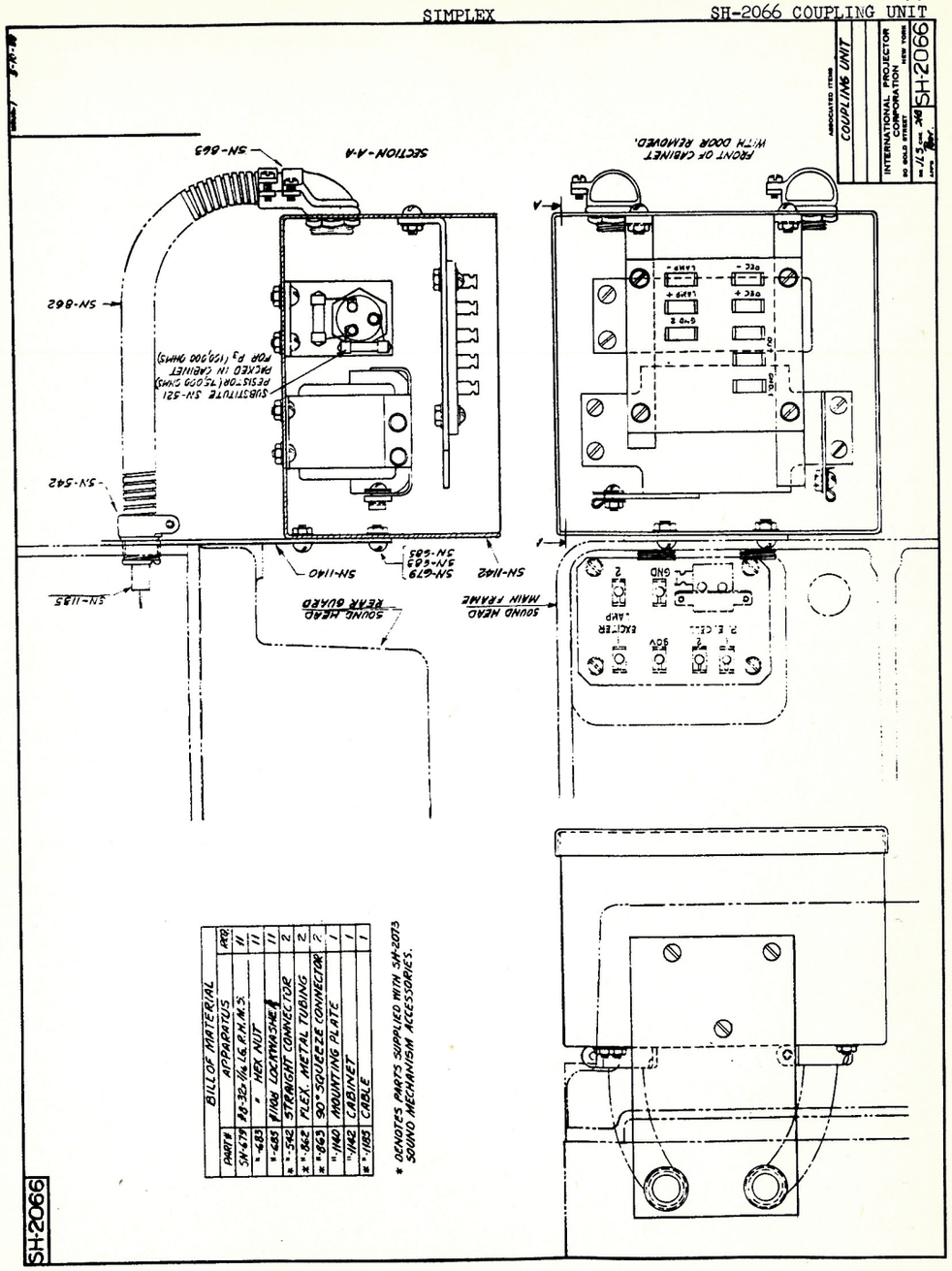

BILL OF MATERIAL		
PART#	APPARATUS	REQ.
SN-679	#8-32 x 1/16 LG. R.H.M.S.	11
" -683	" HEX NUT	11
" -685	#1100 LOCKWASHER	11
* " -542	STRAIGHT CONNECTOR	2
* " -862	FLEX. METAL TUBING	2
* " -863	90° SQUEEZE CONNECTOR	2
" -1140	MOUNTING PLATE	1
" -1142	CABINET	1
* " -1185	CABLE	1

* DENOTES PARTS SUPPLIED WITH SH-2073 SOUND MECHANISM ACCESSORIES.

1. DESCRIPTION.

Two types of Simplex Take-Ups known as "Old Style" and "New Style", have been furnished. The differences are shown in the figures below. When used with the SH±1000 Sound Mechanism, a change should be made in the take-up to take care of a slight misalignment between the drive pulley on the sound mechanism and the driven pulley on the take-up. The parts required, one SN-481 and one SN-482 Spacer, are shipped with the sound mechanism accessories.

2. OLD STYLE TAKE-UPS.

Both spacers are required, located as shown in Figure 1. Disassemble the take-up and drill a new hole the same size as the present oil hole, 7/16" to the right of the tapped hole. Install the two spacers and reassemble. The new hole becomes the oil hole, and the set screw engages the former oil hole in the bushing.

3. NEW STYLE TAKE-UPS.

Only the SN-482 Spacer is required, located as shown in Figure 2. Disassemble the take-up, install the spacer and reassemble.

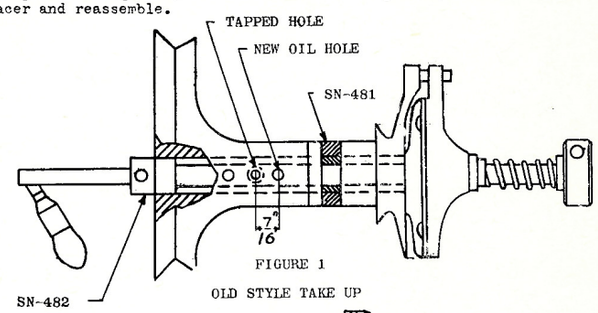

FIGURE 1
OLD STYLE TAKE UP

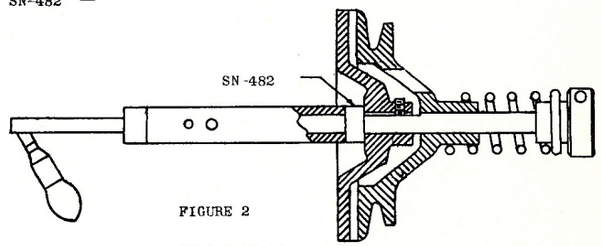

FIGURE 2
NEW STYLE TAKE-UP

4. OPERATION.

The take-up should be adjusted so that smooth operation is obtained throughout the running of the entire reel. At the beginning of the reel there should be no slack film, and at the end of the reel tension on the film should not be excessive.

In some instances, even after careful adjustment, difficulty may be experienced in obtaining constant smooth operation. This is usually due to the pulley and collar not rotating freely on the shaft, or the shaft not rotating freely in its bushing. It may be caused by dirt or too little clearance between the running surfaces. In such cases, disassemble the take-up, clean all parts carefully, check for clearance and, if the parts do not rotate freely, carefully ream out the collar, pulley or shaft bushing, as required. Enlarge the holes only enough to ensure free rotation of the parts. The friction discs should operate smoothly with or without lubrication - smooth operation is not aided by lubrication of the discs. An oil hole is provided for lubrication of the shaft. For this purpose Simplex Oil, applied sparingly, should be used.

Printed in U. S. A.
Issue #1
June 18, 1941

1. EQUIPMENT

1.1 The equipment required in the sound mechanism modernization of systems using Western Electric Reproducer Sets depends upon the type of equipment installed. The tabulation lists the types of Western Electric equipment and the Simplex Modernization Kit to be ordered.

SIMPLEX MODERNIZATION KIT PER PROJECTOR			WESTERN ELECTRIC EQUIPMENT INSTALLED			
60 CYCLE	50 CYCLE	DC	REPRODUCER SET	PRE-AMPLIFIER	FADER	POWER AMPL.
SH-10	SH-13	SH-16	D-Spec. 1-A Base *206; 208	D-85943; D-86729 49 49 or 62	(398 (702 (705	(46; 41-42; (41-42-43
SH-11	SH-14	SH-17	206; 208	49 or 62	713 TA-7305	46, 41-42; 41-42-43; 86; 86-87; D-95036
SH-12	SH-15	SH-18	206; 208 209; 211 209; 211	TA-7387 TA-7387 -	753 753 753	86; 86-87 86; 86-87; 91.

* Special combination found only in systems that have been modernized.

In addition to the above, the type of exciter lamp supply determines the exciter lamp required (2 amperes or 4 amperes) which should be determined from the following:

ORDER	EXCITER LAMP SUPPLY
SN-297 Exciter Lamp (4 Amperes)	Storage Batteries (12 Volt) KS-5259 Motor Generator Set TA-4035 Power Unit 5-A Current Supply Set
SN-312 Exciter Lamp (2 Amperes)	TA-7276 Power Unit KS-7146 Current Supply Set 12 Type Rectifier

SH-106 Push-Pull Kits may be installed in SH-1000 or SH-1001 Sound Mechanism initially or at any future date as an extra. Mechanisms so equipped will reproduce either push-pull or single track film recordings, an important feature in the sale of sound mechanism modernizations.

Example:- If the power supply is 105 - 125 volts, AC, 60 cycles ± 3%, and the equipment installed consists of:

2 #1-A Bases
2 #49 Amplifiers
1 #702 Type Control Cabinet
1 #41 and #42 Type Amplifier
1 KS-5259 Motor Generator Set

Order: 2 SH-10 Modernization Kits with SN-297 Exciter Lamps

If push-pull equipment is also specified add to the above order:

2 SH-106 Push-Pull Kits.

2. INSTALLATION OF EQUIPMENT

2.1 These instructions cover the replacement of Western Electric Reproducer Sets by Simplex Sound Mechanisms. The associated drawing shows the typical conduit arrangement and wiring diagram for the modernization equipment furnished for the types of Western Electric equipment tabulated below.

FIGURE ON WD-161	WESTERN ELECTRIC EQUIPMENT INSTALLED			
	REPRODUCER SET	PRE-AMPLIFIER	FADER	POWER AMPLIFIER
1, 1-A	D-Spec.	D-85943; D-86729	(398	(46; 41-42;
	1-A Base	49	(702	
			(705	(41-42-43
	*206; 208	49 or 62		

*This combination is special and will be found only in systems that have been modernized.

Issued by
Engineering Department
Printed in U. S. A.

October 25, 1945
Issue #1

FIGURE ON WD-161	WESTERN ELECTRIC EQUIPMENT INSTALLED			
	REPRODUCER SET	PRE-AMPLIFIER	FADER	POWER AMPLIFIER
2, 2-A	206; 208	49 or 62	713 TA-7305	46, 41-42; 41-42-43; 86; 86-87; D-95036
3, 3-A	206; 208	TA-7387	753	86; 86-87;
	209; 211	TA-7387	753	86; 86-87;
	209; 211	-	753	91

The preferred location of the equipment is shown on the associated drawing, and insofar as Projection Room front wall conditions permit this arrangement should be maintained.

A. Mounting. All equipment, outlet boxes and condulets should be fastened to brick or concrete walls with bolts and expansion shields; to tile walls with toggle bolts; and to gypsum block or transite walls with through bolts.

B. Conduit. The rigid conduit used should not be smaller than specified on the associated conduit layout, but larger conduits may be used if installed or if required to conform to local ordinances.

NOTE: "BX" or flexible conduit (Greenfield) may be used instead of rigid conduit for all runs if local, city and state regulations permit.

C. SH-2100 Coaxial Cable. Special care should be taken in the handling and installation of the coaxial cable, coupling the sound mechanism output to the AM-145 Pre-Amplifier input, as sharp bends or kinks may damage it and make replacement necessary. A fixed length of coaxial cable is shipped completely assembled with a flexible conduit connector at each end. The connector clamping screws may be loosened for installation, but DO NOT DISSEMBLE THE CABLE OR SHORTEN IT.

D. Wiring. The wires should be of the sizes specified on the above drawing, except that larger wires already installed may be used.

The color for wiring should be as follows:-

White Conductor - Negative, common or ground.
Black Conductor - Positive

All connections should be soldered with rosin core solder. No flux of any kind should be used.

3. INSTALLATION MATERIAL SUPPLIED BY THE CUSTOMER

3.1 Before ordering the installation material the associated conduit layout drawing should be carefully studied, the location of the equipment determined, and the conduit runs planned. Existing conduit and wiring should be used if suitable.

3.2 The number of feet of conduit, and the length of wire required, will depend upon the size of the Projection Room and the location of the equipment. The number of condulets required will depend upon the number of bends in the various conduit runs. Condulets are recommended so that wires may be more readily pulled through the conduit.

4. POWER REQUIRED.

4.1 The main power feeders to the Projection Room should be of adequate size to obtain good regulation, and the voltage and frequency should be within the limits given below during operating hours. High quality sound reproduction and equipment life are dependent upon these factors.

4.2 The power supply in the Projection Room should be 105 - 125 volts AC., 50 or 60 cycles plus or minus 3%. The main power feeders to the Projection Room should be of sufficient size to carry the regular load of the projector arcs, other projection room equipment, the sound system amplifiers, rectifiers, etc., and in addition a load of 30 amperes for the sound mechanisms (25 amperes starting, 3.2 amperes running current).

4.3 The existing conduit and wiring to the projector motors may be used wherever suitable. It is recommended that each motor be separately fused, preferably with a 5 ampere fusetron. If fusetrons are not available, a 20 ampere fuse may be used temporarily.

4.4 If the power supply is other than that given above, special equipment is required.

ASSOCIATED DRAWING - WD-161 - Conduit Layout and Wiring Diagram

ALTEC SERVICE CORPORATION

SIMPLEX MODERNIZATION,

SOUND EQUIPMENT BULLETIN

REPLACEMENTS OF W.E. SOUNDHEADS

WD-161

ISSUE: 1 6-30-39

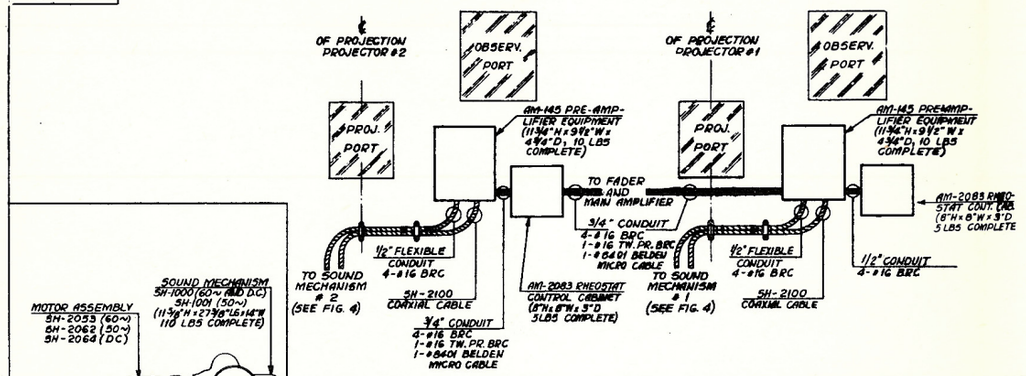

FIG. 1 CONDUIT LAYOUT FOR REPLACEMENT OF W.E. D-SPEC. ATTACHMENTS & 1-A BASES

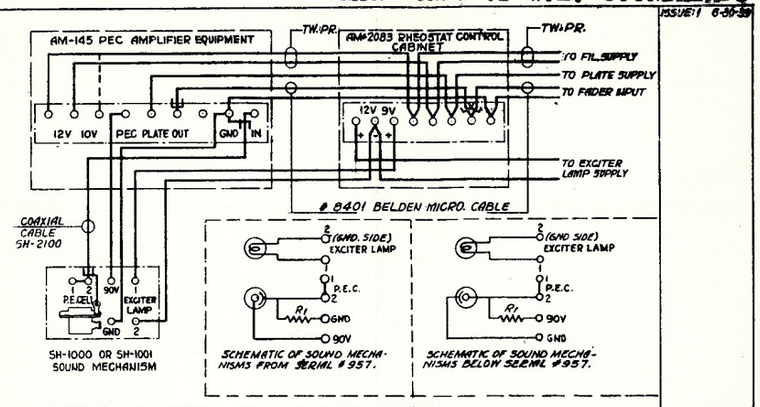

FIG. 1-A WIRING DIAGRAM

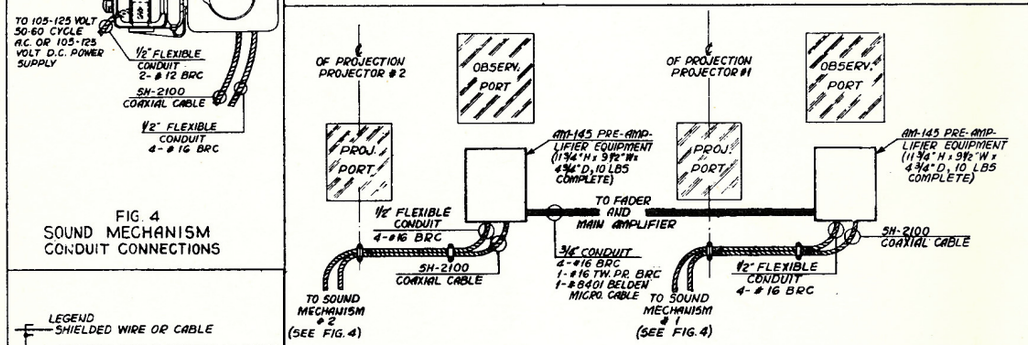

FIG. 2 CONDUIT LAYOUT FOR REPLACEMENT OF W.E. 206 AND 208 REPRODUCER SETS

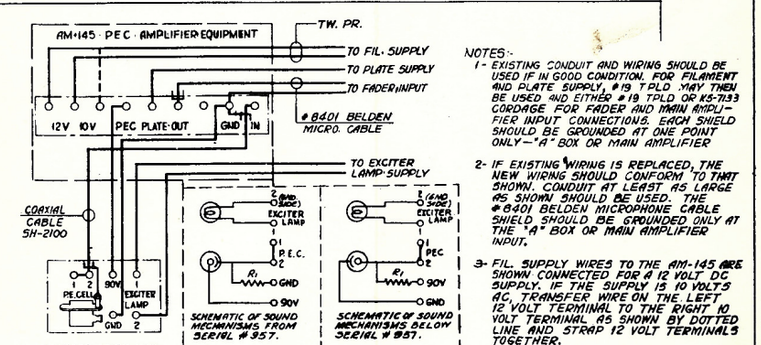

FIG. 2-A WIRING DIAGRAM

NOTES:-

1- EXISTING CONDUIT AND WIRING SHOULD BE USED IF IN GOOD CONDITION. FOR FILAMENT AND PLATE SUPPLY, #19 TPLD MAY THEN BE USED AND EITHER #19 TPLD OR K5-7133 CORDAGE FOR FADER AND MAIN AMPLIFIER INPUT CONNECTIONS. EACH SHIELD SHOULD BE GROUNDED AT ONE POINT ONLY—"A" BOX OR MAIN AMPLIFIER

2- IF EXISTING WIRING IS REPLACED, THE NEW WIRING SHOULD CONFORM TO THAT SHOWN. CONDUIT AT LEAST AS LARGE AS SHOWN SHOULD BE USED. THE #8401 BELDEN MICROPHONE CABLE SHIELD SHOULD BE GROUNDED ONLY AT THE "A" BOX OR MAIN AMPLIFIER INPUT.

3- FIL. SUPPLY WIRES TO THE AM-145 ARE SHOWN CONNECTED FOR A 12 VOLT DC SUPPLY. IF THE SUPPLY IS 10 VOLTS AC, TRANSFER WIRE ON THE LEFT 12 VOLT TERMINAL TO THE RIGHT 10 VOLT TERMINAL AS SHOWN BY DOTTED LINE AND STRAP 12 VOLT TERMINALS TOGETHER.

4- WIRES NOT OTHERWISE DESIGNATED, ARE #16 BRC.

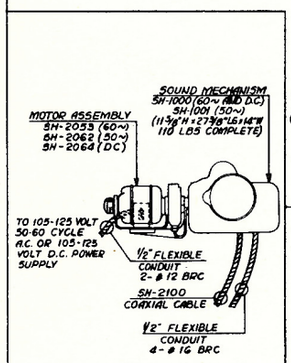

FIG. 4
SOUND MECHANISM
CONDUIT CONNECTIONS

LEGEND
SHIELDED WIRE OR CABLE

CONNECT SHIELD EXACTLY AS SHOWN TO AVOID LOOP GROUND AND NOISE

COAXIAL CABLE-SHIELD IS GROUNDED ONLY IN AM-145 PRE-AMPLIFIER EQUIPMENT

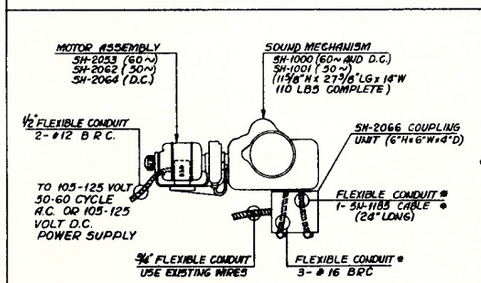

* TWO FLEXIBLE CONDUITS, 4 CONNECTORS & 1 SH-1185 CABLE ARE PACKED IN SH-2073 SOUND MECHANISM ACCESSORIES

FIG. 3 CONDUIT LAYOUT FOR REPLACEMENT OF W.E. 209 AND 211 REPRODUCER SETS

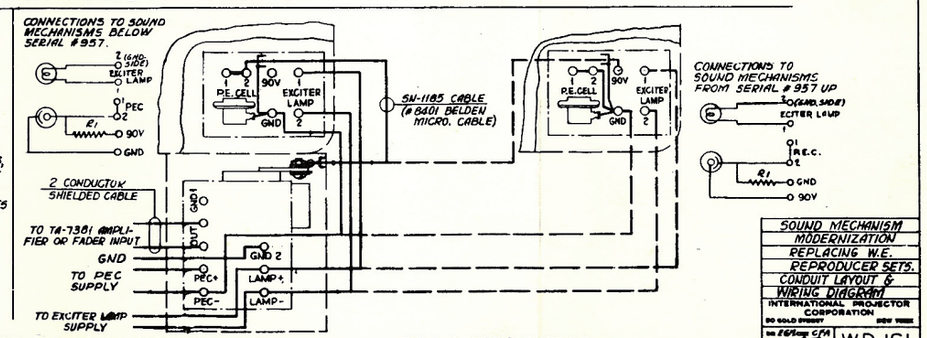

FIG. 3-A WIRING DIAGRAM

SOUND MECHANISM MODERNIZATION REPLACING W.E. REPRODUCER SETS. CONDUIT LAYOUT & WIRING DIAGRAM

INTERNATIONAL PROJECTOR CORPORATION

WD-161

Issued by Engineering Department
Printed in U.S.A.

1. DESCRIPTION.

The AM-2069 consists of a three-position selector switch and knob, two single circuit jacks and four resistors on a mounting plate. A cable form is provided for external connections. When mounted in an AM-101 Volume Control Amplifier it selects any one of three inputs: film in middle position, microphone in left position (500,000 ohms) and phonograph in right position (500 ohms).

2. INSTALLATION.

The AM-2069 should be installed in one of the AM-101 Volume Control Amplifiers in place of the nameplate on the cover, per the sketch at the right, using the present mounting screws, nuts and washers. Change R_1 or R_3, if required, to match phonograph or microphone impedance.

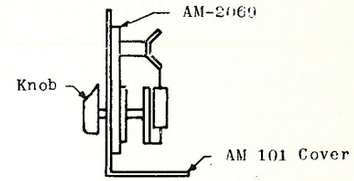

The AM-101, in which the AM-2069 is installed, should be modified and AM-2069 connections made to it as shown in the sketch at the right. Note that R_1 and the existing VT_1 grid lead are removed. The new grid lead is the green wire in the AM-2069 cable form, and should be routed to VT_1 between the cover and the chassis.

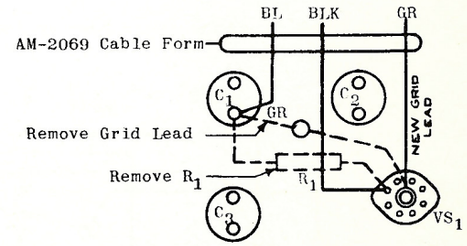

The special inputs may be plugged into the jacks provided, or for a permanent installation these inputs may be connected to terminals 1 & 6 (Microphone) and 1 & 7 (Phonograph) as shown. Flexible shielded cable should be used and installed so that it does not interfere with the opening and closing of the cabinet door.

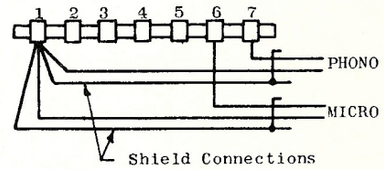

3. OPERATION

A. **Film Reproduction.** Set the selector switch in "Film" position. System operation is normal and the special inputs are disconnected.

B. **Microphone or Phonograph Reproduction.** Set the selector switch in left or right position respectively. Also set the changeover switch in the same cabinet so that the associated AM 1000 Volume Control Amplifier is operative (pilot lamp lighted). If plug connections are used, be sure the plug is in the jack. With the switch in either left or right position, the associated sound mechanism is inoperative.

4. ASSOCIATED DRAWING.

Wd-154 Schematic and Wiring Diagram.

AM-2069 N.S. - ANN.
SWITCHING ATTACHMENT

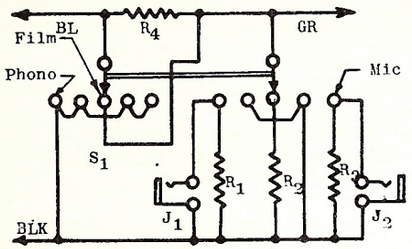

SCHEMATIC

DESIG.		ITEM
J_1-2	SN-610	Jack
R_1	SN-1030	Resistor 500 ohms 1 Watt
R_2)		
R_3)	SN-539	Resistor 500,000 ohms
R_4)		1 Watt
S_1	SN-1063	Switch
TS_1	SN-571	Terminal Strip

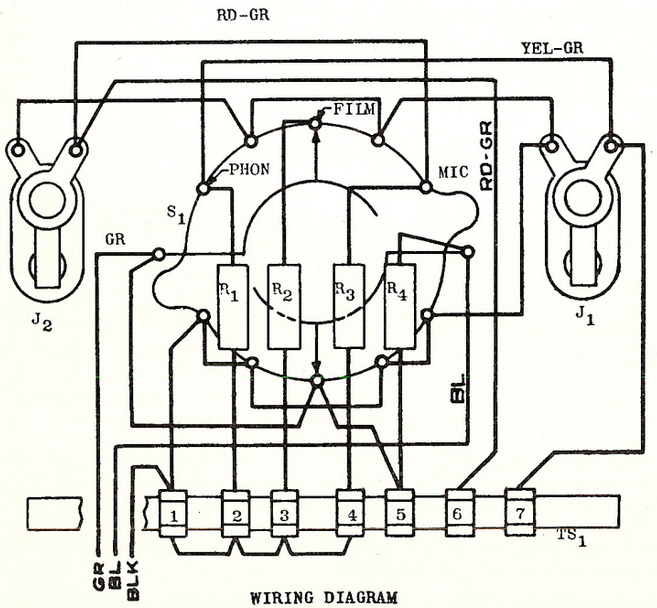

WIRING DIAGRAM
(WD-154)

1. INSTALLATION

1.1 When AM-2069 N.S.-Ann. Switching Attachment is installed in AM-101 equipped with two AM-1000 Amplifiers, the following wiring changes should be made.

(a) Change the wiring in each AM-1000 per the Equipment Bulletin "AM-2069 N.S.-Ann. Switching Attachment"; i.e., remove R_1 and VT_1 grid lead.

(b) Referring to Figure 1 of Equipment Bulletin "AM-101 Volume Control Amplifier ..... With two AM-1000 Volume Control Amplifiers", Addendum #1, Issue #1, omit the strap from C_1 AM-1000 #1 to C_1 AM-1000 #2.

(c) Connect the AM-2069 to AM-1000 #1 per the instructions.

(d) Connect the AM-2069 green grid lead to VT_1 grid cap in AM-1000 #1, and the green jumper to VT_1 grid cap in AM-1000 #2.

(e) Strap terminals per Figure 2 of Equipment Bulletin "AM-101 Volume Control Amplifier With Two AM-1000 Volume Control Amplifiers".

(f) Make external connections to the terminal strips per the system wiring diagram.

1.2 These wiring changes are necessary to permit operation of the AM-2069 with either of the AM-1000 Volume Control Amplifiers in the cabinet, and differ slightly from the changes shown in Figure 2 of Equipment Bulletin "AM-101 Volume Control Amplifier With Two AM-1000 Volume Control Amplifiers".

INSTALLATION

SECTION 1

A. GENERAL

The NTS-100 System includes one; the NTS-200, two; the NTS-300, three; and the NTS-400, four NTS-1150 Power Amplifiers. The NTS-1150 Amplifier is mechanically and electrically interchangeable with the NTS-1125 Amplifier.

There are three versions of each of these systems, as follows:

NTS-100, 200, 300, 400 No Ramp Control Cabinet
NTS-100, 200, 300, 400 with NTS-81 Control Cabinet
NTS-100, 200, 300, 400 with LU-3016 Control Cabinet

B. SPACE REQUIREMENTS

1. Projection Room

   a. For two projectors only, this room should be at least 14 feet wide (parallel to the screen), 10 feet deep and 8 feet high. Larger Projection Rooms are desirable where space permits.

      NOTE: Additional space is needed for a third projector or if a rewind table, power conversion equipment or other auxiliary equipment is in the Projection Room.

   b. Any local, city or state ordinances governing the size of the Projection Room and the clearance around the projectors supersede the above recommendations.

2. Power Conversion Equipment

   a. The rectifiers or motor generator set, supplying the direct current for the arc lamps, should be located in a separate room whenever possible.

   b. Good ventilation in this room is essential in view of the heavy power rating of this equipment.

C. POWER REQUIREMENTS

1. For the power conversion equipment, the power supply to the Projection Room should be nominal 220 volts AC, 60 cycles, 3-phase. The consumption of typical power conversion equipment is listed in the table below.

2. For the Sound Equipment, the power supply in the Projection Room should be 105-125 volts AC, 60 cycles ±3 percent.

3. Power consumption of power conversion equipment and sound equipment is tabulated below.

Equipment	Power Required Each Unit	Power Factor
NTS-1150 Amplifier	400 Watts	86%
PU-1005 Power Unit	85 Watts	90%
PU-1008 Power Supply	2700 Watts	90%
1 Sound Mechanism Motor Starting	2300 Watts	-
1 Sound Mechanism Motor Running	155 Watts	-
HI-70/140 Arc Generator	7-1/2 HP	-
HT-135/270 Arc Generator	30 HP	-

D. MATERIAL SUPPLIED BY THE CUSTOMER

1. The customer furnishes all electrical conduit and wiring and associated material required for the installation of the sound system.

2. Existing conduit may be used if suitable. Condulets are recommended so that wires may be pulled readily.

3. The estimated underground cable requirements for a typical Drive-In Theatre is given in the following table. This estimate is based on the Speaker Posts being 19 feet apart on ramps that are 40 feet center to center with an included angle of 80 degrees for the ramp area.

Issued by
Engineering Department
Printed in U. S. A.

February 15, 1957
Issue #1

NOTE: In theatres having dome lights and more than eleven ramps, all underground cable is No. 12 single conductor.

UNDERGROUND CABLE REQUIREMENTS

Number of Ramps	Number of Cars (Approx.)	SOUND AND LIGHTS #14-2 Cable Feet	SOUND AND LIGHTS #12-1 Cable Feet	SOUND ONLY #14-2 Cable Feet
5	156	3,000	3,500	3,000
6	208	4,000	4,500	4,000
7	266	5,000	5,000	5,000
8	330	6,000	6,000	6,000
9	400	7,000	7,500	7,000
10	476	8,500	8,500	8,500
11	558	10,000	10,000	10,000
12	646	-	34,500	11,500
13	742	-	39,000	13,000
14	844	-	45,000	15,000
15	952	-	52,000	17,000
16	1,066	-	56,000	19,000
17	1,186	-	63,000	20,500
18	1,312	-	67,500	23,000
19	1,444	-	73,000	26,000
20	1,582	-	78,500	28,500
21	1,726	-	84,000	31,000
22	1,876	-	90,000	34,000
23	2,032	-	95,000	37,000

E. CONDUIT AND WIRING

1. Conduit sizes should be as specified in the associated conduit layout and conduit runs should be as short as possible.

   NOTE: When dome lights are not used, the PU-1008 Power Supply and the associated conduit and wiring are not required.

2. Wire sizes and connections should be in accordance with the associated wiring diagram. Splices should be made only when specified.

3. Sound Circuits to Ramps.

   a. Connect no more than 500 In-A-Car speakers to each Amplifier.

   b. Connect the same number of In-A-Car speakers to each Ramp Control Panel Switch (when installed) insofar as practical. The wiring becomes complicated if one circuit serves a part of more than one ramp.

   c. Plan sound cable runs so that all Ramp Control Switches are used.

   d. Run one sound circuit to each of the shorter ramps and two to each of the longer ramps and continue the sound circuit from post to post along the ramp.

   e. The ramp wiring shown in the associated wiring diagram is for a typical average theatre. Modification may be necessary to meet specific conditions.

      NOTE: While the wiring associated with the PU-1008 Power Supply is not required when dome lights are not used, it is recommended that light cables be laid initially, if the addition of lights is anticipated in the future.

4. Lighting Circuits

   a. Plan cable runs so that the same number of dome lights, insofar as practical, but not more than 126, are connected to each of the three transformers in the PU-1008 Power Supply.

      NOTE: The lighting circuit is of the balanced type, shown schematically in Figure 1. The number of dome lights on each side of the circuit, 63 maximum, must be the same. The wiring becomes complicated if more than one circuit serves any half of a ramp.

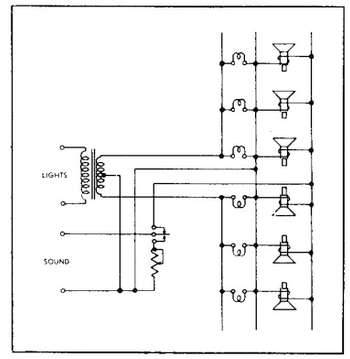

FIGURE 1

b. Cable runs should be as direct as possible to avoid unnecessary line loss.

c. Run one lighting circuit (2 wires) from each transformer in the PU-1008 to the ramps per the associated wiring diagram.

NOTE: While one lighting circuit may serve several of the shorter ramps, the number of ramps served by one circuit decreases as the length of the ramp increases.

d. Continue one of the wires of each lighting circuit from post to post in one half of each of the ramps served by that circuit and the other wire in the same manner in the other half of the same ramps.

NOTE: When connections are properly made, the dome lights are connected between one lighting circuit wire and the sound common, but because of the balanced circuit, no current flows in the sound common.

F. EQUIPMENT MOUNTING

1. Projection Room Equipment

a. All wall mounting equipment, outlet boxes and condulets should be fastened to brick or concrete walls with bolts and expansion shields, to tile walls with toggle bolts and to gypsum block or transite walls with through bolts.

b. Equipment Mounted on Projection Room Front Wall

The changeover switches should be located for convenient changeover at each projector and the AM-141 Volume Control Amplifier so that the system volume control is readily accessible. An AM-2082 Extension Volume Control should be installed so that the volume may be conveniently adjusted at the right projector.

c. Equipment Mounted on the Projection Room Rear or Side Wall

This equipment should be so located that all controls are readily accessible and visible from the operating position at each projector and conduits may be run readily to the ramp cable vault. There should be at least three feet clearance in front for inspection and servicing.

2. In-A-Car Speaker Posts

They should be rigidly mounted. Concrete footing is recommended.

NOTE: Two inch galvanized pipe is recommended for speaker posts. If not available, 1-1/2 inch galvanized pipe may be used, in which case H-3716 Casting Set Screws should be obtained from a National Theatre Supply Branch and substituted for those furnished with the coupling units.

3. Coupling Units and In-A-Car Speakers

a. Slide the P-3546 Coupling Unit Casting over the top of the 2" post with the H-3715 Casting Set Screw facing away from the drive-in screen and tighten the set screw sufficiently to hold the casting in position.

NOTE: If a 1-1/2" post is used, obtain H-3716 Casting Set Screws from a National Theatre Supply Branch and substitute.

b. Slide the G-2542 Terminal Strip Assembly into the grooves in the casting, with the dome light over the 1" hole. Connect the external dome light supply and sound wires.

c. Hang the two In-A-Car Speakers on the coupling Unit, and feed the speaker cords through the holes in the bottom of the casting.

d. Tie a strain relief knot in each speaker cord, leaving sufficient slack so that there will be no strain on the conductor when connections are made to the speaker terminals. Connect the conductors per the associated installation drawings.

e. Slide the P-2815 Dome Retaining Clips into the square holes in the coupling unit casting with the open section upward. Depress the small projection on each clip to obtain the position shown before the dome is installed.

f. Place the P-3545 Coupling Unit Dome on the casting and press the clips inward until they snap and hold the dome firmly in position.

NOTE: To remove the dome, depress the small projection on each spring clip with a screwdriver and slide both clips outward.

OPERATION AND MAINTENANCE

SECTION II

1. Sound Mechanism

a. Daily Lubrication

(1) Projector Drive Gear with Regular, Super-Simplex or E-7 Projector Mechanisms. - Fill oil cup on non-operating side with Simplex Projector Oil.

(2) Gear Box. - Add Simplex Sound Mechanism Oil, as required to maintain oil level at top of oil cup.

b. Monthly Lubrication

(1) Pad Rollers. - Apply one drop of Simplex Projector Oil to the oil hole in each Pad Roller and rotate to distribute the oil.

(2) Lateral Guide Roller

(a) Apply one drop of Simplex Projector Oil to the shaft at each end of the felt roller and rotate the flanges to distribute the oil.

(b) Apply one drop of Simplex Projector Oil to the pivot, at each end of the roller bracket and rotate the bracket to distribute the oil.

(c) Slide the assembly inward and apply one drop of Simplex Projector Oil to the stud. Open and close the assembly to distribute the oil.

(3) Drive Motor. - Give each grease cup about 1/2 turn, but do not force too much grease into the bearings. Refill with Simplex Rear Shutter Grease, as required.

c. Semi-Annual Lubrication

(1) Rotary Stabilizer Drum Shaft. - Remove rotary stabilizer and two ball bearing retainer rings, apply one drop of Simplex Projector Oil to each ball bearing. Reassemble and rotate to distribute the oil.

(2) Lateral Guide Roller. - Apply one drop of Simplex Projector Oil to each ball bearing and rotate to distribute the oil.

(3) Projector Drive Gear with X-L Projector Mechanisms. - Apply one drop of Simplex Projector Oil to each ball bearing.

d. Annual Lubrication. - Every twelve months, drain out all oil in the gear box. Fill slowly on the non-operating side with Simplex Sound Mechanism Oil (1-1/2 oz. required) to the top of the oil cup while the mechanism is idle.

CAUTION: Add oil only when the mechanism is idle. Oil is taken up by running gears, but will drain into the bottom of the gear box when the mechanism is idle and the oil level may be too high. There may be leakage around the bearings.

e. Exciter Lamp, Photoelectric Cell, Reflector Lens and Lens Tube Lenses. - Clean carefully each day with lens tissue. Be sure that all dirt, oil and finger prints are removed.

f. Sprockets. -

1. Examine each sprocket carefully for foreign material, wear, under-cutting and looseness.

2. Clean, tighten or replace per Section III, paragraph A, 5.

g. Film Compartment. - Clean daily with a clean cloth.

h. Photoelectric Cell - Check the spot of light daily.

NOTE: The spot should be approximately 7/16" in diameter and centered on the cathode. Readjust per Section III, paragraph A, 9, if necessary.

i. Lateral Guide Roller Assembly

1. Check adjustment periodically and readjust per Section III, paragraph A, 5 as required.

NOTE: The spring at the rear should hold the assembly in firm contact with the knurled nut. In some instances, it may be pushed inward when the guide roller is closed, after film is threaded, and may not return to normal position due to friction. A few drops of Simplex Projector Oil applied to the stud should avoid this condition. Sprocket hole noise will result and cannot be remedied by adjustment until the tendency to stick is eliminated.

2. Clean the felt roller carefully with carbon tetrachloride each month. Inspect for flat spots and replace per Section III, paragraph A, 5, if necessary, as flat spots cause flutter.

3. Inspect the flanges each month and if scored, replace per Section III, paragraph A, 5, otherwise flutter will develop.

j. Pad Rollers

1. Clean carefully, inspect for scoring, adjust to relieve binding or if required, replace per Section III, paragraph A, 4.

2. Check the pad roller adjustment per Section III, paragraph A, 4.

2. Amplifier Equipment

a. Set each power amplifier and power unit AC switch or the master switch in "ON" position and allow the units to warm up for at least five minutes.

NOTE: The pilot light on each amplifier and PU-1008 Power Supply (when installed) and one of the exciter lamps should be bright.

b. When one NTS-86 Amplifier Cabinet is installed, set the monitor selector switch in position "1" and "2" successively, to test the sound from each amplifier.

NOTE: If amplifier #2 is for standby, it is disconnected when the amplifier selector switch is in position "1-2". Therefore, to test the sound from amplifier #2, set the amplifier selector switch on "2" when the monitor selector switch is on "2".

c. When two NTS-86 Amplifier Cabinets are installed, set the amplifier selector and monitor selector switches as follows to test the sound from each amplifier.

Power Amplifier Combination	NTS-86 Amplifier Cabinet No. 1 Amplifier Selector Switch Position	NTS-86 Amplifier Cabinet No. 1 Monitor Selector Switch Position	NTS-86 Amplifier Cabinet No. 2 Amplifier Selector Switch Position	NTS-86 Amplifier Cabinet No. 2 Monitor Selector Switch Position	Tests Sound From Amplifier
2 Regular	1-2	1	1-2	OFF	#1
1 Standby	1-2	2	1-2	OFF	#2
	2	OFF	1-2	1	#3
3 Regular	1-2	1	1-2	OFF	#1
No Standby	1-2	2	1-2	OFF	#2
	1-2	OFF	1-2	1	#3
3 Regular	1-2	1	1-2	OFF	#1
1 Standby	1-2	2	1-2	OFF	#2
	1-2	OFF	1-2	1	#3
	1-2	OFF	2	2	#4
4 Regular	1-2	1	1-2	OFF	#1
No Standby	1-2	2	1-2	OFF	#2
	1-2	OFF	1-2	1	#3
	1-2	OFF	1-2	2	#4

3. Emergency Procedure

a. Exciter Lamp Out - Replacement of the lamp should restore sound.

b. Inoperative Power Amplifier.

(1) An NTS-86 Amplifier Cabinet, which includes an amplifier selector switch, is provided to house each pair of power amplifiers in those installations requiring two or more power amplifiers.

(2) The three-position amplifier selector switch provides for the transfer of the In-A-Car speaker load from an inoperative amplifier to an operative amplifier.

(3) The normal setting of this switch is position "1-2". The positions for emergency operation for the several amplifier combinations are tabulated below.

Power Amplifier Combinations	NTS-86 Amplifier Cabinet No. 1 Inoperative Amplifier	NTS-86 Amplifier Cabinet No. 1 Switch Position	NTS-86 Amplifier Cabinet No. 2 Inoperative Amplifier	NTS-86 Amplifier Cabinet No. 2 Switch Position
1 Regular 1 Standby	#1	"2"	-	-
2 Regular	#1 #2	"2" "1"	-	-
2 Regular 1 Standby	#1 #2	"2" "1"	Switch should remain in Position "1-2"	
3 Regular	#1 #2	"2" "1"	#3	"2"
3 Regular 1 Standby	#1 #2	"2" "1"	#3	"2"
4 Regular	#1 #2	"2" "1"	#3 #4	"2" "1"

c. Sound Circuits to Ramps defective.

(1) There is a remote possibility that a short circuit may develop in one circuit and affect all others.

(2) Turn the ramp control switches "OFF" progressively. The switch that restores sound is in the defective circuit.

(3) Leave it "OFF" until the trouble is corrected, and turn the other switches "ON".

ADJUSTMENTS AND REPLACEMENTS

SECTION III

A. SOUND MECHANISM

1. Mounting on Projector Mechanism.

a. The sound mechanism components (main frame with rear guard attached, motor assembly and damping wheel) are shipped separately.

b. Soundhead Support.

(1) Remove all existing equipment from the projector pedestals, or in new installations position the pedestals properly with respect to the projection port.

NOTE: There should not be less than 6" clearance between the front of the sound mechanism and the front wall.

(2) Mount the soundhead support (selected from the following table) on each Simplex pedestal.

PEDESTAL	SOUNDHEAD SUPPORT
Type L	SN-483
Type LL-4, LL-5 or LL-6	S-1183-L

NOTE: National Theatre Supply Branches have information regarding the soundhead supports required for other pedestals.

3. Main Frame

(1) Insert two H-2647 Soundhead Support Fastening Screws, with two P-2792 Washers, in the upper holes in the main frame.

(2) Position the main frame on the soundhead support with the two screws in the slotted holes in the soundhead support.

(3) Insert two similar screws, with washers, in the two lower holes in the soundhead support and tighten all screws securely.

d. Motor Assembly

(1) Remove the motor cover as follows:

(a) Disengage the front and loosen the rear motor cover fastening wing screws.

(b) Slide the motor cover forward and upward and remove.

(2) Remove the four motor fastening bolts, nuts and washers, the two motor switch bracket fastening screws and the motor, including the switch, from the bracket.

(3) Mount the motor bracket on the front of the main frame with four H-2646 Bracket fastening bolts.

(4) Slide the flywheel on the motor shaft with its keyway in line with the key on the motor shaft (remove tape from key) and fasten with the two P-2788 Flywheel Locking Nuts.

(5) Position the motor on the bracket with its shaft in alignment with the flexible coupling on the gear box drive shaft and slide the shaft into the coupling.

NOTE: Slotted holes are provided in the motor cradle for lateral alignment and clearance holes in the motor bracket for vertical alignment.

(6) Secure the motor with the motor fastening bolts and tighten the motor coupling set screws.

(7) Mount the motor switch and bracket.

Issued by
Engineering Department
Printed in U. S. A.

February 15, 1957
Issue #1

(8) Turn the motor over by hand and, if necessary, readjust the motor bracket vertically and the motor laterally to obtain exact alignment.

(9) Be sure that all bolts and set screws are tightened when alignment is obtained.

(10) Install the motor cover making sure that the lips on the bottom, at the rear of the cover, are under the cover clamping bar. Align the cover with the main frame and tighten the rear and front wing screws.

e. Lower Magazine

(1) Bolt the lower magazine to the bottom of the sound mechanism, fastening the P-2938 Cable Clamp Bracket by means of one of the magazine fastening screws.

NOTE: After connections to the sound mechanism have been made, fasten the flexible cable to the bracket with a suitable cable clamp, so that it does not interfere with the takeup drive belt.

f. Takeup Belt.

(1) Adjust the length as required and close with the belt hook supplied.

(2) Slide over the pulleys on the takeup and on the sound mechanism.

g. Rotary Stabilizer

CAUTION - The G-2002 Rotary Stabilizer is shipped separately and should be unpacked, handled and installed carefully to prevent damage. It is suggested that it be installed only after the installation of the projection equipment has been completed and the flexible conduit and wiring connected to the sound mechanism.

The installation procedure given below should be followed carefully in order to insure proper installation and operation of the rotary stabilizer, especially with regard to end play. Too much end play will cause weaving of the scanning drum and result in sprocket hole and frame line noise.

(1) Remove the Rear Guard.

(2) Remove the P-2305 Screw and H-3202 Nut from the drum shaft on the non-operating side of the sound mechanism and discard the nut.

NOTE: The two loose spring washers on the shaft should not be removed.

(3) Unpack the rotary stabilizer carefully and make sure that all foreign material is removed from the mounting hole.

(4) Slide the rotary stabilizer carefully on the shaft, and line up the mounting holes in the shaft and rotary stabilizer flange.

NOTE: Be sure to hold the scanner drum against its shoulder on the operating side of the mechanism.

(5) Insert the screw, removed under paragraph g, (2), above, in the counterbored hole in the flange and tighten securely.

(6) Check the assembly for end-play by sliding the rotary stabilizer and drum shaft toward the operating side as far as it will go and releasing it. If the drum shaft does not return and seat firmly against its shoulder, there is too much end play.

NOTE: The spring washers should hold the scanner drum firmly against its shoulder, that is, the spring washers should be under compression at all times.

(7) Remove the rotary stabilizer, reverse one of the spring washers and replace the stabilizer. This will increase the effectiveness of the washers and should give the proper end play.

h. Rear Guard

Position on the non-operating side of the main frame and tighten the thumb screws securely.

2. Mounting the Projector Mechanism

a. Remove the two H-2619 Mechanism Bar Fastening Screws, P-2331 Washers and the P-2396 Mechanism Bar from the top of the sound mechanism.

b. Fasten the mechanism bar to the projector mechanism with the two H-1511 Mechanism Fastening Screws. The "F" on the bar should be at the front.

NOTE: When Regular, Super Simplex or E-7 Projector Mechanisms are installed, an SH-2106 Oil Drainage Kit is required. An oil shield is not required with Simplex X-L Projectors.

c. Mount the projector mechanism (and mechanism bar) on the sound mechanism with the two mechanism bar fastening screws finger tight.

d. Loosen the mechanism bar adjustment locking nut and turn the mechanism bar adjusting screw so that there will be no gear interference during installation of the projector drive gear assembly.

e. Install the G-2086 Main Drive and Idler Gear Assembly when the Simplex X-L Projector Mechanism is used, in accordance with the Instruction Manual for this mechanism.

f. The projector drive assemblies, required with other Simplex projector mechanisms are tabulated below.

MECHANISM	DRIVE ASSEMBLY
Regular	SH-1014
Super Simplex	SH-1014
Simplex E-7	SH-1015

NOTE: National Theatre Supply Branches have information regarding projector drive assemblies required when other projector mechanisms are used.

3. Exciter Lamp Bracket

a. Adjustment

(1) For vertical adjustment, loosen the vertical adjustment clamping screw on the left of the bracket and turn the vertical adjusting screw as required.

(2) For lateral adjustment, loosen the lateral adjustment lock nut and turn the screw as required.

NOTE: Tightening the screw moves the bracket outward. Loosening the screw permits the bracket to bs slid forward.

4. Gear Box

a. Gear Box Removal

(1) Loosen the two mechanism bar fastening screws.

(2) Loosen the mechanism bar adjusting screw locking nut and turn the adjusting screw inward so that the sound mechanism drive gear and the idler gear are out of mesh.

(3) Loosen the front and rear motor cover fastening wing screws, slide the motor cover forward and upward and remove.

(4) Loosen the two motor coupling set screws.

(5) Remove the four motor fastening bolts and slide the motor from the motor bracket.

(6) Remove the four gear box mounting screws and the gear box.

(7) Install the replacing gear box and reassemble.

b. Pad Roller Assembly Replacement

(1) Open the pad roller and compress the actuating spring to relieve the spring tension.

(2) Remove the pad roller assembly fastening screw and the pad roller assembly.

(3) Replace parts as necessary, reassemble and adjust the pad roller clearance per the following paragraph.

Issued by
Engineering Department
Printed in U. S. A.
February 15, 1957
Issue #1

c. Pad Roller Replacement

(1) Open the pad roller.

(2) Loosen the pad roller stud set screw in the pad roller arm bracket.

(3) Remove the pad roller stud and pad roller.

(4) Replace parts as necessary and reassemble.

NOTE: Position the pad roller stud so that the pad rollers rotate freely before tightening the set screw.

(5) Adjust the clearance between the pad rollers and sprocket as follows:

(a) Thread two thicknesses of film on the sprocket and close the pad roller.

(b) Loosen the pad roller arm adjusting screw lock nut and position the pad roller arm adjusting screw so that the pad rollers rotate freely.

(c) Tighten the pad roller arm adjusting screw lock nut and check the adjustment.

d. Sprocket Replacement

(1) Open the pad roller

(2) Remove the stripper

(3) Remove the sprocket fastening screw and the sprocket.

(4) Replace parts as necessary and reassemble.

5. Lateral Guide Roller

a. Adjustment

(1) Thread the Academy buzz track film in each projector and sound mechanism. Start the projector and listen for the tones indicative of frame line or sprocket hole noise.

(2) Loosen the locking screw in the center of the knurled adjusting nut, turn the nut as required to eliminate frame line and sprocket hole noise and tighten the locking screw.

NOTE: Clockwise rotation of the knurled nut moves the lateral guide roller inward. Be sure that the spiral spring at the rear, holds the guide roller firmly against the knurled adjusting nut at all times. A drop or two of Simplex Projector Oil on the stud periodically will eliminate any tendency to stick.

b. Lateral Guide Roller Removal

(1) Remove the photo-electric cell shield and the cell.

(2) Remove the two partition plate fastening screws and slide out the partition plate.

(3) Remove the four optical system mounting screws and the optical system.

(4) Loosen the lateral guide roller locking screw, remove the adjusting nut and the lateral guide roller.

NOTE: Be sure that the spiral spring and steel washer remain on the mounting stud.

(5) Install the lateral guide roller, optical system and partition plate.

(6) Adjust the lateral guide roller per Section III, paragraph A, 5,a.

c. Parts Replacements

(1) Remove the lateral guide roller per the previous paragraph.

(2) Remove the cover plate fastening screws and the cover plate.

(3) Remove the ball bearing fastening screw under the cover plate.

NOTE: Use two screw drivers, one to hold the screw at the other end of the shaft.

(4) Slide the felt roller inward and remove the outer bearing, fixed flange, felt roller, adjustable flange, and inner bearing as required.

(5) Replace parts and reassemble.

(6) Adjust the lateral guide roller per Section III, paragraph A, 5,a.

6. Motor

a. Remove the motor cover per Section III, paragraph A, 4,a,(3).

b. Disconnect the wires from the motor.

c. Loosen the motor coupling set screws.

d. Remove the four motor mounting bolts and slide the motor from the bracket. Reinstall the replacing motor, reassemble and reconnect the wires.

NOTE: It is extremely important that the motor shaft be in exact alignment with the coupling. Clearance holes are provided in the motor bracket for vertical adjustment and slotted holes in the motor cradle for lateral adjustment of the motor. These adjustments should be made if necessary.

7. Optical System

a. Adjustment

(1) Thread an Academy 7000 cycle or 9000 cycle test film in each projector and sound mechanism.

(2) Connect a volume indicator across the output of one of the power amplifiers.

(3) Start the projector.

(4) Loosen the lens holder clamping screw and turn the knurled adjusting nut as required until maximum response is read on the volume indicator.

NOTE: The flicker test may be used as an alternative. With the test film threaded as above, place a white card between the film and reflector lens. Turn the motor hand wheel slowly. The film frequency lines will make a definite flicker of light on the card. The optical system is focused when the lines are stationary. If they move downward on the card, the lens tube should be closer to the film, while if they move upward, the optical system should be farther from the film.

(5) Tighten the clamping screw securely when the adjustment is completed.

CAUTION: The azimuth adjustment is made at the factory and should not be disturbed.

b. Optical System Removal

(1) Remove the photo-electric cell shield and photo-electric cell.

(2) Remove the two partition plate fastening screws and the partition plate.

(3) Remove the four optical system mounting screws and the optical system.

(4) Reinstall the replacing optical system and reassemble.

(5) Adjust per the preceding paragraph.

8. Photo-electric Cell

a. Remove the photo-electric cell shield and photo-electric cell and replace.

9. Reflector Lens

a. Adjustment

(1) Loosen the reflector lens clamping screw and rotate the lens carefully until the spot of light is centered on the anode of the photo-electric cell.

Issued by
Engineering Department
Printed in U. S. A.
February 15, 1957
Issue #1

(2) To change the size of the spot of light, move the reflector lens in or out of the bracket as required.

NOTE: The spot of light should be 7/16" in diameter and centered on the anode. If further movement of the reflector lens is required, loosen the two lens holder bracket mounting screws and adjust in the slotted holes as required.

(3) Tighten all screws securely when the adjustment is completed.

b. Replacement

(1) Loosen the reflector lens clamping screw and withdraw the lens.

(2) Install the replacing reflector lens and adjust per the preceding paragraph.

10. Rotary Stabilizer Removal

a. Remove the rear guard.

b. Remove the rotary stabilizer fastening screw and slide the stabilizer carefully from the shaft.
NOTE: The two spring washers should remain on the shaft.

c. Slide the replacing rotary stabilizer on the shaft with the mounting hole in the flange and in the shaft in alignment.

d. Insert the clamping screw in the counterbore in the flange of the stabilizer and tighten.

e. Check the assembly for end play by pushing the scanner drum carefully toward the operating side as far as it will go and release it.

NOTE: The spring washers should hold the scanner drum firmly against its shoulder, that is, the spring washers should be under compression at all times. If the scanner drum does not return and seat firmly against its shoulder, there is too much end play.

f. Remove the rotary stabilizer and reverse one of the spring washers. This will increase the effectiveness of the washers and should give the proper amount of end play.

11. Scanner Drum

a. Remove the rotary stabilizer per Section III, paragraph A, 10 and the spring washers.

b. Remove the reflector lens bracket mounting screws and the bracket.

c. Open the lateral guide roller.

d. On the operating side, slide the scanner drum from its bearings.

e. Install the replacing scanner drum, reassemble and check for end play per the preceding paragraph.

NOTE: It is extremely important that the scanner drum rotate freely and smoothly. If there are any rough spots or lack of freedom of rotation, the assembly should be dismantled and the new scanner drum and ball bearings checked carefully, replacing any parts required.

f. Adjust the reflector lens per Section III, paragraph A, 9.

B. VOLUME CONTROL AMPLIFIER

1. Modification - Connect the 100 mf capacitor, that is shipped with the power amplifier, across the cathode resistor, R3, of the first tube. This change increases the gain of the amplifier nine db.

2. Sound Mechanism Output Balancing - Adjust potentiometer, P2, as required to equalize outputs. P2 varies the potential applied to the photo-electric cells in the two sound mechanisms.

3. Amplifier Removal - Disconnect the cable form wires, from the terminal strip, loosen the amplifier mounting screws and remove the unit.

C. POWER AMPLIFIER

1. Output Transformer (T1) - Strap for 6 ohm output impedance.

2. Power Transformer (T2 and T3) - Set S1 on 125V when the average AC voltage is between 120 and 125 volts. For a power supply between 110 and 120 volts, set S1 on 117 V.

3. Volume Control, R1 - Set in extreme clockwise position (maximum volume). If, however, the normal setting of the main system volume control in the volume control amplifier is well below the midpoint, adjust R1, as necessary, to obtain a normal setting of the main system volume control at approximately midpoint.

4. Bias and Screen Voltage Adjustment - R-26 and R-29 are adjusted before shipment so that the bias is -7.5 to -8.0 volts (pin 1 of V4 to ground) and the screen voltage is 300 (pin 2 of V5 or V6 to ground) with a normal line voltage of 117 volts (S1 on 117V) or 125 volts (S1 on 125V). These voltages should be checked when vacuum tubes (especially V4, V5 or V6) are changed and R-26 and R-29 adjusted as follows, when necessary.

   a. Turn the amplifier off and if the screen voltage is above 300, move the slider of R-29 toward ground. If the screen voltage is below 300 move the slider in the opposite direction.

   b. Turn the amplifier on and adjust R-26 to obtain -7.5 to -8.0 volts from pin 1 at V4 to ground.

   c. Check the voltage from pin 2 of either V5 or V6 to ground.

   d. If this voltage is other than 300, repeat a, b and c until the proper voltage is obtained.

D. RAMP CONTROL CABINETS

1. One or more LU-3016 Ramp Control Cabinets (each containing one or two LU-3018 Ramp Control Panels) or NTS-81 Ramp Control Cabinets may be provided, as desired by the customer and depending upon the size of the theatre.

2. LU-3018 Ramp Control Panel

   a. Divide the ramp load as evenly as possible between the amplifiers by modifying each ramp control panel as required.

   b. Load Resistor Adjustment

      (1) An adjustable resistor is provided for each ramp control switch so that the amplifier load will remain constant regardless of the number of ramps in use.

      (2) Adjust each resistor per the following table.

Speakers Per Circuit	Load Resistor Setting-Ohms
20	100
30	100
40	75
50	60
60	50
70	43
80	38
90	33
100	30
110	27
120	25
130	23

   c. Switch Contact Adjustment

      (1) The switch contact springs should have slight follow on make.

      (2) Adjust the springs carefully, as necessary, to obtain proper contact in both positions.

      (3) Burnish the contacts carefully, if necessary, to remove foreign deposits.

Issued by
Engineering Department
Printed in U. S. A.
February 15, 1957
Issue #1

2. NTS-81 Ramp Control Panel

a. Divide the ramp load as evenly as possible between the amplifier by modifying each ramp control panel, as required.

b. Switch Contact Adjustment.

(1) The switch contact springs should have slight follow on make.

(2) Adjust the springs carefully, as necessary, to obtain proper contact in both positions.

(3) Burnish the contacts carefully, if necessary, to remove foreign deposits.

E. SYSTEM FREQUENCY RESPONSE

1. The frequency response of the system should be adjusted carefully in accordance with the tabulation below to obtain the most pleasing sound reproduction from the In-A-Car speakers.

TYPICAL FREQUENCY RESPONSE

NTS SOUND SYSTEMS

USING MODIFIED AM-141 VOLUME CONTROL AMPLIFIER AND NTS-1125 OR NTS-1150 AMPLIFIER

Curve	EQUALIZATION TERMINAL CONNECTIONS 1 & 2	1 & 3	40	70	130	300	500	1000	2000	3000	5000	7000	8000
a*	Open	.002	-17.4	-15.8	-5.7	+0.8	+1.3	0	-4.2	-8.7	-17	-24.5	-28.5
b	Open	.004	-12.8	-11.8	-2.7	+1.7	+1.8	0	-4.2	-8.7	-17	-24.5	-28.5
c	.27 Meg	.0005 .47 Meg	- 9.4	-10.6	-5	-1.3	-0.7	0	-0.9	-3.6	-11	-18.5	-22.5
d	Open	.006	-10.4	- 9.9	-1.7	+2.0	+2.1	0	-4.2	-8.7	-17	-24.5	-28.5
e	.47 Meg	.0005 .47 Meg	- 8.7	- 9.8	-4.5	-1.2	-0.4	0	-1.4	-4.4	-12	-19.8	-24
f	Open	.0005 .47 Meg	- 6.9	- 8.5	-3.5	-0.6	+0.1	0	-3.1	-6.6	-14.9	-22.5	-26.7
g	.47 Meg	.0002 .47 Meg	- 5.3	- 6	-1.4	+1.7	+1.1	0	-2.9	-6.2	-12.7	-19.5	-23.4
h	Open	.0002 .47 Meg	- 3.9	- 5.4	-0.6	+2	+1.8	0	-3	-6.7	-14	-21.3	-24.7
i	Open	Strapped	- 5.8	- 5.9	-7.5	+2.1	+2	0	-4.2	-8.7	-17	-24.5	-28.5

NOTES

1. The 100 MF Capacitor, shipped as a loose part, should be connected across R-3 in the cathode circuit of first stage of the AM-141 Amplifier. This will provide additional gain of approximately 9 db.
2. AM-141 Volume Control set for 30 db loss.
3. NTS-1125 or NTS-1150 terminated in 6 ohm load.
4. Gain of NTS-1125 or NTS-1150 Amplifier 46.4 db from 5000 ohm input.
5. All measurements made with an Altec ED-35 Test Film. If other Test Films are used, some differences are to be expected.

ASSOCIATED DRAWINGS

			Dwg. No.	
AM-141	Volume Control Amplifier,	Schematic & Wiring Diagram	WD-158	- See Simplex E. B.
LU-3018	Ramp Control Panel,	Wiring Diagram	AS-2190	- See Simplex E. B.
NTS-81	Ramp Control Cabinet,	Schematic	NS-159	- See Page 15
NTS-86	Amplifier Cabinet,	Schematic	NS-207	- See Page 16
NTS-86	Amplifier Cabinet,	Wiring Diagram	NS-208	- See Page 17
NS-1150	Power Amplifier,	Schematic	NS-236	- See Page 18
PU-1008	Power Supply	Schematic & Wiring Diagram	WC-1084	- See Page 19

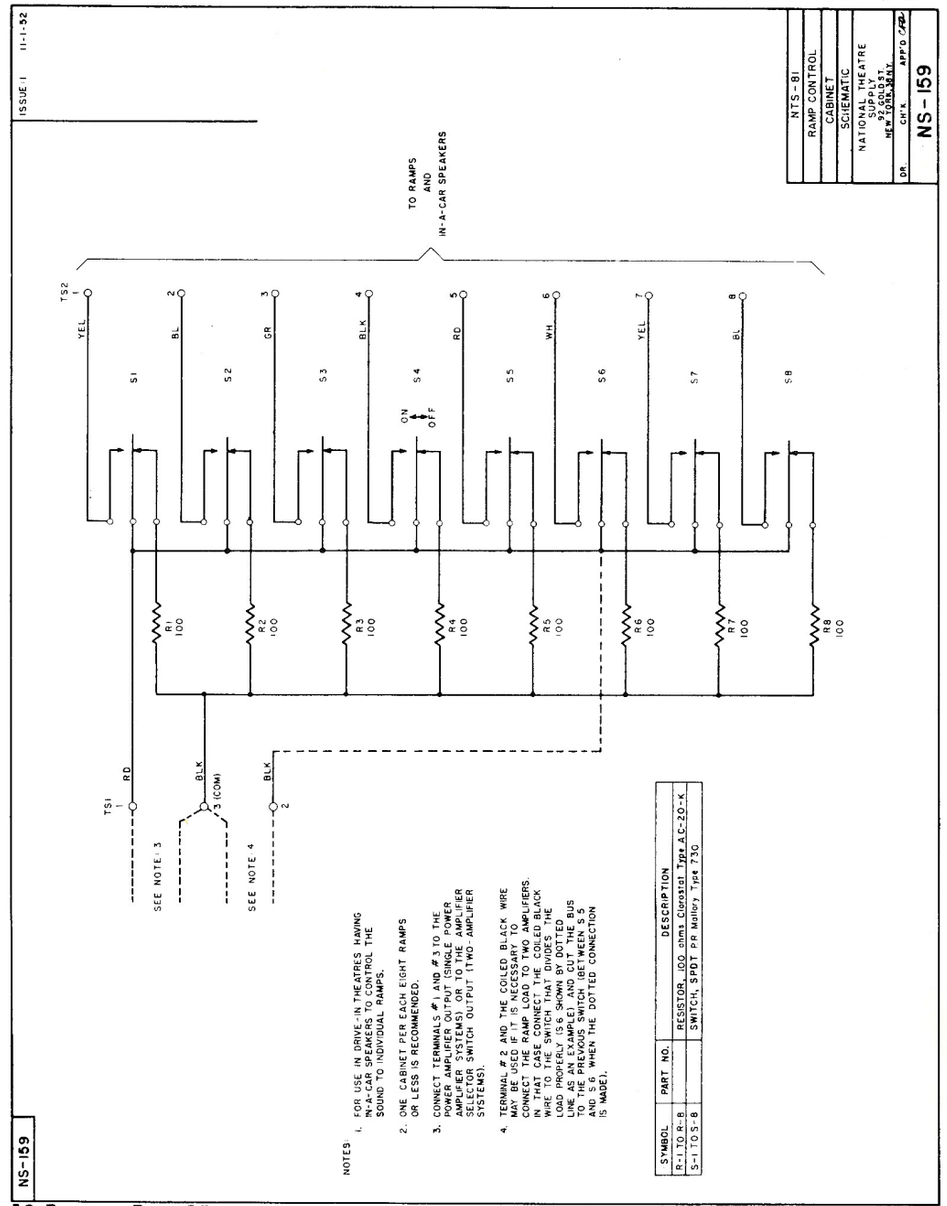
ISSUE 1 11-1-52
NTS-81
RAMP CONTROL
CABINET
SCHEMATIC
NATIONAL THEATRE SUPPLY
92 GOLD ST.
NEW YORK 38, N.Y.
DR.
CH'K.
APP'D
NS-159
TO RAMPS AND IN-A-CAR SPEAKERS
TS2
TS1
YEL
BL
GR
BLK
RD
WH
S1
S2
S3
S4
S5
S6
S7
S8
ON
OFF
R1 100
R2 100
R3 100
R4 100
R5 100
R6 100
R7 100
R8 100
3 (COM)
SEE NOTE 3
SEE NOTE 4
NOTES
1. FOR USE IN DRIVE IN THEATRES HAVING IN-A-CAR SPEAKERS TO CONTROL THE SOUND TO INDIVIDUAL RAMPS.
2. ONE CABINET PER EACH EIGHT RAMPS OR LESS IS RECOMMENDED.
3. CONNECT TERMINALS #1 AND #3 TO THE POWER AMPLIFIER OUTPUT (SINGLE POWER AMPLIFIER SYSTEMS) OR TO THE AMPLIFIER SELECTOR SWITCH OUTPUT (TWO-AMPLIFIER SYSTEMS).
4. TERMINAL #2 AND THE COILED BLACK WIRE MAY BE USED IF IT IS NECESSARY TO CONNECT THE RAMP LOAD TO TWO AMPLIFIERS IN-A-CAR SPEAKERS TO CONTROL THE COILED BLACK WIRE TO THE SWITCH THAT DIVIDES THE LOAD PROPERLY (S6 SHOWN BY DOTTED LINE, AS AN EXAMPLE) AND CUT THE BUS TO THE PREVIOUS SWITCH (BETWEEN S5 AND S6 WHEN THE DOTTED CONNECTION IS MADE).
SYMBOL | PART NO. | DESCRIPTION
R-1 TO R-8 | | RESISTOR, 100 ohms Clarostat Type AC-20-K
S-1 TO S-8 | | SWITCH, SPDT P.R. Mallory, Type 730
NS-159

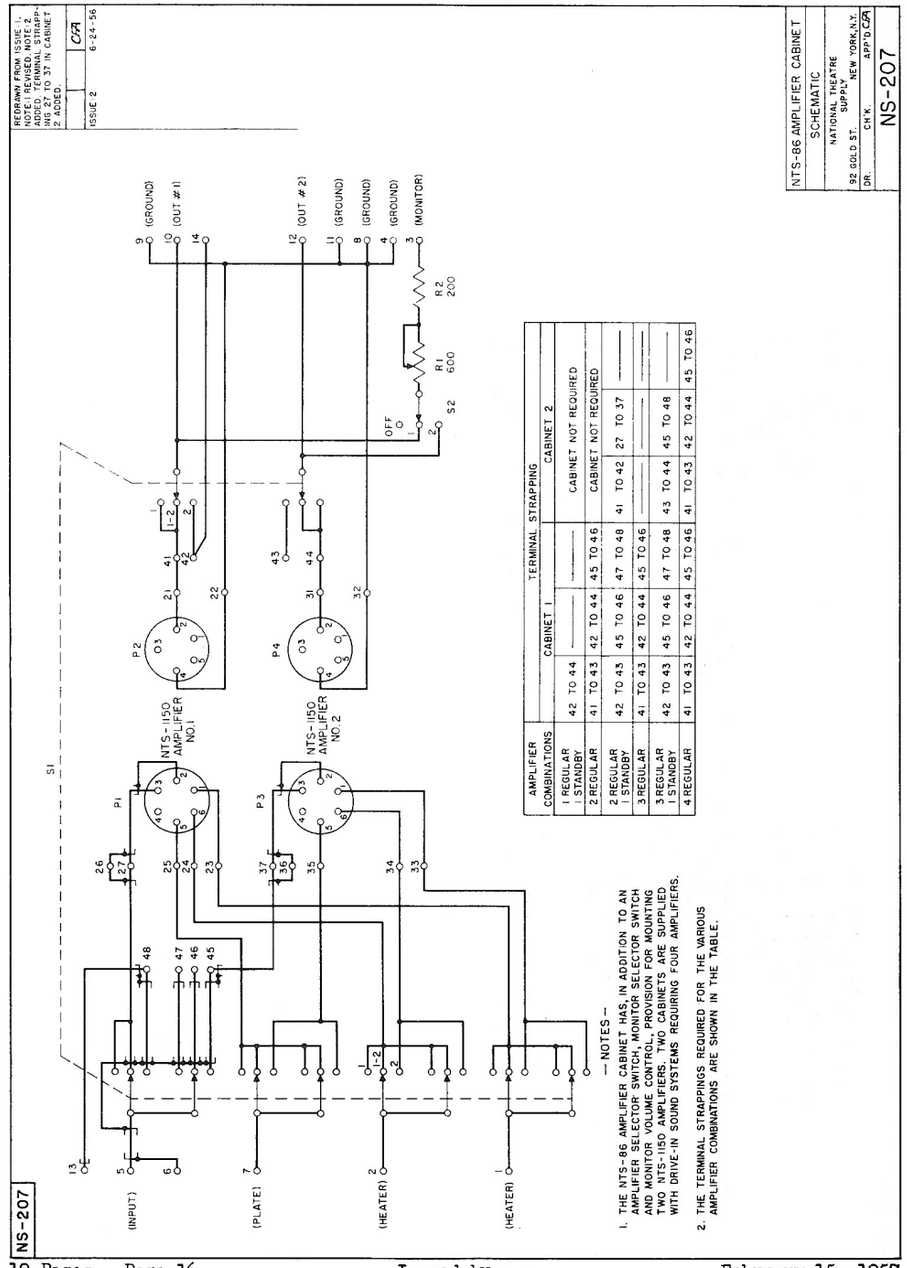
NS-207
NTS-86 AMPLIFIER CABINET
SCHEMATIC
NATIONAL THEATRE SUPPLY
92 GOLD ST. NEW YORK, N.Y.
DR. CH'K. APP'D. CFA
NS-207
REDRAWN FROM ISSUE 1. NOTE 1 REVISED. NOTE 2 ADDED. TERMINAL STRAPPING 27 TO 37 IN CABINET 2 ADDED.
ISSUE 2 6-24-56 CFA
TERMINAL STRAPPING
AMPLIFIER COMBINATIONS
CABINET 1
CABINET 2
1 REGULAR 1 STANDBY 42 TO 44 —— CABINET NOT REQUIRED
2 REGULAR 1 STANDBY 41 TO 43 42 TO 44 45 TO 46 CABINET NOT REQUIRED
2 REGULAR 1 STANDBY 42 TO 43 45 TO 46 47 TO 48 41 TO 42 27 TO 37
3 REGULAR 1 STANDBY 41 TO 43 42 TO 44 45 TO 46 —— —— ——
4 REGULAR 42 TO 43 45 TO 46 47 TO 48 43 TO 44 45 TO 48 ——
4 REGULAR 41 TO 43 42 TO 44 45 TO 46 41 TO 43 42 TO 44 45 TO 46
NTS-1150 AMPLIFIER NO.1
NTS-1150 AMPLIFIER NO.2
P1
P2
P3
P4
S1
S2
OFF
R1 600
R2 200
(GROUND)
(OUT #1)
(OUT #2)
(MONITOR)
(INPUT)
(PLATE)
(HEATER)
(HEATER)
— NOTES —
1. THE NTS-86 AMPLIFIER CABINET HAS, IN ADDITION TO AN AMPLIFIER SELECTOR SWITCH, MONITOR SELECTOR SWITCH AND MONITOR VOLUME CONTROL, PROVISION FOR MOUNTING TWO NTS-1150 AMPLIFIERS. TWO CABINETS ARE SUPPLIED WITH DRIVE-IN SOUND SYSTEMS REQUIRING FOUR AMPLIFIERS.
2. THE TERMINAL STRAPPINGS REQUIRED FOR THE VARIOUS AMPLIFIER COMBINATIONS ARE SHOWN IN THE TABLE.

NS-208

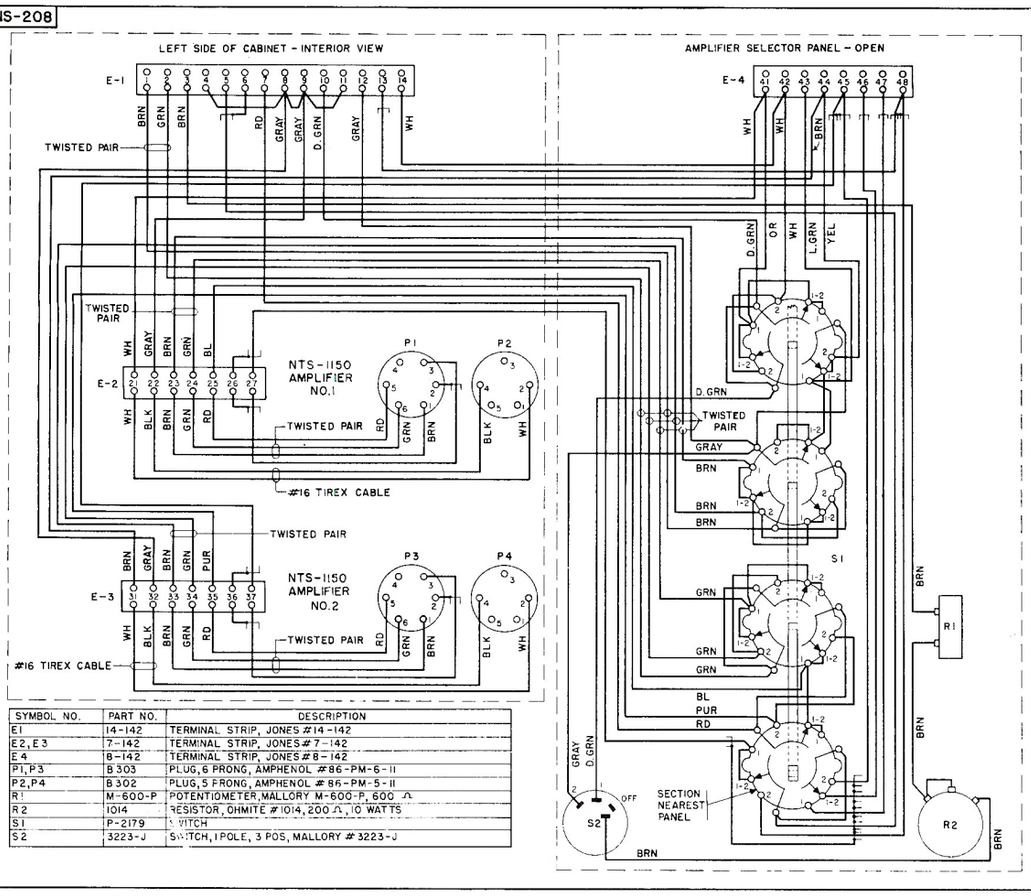

SYMBOL NO.	PART NO.	DESCRIPTION
E1	14-142	TERMINAL STRIP, JONES #14-142
E2, E3	7-142	TERMINAL STRIP, JONES #7-142
E4	8-142	TERMINAL STRIP, JONES #8-142
P1, P3	B 303	PLUG, 6 PRONG, AMPHENOL #86-PM-6-11
P2, P4	B 302	PLUG, 5 PRONG, AMPHENOL #86-PM-5-11
R1	M-600-P	POTENTIOMETER, MALLORY M-600-P, 600 Ω
R2	1014	RESISTOR, OHMITE #1014, 200 Ω, 10 WATTS
S1	P-2179	SWITCH
S2	3223-J	SWITCH, 1 POLE, 3 POS, MALLORY #3223-J

REDRAWN FROM ISSUE 1
COLOR CODING REVISED.
ISSUE 2 6-24-56

NTS-86
AMPLIFIER CABINET
WIRING DIAGRAM
NATIONAL THEATRE SUPPLY
92 GOLD ST. NEW YORK, N.Y.
DR. CH'K. APP'D. CG

NS-208

February 15, 1957
Issue #1

Issued by Engineering Dept.
Printed in U.S.A.

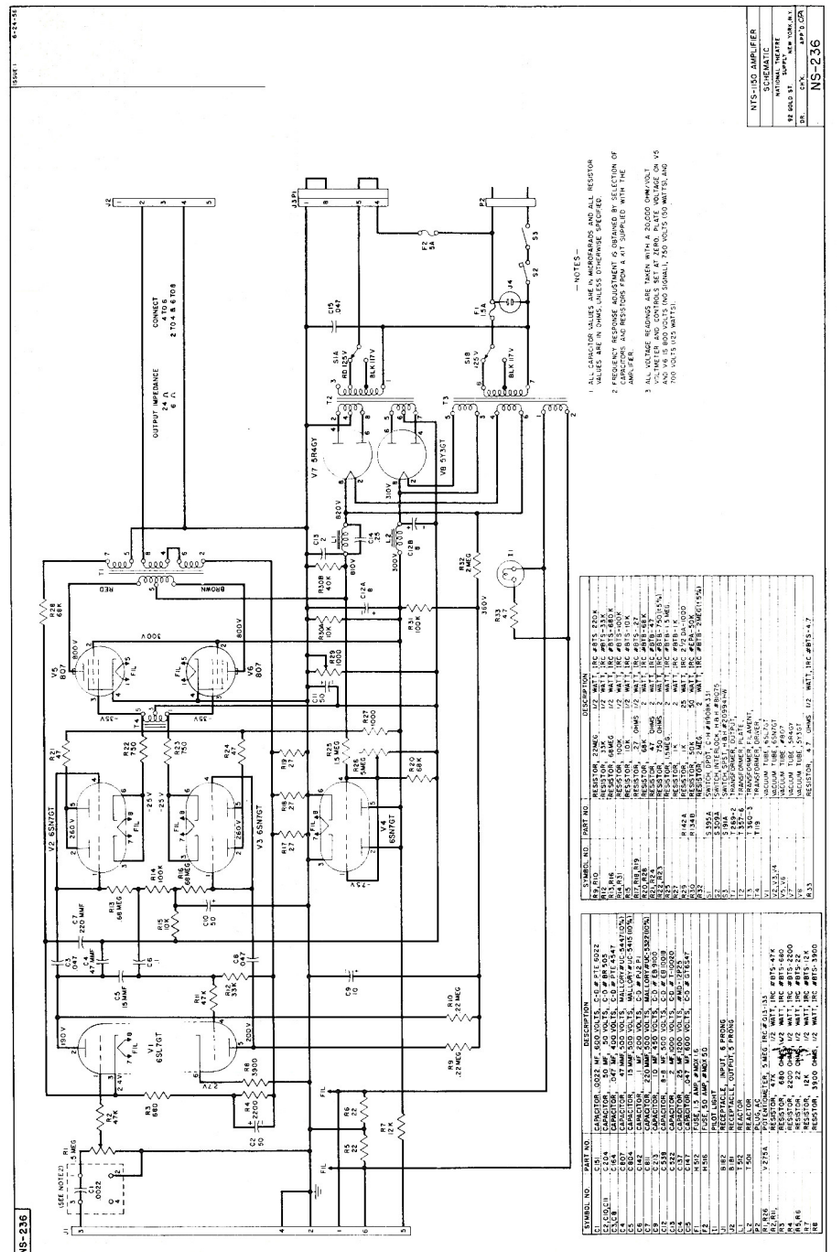

Issued by Engineering Dept.
Printed in U.S.A.
February 15, 1957
Issue #1

February 15, 1957
Issue #1

Issued by Engineering Dept.
Printed in U.S.A.

WC-1084

ISSUE
REDRAWN WITH EXTENSIVE CHANGES
ISSUE - 2 4-13-49

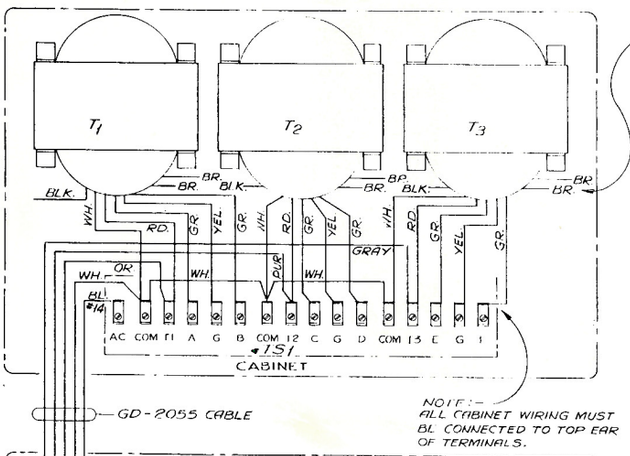

NOTE:-
LEAVE ALL BLK. (110V.) AND BR. (34V.) LEADS THE FULL LENGTH, TAPE AND INSULATE ENDS INDIVIDUALLY AND BEND OUT OF WAY.

NOTE:-
ALL CABINET WIRING MUST BE CONNECTED TO TOP EAR OF TERMINALS.

SCHEDULE

DESIGNATION	PART NO	APPARATUS
S1-S2-S3	PA-2563	SWITCH S.P.S.T.
FM1-FM2-FM3	PA-2564	RECEPTACLE-FUSE
F1-F2-F3	PA-2565	FUSE 10 AMP. 115V.
SKT1-SKT2-SKT3	PA-2557	SOCKET-IND. LAMP
LP1-LP2-LP3	PA-2558	LAMP-NEON 105/125V.
T1-T2-T3	PC-2525	TRANSFORMER
TS1	GC-2038	TERMINAL STRIP

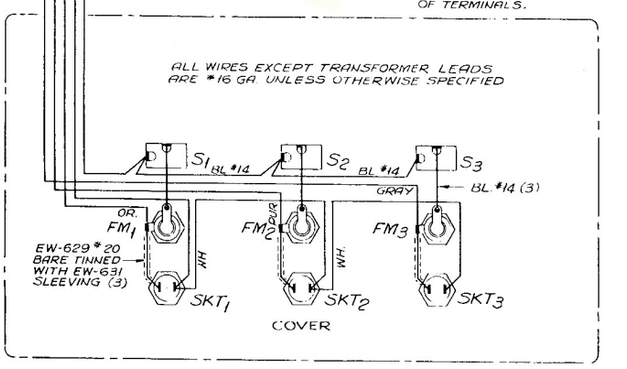

CABINET WIRING

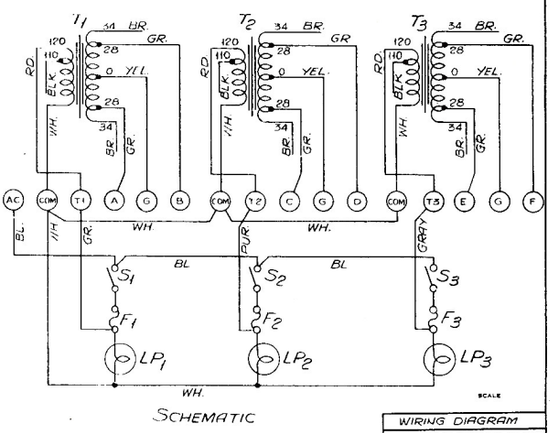

SCHEMATIC

WIRING DIAGRAM
PUE-1008 POWER SUPPLY
DRIVE-IN THEATRE LIGHTING
INTERNATIONAL PROJECTOR CORPORATION
85 LA FRANCE AVENUE
BLOOMFIELD NEW JERSEY
DR. RS CH'K APP'D

PRODUCT CLASS

WC-1084

EQUIPMENT LIST FOR SIMPLEX X-L SYSTEMS OPERATING ON 115 VOLT 60 CYCLE AC

SYSTEM	AMPL. POWER MIN. WATTS	CABINET KIT	POWER AMPLIFIER	NETWORK (NOTE 4)	POWER UNIT (NOTE 5)	H.F. HORN	STAGE SPEAKER EQPT. H.F. UNIT	L.F. HORN	L.F. UNIT
X-L2-11	20	AM-1032	AM-1027	LU-1103	PU-1009	2 x 4 2 x 5	1	1	1
X-L2-12	20	AM-1032	AM-1027	LU-1103	PU-1009	2 x 4 2 x 5	1	1	2
X-L4-12	40	AM-1033	AM-1027(2)	LU-1103	PU-1009	2 x 4 2 x 5	1	1	2
X-L4-22	40	AM-1033	AM-1027(2)	LU-1103	PU-1009	2 x 4 2 x 5 3 x 5	2	1	2
X-L6-12	60	AM-1032	AM-1026	LU-1103	PU-1009	2 x 4 2 x 5	1	1	2
X-L6-22	60	AM-1032	AM-1026	LU-1103	PU-1009	2 x 4 2 x 5 3 x 5	2	1	2
X-L6-24	60	AM-1032	AM-1026	LU-1103	PU-1009	2 x 5 3 x 5	2	2	4
X-L12-24	120	AM-1033	AM-1026(2)	LU-1103	PU-1009	2 x 5 3 x 5	2	2	4
X-L12-46	120	AM-1033	AM-1026(2)	LU-1103	PU-1009	3 x 5 3 x 6	4	3	6
DRIVE-IN						RAMP SWITCHING PANELS			
X-L7-D	70	AM-1037	AM-1026	-	PU-1005(2)	LU-3017			
X-L14-D	140	AM-1037 AM-1038	AM-1026(2)	-	PU-1005(2)	LU-3017			
X-L25-D	250	AM-1037	AM-1027 AM-1040	-	PU-1005(2)	LU-3017-3018			
X-L25X-D	250	AM-1037	AM-1027(2) AM-1040(2)	-	PU-1005(2)	LU-3017-3018			
X-L28-D	280	AM-1039	AM-1026(4)	-	PU-1005(2)	LU-3017-3018			

NOTES - 1. Three AM-1028 Pre-Amplifiers furnished; one for each Sound Mechanism, one for AM-1035 Non-Sync. Cabinet.
2. One AM-1035 Non-Sync. Cabinet with each system.
3. Two AM-197 Changeover Cabinets with each system.
4. AM-1029 Monitor Amplifier mounted in Network.
5. PU-1009 (60 cycles), PU-1010 (50 cycles). For two 9 volt, 4 amp. Lamps.

(See File 40.22 - Speaker Equipment)

Issued by
Engineering Department
Printed in U. S. A.

April 18, 1950
Issue #1

EQUIPMENT LIST FOR STANDARD SIMPLEX SYSTEMS
OPERATING ON 115 VOLT 60 CYCLE AC

EQUIPMENT	E	A & A-15	A-30	B-30 (Formerly B)	B-60	C-60 (Formerly C)	15 WATT SPECIAL	30 WATT SPECIAL
Power	10 Watts - 32 DB	15 Watts - 34 DB	30 Watts - 37 DB	30 Watts - 37 DB	60 Watts - 40 DB	60 Watts - 40 DB	15 Watts - 34 DB	30 Watts - 37 DB
Seat Limit	800	1,500	1,500 *	2,500	2,500 *	4,500	1,500	2,500
Volume Limit	100,000	200,000	200,000 *	500,000	500,000 *	1,200,000	200,000	500,000
Volume Control Amplifier(s)	1 AM-141 Ampl. Unit AM-1010	2 AM-101 Units each including 1 AM-1000 Amp.	2 AM-101 Units each including 2 AM-1000 Amps.	2 AM-101 Units each including 2 AM-1000 Amps. Note 2	2 AM-101 Units each including 2 AM-1000 Amps.	2 AM-101 Units each including 2 AM-1000 Amps. Note 2	2 AM-101 Units each including 1 AM-1000 Ampl.	2 AM-101 Units each including 1 AM-1000 Ampl.
Power Amplifier(s)	1 AM-142 Ampl. Eqpt. AM-1011	1 AM-1001	2 AM-1001	2 AM-1001	4 AM-1001	4 AM-1001	1 AM-1001	2 AM-1001
Monitor Amplifier	Incorporated as part of AM-1011	1 AM-1003	1 AM-1003	1 AM-1003	1 AM-1003	1 AM-1003	1 AM-1003	1 AM-1003
Monitor Unit and Horn	1 LU-1046 L. S. T. in AM-142	1 LU-1018 Unit 1 LU-1024 Horn	1 LU-1018 Unit 1 LU-1024 Horn	1 LU-1018 Unit 1 LU-1024 Horn	1 LU-1018 Unit 1 LU-1024 Horn	1 LU-1018 Unit 1 LU-1024 Horn	1 LU-1018 Unit 1 LU-1024 Horn	1 LU-1018 Unit 1 LU-1024 Horn
System Switching Panel	None	See Note 1	1 AM-2013	1 AM-2013	1 AM-2013	1 AM-2013	See Note 1	1 AM-2013
Network	1 LU-1047 12 ohm input	1 LU-1002 12 ohm input	1 LU-1002 12 ohm input	1 LU-1003 6 ohm input Note 3	1 LU-1003-X 6 ohm input	1 LU-1026 12 ohm input	1 LU-1026 12 ohm input	1 LU-1026 12 ohm input
Stage Speakers	1 LU-1060 HF PM 1 LU-1004 LF PM	1 LU-1060 HF PM 1 LU-1004 LF PM	1 LU-1060 HF PM 1 LU-1004 LF PM	2 LU-1060 HF PM 2 LU-1004 LF PM	2 LU-1060 HF PM 2 LU-1004 LF PM	2 LU-1011 HF 4 LU-1010 LF Note 5	2 LU-1011 HF 2 or 4 LU-1010 LF Notes 5 & 6	Same as 15 Watt Special
Stage Horns	1 LU-1049 HF 1x3 1 LU-1017 LF	1 LU-1001 HF 2x4 1 LU-1017 LF	1 LU-1001 HF 2x4 1 LU-1017 LF	1 LU-1029 HF 2x4 2 LU-1017 LF	1 LU-1029 HF 2x4 2 LU-1017 LF	1 LU-1012,1013,1014, or 1019 HF Note 4 2 LU-1015 LF	1 LU-1012,1013,1014, or 1019 HF Note 4 1 or 2 LU-1015 Note 6	Same as 15 Watt Special
Wings (Set)	None	1 LU-1041	1 LU-1041	1 LU-1042	1 LU-1042	1 LU-1040	1 LU-1039 or 1040	Same as 15 Watt Special
Power Unit(s)	1 PU-1005	1 PU-1000	1 PU-1000	1 PU-1000	1 PU-1000	1 PU-1000 1 PU-1003	1 PU-1000 1 PU-1003	1 PU-1000 1 PU-1003
Sound Mechanisms (Note 7)	2 SH-1000	2 SH-1000	2 SH-1000	2 SH-1000	2 SH-1000	2 SH-1000	2 SH-1000	2 SH-1000
Motors (Note 8)	2 SH-2053	2 SH-2053	2 SH-2053	2 SH-2053	2 SH-2053	2 SH-2053	2 SH-2053	2 SH-2053
Non-Synch. Attach.	Jack input in AM-142 Amp.	1 AM-2069	1 AM-2069	1 AM-2069	1 AM-2069	1 AM-2069	1 AM-2069	1 AM-2069

* Academy Ratings

NOTES:
1. AM-2049 Reg. Emergency Switch supplied where emergency amplifier installed.
2. Earlier B & C systems equipped with only 1 AM-1000 Volume Control Amplifier in each AM-101 Unit.
3. B-30 Systems equipped with LU-1003-X Network.
4. HF Horns supplied according to height and width of theatre. LU-1012 - 3x4; LU-1013 - 3x5; LU-1014 - 3x6; LU-1019 - 2x5.
5. These HF and LF speaker units are energized field type requiring 200 Volts DC from PU-1003 Power Unit.
6. System furnished with either 1 or 2 LF Horns and 2 or 4 LF speakers.
7. For push-pull operation the SH-106 Push-Pull Kit is installed in the SH-1000 Sound Mechanisms.
8. Where power is DC or 50 cycle AC - see installation drawings for code number of motors.

Printed in U. S. A.

Issue #1
October 8, 1941

ALTEC SERVICE CORPORATION
SIMPLEX
SOUND EQUIPMENT BULLETIN

THEATRE MAGNETIC SOUND SYSTEMS

DESCRIPTION	COMPONENT	SYSTEMS																									
		XL-32-28	XL-32-311	XL-36-322	XL-101	XL-202-D	XL-232-38	XL-232-39	XL-232-311	XL-232-312	XL-233-39	XL-233-311	XL-233-312	XL-236-312	XL-236-322	XL-236-324	XL-312-324	XL-400	XL-432-38	XL-432-39	XL-432-311	XL-432-312	XL-433-311	XL-436-322	XL-4312-324
Magnetic Reproducer	AM-210	1	1	1	-	-	-	-	-	-	*	-	-	-	-	-	1	-	-	-	-	-	-	-	-	-
Magnetic Soundhead (Mixer Type)	SH-1026	-	-	-	2	-	-	-	-	-	*	-	-	-	-	-	-	-	-	-	-	-	-	-	-	-
Magnetic Soundhead	SH-1025	-	-	-	1	2	2	2	2	2	2	2	2	2	2	-	-	2	-	2	2	2	2	2	2	2
3 Channel changeover & Warping Cab.	AM-202	1	1	1	-	2	2	-	2	-	-	-	-	2	-	2	1	-	2	1	1	1	1	1	1	1
3 Channel changeover Cabinet	AM-203	-	-	-	-	-	-	-	-	-	-	-	-	-	-	-	-	2	-	-	-	-	-	-	-	-
4 Channel changeover Cabinet	AM-211	-	-	-	2	2	2	2	2	2	2	2	2	2	2	2	-	-	2	1	1	1	1	1	1	1
Balance & Warping Cabinet	AM-212	-	-	-	-	-	1	1	1	-	1	1	-	1	1	-	-	-	1	-	-	-	-	-	-	-
System selector & control cab.	AM-213	-	-	-	1	1	-	-	-	-	-	-	-	-	-	-	-	-	-	-	-	-	-	-	-	-
Warping Unit	AM-1079	-	-	-	1	-	-	-	-	-	-	-	-	-	-	-	-	-	-	-	-	-	-	-	-	-
Pre-amplifier	AM-1065	-	-	-	2	3	4	4	4	4	4	4	4	4	4	4	-	8	8	8	8	8	8	8	8	8
Pre-amplifier cabinet	AM-1066	-	-	-	1	1	1	1	1	1	1	1	1	1	1	1	-	2	2	2	2	2	2	2	2	2
Pre-amplifier power supply	PU-1011	-	-	-	1	1	1	1	1	1	1	1	1	1	1	1	-	1	1	1	1	1	1	1	1	1
Power Supply cabinet	PU-1012	-	-	-	1	1	1	1	1	1	1	1	1	1	1	1	-	1	1	1	1	1	1	1	1	1
System cabinet	AM-1031	1	1	1	-	-	1	1	1	1	1	1	1	1	1	2	-	1	1	1	1	1	1	1	2	2
System cabinet kit	AM-1055	-	1	1	-	-	-	-	-	-	-	-	-	-	-	1	-	-	-	-	1	1	1	1	1	1
System cabinet kit	AM-1059	-	1	-	-	-	-	-	-	-	-	-	-	-	-	1	-	-	-	-	1	-	-	-	1	-
Power Amplifier	AM-1027	3	3	-	-	-	3	3	3	-	-	-	-	3	-	-	6	-	3	3	-	3	-	-	6	-
Power Amplifier	AM-1026	-	-	-	3	*	-	-	-	3	-	3	3	-	3	3	*	-	-	-	3	-	-	-	-	6
Power Amplifier	AM-1080	-	-	-	-	-	1	3	1	1	3	1	1	1	1	*	-	2	2	2	2	2	2	2	2	2
Control Unit	AM-1064	-	-	-	-	-	1	1	1	1	1	1	1	1	1	-	-	2	2	2	2	1	2	2	2	2
Loudspeaker Equipment	LU-141	3	-	-	-	-	*	-	-	-	-	-	-	-	-	-	-	-	-	-	-	-	-	-	-	-
Loudspeaker Equipment	LU-143	2	3	-	-	-	*	-	3	-	-	3	-	-	-	-	-	-	3	-	3	-	-	-	-	-
Loudspeaker Equipment	LU-144	-	-	-	-	-	*	-	-	3	-	-	3	3	-	-	-	-	-	-	-	3	-	-	-	-
Loudspeaker Equipment	LU-145	-	-	3	-	-	*	-	-	-	-	-	-	-	3	3	-	-	-	-	-	-	3	3	-	3
Loudspeaker Equipment	LU-146	-	-	-	-	-	*	-	-	-	-	-	-	-	-	-	-	-	-	-	-	-	-	-	-	-
Loudspeaker Equipment	LU-148	-	-	-	-	-	3	3	-	-	3	-	-	-	-	3	-	-	-	3	-	-	-	-	-	3
Loudspeaker Equipment	LU-160	-	-	-	-	-	-	-	3	3	-	3	3	-	3	-	-	-	-	-	-	-	-	-	-	-
Speaker Network	LU-1121	-	3	3	-	-	-	-	3	3	-	3	3	3	3	3	*	-	-	*	3	3	3	3	3	3
Auditorium Speaker	LU-150	*	*	-	-	-	*	-	-	-	*	-	-	-	*	*	-	-	*	*	-	-	-	-	-	-
Auditorium Speaker	LU-151	*	-	-	-	-	*	-	-	-	*	-	-	-	*	*	-	-	*	*	-	-	-	-	-	-
Remote Switch Box	AM-205	1	2	2	1	-	1	1	1	1	1	1	1	1	1	2	-	1	1	1	1	1	1	1	1	1
System Selector Box	AM-207	-	-	1	1	-	1	-	1	1	-	1	1	1	1	-	1	-	-	-	1	1	1	1	1	1
Mon. Ampl. & Control Panel Assm.	AM-1054	1	1	1	1	-	1	1	1	1	1	1	1	1	1	1	1	1	1	1	1	1	1	1	1	1
Monitor Speaker	LU-142	1	1	1	-	-	1	-	1	1	-	1	1	1	1	1	-	1	1	-	1	1	1	1	1	1
Speaker Switch Kit	LU-1122	1	1	1	-	-	1	1	1	1	1	1	1	1	1	1	-	1	1	1	1	1	1	1	1	1
Monitor Panel & System Cab. Kit	AM-1062	1	-	-	-	-	1	1	1	1	1	1	1	1	1	-	-	-	-	-	1	1	-	-	-	-
Power Supply Dummy Load	PU-1013	-	-	-	2	1	1	1	1	1	1	1	1	1	1	1	-	-	-	-	-	-	-	-	-	-
Spare Tube Kit	AM-1063	-	-	-	1	1	1	1	1	1	1	1	1	1	1	1	-	-	-	-	-	-	-	-	-	-
Spare Tube Kit	AM-1067	-	-	-	-	-	1	1	1	1	-	-	-	1	-	1	-	-	-	-	-	-	-	-	-	-
Spare Tube Kit	AM-1068	-	-	-	-	-	-	-	-	-	-	-	-	-	1	-	-	-	-	-	-	-	-	-	-	-
Spare Tube Kit	AM-1072	-	-	-	-	-	-	1	1	-	1	1	1	-	-	-	-	-	-	-	-	-	-	-	-	-

* Quantity depends on size and shape of theatre

Issued by
Engineering Department
Printed in U. S. A.

August 26, 1954
Issue #1

ALTEC SERVICE CORPORATION
SIMPLEX
SOUND EQUIPMENT BULLETIN
DRIVE-IN MAGNETIC SOUND SYSTEMS

ADDITIONAL PROJECTION ROOM SOUND EQUIPM. FOR TWO CHANNEL STEREO. SOUND	COMPONENT NUMBER	DESCRIPTION	EXISTING SYSTEM															
			SIMPLEX XL DRIVE-IN SOUND SYSTEM						SIMPLEX FOUR STAR DRIVE-IN SOUND SYSTEM						NTS DRIVE-IN SOUND SYSTEM			
			XL7-D	XL14-D	XL21-D	XL28-D	XL25-D	XL25X-D	F-70	F-140	F-210	F-280	F-250	F-250X	NTS-125	NTS-250	NTS-125RGX	NTS-250RGX
XL 202-D	SH-1025	Magnetic Sound Head	2	2	2	2	2	2	2	2	2	2	2	2	2	2	2	2
	AM-1065	Pre-amplifier	3	3	3	3	3	3	3	3	3	3	3	3	3	3	3	3
	AM-1066	Pre-amplifier Cabinet	1	1	1	1	1	1	1	1	1	1	1	1	1	1	1	1
	PU-1011	Pre-amplifier Power Supply	1	1	1	1	1	1	1	1	1	1	1	1	1	1	1	1
	PU-1012	Power Supply Cabinet	1	1	1	1	1	1	1	1	1	1	1	1	1	1	1	1
	PU-1013	Power Supply Dummy Load	1	1	1	1	1	1	1	1	1	1	1	1	1	1	1	1
	AM-211	Four Channel Changeover Cabinet	2	2	2	2	2	2	2	2	2	2	2	2	2	2	2	2
	AM-213	System Selector & Control Cabinet	1	1	1	1	1	1	1	1	1	1	1	1	1	1	1	1
	AM-1063	Spare Tube Kit	1	1	1	1	1	1	1	1	1	1	1	1	1	1	1	1
AMPLIFIERS	AM-1026	Power Amplifier	1	2	3	4	-	-	1	2	3	4	-	-	-	-	-	-
	AM-1027	Power Amplifier	-	-	-	-	1	-	-	-	-	-	1	-	-	-	-	-
	AM-1040	Power Amplifier	-	-	-	-	1	-	-	-	-	-	1	-	-	-	-	-
	NTS-1125	Power Amplifier	-	-	-	-	-	-	-	-	-	-	-	-	1	2	1	2
CABINETS AND KITS	AM-1031	System Cabinet (4 place)	-	-	1	1	-	-	-	-	1	1	-	-	-	-	-	-
	AM-1034	System Cabinet	1	2	-	-	1	-	1	2	-	-	1	-	-	-	-	-
	AM-1037	System Cabinet Kit	1	1	-	-	1	-	1	1	-	-	1	-	-	-	-	-
	AM-1038	" " "	-	1	-	-	-	-	-	1	-	-	-	-	-	-	-	-
	AM-1039	" " "	-	-	1	1	-	-	-	-	1	1	-	-	-	-	-	-
	NTS-69	Monitor Volume Control	-	-	-	-	-	-	-	-	-	-	-	-	1	-	1	-
	NTS-70	Mon.Vol.Cont. & Ampl.Selector Sw.	-	-	-	-	-	-	-	-	-	-	-	-	-	1	-	1
RAMP CONTROL AND MONITOR SPEAKERS	LU-3016	Control Panel Cabinet	-	-	1	1	1	1	1	1	1	1	1	1	-	-	-	1
	LU-3017	Mon. Selector & Ramp Cont. Panel	1	1	1	1	1	1	1	1	1	1	1	1	-	-	-	-
	LU-3018	Ampl. Selector & Ramp Cont. Panel	-	-	1	1	1	1	-	-	1	1	1	1	-	-	1	2
	LU-3019	Panel Blank	-	-	-	-	-	-	1	1	-	-	-	-	-	-	-	-
	LU-1/2	Monitor Speaker Assembly	1	1	1	1	1	1	1	1	1	1	1	1	-	-	-	-
	LU-1018	Monitor Unit	-	-	-	-	-	-	-	-	-	-	-	-	1	1	1	1
	LU-1024	Monitor Horn	-	-	-	-	-	-	-	-	-	-	-	-	1	1	1	1

1. STARTING THE SYSTEM

A. AC Power. On "E" Systems turn on the AM-142 Amplifier Equipment and PU-1005 Power Unit by setting the main AC power supply switch in "ON" position. On all other systems, turn on by setting AC switches on the AM-1001 Amplifier(s) and the Power Unit(s) in "ON" position.

NOTE:- If a master switch is provided in the main power supply to the System Cabinet, these "AC" switches may be left in the "ON"position, and the AC power supply controlled by the master switch.

If the main power supply is DC, the rotary converter should be started before the "AC" switches are thrown in "ON" position.

B. AM-1001 Amplifier. Test the Vacuum Tubes in each amplifier daily. Replace any defective tubes at once.

C. PU-1000 Power Unit. Set "Output" switch in "REC" position. Tungar bulbs should begin to glow immediately, the exciter lamp and pilot lamp in one AM-101 Volume Control Amplifier should be bright (4 amps. 9 volts DC). In the other AM-101 Amplifier the pilot lamp should be out, and the exciter lamp dim (2 volts AC).

D. SH-1000 Sound Mechanism.

(1) Lubrication. Lubricate per the "Sound Mechanism Lubrication Chart".

(2) Optical System. Clean exciter lamp, photo-electric cell, reflector lens and lens tube lenses carefully each day with lens tissue. Be sure that all dirt, oil and finger prints are removed.

Check the spot of light on the photo-electric cell daily. It should be 7/16" in diameter and centered on the cathode. Readjust if necessary.

E. Drive Motor. Run each motor for five minutes before starting the show to thoroughly distribute the oil in the gear box. In cold weather, turn the motor over by hand a few times before turning on the power.

F. AM-101 Volume Control Amplifier. Be sure the switch on one of the amplifier terminals strips in each cabinet is set in "ON" position. The switch on the other amplifier terminal strip in each cabinet should be set in "OFF" position. Check the changeover switch during the sound test by changing over at each position twice.

G. Network. Set "H.F." and "L.F." and "Monitor Ampl." switches in "ON" position.

H. AM-2013 Switch. (where installed)

A. Set in position "1-2" for normal operation. All AM-1001 amplifiers operate in parallel.

B. In systems having two AM-1001 Amplifiers, Amplifier #1 (lower) only is operative when the switch is in position "1" Amplifier #2 being disconnected. Amplifier #2 (upper) only is operative when the switch is in position "2", Amplifier #1 being disconnected.

C. In systems having four AM-1001 Amplifiers, amplifiers #1 and #3 (upper cabinet) only are operative when the switch is in position "1", amplifiers #2 and #4 being disconnected. Amplifiers #2 and #4 (lower cabinet) only are operative when the switch is in position #2, amplifiers #1 and #3 being disconnected.

D. Set the switch in all three positions each day and test for sound quality.

I. Sound Test. For a preliminary sound test, move a card rapidly in and out of the light beam (exciter lamp bright) between the reflector lens and the photoelectric cell in each mechanism. A "thump" should be heard from the stage and monitor speakers. If possible, a short reel should be run in each machine to test for sound quality, and at the same time test the stage loudspeakers.

J. Stage Speaker Testing. Stage speakers should be tested each day by means of the switches on the network panel. The procedure is described in Equipment Instruction packed with the network.

2. RUNNING THE SHOW.

A. Threading the Mechanism. The film should be threaded in an "OFF" sound mechanism (exciter lamp dim) in accordance with Equipment Bulletin "SH-1000 Sound Mechanism". This applies especially to the first reel of the show, to prevent threading noises reaching the audience.

Be sure that the lateral guide roller is closed after film is threaded. If the mechanism door does not close, the lateral guide roller is open. Pull the lateral guide roller assembly outward, after threading is completed, until it is in firm contact with the knurled adjusting nut. In some instances the assembly may be pushed inward as it is closed, and may not return to its proper position due to friction. Sprocket hole noise will occur, and cannot be remedied by adjustment.

B. Starting the Projector. Turn the power switch on the motor to "ON", and when the motor is up to speed make the sound changeover.

C. Changeover. In the "E" System the changeover is made by operating the SN-1087 Changeover Switch at either machine. In all other systems, to make sound changeover, operate the changeover switch in either Volume Control Amplifier. The three-way circuit used permits changeover at either machine.

3. STOPPING THE SYSTEM.

A. In "E" Systems set the main "AC" power supply switch in the "OFF" position. In other systems set "AC" switches on the AM-1001 Amplifiers and the Power Unit(s) (or the master power switch) in "OFF" position.

B. In the SH-1000 Sound Mechanism leave the lateral guide roller open. If it is left closed flat spots will develop on the felt roller, cause flutter and make replacement necessary.

1. SOUND MECHANISM SCANNING SYSTEM

The exciter lamp, lens tube, reflector lens and lateral guide roller are adjusted for optimum response at the factory and should be received ready for operation. If however, there is definite evidence that the scanning system is out of adjustment, readjustments should be carefully made in accordance with the procedure in Equipment Bulletin, "SH-1000 Sound Mechanism".

A. To facilitate adjustments of the lens tube, using an 8,000 cycle test film,as described in Equipment Bulletin "SH-1000 Sound Mechanism", the temporary wiring changes (referred to factory adjustment) in the warping circuit of the AM-1001 Amplifier, as shown in Figure 1 are recommended. Similar changes should be made in the warping circuit of the AM-142 Amplifier Equipment and in the high frequency equalization in the AM-141 Volume Control Amplifier as shown in Figures 2 & 3. These changes raise the characteristic at the high end in contrast to the normal droop, and thereby increase the accuracy of the adjustment. The warping circuit should be restored to normal after the adjustments have been completed.

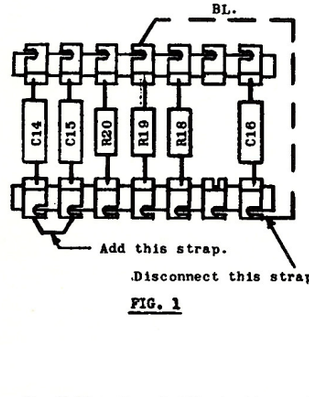

FIG. 1

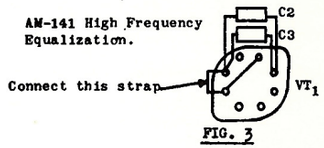

FIG. 3

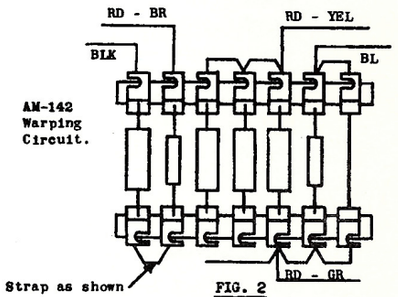

FIG. 2

B. Uniformity of illumination and correct positioning of the lateral guide roller should be checked with the A17P-1 Test Film and buzz track film.

2. ADJUSTMENT OF GAIN

In the AM-1001 Amplifier an adjustable gain control is provided so that adequate volume level may be obtained in an auditorium with a normal setting of step 9 of the main volume control in the AM-101 Volume Control Amplifier. To set this gain control, turn the main volume control in the AM-101 to step 9, run an average standard print (Academy Test Reel may be used), and adjust the gain control in the amplifier so that adequate volume is obtained in the auditorium. Once adjusted there should be no necessity for readjustment, as the main volume control in the AM-101 should be adjusted to take care of variations in prints, size of audience, etc. In the AM-141 Volume Control Amplifier adjust the main volume control as required to obtain adequate volume in the auditorium.

3. PHASING OF STAGE LOUDSPEAKERS

A. Connections - The following are the stage speaker combinations.

1 - One H.F and one L.F. Speaker are connected across the high and low frequency leg of the network respectively.

2 - Two H.F and two L.F. Speakers are connected in parallel across the high and low frequency leg of the network respectively.

3 - Two H.F. speakers are connected in parallel across the high frequency leg of the network and four L.F. Speakers are connected in series parallel across the low frequency leg of the network.

B. Testing - Where P.M. Speakers are installed the high and low frequency speakers should be out-of-phase electrically with respect to each other. Each should be tested by connecting

a DC voltmeter to terminals "L_1" and "L_2", the same lead to the same terminal of each unit. On the LF unit depress the diaphragm by hand from the front of the unit. The deflection should be in the same direction for each unit. On the HF unit depress the diaphragm by a sharp blow on the orifice with the palm of the hand. The deflection of the meter should be in the opposite direction.

Where energized field speakers are employed the high and low frequency speakers should be in phase electrically with respect to each other. Each should be tested by connecting a DC voltmeter across the speech terminals, the same lead to the same terminal of each unit, and a battery across the field terminals, the negative and positive battery terminals being connected to the negative and positive terminals of each speaker field coil respectively. The voltmeter should show a deflection in the same direction on each speaker when the battery supply is opened. Do not break the loud speaker field supply circuit to test polarity as the speakers may be damaged.

C. Positioning of Horns - The horns should be positioned initially in accordance with the Eq. Instruction packed with the set of wings or with LU-1049 Horn & Cradle. After the horns have been finally set for distribution (See Section 5), a standard test reel should be run and the high frequency horn and cradle moved back and forth until best quality is obtained. Then fasten the cradle securely in position.

D. High and Low Frequency Loud Speaker Units.

(1) The LU-1060 High Frequency Loud Speaker Unit is a permanent magnet, metal diaphragm, moving coil speaker, 7" in diameter and weighing 21 lbs. The voice coil impedance is 18 ohms. In all but the "E" system, one unit mounts on the LU-1001 (2 x 4) High Frequency Horn, or two units on the LU-1029 (2 x 4) High Frequency Horn. The high frequency horns are multicellular, exponential horns made of terneplate. In the "E" system one unit mounts on the LU-1049 (1 x 3) High Frequency Horn. This horn is a multicellular exponential horn made of special lead coated metal.

(2) The LU-1011 High Frequency Loud Speaker Unit is an energized, metal diaphragm, moving coil speaker, 6-1/2" in diameter and weighing 26 lbs. The voice coil impedance is 22 ohms. The field coil resistance is 2500 ohms and field excitation of 220 volts DC, is obtained from the PU-1003 Power Unit. Two units mount on the LU-1012 (3 x 4), LU-1013 (3 x 5), LU-1014 (3 x 6) or LU-1019 (2 x 5) High Frequency Horn. The high frequency horns are multicellular, exponential horns made of lead coated metal.

(3) The LU-1004 Low Frequency Loud Speaker Unit is a permanent magnet, moving coil, cone type speaker, 15" in diameter and weighing 20 lbs. The voice coil impedance is 12 ohms. One unit mounts in each LU-1017 Low Frequency Horn. The LU-1017 is a wooden, folded, exponential horn.

(4) The LU-1010 Low Frequency Loud Speaker Unit is an energized, moving coil, cone type speaker, 15" in diameter and weighing 27 lbs. The voice coil impedance is 6 ohms. The field coil resistance is 1600 ohms and field excitation of 220 volts DC is obtained from the PU-1003 Power Unit. Two of these units mount in each LU-1015 Low Frequency Horn. The LU-1015 is a wooden, folded, exponential horn.

4. FREQUENCY RESPONSE ADJUSTMENTS

A. For AM-1001 Amplifiers.

The Warping Circuit in each AM-1001 Amplifier is set for the L_2 H_2 ourve (See drawing SC-21). If, after carefully positioning the horns in accordance with Sections 3 and 5, careful listening tests indicate the necessity for a change in the frequency response characteristic, the warping circuit may be adjusted per drawing SC-21.

B. For AM-141 and 142 Amplifiers

The High and Low End Warping Circuit in the AM-142 Amplifier Equipment is set for the L_{11}, H_{14} curve (See drawing SC-43), while the high frequency equalization in the AM-141 Volume Control Amplifier is "out" as shipped. If, after carefully positioning the horns in accordance with Sections 3 and 5, careful listening tests in the auditorium using the test film (not the monitor speaker in the Projection Room) indicate the necessity for a change in the frequency response characteristic, the warping circuit and high frequency equalization may be adjusted per the associated drawing SC-43.

C. In Concealed Conduit Installations #8401 Belden Microphone Cable should be substituted for the SN-1101 Coaxial Cable furnished for exposed conduit installations. Due to a difference in the capacity of the two cables, a compensating capacitor should be added in each AM-1011 Amplifier in the AM-142 Amplifier Equipment, when #8401 Belden is used, to obtain the frequency response characteristics shown on drawing SC-43. Refer to Equipment Instruction "Cable, #8401 Belden Microphone" for the size and method of connecting the additional capacitor.

5. ACOUSTICS OF AUDITORIUMS

The shape of the auditorium, the material used on the walls and ceiling, the decorative drapes on the walls and the type of seats and carpeting used determine the acoustic properties of the auditorium and the final positioning of the stage horns. When reverberation and reflections are encountered, special considerations apply.

A. Reverberation - Where reverberation exists due to wall and ceiling contour and non-absorbent qualities of surfaces, the stage horns should be set so that direct sound is projected into the seating area and does not strike any reflective surfaces.

B. Reflection - In auditoriums, having large reflective surfaces, such as flat or curved walls, ceiling domes, etc., reflected sound may be concentrated in certain areas within the seating section of the auditorium. Such a condition, depending upon the source of the reflected sound, is known as side wall, back wall or ceiling "slap", and results in distorted sound in those areas.

(1) Side Wall "Slap". To eliminate side wall "Slap", the two upper, outside cells of the high frequency horn may be plugged with wool yarn. Do not pack tight. The yarn should be in a loosely formed cone.

(2) Ceiling "Slap". Tilting the high frequency horn downward so that the direct sound is projected into the seating area and does not strike the ceiling will generally eliminate ceiling "Slap".

(3) Back Wall "Slap". This condition is probably the most difficult to clear, especially in houses with high balconies or large unbroken back wall areas as the direct sound may be reflected from the back wall to the seating area, or to the ceiling and then into the seating area. Under these conditions the following adjustments are suggested

(a) If possible, the high frequency horn should be tilted downward so that direct sound is just heard in the last row of seats, in which case the audience and seats will usually absorb the sound and avoid reflections.

(b) If the condition still exists, the entire loud speaker system should be moved off center on the stage and adjusted to give proper distribution. This change alters the reflection pattern, and back wall "slap" may not be noticeable.

(c) Another method of altering the reflection pattern is to angle the loud speaker system with respect to the screen. The amount of rotation necessary for effective results depends upon the size and shape of the auditorium and the nature of the surfaces. Care should be exercised in this procedure so as not to introduce "screen slap", which may be caused by too much angling of the horns.

Simplex **** SOUND System

TYPE "A-15" SYSTEM EMERGENCY FEATURES AND HOW TO USE THEM

INOPERATIVE APPARATUS		EMERGENCY PROCEDURE
1. ONE EXCITER LAMP. (LAMP BURNED OUT.)		REPLACE EXCITER LAMP. (PREFOCUSED BASE LAMP MAY BE USED TEMPORARILY WITHOUT ADJUSTMENT. CHECK ADJUSTMENT AS SOON AS POSSIBLE.)
2. PU-1000 POWER UNIT. (TUNGAR BULBS NOT LIGHTED, "ON" MECHANISM EXCITER LAMP AND PILOT LAMP NOT LIGHTED.)		SET "OUTPUT" SWITCH ON PU-1000 IN "AC" POSITION. (EXCITER LAMP SUPPLY AC.)
3. HIGH FREQUENCY STAGE SPEAKER. (NO HIGH FREQUENCIES REPRODUCED.)	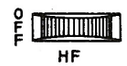	SET "HF" SWITCH ON LU-1002 NETWORK IN "OFF" POSITION. (ALL FREQUENCIES REPRODUCED BY LOW FREQUENCY STAGE SPEAKER.)
4. LOW FREQUENCY STAGE SPEAKER. (NO LOW FREQUENCIES REPRODUCED.)	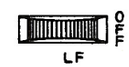	SET "LF" SWITCH ON LU-1002 NETWORK IN "OFF" POSITION. (PREVENTS OVERLOADING H.F.SPEAKER AND MAINTAINS CONSTANT IMPEDANCE.)
5. AM-1003 AMPLIFIER (MONITOR NOT OPERATING.)		SET "MON.AMPL." SWITCH ON LU-1002 NETWORK CHASSIS IN "OFF" POSITION. (LU-1018 MONITOR UNIT OPERATES ACROSS NETWORK INPUT.)
6. AM-1000 AMPLIFIER - SYSTEMS HAVING TWO AM-1000 AMPLIFIERS IN EACH AM-101 VOLUME CONTROL AMPLIFIER.	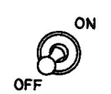	SET INOPERATIVE AMPLIFIER SWITCH IN "OFF" POSITION, AND STANDBY AMPLIFIER IN "ON" POSITION.
7. AM-1001 AMPLIFIER - SYSTEMS HAVING EMERGENCY AM-1001. (NO SOUND OR QUALITY POOR - NO PLATE METER READINGS.)		SET AM-2049 SWITCH IN "EMER" POSITION. (EMERGENCY AMPLIFIER CONNECTED, REGULAR AMPLIFIER DISCONNECTED.)

IF THE SYSTEM BECOMES INOPERATIVE, FOLLOW THE ABOVE EMERGENCY PROCEDURE TO RESTORE SOUND TEMPORARILY

Printed in U.S.A.
Issue #1
October 3, 1941

Simplex **** SOUND System

TYPE "A-30" SYSTEM EMERGENCY FEATURES AND HOW TO USE THEM

INOPERATIVE APPARATUS	EMERGENCY PROCEDURE
1. ONE EXCITER LAMP. (LAMP BURNED OUT.)	REPLACE EXCITER LAMP. (PREFOCUSED BASE LAMP MAY BE USED TEMPORARILY WITHOUT ADJUSTMENT. CHECK ADJUSTMENT AS SOON AS POSSIBLE.)
2. PU-1000 POWER UNIT. (TUNGAR BULBS NOT LIGHTED, "ON" MECHANISM EXCITER LAMP AND PILOT LAMP NOT LIGHTED.)	 SET "OUTPUT" SWITCH ON PU-1000 IN "AC" POSITION. (EXCITER LAMP SUPPLY AC.)
3. AM-1001 AMPLIFIER #1. (NO SOUND OR QUALITY POOR - NO PLATE METER READINGS.)	 SET AM-2013 SWITCH IN POSITION "2". (AMPLIFIER #2 CONNECTED, #1 DISCONNECTED.)
4. AM-1001 AMPLIFIER #2. (NO SOUND OR QUALITY POOR - NO PLATE METER READINGS.)	 SET AM-2013 SWITCH IN POSITION "1". (AMPLIFIER #1 CONNECTED, #2 DISCONNECTED.)
5. HIGH FREQUENCY STAGE SPEAKER(S). (NO HIGH FREQUENCIES REPRODUCED.)	 SET "HF" SWITCH ON NETWORK IN "OFF" POSITION. (ALL FREQUENCIES REPRODUCED BY LOW FREQUENCY STAGE SPEAKERS.)
6. LOW FREQUENCY STAGE SPEAKER(S). (NO LOW FREQUENCIES REPRODUCED.)	 SET "LF" SWITCH ON NETWORK IN "OFF" POSITION. (PREVENTS OVERLOADING H.F. SPEAKERS AND MAINTAINS CONSTANT IMPEDANCE.)
7. AM-1003 AMPLIFIER (MONITOR NOT OPERATING.)	 SET "MON. AMPL." SWITCH ON NETWORK CHASSIS IN "OFF" POSITION. (LU-1018 MONITOR UNIT OPERATES ACROSS NETWORK INPUT.)
8. AM-1000 AMPLIFIER-EITHER OF THE TWO IN EACH AM-101 VOLUME CONTROL AMPLIFIER. (NO SOUND.)	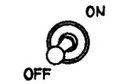 SET INOPERATIVE AMPLIFIER SWITCH IN "OFF" POSITION, AND STANDBY AMPLIFIER IN "ON" POSITION.

IF THE SYSTEM BECOMES INOPERATIVE, FOLLOW THE ABOVE EMERGENCY PROCEDURE TO RESTORE SOUND TEMPORARILY.

Printed in U.S.A. Issue #1
October 3, 1941

Simplex **** SOUND System

TYPE "B-30" SYSTEM EMERGENCY FEATURES AND HOW TO USE THEM

INOPERATIVE APPARATUS	EMERGENCY PROCEDURE
1. ONE EXCITER LAMP. (LAMP BURNED OUT.)	REPLACE EXCITER LAMP. (PREFOCUSED BASE LAMP MAY BE USED TEMPORARILY WITHOUT ADJUSTMENT. CHECK ADJUSTMENT AS SOON AS POSSIBLE)
2. PU-1000 POWER UNIT. (TUNGAR BULBS NOT LIGHTED, "ON" MECHANISM EXCITER LAMP AND PILOT LAMP NOT LIGHTED.)	 SET "OUTPUT" SWITCH ON PU-1000 IN "AC" POSITION. (EXCITER LAMP SUPPLY AC.)
3. AM-1001 AMPLIFIER #1. (NO SOUND OR QUALITY POOR - NO PLATE METER READINGS.)	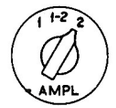 SET AM-2013 SWITCH IN POSITION "2". (AMPLIFIER #2 CONNECTED, #1 DISCONNECTED.)
4. AM-1001 AMPLIFIER #2. (NO SOUND OR QUALITY POOR - NO PLATE METER READINGS.)	 SET AM-2013 SWITCH IN POSITION "1". (AMPLIFIER #1 CONNECTED, #2 DISCONNECTED.)
5. HIGH FREQUENCY STAGE SPEAKER(S). (NO HIGH FREQUENCIES REPRODUCED.)	 SET "HF" SWITCH ON NETWORK IN "OFF" POSITION. (ALL FREQUENCIES REPRODUCED BY LOW FREQUENCY STAGE SPEAKERS.)
6. LOW FREQUENCY STAGE SPEAKER(S). (NO LOW FREQUENCIES REPRODUCED.)	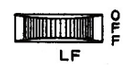 SET "LF" SWITCH ON NETWORK IN "OFF" POSITION. (PREVENTS OVERLOADING H.F. SPEAKERS AND MAINTAINS CONSTANT IMPEDANCE.)
7. AM 1003 AMPLIFIER (MON TOR NOT OPERATING.)	 SET "MON. AMPL." SWITCH ON NETWORK CHASSIS IN "OFF" POSITION. (LU-1018 MONITOR UNIT OPERATES ACROSS NETWORK INPUT.)
8. AM 1000 AMPLIFIER-EITHER OF THE TWO IN EACH AM-101 VOLUME CONTROL AMPLIFIER. (NO SOUND.)	 SET INOPERATIVE AMPLIFIER SWITCH IN "OFF" POSITION, AND STANDBY AMPLIFIER IN "ON" POSITION.

IF THE SYSTEM BECOMES INOPERATIVE, FOLLOW THE ABOVE EMERGENCY PROCEDURE TO RESTORE SOUND TEMPORARILY.

Printed in U.S.A.
Issue #1
October 3, 1941

Simplex ★★★★ SOUND System

TYPE "B-60" SYSTEM EMERGENCY FEATURES AND HOW TO USE THEM

INOPERATIVE APPARATUS	EMERGENCY PROCEDURE
1. ONE EXCITER LAMP. (LAMP BURNED OUT.)	REPLACE EXCITER LAMP. (PREFOCUSED BASE LAMP MAY BE USED TEMPORARILY WITHOUT ADJUSTMENT. CHECK ADJUSTMENT AS SOON AS POSSIBLE.)
2. PU-1000 POWER UNIT. (TUNGAR BULBS NOT LIGHTED, "ON" MECHANISM EXCITER LAMP AND PILOT LAMP NOT LIGHTED.)	 SET "OUTPUT" SWITCH ON PU-1000 IN "AC" POSITION. (EXCITER LAMP SUPPLY AC.)
3. AM-1001 AMPLIFIER #1 OR #3. (NO SOUND OR QUALITY POOR- NO PLATE METER READINGS.)	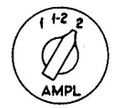 SET AM-2013 SWITCH IN POSITION "2". (AMPLIFIERS #2 AND #4 CONNECTED, #1 AND #3 DISCONNECTED.)
4. AM-1001 AMPLIFIER #2 OR #4. (NO SOUND OR QUALITY POOR - NO PLATE METER READINGS.)	 SET AM-2013 SWITCH IN POSITION "1". (AMPLIFIERS #1 AND #3 CONNECTED, #2 AND #4 DISCONNECTED.)
5. HIGH FREQUENCY STAGE SPEAKER(S). (NO HIGH FREQUENCIES REPRODUCED.)	 SET "HF" SWITCH ON NETWORK IN "OFF" POSITION. (ALL FREQUENCIES REPRODUCED BY LOW FREQUENCY STAGE SPEAKERS.)
6. LOW FREQUENCY STAGE SPEAKER(S). (NO LOW FREQUENCIES REPRODUCED.)	 SET "LF" SWITCH ON NETWORK IN "OFF" POSITION. (PREVENTS OVERLOADING H.F. SPEAKERS AND MAINTAINS CONSTANT IMPEDANCE.)
7. AM-1003 AMPLIFIER. (MONITOR NOT OPERATING.)	 SET "MON. AMPL." SWITCH ON NETWORK CHASSIS IN "OFF" POSITION. (LU-1018 MONITOR UNIT OPERATES ACROSS NETWORK INPUT.)
8. AM-1000 AMPLIFIER-EITHER OF THE TWO IN EACH AM-101 VOLUME CONTROL AMPLIFIER. (NO SOUND.)	 **SET INOPERATIVE AMPLIFIER SWITCH IN "OFF" POSITION, AND STANDBY AMPLIFIER IN "ON" POSITION.**

IF THE SYSTEM BECOMES INOPERATIVE, FOLLOW THE ABOVE EMERGENCY PROCEDURE TO RESTORE SOUND TEMPORARILY.

Printed in U.S.A.
Issue #1
October 3, 1941

Simplex ★★★★ SOUND System

TYPE "C-60" SYSTEM EMERGENCY FEATURES AND HOW TO USE THEM

INOPERATIVE APPARATUS	EMERGENCY PROCEDURE
1. ONE EXCITER LAMP. (LAMP BURNED OUT.)	REPLACE EXCITER LAMP. (PREFOCUSED BASE LAMP MAY BE USED TEMPORARILY WITHOUT ADJUSTMENT. CHECK ADJUSTMENT AS SOON AS POSSIBLE.)
2. PU-1000 POWER UNIT. (TUNGAR BULBS NOT LIGHTED, "ON" MECHANISM EXCITER LAMP AND PILOT LAMP NOT LIGHTED.)	 SET "OUTPUT" SWITCH ON PU-1000 IN "AC" POSITION. (EXCITER LAMP SUPPLY AC.)
3. AM-1001 AMPLIFIER #1 OR #3. (NO SOUND OR QUALITY POOR- NO PLATE METER READINGS.)	 SET AM-2013 SWITCH IN POSITION "2". (AMPLIFIERS #2 AND #4 CONNECTED, #1 AND #3 DISCONNECTED.)
4. AM-1001 AMPLIFIER #2 OR #4. (NO SOUND OR QUALITY POOR - NO PLATE METER READINGS.)	 SET AM-2013 SWITCH IN POSITION "1". (AMPLIFIERS #1 AND #3 CONNECTED, #2 AND #4 DISCONNECTED.)
5. HIGH FREQUENCY STAGE SPEAKER(S). (NO HIGH FREQUENCIES REPRODUCED.)	 SET "HF" SWITCH ON NETWORK IN "OFF" POSITION. (ALL FREQUENCIES REPRODUCED BY LOW FREQUENCY STAGE SPEAKERS.)
6. LOW FREQUENCY STAGE SPEAKER(S). (NO LOW FREQUENCIES REPRODUCED.)	 SET "LF" SWITCH ON NETWORK IN "OFF" POSITION. (PREVENTS OVERLOADING H.F. SPEAKERS AND MAINTAINS CONSTANT IMPEDANCE.)
7. AM-1003 AMPLIFIER. (MONITOR NOT OPERATING.)	 SET "MON. AMPL." SWITCH ON NETWORK CHASSIS IN "OFF" POSITION. (LU-1018 MONITOR UNIT OPERATES ACROSS NETWORK INPUT.)
8. AM-1000 AMPLIFIER-EITHER OF THE TWO IN EACH AM-101 VOLUME CONTROL AMPLIFIER. (NO SOUND.)	 SET INOPERATIVE AMPLIFIER SWITCH IN "OFF" POSITION, AND STANDBY AMPLIFIER IN "ON" POSITION.

IF THE SYSTEM BECOMES INOPERATIVE, FOLLOW THE ABOVE EMERGENCY PROCEDURE TO RESTORE SOUND TEMPORARILY.

Printed in U.S.A. Issue #1 October 3, 1941

ALTEC SERVICE CORPORATION

SIMPLEX

SOUND EQUIPMENT BULLETIN — DRIVE-IN THEATRE SYSTEMS

System	F-250	F-250-X
Power	250 watts	250 watts
Volume Control Amplifier(s)	2 AM-101 (1 AM-1000 each)	2 AM-101-X (2 AM-1000 each)
Driver Amplifier(s)	1 AM-1020	2 AM-1020 (1 Emergency)
Power Amplifier	1 AM-1018 (Altec A-287-WS)	1 AM-1018 (Altec A-287-WS)
Monitor Speaker & Horn	1 LU-1018 - 1 LU-1024	1 LU-1018 - 1 LU-1024
In-A-Car Speaker & Shelter	SK-538 (as required)	SK-538 (as required)
Speaker Control Cabinet	1 LU-3001	1 LU-3001
Power Unit	1 PU-1005	1 PU-1005
Sound Mechanisms	2 SH-1000	2 SH-1000
N.S. Ann. Switching Attachment	1 AM-2069	1 AM-2069
System Switching Panel		1 AM-2013

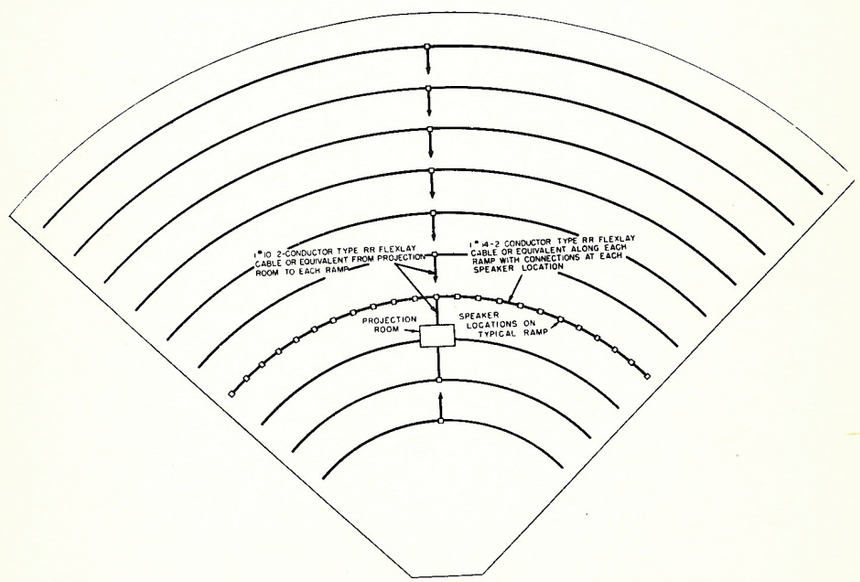

TYPICAL DRIVE-IN THEATRE
WITH POST TYPE SPEAKERS
RAMP WIRING

SK-536

Issued by
Engineering Department
Printed in U. S. A.

Issue #1
December 15, 1946

1. GENERAL

1.1 The XL-101 Single Track Magnetic Sound System consists of the following components:

1 - PU-1012 Power Supply Cabinet
1 - PU-1011 Pre-Amplifier Power Supply
2 - PU-1013 Dummy Loads
2 - SH-1026 Magnetic Soundheads
1 - AM-1066 Pre-Amplifier Cabinet
2 - AM-1065 Pre-Amplifier
1 - AM-1079 Warping Unit
2 - AM-211 Changeover Cabinets
1 - AM-207 System Selector Box

2. INSTALLATION

2.1 Mount and wire equipment in accordance with Fig. 1, Drawing I-2257, Conduit Layout, and Fig. 2, Drawing W-1187, Wiring Diagram.

2.11 SH-1026 Sound Heads - Follow instruction covering SH-1025 Sound Heads, E. B., Series XL-200 Systems, file 40.385, paragraph J, pages 11 and 12.

2.12 AM-211 Changeover Cabinet - Refer to E. B., Series XL-200 Systems, file 40.385, paragraph F, page 8.

2.13 AM-207 System Selector Box - Refer to E. B., Series XL-200 Systems, file 40.385, paragraph H, pages 8-10.

2.14 AM-1066 Pre-Amplifier Cabinet

1. Whenever possible, mount the cabinet on the front wall of the Projection Room between projectors not less than three feet from the projector motors and picture changeovers, and so that it will be convenient for servicing.

2. In some instances, it may be necessary to improvise suitable mounting brackets to clear obstructions.

3. Make connections to the terminal strip per the system wiring diagram.

4. Plug an AM-1065 Pre-Amplifier into each of the two multi-conductor receptacles at left and an AM-1079 Warping Unit into receptacle at the right. (See Figure 1).

2.15 PU-1012 Pre-Amplifier Power Supply Cabinet

1. Mount the cabinet in the selected location and make connections to the terminal strip in accordance with the system wiring diagram.

2. Mount the PU-1011 Power Supply on the back of the cabinet using the mounting screws provided and connect the cable form terminals to the terminal strip in accordance with the system wiring diagram.

3. Plug a PU-1013 Dummy Load into each of the two receptacles on the rear of the cabinet.

4. Strap resistors in each Dummy Load as follows: A-B and B-C.

3. ADJUSTMENTS AND REPLACEMENTS

3.1 SH-1026 MAGNETIC SOUNDHEAD

3.11 Pad Roller Assembly Replacement

a. Open the Pad Roller and compress the actuating spring to relieve the spring tension.

NOTE: Before removing the Lower Pad Roller Assembly, remove the Lower Tension Roller Fastening Screw and the Lower Tension Roller.

b. Remove the Pad Roller Assembly Fastening Screw and the Pad Roller Assembly.

c. Replace parts as necessary, reassemble, and adjust the Pad Roller clearance per the following paragraph.

Issued by
Engineering Department
Printed in U. S. A.

September 3, 1954
Issue #1

3.12 Pad Roller Replacement

a. Open the Pad Roller.

b. Loosen the Pad Roller Stud Set Screw in the Pad Roller Arm Bracket.

c. Remove the Pad Roller Stud and Pad Roller.

d. Replace Parts as necessary and reassemble.

NOTE: Position the Pad Roller Stud so that the Pad Roller rotates freely before tightening the set screw.

e. Adjust the clearance between the Pad Roller and Sprocket as follows:

CAUTION: The Upper and Lower Pad Rollers must be adjusted as described to minimize the possibility of film damage. Under normal operating conditions these pad rollers will not rotate. They should not be adjusted in an attempt to make them rotate.

(1) Thread two thicknesses of film on the sprocket and close the Pad Roller.

(2) Loosen the Pad Roller Arm Adjusting Screw Locknut and position the Pad Roller Arm Adjusting Screw so that the Pad Roller rotates freely.

(3) Tighten the Pad Roller Arm Adjusting Screw Locknut and check the adjustment.

3.13 Sprocket Replacement

a. Open the Pad Rollers.

b. Remove the Sprocket Fastening Screw and the sprocket. Be sure that the spring washer and thrust washer behind the sprocket remain on the stud.

c. Replace parts as necessary and reassemble.

3.14 Upper or Lower Guide Roller Replacement

a. Remove the Guide Roller Fastening Screw and the Guide Roller.

b. Replace parts as necessary and reassemble, making sure that the Guide Roller rotates freely.

3.15 Upper or Lower Tension Roller Replacement

a. Remove the Roller Fastening Screw and the Roller. Be sure that the washers behind the Tension Rollers remain on the stud.

CAUTION: Be careful not to bend the stud. If the stud is bent, the film will be forced against one of the flanges on the upper Stabilizer Drum and flutter will increase.

b. Replace parts as required and reassemble, making sure that the roller rotates freely.

c. Adjust per the following paragraph, if required.

3.16 Upper and Lower Tension Roller Adjustment

a. With film running through the soundhead, the center of the Upper and Lower Tension Rollers should be equi-distant from the center of the Upper and Lower Stabilizer Drum Shafts respectively.

b. Adjust as follows:

(1) Loosen the Tension Roller Adjustment Locking Screw one quarter turn.

(2) Rotate the Tension Roller Adjusting Screw until the Tension Rollers are in proper position and tighten the Tension Roller Adjustment Locking Screw.

3.17 Upper or Lower Stabilizer Drum Replacement

a. Remove the Flywheel Fastening Screw, Washer and the Flywheel on the non-operating side.

b. Remove the Pin, Flat Washer, Spring Washer and Thrust Washer from the shaft.

c. Withdraw the Stabilizer Drum and Shaft from the operating side carefully in view of the ball bearings at both ends of the shaft.

d. Replace parts, as required, and reassemble.

3.18 Magnetic Pickup Head Replacement

a. Disconnect the Cable Connector from the Magnetic Head.

b. Remove the four Magnetic Head Mounting Screws and the shield and head from the bracket.

c. Replace the head, reassemble and adjust per the following paragraph.

3.19 Magnetic Pickup Head Adjustment

NOTE: Magnetic Soundheads are shipped with the Magnetic Pickup Head precisely adjusted. Adjustments should be made at installation only when there is definite evidence that the factory setting has been disturbed. When the Magnetic Pickup Head is replaced, the adjustment procedure below must be followed.

a. Precise adjustment of each Magnetic Pickup Head is essential to obtain maximum uniform output. The gain of the Pre-Amplifier associated with each machine must be adjusted so that the level as measured at the output of the power amplifier is the same for each machine.

b. The following sequence of adjustments is recommended with the two-position switch in the Magnetic Soundhead set on SINGLE TRACK.

(1) Make the visual preliminary lateral adjustment per paragraph "c" below.

(2) Make the pressure adjustment per paragraph "d" below.

(3) Adjust the gain of each AM-1065 Pre-Amplifier per paragraph "c" below.

(4) Complete the lateral and azimuth adjustments per paragraphs "e", "f" and "g" below.

c. Visual Preliminary Lateral Adjustment

(1) Thread a magnetic sound sound film in the soundhead.

(2) Loosen the Lateral Adjustment Locking Screw and turn the Lateral Adjusting Screw until track #1 on the film and on the magnetic pickup head are in alignment visually.

(3) Tighten the Lateral Adjustment Locking Screw.

d. Pressure Adjustment

(1) Thread a 1 KC (4-track level balance) test film in the soundhead.

NOTE: This film loop is threaded in the normal manner except that it is routed over (instead of under) the Upper Guide Roller and around the Upper Feed Sprocket in the Projector Mechanism.

(2) Turn the motor manually, check the running of the film and turn the motor switch ON.

(3) Loosen the Pressure Adjustment Locking Screw approximately one-half turn.

(4) Rotate the Pressure Adjusting Screw so that the film runs smoothly off the Upper Stabilizer Drum without any tendency to ride up on either of the flanges.

(5) Tighten the Pressure Adjustment Locking Screw.

e. Final Lateral Adjustment

(1) Terminate the output of the power amplifier in a matching resistive load.

(2) Connect an AC voltmeter (1,000 ohms/volt sensitivity or better) across the output of the power amplifier.

(3) With the 1 KC film loop running in each machine successively, loosen the Lateral Adjustment Locking Screw.

(4) Turn the Lateral Adjusting Screw to obtain the maximum voltage reading on the AC voltmeter.

f. The Lateral and Pressure Adjustments are interacting. Paragraphs "d" and "e" should be repeated until voltage readings for both machines are a maximum.

g. Azimuth Adjustment.

NOTE: The two-position switch should still be on SINGLE TRACK, the power amplifier terminated and the AC voltmeter connected as before.

(1) Thread an 8 KC azimuth test film, in each machine successively, in the same manner as the 1 KC test film.

(2) With the film running, loosen the Azimuth Adjustment Locking Screw approximately one-half turn.

(3) Turn the Azimuth Adjusting Screw to obtain the maximum voltage reading.

(4) Tighten the Azimuth Adjustment Locking Screw.

3.2 AM-1065 PRE-AMPLIFIER

3.21 The gain of the Pre-Amplifier, associated with each machine, is adjusted in conjunction with the magnetic Pickup Head adjustments, described in paragraph 3.19, so that each machine output as measured at the output of the power amplifier is the same.

3.22 Initially set each Pre-Amplifier gain control, R-10, in mid-position.

3.23 Adjust the R-10, as required, when the lateral and azimuth adjustments of the Magnetic Pickup Head are made so that the output of each machine is the same.

3.3 AM-211 CHANGEOVER CABINET

3.31 Changeover Switch Removal

a. Depress the Changeover Button and rotate so that the set screw is accessible inside the cabinet.

b. Loosen the Set Screw and slide the button from the switch shaft. Retain the spring.

c. Through the hole in the Cabinet Cover, remove the Changeover Switch Fastening Nut.

d. Remove the Switch from the Bracket and disconnect the wires.

e. Reconnect the wires to the replacing Switch.

3.4 PU-1011 PRE-AMPLIFIER POWER SUPPLY

3.41 Power Transformer Strapping

a. At T1, the green wire should be connected in accordance with the following table for the average line voltage during operating hours.

Average Line Voltage	Connect to T3 Tap
120-130	125 Volt
110-120	115 Volt (Connection as shipped)
100-110	105 Volt

NOTE: Average line voltage is the average of the voltage readings taken during operating hours. If the average line voltage is above or below the above limits, the cooperation of the Power Company should be requested to bring the voltage within the recommended 105-125 volt limits.

3.42 Heater Supply Adjustment

a. With all Pre-Amplifiers operating, connect a 20,000 ohm/volt voltmeter across terminals "-19V DC" and "+19V DC" and adjust R4 until the reading is exactly 19 volts DC.

3.43 Replacement

a. Disconnect each of the cable form wires from the terminal strip.

b. Remove the four Power Supply Fastening Screws and the Power Supply.

c. Install the replacing unit and reconnect the wires.

3.5 AM-1079 WARPING UNIT - (Refer to Drawing SK-951).

3.51 Balance and Warping Adjustments

a. Adjust the system gain so that under normal operating conditions the volume control in the AM-207 System Selector Box is in about mid-position.

3.52 Make careful listening tests throughout the auditorium and adjust the frequency response, as required, to obtain the highest quality sound in the auditorium.

ASSOCIATED DRAWINGS

Schematic	Wiring Diagram		
W-1145	W-1147	AM-207	System Selector Box
W-1172	W-1171	AM-211	Four Channel Changeover Cabinet
W-1150	W-1155	AM-1065	Pre-Amplifier
	G-2401	AM-1066	Pre-Amplifier Cabinet
	AM-1079	AM-1079	Warping Unit
	SK-951	Balance and Warping Adjustments	
	I-2257	System Conduit Layout	
	W-1187	System Wiring Diagram	
W-1153	W-1152	PU-1011	Pre-Amplifier Power Supply
	G-2386	PU-1012	Pre-Amplifier Power Supply Cabinet

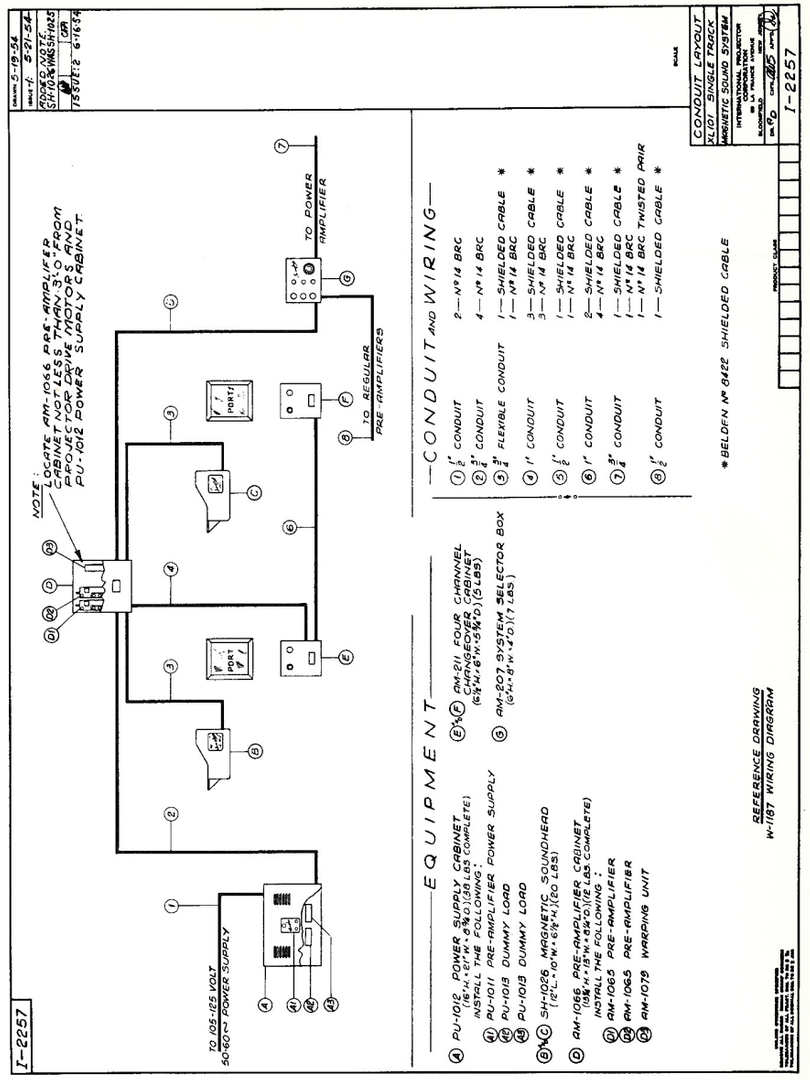

FIGURE 1
XL101 SINGLE CHANNEL
MAGNETIC SOUND SYSTEM
CONDUIT LAYOUT

Issued by
Engineering Department
Printed in U.S.A.

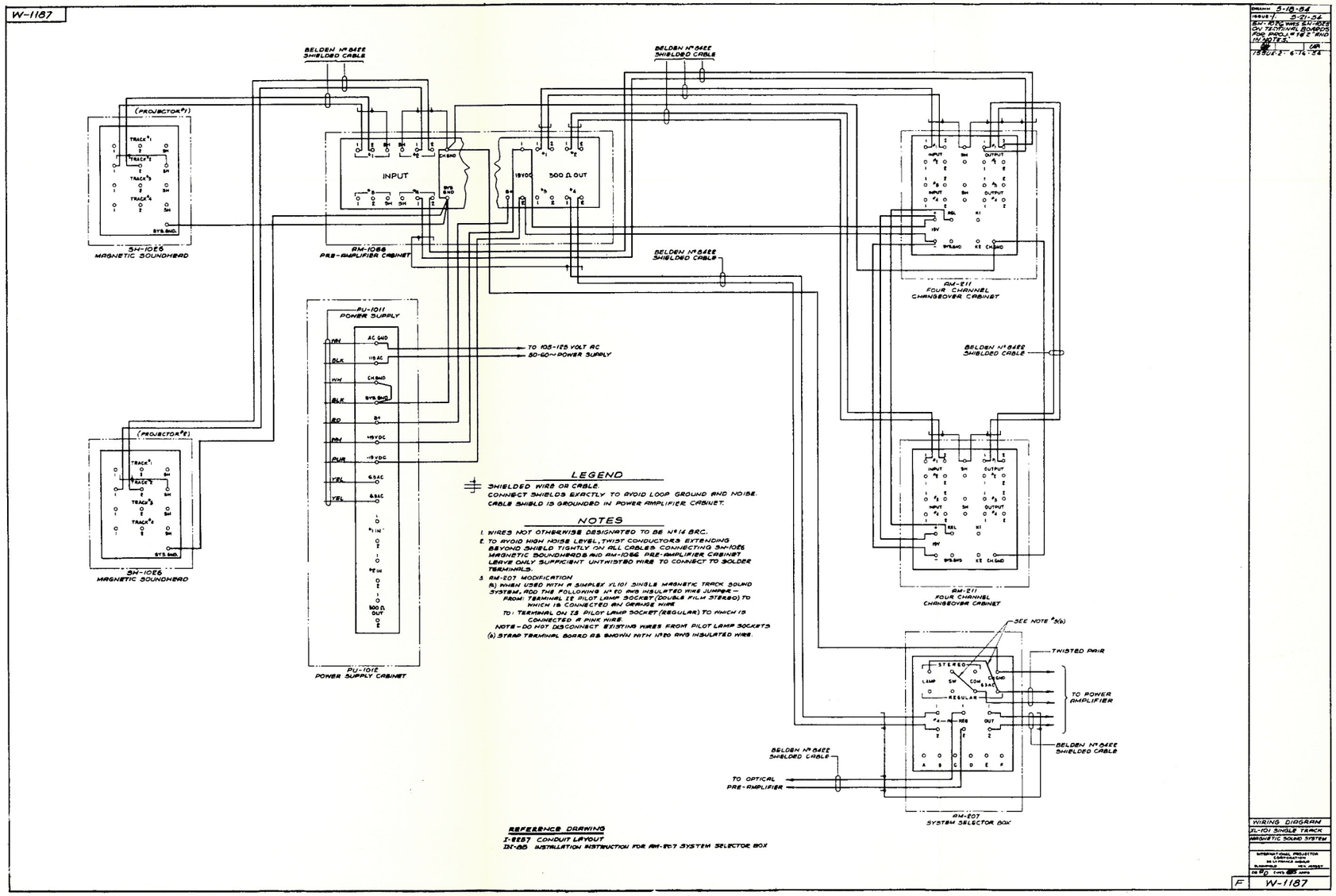

Issued by
Engineering Department
Printed in U.S.A.

FIGURE 2
XL101 SINGLE CHANNEL
MAGNETIC SOUND SYSTEM
WIRING DIAGRAM

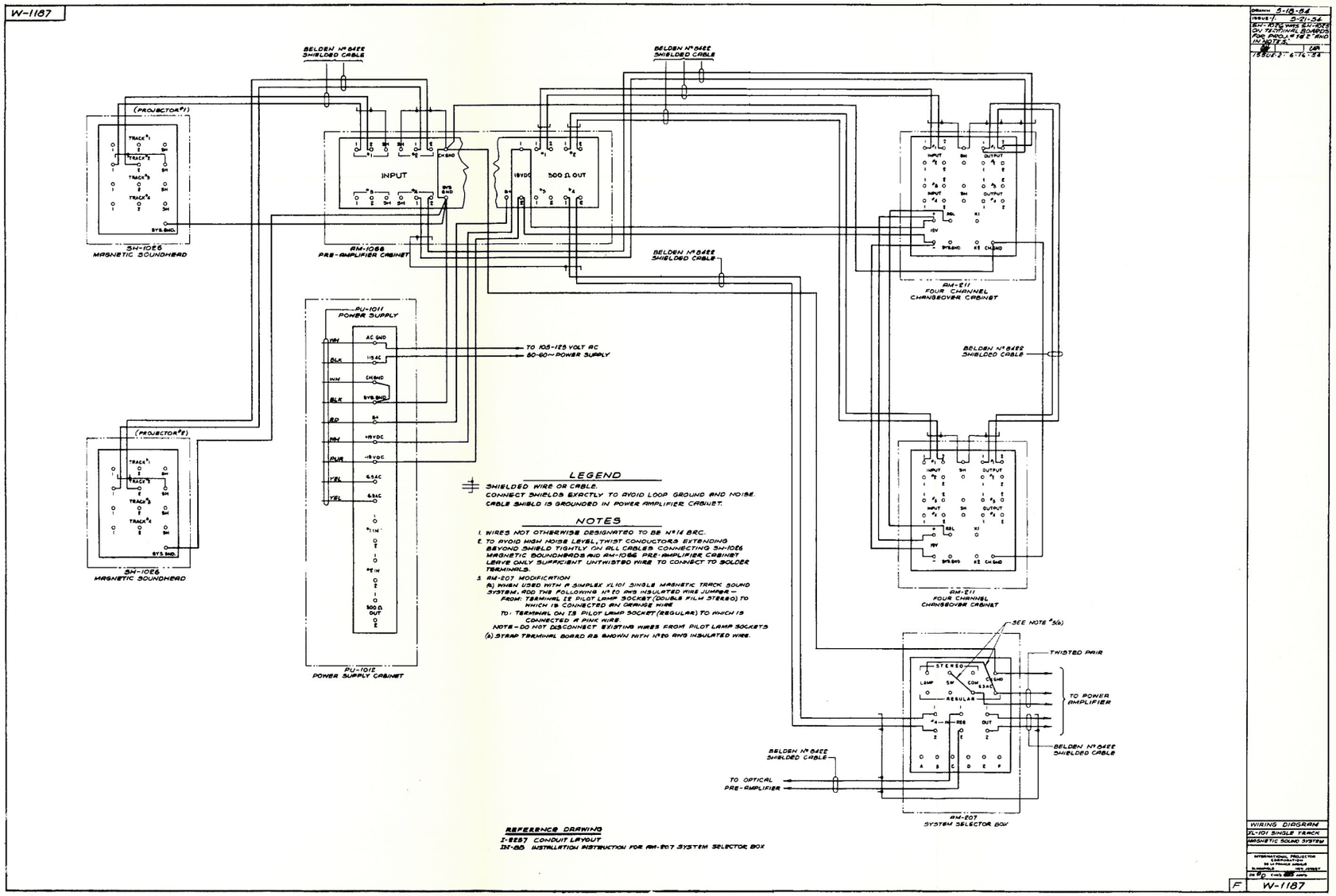

Issued by
Engineering Department
Printed in U.S.A.

FIGURE 2
XL101 SINGLE CHANNEL
MAGNETIC SOUND SYSTEM
WIRING DIAGRAM

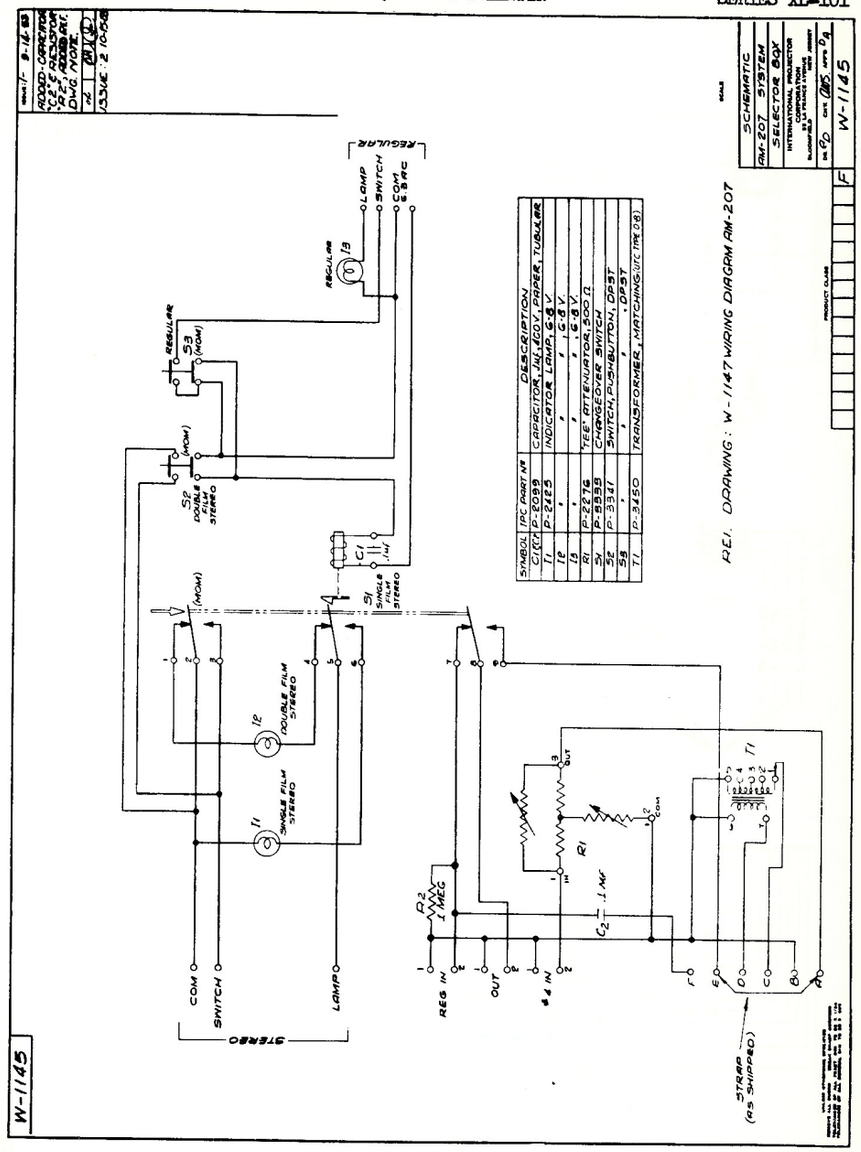

SYMBOL	TPC PART Nº	DESCRIPTION
C1,C2	P-2099	CAPACITOR, .1MF, 400V, PAPER, TUBULAR
I1	P-2185	INDICATOR LAMP, 6.8 V.
I2	"	" " 6.8 V.
I3	"	" " 6.8 V.
R1	P-2276	"T" ATTENUATOR, 500 Ω
S2	P-2278	CHANGEOVER SWITCH, DPDT
S3	P-3341	SWITCH, PUSHBUTTON, DPST
S1	"	" " DPST
T1	P-3450	TRANSFORMER, MATCHING (UTC TYPE OB)

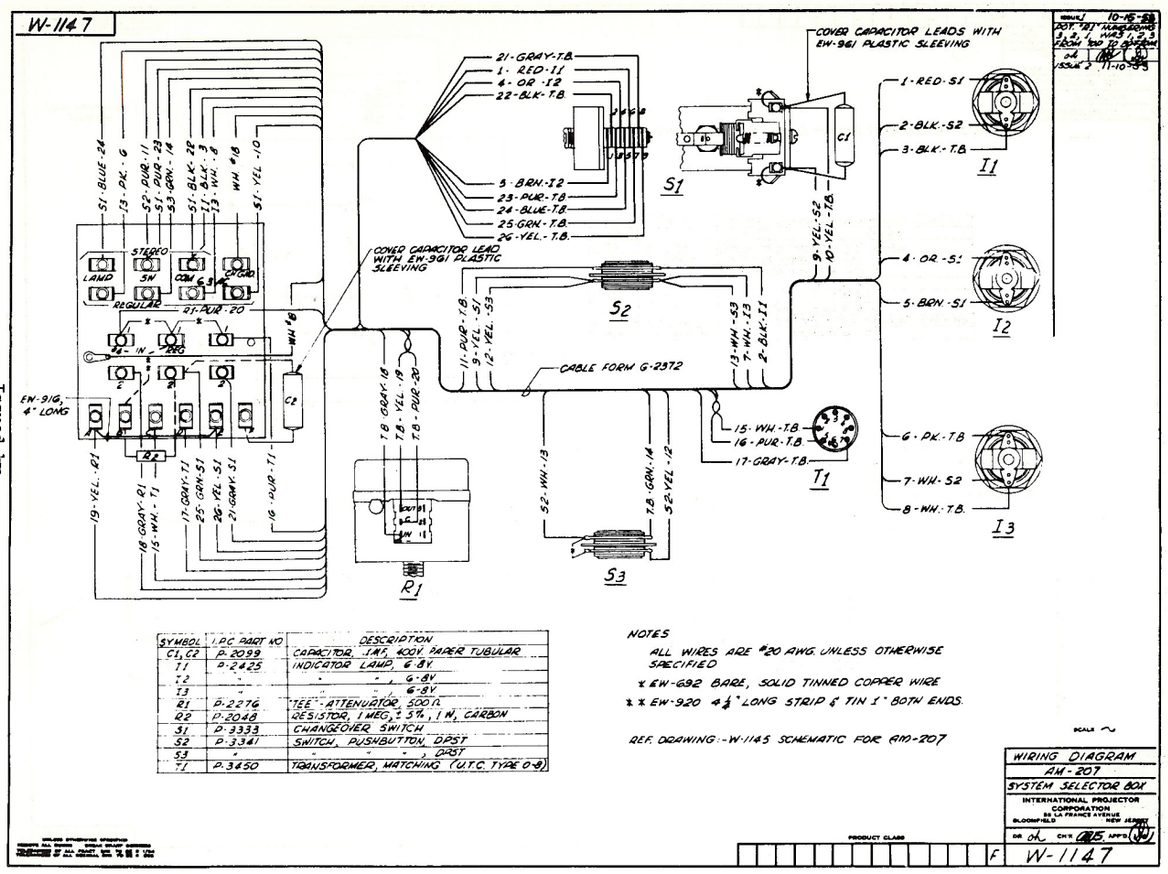

SYMBOL	I.P.C. PART NO	DESCRIPTION
C1, C2	P-2099	CAPACITOR, .1 MF, 400V, PAPER TUBULAR
I1	P-2425	INDICATOR LAMP, 6-8V.
I2	"	" " 6-8V
I3	"	" " 6-8V
R1	P-2276	TEE-ATTENUATOR, 500Ω
R2	P-2048	RESISTOR, 1 MEG, ± 5%, 1 W, CARBON
S1	P-3333	CHANGEOVER SWITCH
S2	P-3341	SWITCH, PUSHBUTTON, DPST
S3	"	" " DPST
T1	P-3450	TRANSFORMER, MATCHING (U.T.C. TYPE O-8)

NOTES
ALL WIRES ARE #20 AWG. UNLESS OTHERWISE SPECIFIED
* EW-692 BARE, SOLID TINNED COPPER WIRE
** EW-920 4½" LONG STRIP & TIN 1" BOTH ENDS.

REF. DRAWING:-W-1145 SCHEMATIC FOR RM-207

WIRING DIAGRAM
AM-207
SYSTEM SELECTOR BOX
INTERNATIONAL PROJECTOR CORPORATION
W-1147

Issued by
Engineering Department
Printed in U.S.A.

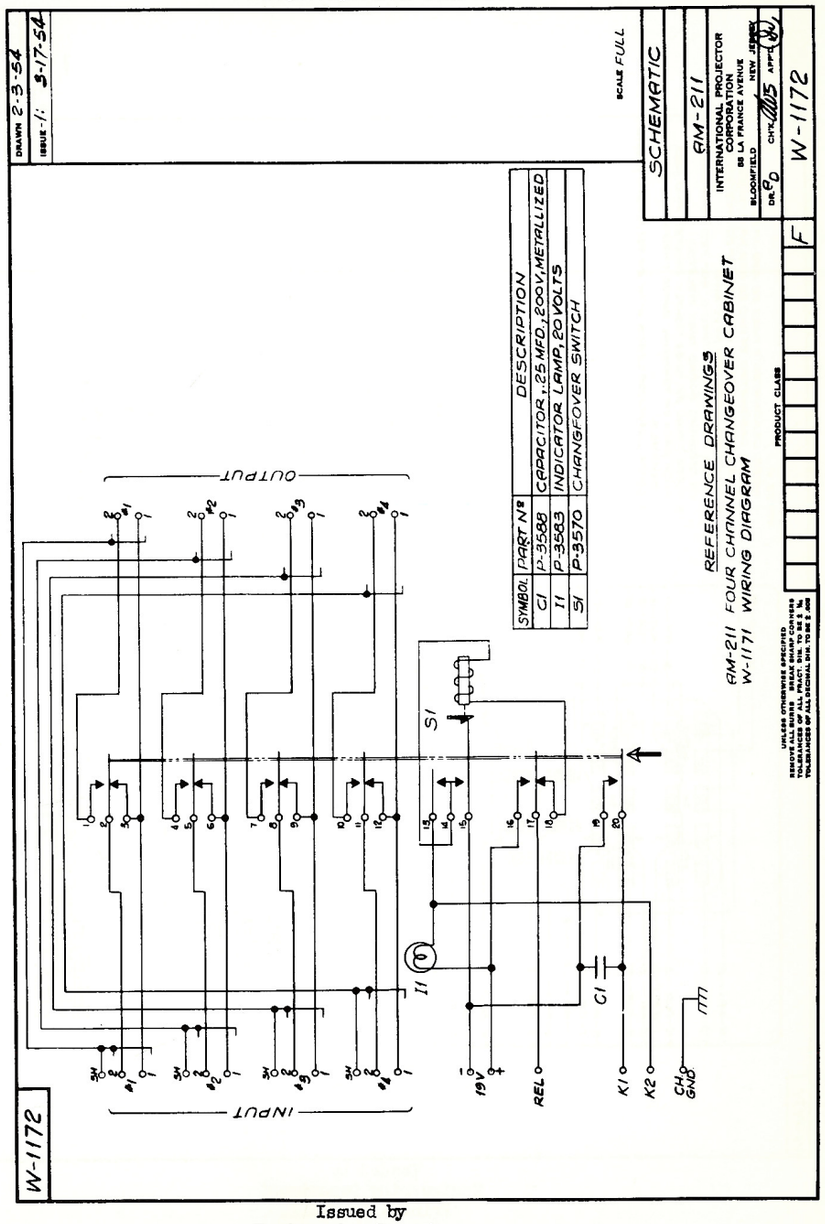

Issued by
Engineering Departmen
Printed in U.S.A.

W-1171

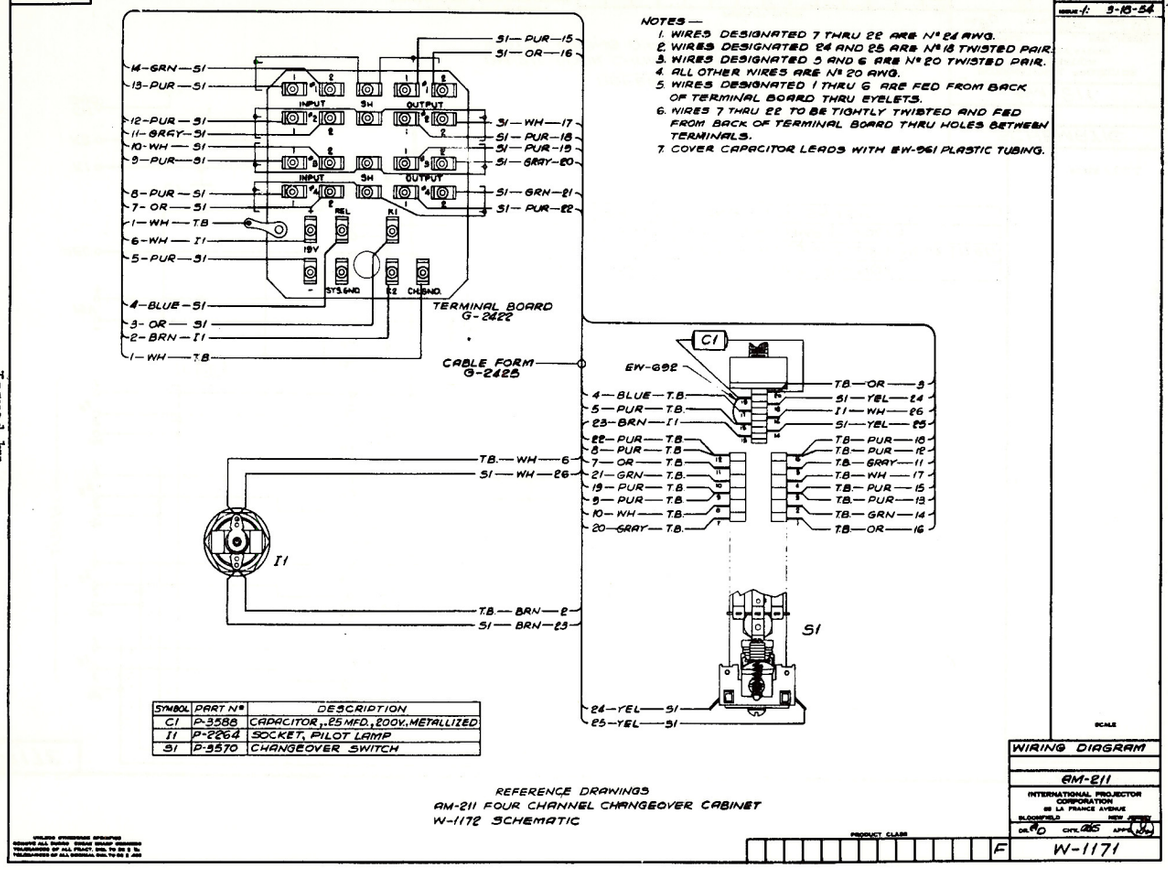

SYMBOL	PART Nº	DESCRIPTION
C1	P-3588	CAPACITOR, .25 MFD., 200V., METALLIZED
I1	P-2264	SOCKET, PILOT LAMP
S1	P-3570	CHANGEOVER SWITCH

REFERENCE DRAWINGS
AM-211 FOUR CHANNEL CHANGEOVER CABINET
W-1172 SCHEMATIC

DRAWN 5-11-54
ISSUED 5-18-54
SCALE
WIRING DIAGRAM
AM-211
INTERNATIONAL PROJECTOR CORPORATION
60 LA FRANCE AVENUE
BLOOMFIELD NEW JERSEY
DR. CHK. APP.
PRODUCT CLASS F
W-1171

Issued by
Engineering Department
Printed in U.S.A.

W-1150

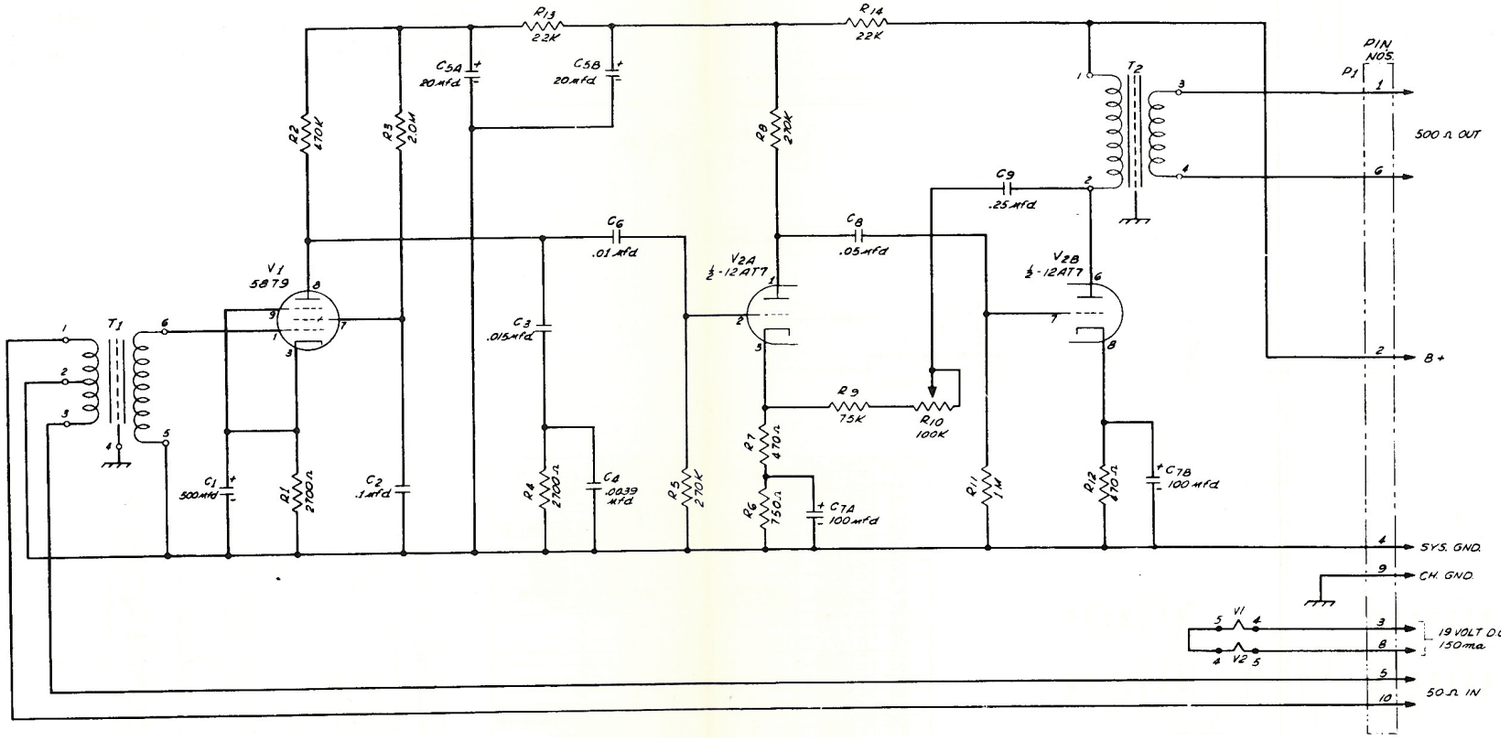

SYMBOL	I.P.C. PART NO.	DESCRIPTION
R1	P-2127	RESISTOR, 2700Ω, 1 W, CARBON
R2	P-2046	" , 470K, 1W, "
R3	P-2074	" , 2.0M, 1W, "
R4	P-2127	" , 2700Ω, 1W, "
R5	P-2055	" , 270K, 1W, "
R6	P-1004	" , 750Ω, 1W, "
R7	P-2075	" , 470Ω, 1W, "
R8	P-2055	" , 270K, 1W, "
R9	P-1013	" , 75K, 1W, "
R10	P-1076	" , 100K, 2W, POTENTIOMETER
R11	P-2048	" , 1M, 1W, CARBON

SYMBOL	I.P.C. PART NO.	DESCRIPTION
R12	P-2075	RESISTOR, 470Ω, 1W, CARBON
R13	P-2126	" 22K, 1W, "
R14	P-2126	" 22K, 1W, "
C1	P-3415	CAPACITOR, 500 mfd, 6V DCW, ELECTROLYTIC
C2	P-2099	" .1 mfd, 400V, PAPER
C3	P-3417	" .015 mfd, 300V, MICA
C4	P-3420	" .0039 mfd, 500V, MICA
C5A	P-3416	" 20/20 mfd, 450V DCW, ELECTROLYTIC
C5B		
C6	P-3421	" .01 mfd, 500V MICA

SYMBOL	I.P.C. PART NO.	DESCRIPTION
C7A	P-3418	CAPACITOR, 100/100 mfd, 10V DCW, ELECTROLYTIC
C7B		
C8	P-3422	" .05 mfd, 400V, PAPER
C9	P-3419	" .25 mfd, 600V, METALIZED
T1	P-3427	TRANSFORMER, INPUT
T2	P-3428	TRANSFORMER, OUTPUT
P1	P-2063	MALE PANEL CONNECTOR - 10 PRONG
V1	P-3423	VACUUM TUBE, 5879
V2A	P-3424	" " , 12AT7
V2B		

ASSOCIATED DWGS
AM-1065 - ASSEMBLY
W-1155 - WIRING DIAGRAM

DRAWN 10-5-53
ISSUED 11-11-53

SCALE ~

SCHEMATIC
DRE-AMPLIFIER
AM-1065
INTERNATIONAL PROJECTOR CORPORATION
W-1150

ALTEC SERVICE CORPORATION
SIMPLEX
SOUND EQUIPMENT BULLETIN

W-1155

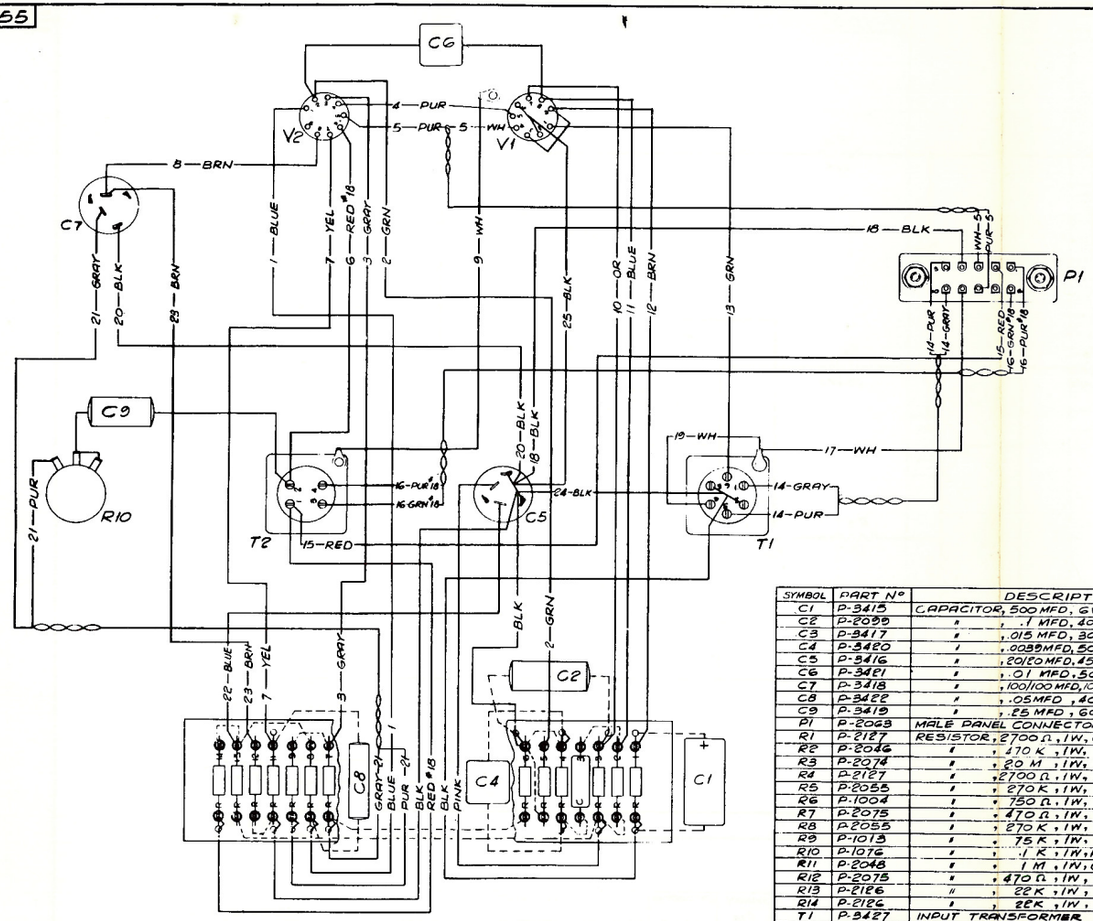

SUGGESTED METHOD FOR WIRING

1. SOLDER WIRES TO P1 (MALE PANEL CONNECTOR) BEFORE ASSEMBLY OF PLUG TO CHASSIS
2. MOUNT CAPACITOR C9.
3. SOLDER WIRES BETWEEN COMPONENTS ON CHASSIS.
4. SOLDER WIRES AND CAPACITOR C6 TO TUBE SOCKETS V1 AND V2 BEFORE ASSY OF SUPPORT TO CHASSIS.
5. MOUNT SUPPORT TO CHASSIS AND SOLDER WIRES TO COMPONENTS ON CHASSIS.
6. SECURE MOUNTING STRIP TO CHASSIS AND SOLDER WIRES BETWEEN COMPONENTS ON CHASSIS AND MOUNTING STRIP.
7. MAINTAIN TWIST IN WIRE AS CLOSE AS POSSIBLE TO TERMINALS

DRAWN 10-27-53
ISSUE 1 11-6-53

SYMBOL	PART Nº	DESCRIPTION
C1	P-3415	CAPACITOR, 500 MFD., 6V., ELECTROLYTIC
C2	P-2099	" .1 MFD., 400V., PAPER
C3	P-3417	" .015 MFD., 300V., MICA
C4	P-3420	" .0035 MFD., 500V., "
C5	P-3416	" .20/20 MFD., 450V., ELECTROLYTIC
C6	P-3421	" .01 MFD., 500V., MICA
C7	P-3418	" 100/100 MFD., 10V., ELECTROLYTIC
C8	P-3422	" .05 MFD., 400V., PAPER
C9	P-3419	" .25 MFD., 600V., PAPER
P1	P-2088	MALE PANEL CONNECTOR-10 PRONG
R1	P-2127	RESISTOR, 27.00 Ω., 1W., CARBON
R2	P-2046	" .470 K., 1W., "
R3	P-2074	" .20 M., 1W., "
R4	P-2127	" 27.00 Ω., 1W., "
R5	P-2055	" .270 K., 1W., "
R6	P-1004	" .750 Ω., 1W., "
R7	P-2075	" .470 Ω., 1W., "
R8	P-2055	" .270 K., 1W., "
R9	P-1013	" .75 K., 1W., "
R10	P-1076	" .1 K., 1W., POTENTIOMETER
R11	P-2048	" 1 M., 1W., CARBON
R12	P-2075	" .470 Ω., 1W., "
R13	P-2126	" 22 K., 1W., "
R14	P-2126	" 22 K., 1W., "
T1	P-3427	INPUT TRANSFORMER
T2	P-3428	OUTPUT TRANSFORMER
V1	P-3423	VACUUM TUBE 5879
V2	P-3424	" " 12AT7

WIRE #	FROM	TO	LENGTH	COLOR	PART #
1	V2	R8	4 3/4	BLUE	EW-912
2	V2	R5	2 3/4	GREEN	-917
3	V2	R7	2 1/4	GRAY	-909
4	V2	V1	1 3/4	PUR	-908
5	V2+V1	P1	7 1/2	PUR WH TW	-1009
6	V2	T2	2	RED	-953
7	V2	R11	2 3/4	YEL	-916
8	V2	C7	2 3/4	BRN	-913
9	V1 GND	T2 GND	1 1/2	WH	-919
10	V1	R3	2 1/4	OR	-956
11	V1	R2	2 1/2	BLUE	-918
12	V1	R1	2 1/4	BRN	-913
13	V1	T1	1 1/2	GRN	-917
P5	V1	C6	2 3/4	BLK	-920
14	P1	T1	2 3/4	PUR GRAY TW	-954
15	P1	T2	8	RED	-957
16	P1	T2	7 1/2	PUR GRN TW	-948
17	P1	T1 GND	4 1/2	WH	-919
18	P1	C6	6 3/4	BLK	-920
19	T1	T1 GND	3	WH	-919
20	C5	C7	6 3/4	BLK	-920
21	C7	R7	7	GRAY TW PUR	-944
22	C5	R13	6 1/2	BLUE	-954
23	C7	R12	2 1/4	BRN	-913
24	C5	T1	2 1/4	BLK	-920

SEE NOTE 7

REFERENCE DWGS
W-1150 SCHEMATIC
AM-1065 PRE-AMPLIFIER

NOTE
1. STRAPS ARE EW-692 SOLID, TINNED COPPER WIRE.
2. COVER STRAP AT "V1" BETWEEN PINS 3 AND 5, AND CAPACITOR LEADS WITH EW-961 BLACK PLASTIC SLEEVING.
3. WIRES ARE Nº 20 AWG, UNLESS OTHERWISE SPECIFIED.

SCALE

WIRING DIAGRAM
AM-1065 PRE-AMPLIFIER
INTERNATIONAL PROJECTOR CORPORATION
96 LA FRANCE AVENUE
BLOOMFIELD NEW JERSEY
DR. PD CHK. MW APP'D.

UNLESS OTHERWISE SPECIFIED
REMOVE ALL BURRS BREAK SHARP EDGES
TOLERANCES OF ALL FRACT. DIM. TO BE ± 1/64
TOLERANCES OF ALL DECIMAL DIM. TO BE ± .010

PRODUCT CLASS F

W-1155

Issued by
Engineering Department
Printed in U.S.A.

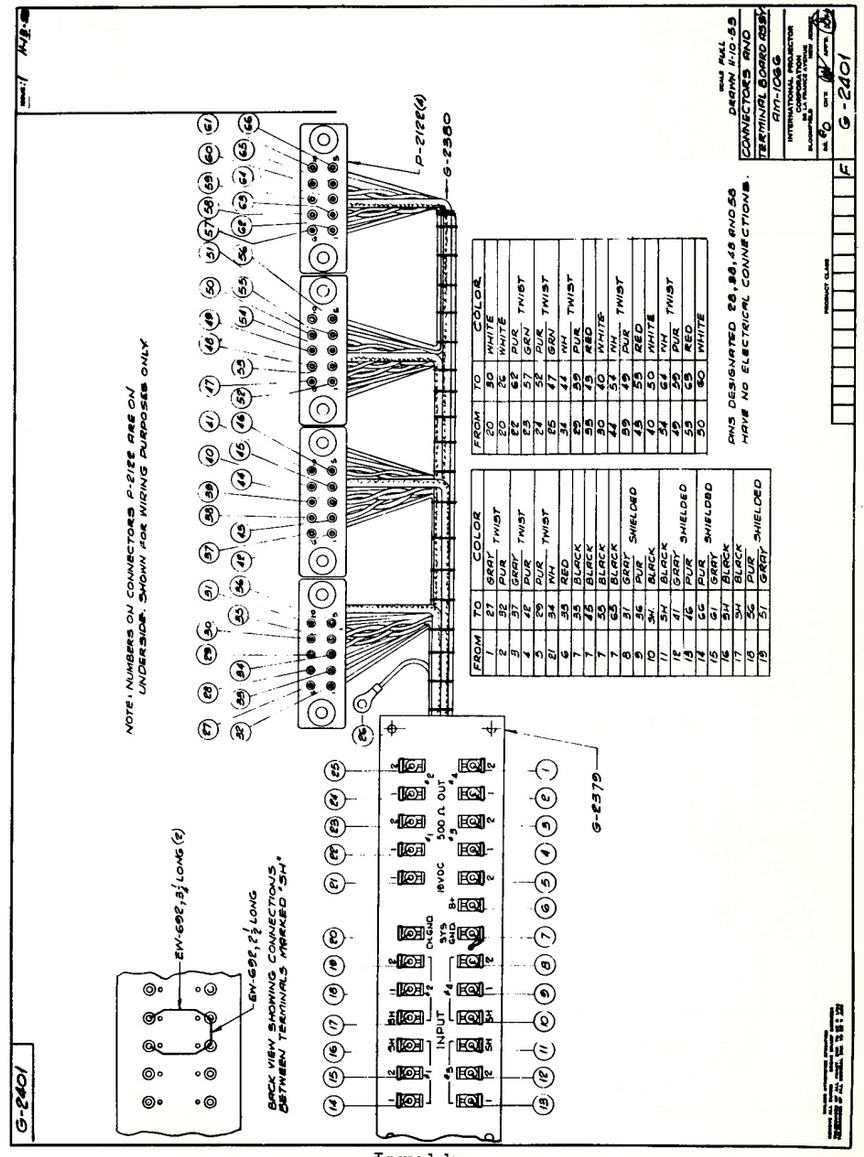

Issued by
Engineering Department
Printed in U.S.A.

ALTEC SERVICE CORPORATION
SIMPLEX
SOUND EQUIPMENT BULLETIN

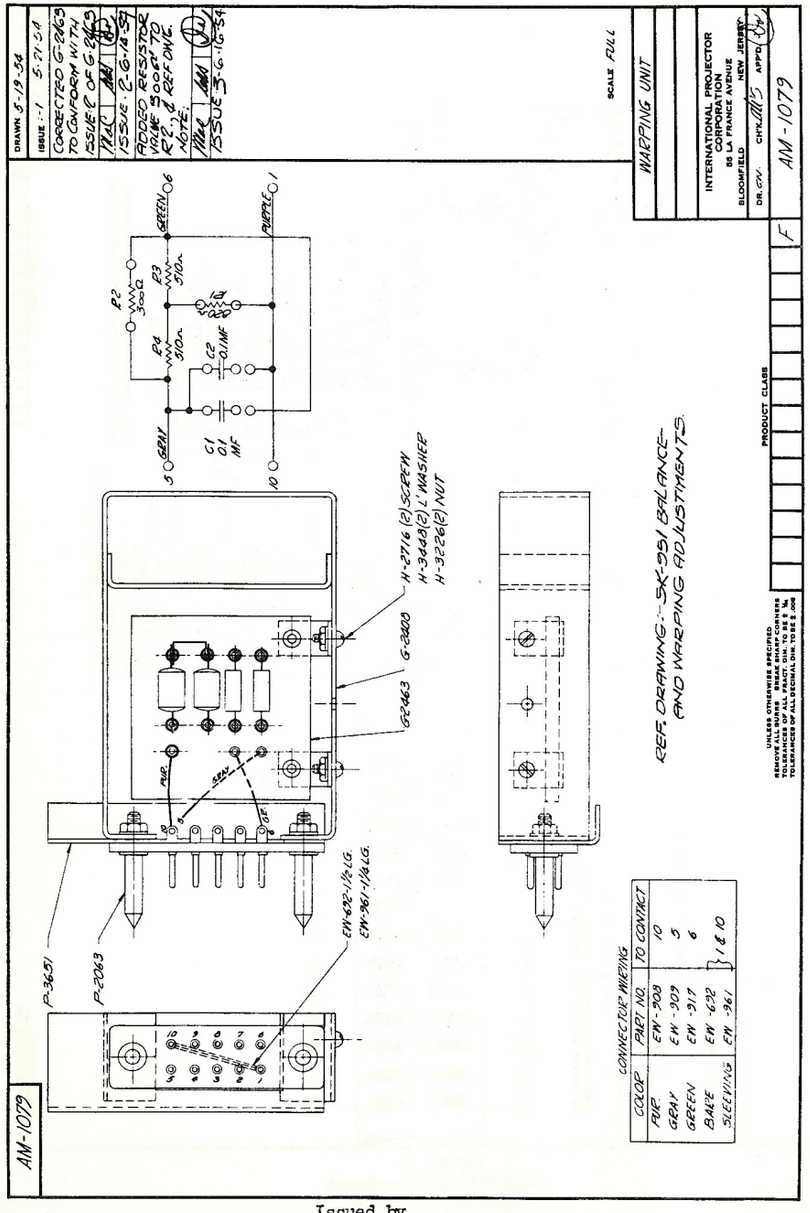

Issued by
Engineering Department
Printed in U.S.A.

SK-951

ISSUE:-1 3-27-54

SYSTEM GAIN & LEVEL BALANCE ADJUSTMENT

SYS. GAIN-db	RESISTANCE IN OHMS R-1,6,11,16,21 & 26	R-2,7,12,17,22 & 27
0	OPEN	0
−2	2000	130
−4 (a)	820	300
−6	510	510
−8	330 (b)	750 (b)
−10	240	1000
−12	160 (b)	1500 (b)

NOTES:- (a) AS SHIPPED.
(b) RESISTORS SUPPLIED IN KIT G-2442 SHIPPED WITH AM-212.

HIGH FREQUENCY WARPING & BALANCE ADJUSTMENT

SYS. GAIN ADJ.	C-1,3,5, 7,9 & 11	C-2,4,6, 8,10 & 12	STRAP AS PER FIG.	RELATIVE RESPONSE - 1000 CYCLES 0db REFERENCE CYCLES PER SECOND 2000	3000	4000	5000	6000	7000	8000
	OPEN	OPEN	1 (a)	0	0	0	0	0	0	+.5
	OPEN	0.1	2	0	−1	−1.5	−2	−2.6	−3.2	−3.8
	OPEN	0.15	2	−.5	−2	−3.2	−4	−4.5	−5.4	−6.2
	0.1	0.1	3	−1.5	−3	−4.2	−5.5	−6.6	−7.5	−8.4
	0.15	0.15	3	−2.5	−4.3	−6.0	−8.0	−9.3	−10.5	−11.6
−4	0.1	OPEN	4	+.5	+.7	+.9	+1.2	+1.5	+1.7	+2.0
−8	0.15	0.1	5	+.5	+.7	+.9	+1.2	+1.5	+1.7	+2.0
−8	0.1	OPEN	4	+1.0	+1.7	+2.5	+3.0	+3.5	+4.0	+4.3
−8	0.1	0.1	6	+2.0	+2.7	+3.4	+4.0	+4.4	+4.8	+5.2
−12	0.1	0.15	5	+.7	+1.0	+1.3	+1.5	+1.8	+2.1	+2.4
−12	0.1	0.1	5	+.9	+1.5	+2.4	+2.9	+3.3	+3.7	+4.0
−12	0.1	OPEN	4	+2.1	+2.9	+3.7	+4.4	+5.1	+5.7	+6.5

NOTES: (a) RESPONSE AS SHIPPED.
(b) TYPICAL RESPONSE, TOLERANCE ± 1db SIGNAL SOURCE - OSCILLATOR WITH 500 OHMS IN SERIES.

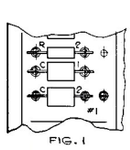
FIG. 1

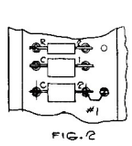
FIG. 2

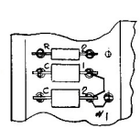
FIG. 3

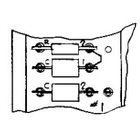
FIG. 4

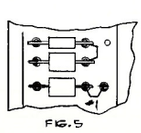
FIG. 5

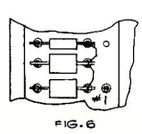
FIG. 6

TYPICAL STRAPPING - ONLY CHANNEL #1 - PROJECTOR #1 SHOWN.

SCALE

AM-212 BALANCE
& WARPING CABINET
ADJUSTMENTS

INTERNATIONAL PROJECTOR CORPORATION
25 LA FRANCE AVENUE
BLOOMFIELD NEW JERSEY

DR. MA CHK. APP'D

SK-951

PRODUCT CLASS

UNLESS OTHERWISE SPECIFIED
REMOVE ALL BURRS BREAK SHARP CORNERS
TOLERANCES OF ALL FRACT. DIM. TO BE ± 1/64
TOLERANCES OF ALL DECIMAL DIM. TO BE ± .005

Issued by
Engineering Department
Printed in U.S.A.

W-1153

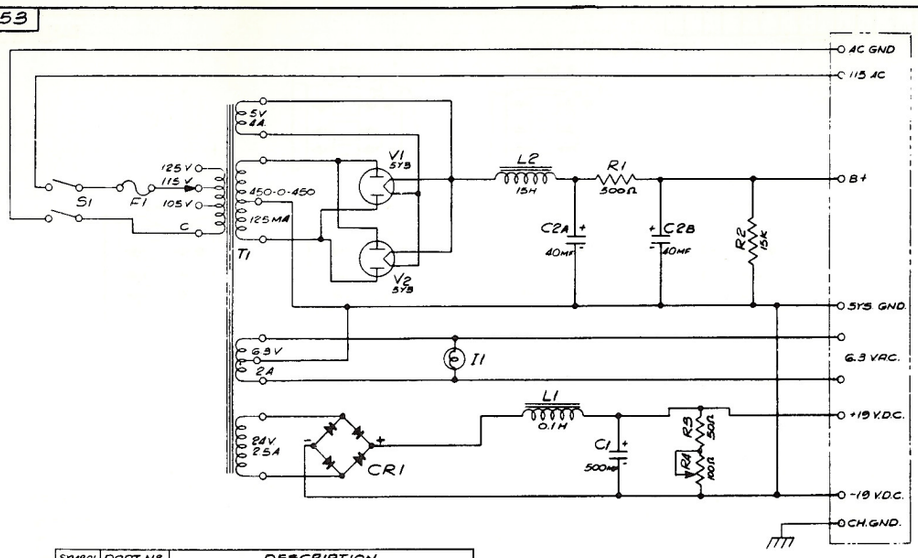

SYMBOL	PART N°	DESCRIPTION
C1	P-3488	CAPACITOR, 500 MF, 25 V, ELECTROLYTIC
C2	P-2084	" ,40-40 MF, 450 V, "
CR1	P-3504	SELENIUM RECTIFIER
F1	P-2592	FUSETRON, 1 AMP
I1	P-2825	LAMP, G-8 V.
L1	P-3486	REACTOR, FILTER - 0.1 H
L2	P-3485	" " " - 15 H
R1	P-3487	RESISTOR, 500 OHMS, 25 W. WIREWOUND
R2	P-3488	" ,15 K OHMS, 25 W. "
R3	P-3529	" 50 OHMS, 25 W. "
S1	P-2099	SWITCH, TOGGLE DPST
T1	P-3484	TRANSFORMER, POWER
V1	P-2130	VACUUM TUBE, 5Y3GT
V2	P-2130	" " ,5Y3GT
R4	P-3024	RESISTOR, 100 OHMS, 25 W. ADJUSTABLE

REFERENCE DRAWINGS
W-1152 WIRING DIAGRAM
PU-1011 POWER SUPPLY

ISSUE: 1- 11-19-58
ISSUE: 2- N°23-62

SCALE
DRAWN 10-21-58
SCHEMATIC
PU-1011 POWER SUPPLY

INTERNATIONAL PROJECTOR CORPORATION
BLOOMFIELD, NEW JERSEY
DR. PD CH'K APP'D

PRODUCT CLASS F W-1153

Issued by
Engineering Department
Printed in U.S.A.

ALTEC SERVICE CORPORATION
SIMPLEX
SOUND EQUIPMENT BULLETIN

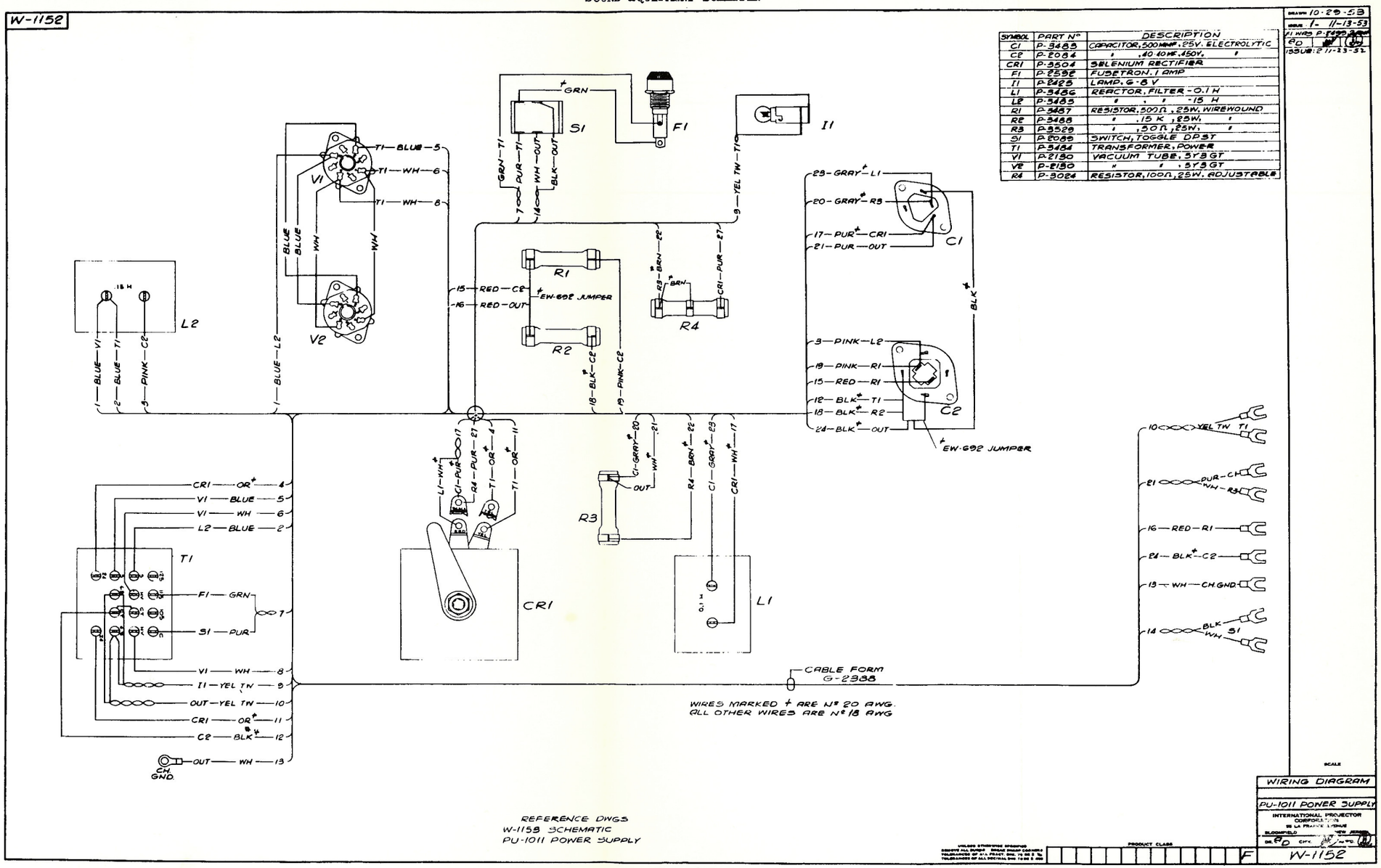

Issued by
Engineering Department
Printed in U.S.A.

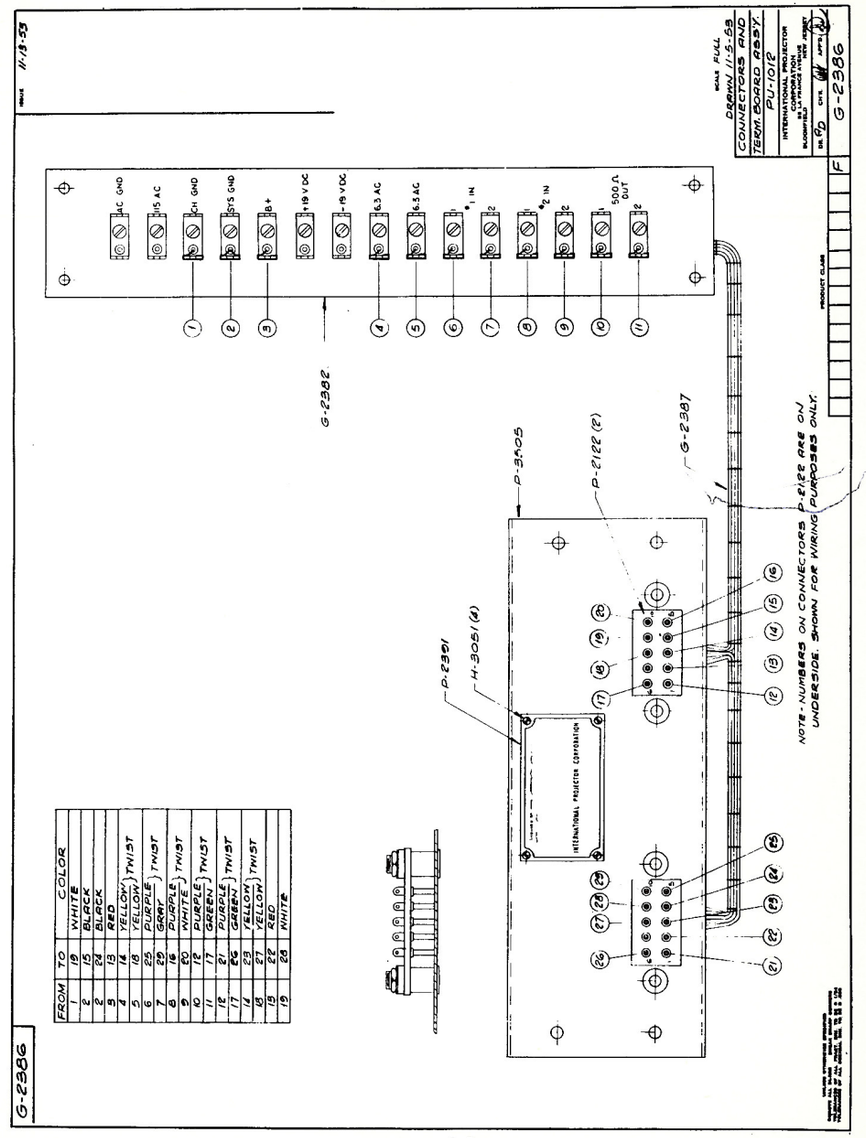

FROM	TO	COLOR
1	19	WHITE
2	15	BLACK
3	24	BLACK
4	13	RED
5	14	YELLOW } TWIST
6	18	PURPLE } TWIST
7	25	GREEN } TWIST
8	26	PURPLE } TWIST
9	16	WHITE } TWIST
10	20	PURPLE } TWIST
11	12	GREEN } TWIST
12	17	PURPLE } TWIST
17	21	GREEN } TWIST
14	26	YELLOW } TWIST
15	29	YELLOW } TWIST
16	27	RED
19	28	WHITE

Issued by
Engineering Department
Printed in U.S.A.

SIMPLEX THREE CHANNEL MAGNETIC STEREOPHONIC / OPTICAL SOUND SYSTEM
(EQUIPMENT REQUIREMENTS FOR CONVERSION OF AN EXISTING XL OPTICAL SOUND SYSTEM TO AN XL 500 3 CHANNEL STEREOPHONIC SYSTEM)

COMPONENT NUMBER	DESCRIPTION	XL2-11 TO 532-311	XL2-12 TO 532-312	XL4-12 TO 532-312	XL4-22 TO 532-322	XL6-12 TO 536-312	XL6-22 TO 536-322	XL6-24 TO 536-324
		← SPECIFY XL-500 SYSTEM REQUIRED →						
		← LESS THE FOLLOWING COMPONENTS →						
AM-1027	POWER AMPLIFIER	1	1	2	2	–	–	–
AM-1026	" "	–	–	–	–	1	1	1
LU-143	STAGE SPEAKER EQUIP.	1	–	–	–	–	–	–
LU-144	" " "	–	1	1	–	1	–	–
LU-145	" " "	–	–	–	1	–	1	–
LU-146	" " "	–	–	–	–	–	–	1
AM-1028	PRE-AMPLIFIER	1	1	1	1	1	1	1
AM-1031	SYSTEM CABINET (4 PLACE)	1	1	1	1	1	1	1
AM-1054	MONITOR AMP. & CONTROL PANEL	1	1	1	1	1	1	1
LU-142	MONITOR SPEAKER	1	1	1	1	1	1	1
LU-1121	SPEAKER NETWORK ASSY.	1	1	1	1	1	1	1
		ADDITIONAL EQUIPMENT REQUIRED						
AM-1092	XL OPTICAL CONVERSION KIT	1	1	1	1	1	1	1
	FOR FOUR CHANNEL INSTALLATION ADD:							
AM-1064	CONTROL UNIT	1	1	1	1	1	1	1
AM-1065	PRE-AMPLIFIER	1	1	1	1	1	1	1
P-3257	TRANSFORMER	1	1	1	1	1	1	1
LU-150	AUDITORIUM SPEAKER	← AS REQUIRED →						
LU-151	" "	← AS REQUIRED →						

EQUIPMENT REQUIREMENTS FOR A COMPLETE "NEW THEATRE"
XL-500 3 CHANNEL MAGNETIC STEREOPHONIC / OPTICAL SYSTEM

COMPONENT NUMBER	DESCRIPTION	532-38	532-39	532-311	532-312	536-312	536-322	536-324
		← SPECIFY XL-500 SYSTEM REQUIRED →						
		← PLUS THE FOLLOWING OPTICAL KIT →						
AM-1093	XL-500 NEW THEATRE EQUIP. KIT	*1	*1	*1	*1	*1	*1	*1
	FOR FOUR CHANNEL INSTALLATION ADD:							
AM-1026	POWER AMPLIFIER	–	–	–	–	1	1	1
AM-1027	" "	1	1	1	1	–	–	–
AM-1031	SYSTEM CABINET (4 PLACE)	1	1	1	1	1	1	1
AM-1037	SYSTEM CABINET KIT	1	1	1	1	1	1	1
AM-1091	XL-500 4th CHANNEL KIT	1	1	1	1	1	1	1
LU-150	AUDITORIUM SPEAKER	← AS REQUIRED →						
LU-151	" "	← AS REQUIRED →						

*FOR FOUR CHANNEL INSTALLATION ORDER AM-1093 OPTICAL KIT LESS ONE (1) AM-1034

3 Pages - Page 1

Issued by
Engineering Department
Printed in U. S. A.

August 23, 1955
Issue #1

SIMPLEX THREE CHANNEL MAGNETIC STEREOPHONIC / OPTICAL SOUND SYSTEMS (2ON)
(FOR MODERNIZATION OF ANY EXISTING OPTICAL SOUND SYSTEM OTHER THAN XL)

	COMPONENT NUMBER	DESCRIPTION	XL101	XL532 -38	XL532 -39	XL532 -311	XL532 -312	XL536 -312	XL536 -322	XL536 -324
REPRODUCER EQUIPMENT	SH-1025	MAGNETIC SOUNDHEAD	–	2	2	2	2	2	2	2
	SH-1026	" " " (MIXER TYPE)	2	–	–	–	–	–	–	–
	AM-211	FOUR CHANNEL CHANGEOVER CAB.	2	2	2	2	2	2	2	2
	AM-1079	WARPING UNIT	1	–	–	–	–	–	–	–
AMPLIFIER EQUIPMENT	AM-1026	POWER AMPLIFIER	–	–	–	–	–	3	3	3
	AM-1027	" "	–	3	3	3	3	–	–	–
	AM-1028	PRE-AMPLIFIER	–	1	1	1	1	1	1	1
	AM-1031	SYSTEM CABINET (4 PLACE)	–	1	1	1	1	1	1	1
	AM-1054	MONITOR AMP. & CONTROL PANEL	–	–	–	1	1	1	1	1
	AM-1055	SYSTEM CABINET KIT	–	–	–	1	1	1	1	1
	AM-1062	MONITOR CONTROL PANEL & SYSTEM CAB. KIT	–	1	1	–	–	–	–	–
	AM-1065	PRE-AMPLIFIER	2	3	3	3	3	3	3	3
	AM-1066	" " CABINET	1	1	1	1	1	1	1	1
	AM-1089	SYSTEM CONTROL CABINET	+	1	1	1	1	1	1	1
	PU-1011	PRE-AMPLIFIER POWER SUPPLY	1	1	1	1	1	1	1	1
	PU-1012	POWER SUPPLY CABINET	1	–	–	–	–	–	–	–
	PU-1014	" " "	–	1	1	1	1	1	1	1
LOUD - SPEAKER EQUIPMENT	LU-143	STAGE SPEAKER EQUIPMENT	–	–	–	3	–	–	–	–
	LU-144	" " "	–	–	–	–	3	3	–	–
	LU-145	" " "	–	–	–	–	–	–	3	–
	LU-146	" " "	–	–	–	–	–	–	–	3
	LU-148	" " "	–	3	–	–	–	–	–	–
	LU-160	" " "	–	–	3	–	–	–	–	–
	LU-1121	SPEAKER NETWORK ASSEMBLY	–	–	–	3	3	3	3	3
ACCESSORY EQUIPMENT	AM-207	SYSTEM SELECTOR BOX	1	–	–	–	–	–	–	–
	LU-142	MONITOR SPEAKER	–	1	1	1	1	1	1	1
	PU-1013	POWER SUPPLY DUMMY LOAD	2	–	–	–	–	–	–	–
EMERGENCY TUBE KITS	AM-1063	SPARE TUBE KIT	1	1	1	1	1	1	1	1
	AM-1067	" " "	–	1	1	1	1	–	–	–
	AM-1068	" " "	–	–	–	–	–	1	1	1
FOR FOUR CHANNEL INSTALLATION ADD:										
	*AM-1091	XL500 4th CHANNEL KIT	1	1	1	1	1	1	1	1
	LU-150	AUDITORIUM SPEAKER	← AS REQUIRED →							
	LU-151	" "	← AS REQUIRED →							
IF NEW FOURTH CHANNEL POWER AMPLIFIER EQUIPMENT IS DESIRED, ADD:										
	AM-1070	AUDITORIUM AMP. KIT	–	–	–	–	–	1	1	1
	AM-1071	" " "	1	1	1	1	1	–	–	–

*SOLD ONLY WITH COMPLETE SOUND SYSTEM

6/23/55

August 23, 1955
Issue #1

Issued by
Engineering Department
Printed in U.S.A.

SIMPLEX XL MAGNETIC STEREOPHONIC/OPTICAL SOUND KITS

AM-1070 AMPLIFIER KIT

1 - AM-1026	Power Amplifier
1 - AM-1034	System Cabinet (Single Place)
1 - AM-1037	Cabinet Kit
1 - P-2076	Resistor

AM-1071 AMPLIFIER KIT

1 - AM-1027	Power Amplifier
1 - AM-1034	System Cabinet (Single Place)
1 - AM-1037	Cabinet Kit
1 - P-2076	Resistor

AM-1091 XL500 4TH CHANNEL KIT

1 - AM-1064	Control Unit
1 - AM-1065	Pre-Amplifier
1 - P-3257	Transformer

AM-1092 XL500 OPTICAL CONVERSION KIT

1 - AM-1034	System Cabinet (Single Place)
1 - AM-1050	Cabinet Kit
1 - AM-1081	Monitor Control Panel
1 - G-2474	Network Box

AM-1093 XL500 NEW THEATRE EQUIPMENT KIT

1 - AM-1034	System Cabinet (Single Place)
2 - SH-1007	Sound Head Assembly (60 Cycle)
or	
2 - SH-1008	" " " (50 Cycle)
2 - SH-1009	Motor Assembly (60 Cycle)
or	
2 - SH-1010	" " (50 Cycle)
1 - SH-1011	Sound head Accessory Kit
1 - PU-1009	Power Unit (60 Cycle)
or	
1 - PU-1010	" " (50 Cycle)
1 - AM-1050	Cabinet Kit

Issued by
Engineering Department
Printed in U. S. A.

August 23, 1955
Issue #1

SECTION I

PRE-INSTALLATION RECOMMENDATIONS

A. GENERAL

1. The customer should become thoroughly familiar with the conduit layout and wiring diagram included at the end of this section. The appropriate Stage Speaker Equipment layout and wiring diagram should be selected from the several available combinations of high and low frequency speakers included in this section. These illustrations not only list the dimensions and weight of the various components, but show the size of the interconnecting conduit and the size and type of wire. They are a valuable aid in planning for the efficient installation of the system.

2. He is urged to conform to these recommendations before arrangements are made for the installation of the Sound System.

3. He should contract for the necessary labor and material required for the complete installation of the entire Sound System far enough in advance of the arrival of the Installation Inspector so that there will be no delays in completing the work.

4. These recommendations are based on the regulations of the National Board of Fire Underwriters and it is the duty of the Customer to insist that all work performed by the electrical contractor shall be in accordance with these regulations.

5. Sometimes special conditions may necessitate deviation from these instructions. In such cases, it is recommended that the nearest Branch Office of National Theatre Supply be advised before any work progresses.

6. Close adherence to all national and local codes and regulations and complete cooperation with the Installation Inspector will result in the most satisfactory installation at a minimum of expense and time.

B. SPACE REQUIREMENTS

1. Projection Room.

   a. The Magnetic Soundhead, which is mounted above the projector mechanism, raises the upper magazine 4-1/2 inches. There must be sufficient head room for this increase in height.

   b. The System Cabinet requires a wall mounting space 44-1/4" high, 21" wide and 14" deep. There should be at least 6" clearance on all sides and not less than two feet in front for inspection and servicing.

Issued by
Engineering Department
Printed in U. S. A.

June 30, 1954
Issue #1

The bottom of the cabinet should not be less than 6" from the floor.

c. The Pre-Amplifier Cabinet, which provides for the mounting of four pre-amplifiers, requires a space 13-3/8" high, 12-3/4" wide and 7-1/4" deep. Wherever possible, it should be mounted on the front wall between machines. In some instances, it may be necessary to build offset mounting brackets that will provide clearance for obstructions on the front wall. It should not be less than three feet from the projector drive motors, the projector changeover or the Pre-Amplifier Power Supply Cabinet to prevent the possibility of hum pickup. The clearance on all sides should not be less than 3" and not less than two feet in front for servicing and inspection.

d. The Four-Channel Changeover Cabinet, requiring a wall mounting space of 6-1/2" high, 6" wide and 5-3/4" deep, should be mounted on the front wall in a convenient operating position at each projector.

e. The Balance and Warping Cabinet, requiring a wall mounting space 12" high x 10" wide x 6" deep, should be mounted on the front wall between machines. Since the system volume control is in this cabinet, it should be conveniently located from an operating standpoint.

f. The System Selector Box, requiring a wall mounting space of 6" high, 8" wide and 4" deep, should also be mounted on the front wall, preferably between the two machines in a two-projector installation. If however, front wall conditions prohibit such a location, it may be mounted adjacent to the system cabinet, referred to in paragraph "b" above.

g. The Pre-Amplifier Power Supply, requiring a wall mounting space of 16" high, 21" wide and 8-3/4" deep, may be located in any convenient position in the Projection Room, not less than three feet from the Pre-Amplifier Cabinet, although the conduit runs required, should be considered in this location.

2. Auditorium.

   a. Select locations for the Auditorium Speakers on the walls around the seating area (including the balcony, if any) to obtain complete coverage of the seating area. Approximately 60° vertical and horizontal coverage may be assumed for each speaker.

   b. The conduit run from the Projection Room to the Speakers should be planned. A 1/2" conduit is required between speakers and from the most convenient speaker to the Projection Room.

3. Stage.

   a. Three identical stage speaker equipments are mounted behind the screen, one located at the center and the other two at two-thirds of the distance from the center to either edge of the screen.

      NOTE: Each stage speaker equipment should cover the entire seating area. It may be necessary, therefore, in some instances, to move the left and right equipments and angle them to obtain full coverage.

   b. The overall size of one of each of the various stage speaker equipments available supplied is tabulated below, Space should be provided for the three equipments and also not less than 18" behind the Low Frequency Horn for servicing.

System	No. HF Units	No. LF Units	Overall Dimensions - Inches			
			Height	Width	Depth	Fig. No.
XL232-38 XL233-39	1	1	67	50	23	2A
XL232-39 XL233-39	1	1	72	48	26	2B
XL232-311 XL233-311	1	1	65	77	35	2C
XL232-312 XL233-312 XL236-312	1	2	65	77	35	2D
XL232-322 XL233-322 XL236-322	2	2	73	77	35	2E
XL236-324	2	4	115	77	35	2F
XL2312-346	4	6	161	77	38	2G

Issued by
Engineering Department
Printed in U. S. A.

June 30, 1954
Issue #1

C. POWER REQUIREMENTS

1. A power supply of 105-125 volts AC, 50-60 cycles ±3% is required for this equipment, the maximum power consumption being 500 watts.

   NOTE: If the power supply is other than that specified, special equipment is required, unless the Power Company will cooperate to provide a power supply within the above limits.

D. MATERIAL SUPPLIED BY THE CUSTOMER

1. The Customer furnishes all electrical conduit and wiring and associated material required for the installation of this system.

   NOTE: Before ordering such material, the appropriate drawings should be studied carefully, the location of the equipment determined and the conduit runs planned.

2. Conduits are recommended so that wires may be pulled through readily.

3. The following list of material isgiven as an indication of the various items required to complete the installation satisfactorily.

   NOTE: Since the amount of the material will vary, this list is typical only.

Quantity	
As required	Conduit, 1/2", 3/4" and 1" rigid
Approximately 5 feet	Conduit, 1" flexible
As required	Condulets and outlet boxes, 1/2", 3/4" and 1".
4	Connectors, 1" flexible conduit
As required	Wire, No. 14 BRC, black and white
As required	Microphone cable, Belden #8422*
As required	Locknuts, bushings, 1/4" toggle bolts, expansion bolts or through bolts, shields, straps, etc.for equipment mounting.

*May be obtained from National Theatre Supply.

SECTION II

INSTALLATION OF EQUIPMENT

A. GENERAL

The Single Film Stereophonic Sound Systems should be installed in accordance with the instructions below. Figures 1 and 2 show typical arrangements to provide maximum ease of operation and servicing. In some instances, however, close adherence to the layouts shown may be impractical. In such cases, it is recommended that either National Theatre Supply or the Installation Inspector be consulted before any work progresses. In any case, the various system components should not be mounted closer to each other than the minimum dimensions shown.

B. UNPACKING

1. Unpack the equipment only as required during installation, to avoid possible damage and the introduction of foreign material that may affect operation.

2. Inspect carefully during unpacking and remove any foreign material at once.

C. EQUIPMENT MOUNTING

1. Fasten all wall mounting equipment, outlet boxes, conduits and condulets to brick or concrete walls with bolts and expansion shields, to tile walls with toggle bolts and to gypsum blocks or transite walls with through bolts.

D. CONDUIT AND WIRING

1. Conduit sizes and wire sizes should be as specified on the appropriate associated drawings.

2. Conduit runs should be as short as possible.

3. Connections should be made in accordance with the associated drawings.

   NOTE: The AC power supply wires may, if desired, be fastened under the terminal screws, using the P-2942 Cup Washers supplied with the cabinet kit.

4. Splices are to be made only as specified.

5. Shielded cable connections in the magnetic soundhead and pre-amplifier cabinet, should be made with the minimum of unshielded conductors exposed and these unshielded conductors twisted as close to the terminals as possible.

   CAUTION: Unless this method of connection is followed carefully, noise and hum may be introduced into the system.

Issued by
Engineering Department
Printed in U. S. A.
June 30, 1954
Issue #1

E. AMPLIFIER EQUIPMENT

1. Mount the system cabinet in the location selected so that it is convenient for inspection and servicing and the controls are readily accessible and visible from the operating position at the projectors.

   NOTE: The speaker switch kit is installed first, the cabinet kit second, followed by the control panel and amplifiers.

2. Install the speaker switch kit in the bottom section of the cabinet as follows:

   a. Fasten the mounting plate to the upper four studs on the rear of the cabinet with the cable form at the left, using the screws supplied.

   b. Fasten the terminal strip to the lower four studs on the rear of the cabinet, using the screws supplied.

   c. Make all connections to the terminal strip per the system wiring diagram.

   d. Connect to and strap the transformer primary, in accordance with the following table, to match the output impedance of the amplifier driving the Auditorium Speakers.

Primary			Secondary			
Impedance Ohms	Connect to	Strap	Impedance Ohms	Connect to	Strap	Power in 70 Volt Line-Watts
16	7 and 12	9 to 10	625	1 and 6	3 to 4	8
12	7 and 11	9 to 10	470	1 and 5	3 to 4	11
8	8 and 11	9 to 10	312	2 and 5	3 to 4	16
4	7 and 12	7 to 10	156	1 and 6	1 to 4	32
		9 to 12			3 to 6	
2	8 and 11	8 to 10	78	2 and 5	2 to 4	64
		9 to 11			3 to 5	

   e. Initially, connect to and strap the transformer secondary, per the above table, so that the power available in the 70 volt line to the Auditorium Speakers is the rated power of the Auditorium Speaker Amplifier or for the next higher power if the amplifier rating is in between two powers listed above.

      NOTE: For example, if the rated power of the amplifier is 40 watts, strap and connect for 64 watts.

   f. Determine the normal volume level per paragraph L, 4 below and if necessary revise the connections to the transformer to change the power available.

3. Install the cabinet kit in the system cabinet as follows:

NOTE: The cabinet kit includes the terminal strips properly interconnected and the necessary mounting details.

a. Position the terminal strips, having terminal designations beside the terminals, on the vertical mounting rails, so that the bottom of each is even with the top of the cable clamp.

b. Secure each terminal strip with four H-2724 Screws, P-1146 Lockwashers and two P-2314 Clamping Plates.

c. Make all external connections to the terminal strips per the system wiring diagram.

4. Install each unit in the system cabinet as follows, starting at the bottom.

a. With the cabinet cover off, pull out both chassis slides, depress each locking lever so that it clears the stop screw and release, thereby preventing the slides from returning into the cabinet.

b. Guide the chassis between the slides and position with the rear chassis support screws in the slots in each slide.

NOTE: The rear chassis support screws depress the locking lever so that they clear the stop pins and the chassis may be pushed into the cabinet.

c. Push the chassis and slides in so that the front of the chassis rests on the crossbar of the cabinet, but the pivot mounting holes are still accessible.

d. Line up the pivot screw hole in the slide and chassis, insert a spacing washer between the chassis and slide and line up with the hole.

e. Insert the pivot screw and fasten with the nut..

NOTE: The washer must be positioned so that it is free to turn after the nut is tightened.

f. Insert the cable form in the P-1066 Cable Clamp, (position to clamp the cable form at the lacing) and mount the cable clamp with an H-2723 Screw.

NOTE: Be sure that there is no twist in the cable form that may tend to cause interference with the chassis.

g. Connect the cable form wires from each chassis to its associated terminal strip per the system wiring diagram.

F. AM-211 FOUR-CHANNEL CHANGEOVER CABINET

1. Mount one cabinet on the front wall of the Projection Room adjacent to each Projection Port and in such a location that the Projectionist can make the sound changeover at the operating position at each Projector.

2. The cabinets should be so located that the connecting conduits may be run between them without interference from other equipment that may be mounted on the front wall.

3. Make connections to the terminal strip per the system wiring diagram and form the wires so that they will not contact the changeover switch when the door is closed.

G. AM-212 BALANCE AND WARPING CABINET

1. Mount the cabinet on the front wall so that the system volume control and emergency switch contained therein, are readily accessible.

2. Locate so that the connecting conduits may be run to it without interference from other equipment that may be mounted on the front wall.

3. Make connections to the terminal strip per the system wiring diagram.

4. During the tuning-up procedure described in the Operating Instructions, Section III, paragraph K, adjust the high frequency response and system gain as required.

H. AM-207 SYSTEM SELECTOR BOX

1. Wherever possible, mount on the front wall in a convenient location between machines, bearing in mind that this cabinet is used to select the type of reproduction:- optical or single film magnetic sound.

2. This unit selects either optical or single film stereophonic. During stereophonic operation, the regular sound system power amplifier usually drives the auditorium speakers. For the special condition, involving the use of a separate power amplifier to drive these speakers, refer to paragraph 8 below. The connections and strapping required for use with various types of sound systems are described below.

3. Simplex XL Sound Systems and other systems having these characteristics:-

500 ohm line between the Pre-Amplifier output and the Power Amplifier input:- one side grounded.

Power Amplifier with a nominal input level of -20 db/6 mw.

No DC voltage on the line between the Pre-Amplifier and the Power Amplifier.

a. Make external connections per the appropriate system wiring diagram. No internal strapping changes required.

4. Simplex Four Star Sound Systems and other Systems having these characteristics:-

High impedance line (10,000 to 20,000 ohms) between the Pre-Amplifier output and the Power Amplifier input:- one side grounded.

Power Amplifier with a nominal input level of -20 db/6 mw.

DC voltage on the line between the Pre-Amplifier and the Power Amplifier.

a. Remove the yellow wire between terminals "A" and "E".

b. Strap terminal "A" to terminal "C" and terminal "D" to terminal "E".

c. Connect the regular Pre-Amplifier output to terminals "REG IN 1" and "F" (instead of "REG IN 1" and "REG IN 2" as shown on the system wiring diagram).

d. Make all other connections per the appropriate system wiring diagram.

CAUTION: Connect the ground side of all circuits to terminal "1" of each pair of terminals.

5. Systems having these characteristics.

High impedance line (10,000 to 20,000 ohms) between the Pre-Amplifier output and the Power Amplifier input:- one side grounded.

Power Amplifier with a nominal input level of -20 db/6 mw.

No DC voltage on the line between the Pre-Amplifier and the Power Amplifier.

a. Remove the yellow wire between terminals "A" and "E".

b. Strap terminal "A" to terminal "C" and terminal "D" to terminal "E".

c. Make all external connections per the appropriate system wiring diagram.

CAUTION: Connect the ground side of all circuits to terminal "1" of each pair of terminals.

6. Systems having a power amplifier with a Nominal Input Level of less than -20 db/6mw.

   a. Remove the yellow wire between terminals "A" and "E".

   b. Determine the attenuation required so that normal setting of the volume control in this cabinet will be approximately in mid-position (refer to Section II, paragraph L), select the resistors from the table below and connect.

Attenuation db	R1 & R3 Ohms	R2 Ohms
-10	1,000	750
-20	620	2,400
-30	510	7,500
-40	510	24,000

   Connect R1 to terminals "A" and "B"
   R2 to terminals "A" and "E"
   R3 to terminals "B" and "E"

   c. Make all external connections per the appropriate system wiring diagram.

   CAUTION: Connect the ground side of all circuits to terminal "1" of each pair of terminals.

7. Systems having a Power Amplifier with a Balanced or Ungrounded input.

   NOTE: A 500/500 ohm matching transformer (Peerless Type E-372-Q or equivalent, furnished by customer)is required.

   a. Mount this matching transformer in a suitable box adjacent to the System Selector Box and make the following connections in the System Selector Box.

   b. Remove the yellow wire between terminals "A" and "E".

   c. Remove the strap between terminals "#4 IN 1" and "REG IN 1".

   d. Strap terminal "REG IN 1" to terminal "OUT 1".

   e. Connect one winding of the 500/500 ohm matching transformer to terminals "#4 IN1" and "A" and the other winding to terminals "B" and "E".

   f. Make all other external connections to the terminal strip per the appropriate system wiring diagram.

8. Additional Amplifier to Drive the Auditorium Speakers.

a. The Auditorium Kit (AM-1070 for large theatres, AM-1071 for small theatres or the AM-1073 for medium theatres) provides a separate amplifier to drive the Auditorium Speakers when it is difficult or undesirable to use the regular Power Amplifier for both optical sound reproduction and to drive the Auditorium Speakers. The changes are described below.

b. Remove the yellow wire between terminals "A" and "E".

NOTE: In some installations it may be necessary to remove the strap between terminals "#4-IN-1" and "REG-IN-1" to avoid a system loop ground.

c. Connect a 500 ohm, 1/2 watt resistor between terminals "A" and "B".

d. Install the terminal strip in the AM-1034 System Cabinet and make external connections to this terminal strip and the System Selector Box per Figure 5. Other connections should be made per the appropriate system wiring diagram.

e. Install the amplifier in the cabinet per Section II, paragraph E, 4, and connect the amplifier cable form wires to the terminal strip per Figure 5.

I. AM-1066 PER-AMPLIFIER CABINET

1. Whenever possible, mount the cabinet on the front wall of the Projection Room between Projectors not less than three feet from the projector motors and picture changeovers, and so that it will be convenient for servicing.

2. In some instances, it may be necessary to improvise suitable mounting brackets to clear obstructions.

3. Make connections to the terminal strip per the system wiring diagram and per paragraph D, 5 on page 2-1.

4. Plug an AM-1065 Pre-Amplifier into each of the four multiconductor receptacles in each cabinet. Refer to the Operating Instructions, Section III, c for adjustment procedure.

J. SH-1025 MAGNETIC SOUNDHEAD

1. Remove the upper magazine from the projector mechanism.

NOTE: When the upper magazine is a Simplex XL, remove the pilot light cover plate and unsolder the wire from the toggle switch before removing the magazine.

2. Remove the rear cover from the magnetic soundhead by loosening the two knurled captive screws.

Issued by
Engineering Department
Printed in U. S. A.

June 30, 1954
Issue #1

3. Mount the soundhead on the top of the projector mechanism with the four socket head screw supplied.

   NOTE: When the projector mechanism is other than Simplex XL, an adapter will be necessary and should be installed per the instructions packed with it.

4. Using a straight edge held against the face of the upper feed sprocket of the projector mechanism and extending into the magnetic soundhead, adjust the soundhead so that the straight edge just touches the sprocket in the magnetic soundhead. Also align the bottom edge of the magnetic soundhead with the top edge of the projector mechanism. Tighten the four mounting screws.

5. Fasten the film slot closure plate to the bottom of the soundhead.

6. Slide a flywheel on the lower and upper stabilizer shafts. Position so that the pin on the shaft is in alignment with the keyway in the hub of each flywheel and fasten securely with the screws supplied and replace the rear cover.

7. Modify each upper magazine per paragraph N below and mount on top of the magnetic soundhead with the screws previously removed.

   NOTE: If the mechanism is other than Simplex XL, an adapter will be necessary and should be installed per the instructions shipped with it.

8. Remove the terminal strip cover, make all connections to the terminal strip per the system wiring diagram and per paragraph D, 5. Replace the cover.

9. Refer to the Operating Instructions, Section III, B, 9 for magnetic pickup head adjustments.

K. PU-1012 PRE-AMPLIFIER POWER SUPPLY CABINET

1. Mount the cabinet in the selected location and make connections to the terminal strip in accordance with the system wiring diagram.

2. Mount the PU-1011 Power Supply on the back of the cabinet using the mounting screws provided and connect the cable form terminals to the terminal strip in accordance with the system wiring diagram.

3. Plug an AM-1064 Control Unit into the left receptacle and a PU-1013 Dummy Load into the right receptacle on the rear of the cabinet.

4. Refer to the Operating Instructions, Section III, F for PU-1011 Power Supply adjustments and to Section III, G for adjustment of the AM-1064 Control Unit.

5. The resistors in the PU-1013 Dummy Load should be strapped in accordance with the figure and table below to maintain a constant load on the PU-1011 Power Supply B+ output.

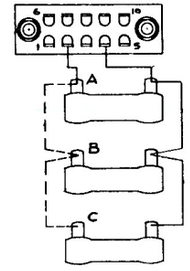

No. of AM-1065 Pre-Amplifiers	No. of AM-1064 Control Units	Strap
6	None	A to B
4	1	A to B
4	None	A to B, B to C
3	None	A to B, B to C

L. AUDITORIUM SPEAKERS

1. Remove the cabinet cover from each cabinet, mount the cabinets in the selected locations, run the connecting conduit and wires.

NOTE: In some instances, it may be necessary to use spacers at the top of the LU-151 Cabinet to tilt it downward to improve distribution.

Issued by
Engineering Department
Printed in U. S. A.

June 30, 1954
Issue #1

2. Fasten the speaker unit behind the grille on the cover and the matching transformer in a convenient location on the cover or in the bottom of the cabinet, using the screws supplied.

3. Connect the primary windings of all matching transformers in parallel across the line from the Speaker Switch Kit.

4. Divide the wattage rating of the power amplifier, driving the speakers, by the number of speakers to obtain the nor- number of watts per speaker.

   NOTE: Normal Auditorium Speaker level should be obtained with the volume control in the System Selector Box in mid-position. If, however, normal volume control setting is near either end, changes in the strapping of the matching transformer secondary in the Speaker Switch Kit (see paragraph E, 2 above) and of the matching transformer primary in each Auditorium Speaker (see table in paragraph 7, b below) should be made so that normal setting is near mid-position. Also, it may be necessary to change the primary strapping of some transformers to reduce the level of individual speakers. The line impedance, referred to in the following paragraph, should then be determined by the parallel resistance method.

5. The line impedance from the Speaker Switch Kit will usually be the primary impedance of the Auditorium Speaker transformer, as strapped, divided by the number of transformers, which determines the strapping of the matching transformer in the Speaker Switch Kit.

6. For example, if the power amplifier driving the speakers is rated at 40 watts, and there are 10 speakers, the power available for each speaker will be four watts. The primary winding of each matching transformer should then be strapped initially for 1,250 ohms. The matching transformer secondary in the LU-1122 Speaker Switch Kit should be strapped initially for 78 ohms, that is, for the next higher power rating.

7. LU-150 Matching Transformer Strapping.

   a. Secondary - Strap terminals 9 and 10 and connect terminals 8 and 11 (8 ohms impedance) to the voice coil terminals of the speaker.

   b. Primary - Strap and connect per the following table.

Primary Impedance	Connect To	Strap	Power From 70 Volt Line
10,000 ohms	1 - 6	3 to 4	1/2 Watt
7,500 ohms	1 - 5	3 to 4	2/3 Watt
5,000 ohms	2 - 5	3 to 4	1 Watt
2,500 ohms	1 - 6	1 to 4 & 3 to 6	2 Watts
1,250 ohms	2 - 5	2 to 4 & 3 to 5	4 Watts

8. LU-151 Matching Transformer Strapping.

   a. Secondary - Connect terminals S1 and S2 (8 ohms impedance) to the voice coil terminals of the speaker.

   b. Primary - Strap and connect per the table in the preceding paragraph 7, b.

9. Fasten the cover to each cabinet when all connections have been made.

M. STAGE SPEAKER EQUIPMENT

1. Three identical two-way loudspeaker equipments, including networks, are to be located on the stage directly behind the screen.

   NOTE: The stage must be level and rigid and support the weight of the speaker equipment.

2. One of these equipments is centrally located behind the screen, the other two to the left and right of center, approximately two-thirds of the distance from the center to the edge of the screen.

   NOTE: The location of the left and right equipments may have to be adjusted in some installations to obtain complete coverage of the seating area and so that drapes, etc. will not interfere.

3. Assemble each low frequency horn component per the appropriate layout, fastening them together with the bolts supplied.

   NOTE: The final position of each low frequency horn assembly, after tuning up is completed (see Operating Instructions, Section III) should be such that the high frequency horn is as close to the screen as is practicable.

4. Set a horn sled on top of each low frequency horn assembly (Figures 2A and 2C to 2G inclusive) and mount the high frequency horn. In Figure 2B, fasten the high frequency horn bracket to the top of the low frequency horn. Two mounting holes are drilled in the top of the low frequency horn.

Issued by
Engineering Department
Printed in U. S. A.

June 30, 1954
Issue #1

NOTE: Hole locations are spotted on the horn sled (Figures 2A and 2C to 2G inclusive) for the various types of high frequency horns to aid in properly positioning the brackets and tilting arm, furnished to secure the horn to the sled.

5. Fasten the horn throat and high frequency unit(s) to the horn (Figures 2A and 2C to 2G inclusive), making sure that the throat and speaker(s) are in alignment before the stud nuts are tightened. In Figure 2B, the horn throat is part of the horn and the high frequency unit threads into the horn.

6. Initially, set the front edge of the leading cell of the high frequency horn 2" in front of the low frequency horn (Figures 2C to 2G inclusive) or 1" in front (Figure 2A) and tilt for proper distribution. In Figure 2B the high frequency horn is fastened to the top of the low frequency horn, using holes provided, and its position is fixed.

7. Remove the rear cover of the low frequency horn(s) and mount the low frequency speaker unit(s).

8. Mount a network on each of the three sets of low frequency horns in a convenient accessible location.

9. Make all connections per the appropriate speaker wiring diagram (Figures4A to 4G inclusive) and replace the cover on all low frequency horns.

N. UPPER AND LOWER MAGAZINE MODIFICATIONS - Refer to Equipment Bulletin, Paragraph M, Pages 10-12, XL-432 & XL-436 Systems, file 40.385.

O. XL OR FOUR STAR SOUND MECHANISM MODIFICATION - Refer to Equipment Bulletin, Paragraph N, Pages 12-13, XL-432 & XL-436 Systems, file 40.385

P. XL PROJECTOR MECHANISM MODIFICATION - Refer to Equipment Bulletin, Paragraph O, Pages 13-18, XL-432 & XL-436 Systems, file 40.385.

I-2253

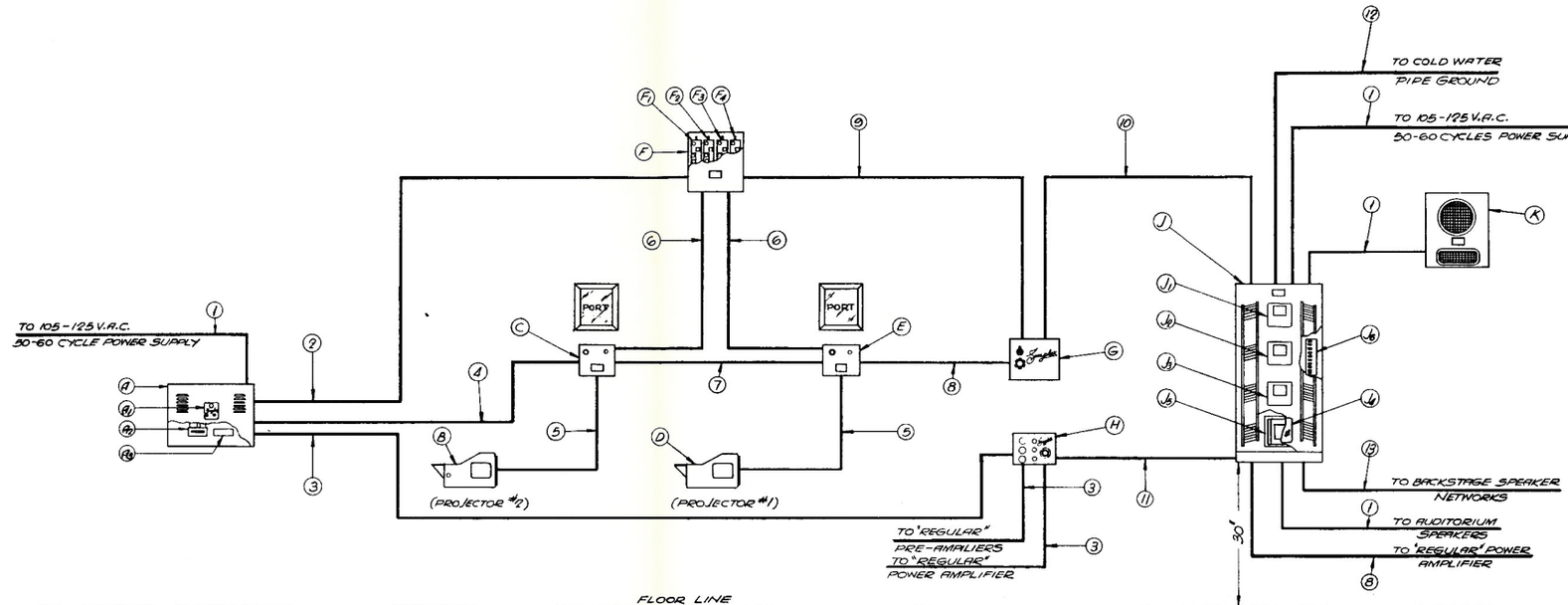

EQUIPMENT

(A) PU-1012 POWER SUPPLY CABINET (16"H. x 21"W. x 8 3/4"D) (38 LBS COMPLETE) INSTALL THE FOLLOWING:—

- (A1) PU-1011 PRE-AMPLIFIER POWER SUPPLY
- (A2) AM-1084 CONTROL UNIT
- (A3) PU-1013 DUMMY LOAD

(B) & (D) SH-1025 MAGNETIC SOUNDHEAD (12"L. x 10"W. x 6 1/2"H.) (20 LBS.)

(C) & (E) AM-211 FOUR CHANNEL CHANGEOVER CABINET (6 1/2"H. x 6"W. x 5 3/4"D.) (5 LBS.)

(F) AM-1066 PRE-AMPLIFIER CABINET (13 1/4"H. x 15"W. x 8 1/4"D.) (12 LBS. COMPLETE) INSTALL THE FOLLOWING:—

- (F1) AM-1065 PRE-AMPLIFIER
- (F2) AM-1065 PRE-AMPLIFIER
- (F3) AM-1065 PRE-AMPLIFIER
- (F4) AM-1065 PRE-AMPLIFIER

(G) AM-212 BALANCE & WARPING CABINET (12"L. x 10"W. x 6"D) (13 LBS)

(H) AM-207 SYSTEM SELECTOR BOX (6"H x 8"W. x 4"D.) (7 LBS.)

(J) AM-1031 FOUR PLACE SYSTEM CABINET (44 1/4"H. x 21"W. x 13 3/4"D) (265 LBS. COMPLETE) INSTALL THE FOLLOWING:—

- (J1) AM-1026, AM-1027 OR AM-1080 POWER AMPLIFIER
- (J2) AM-1026, AM-1027 OR AM-1080 POWER AMPLIFIER
- (J3) AM-1026, AM-1027 OR AM-1080 POWER AMPLIFIER
- (J4) AM-1054 MONITOR AMPLIFIER & CONTROL PANEL
- (J5) LU-1122 SPEAKER SWITCH KIT
- (J6) AM-1055 SYSTEM CABINET KIT

(K) LU-142 MONITOR SPEAKER (18"H. x 15"W. x 8"D.) (19 LBS.)

NOTE:—
LOCATION FOR AM-1066 CABINET MIN. DISTANCE 3 FEET FROM MOTORS & PU-1012 CABINET.

CONDUIT AND WIRING

(1)	1/2" CONDUIT	2-Nº 14 BRC
(2)	3/4" CONDUIT	5-Nº 14 BRC 1-SHIELDED CABLE *
(3)	1/2" CONDUIT	1-SHIELDED CABLE *
(4)	1/2" CONDUIT	3-Nº 14 BRC
(5)	1" FLEXIBLE CONDUIT	1-Nº 14 BRC 4-SHIELDED CABLE *
(6)	1" CONDUIT	4-SHIELDED CABLE * 1-Nº 14 BRC
(7)	3/4" CONDUIT	5-Nº 14 BRC
(8)	3/4" CONDUIT	4-Nº-14 BRC
(9)	3/4" CONDUIT	3-SHIELDED CABLE *
(10)	3/4" CONDUIT	3-SHIELDED CABLE * 1-Nº 14 BRC
(11)	1" CONDUIT	8-Nº 14 BRC
(12)	1/2" CONDUIT	1-Nº 10 BRC
(13)	3/4" CONDUIT	6-Nº 14 BRC

* BELDEN Nº 8422 SHIELDED CABLE

DRAWN 2-18-54
ISSUE 2-1 3-15-54

CONDUIT LAYOUT
XL-232, XL-233 &
XL-236 STEREOPHONIC
SOUND SYSTEMS
INTERNATIONAL PROJECTOR CORPORATION
86 LA FRANCE AVENUE
BLOOMFIELD NEW JERSEY

F I-2253

Issued by
Engineering Department
Printed in U.S.A.

FIGURE 1
XL232, XL233, XL236 SERIES
SIMPLEX SINGLE FILM STEREOPHONIC SOUND SYSTEMS
CONDUIT LAYOUT

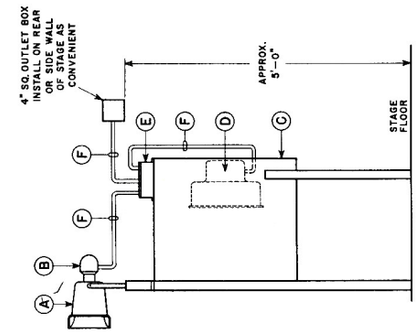

Ⓐ LU-1125 HIGH FREQUENCY HORN (9¾"H x 18½"W x 14½"D) (14 LBS WITH UNIT)
Ⓑ LU-1124 HIGH FREQUENCY UNIT
Ⓒ LU-1127 LOW FREQUENCY HORN (60"H x 48"W x 26"D) (124 LBS WITH UNIT)
Ⓓ LU-1123 LOW FREQUENCY UNIT
Ⓔ LU-1126 NETWORK
Ⓕ NO.16 2-CONDUCTOR TIREX CABLE

FIGURE 2B
STAGE SPEAKER EQUIPMENT LAYOUT
(XL432-36, XL433-39)
1 HIGH FREQUENCY UNIT
1 LOW FREQUENCY UNIT

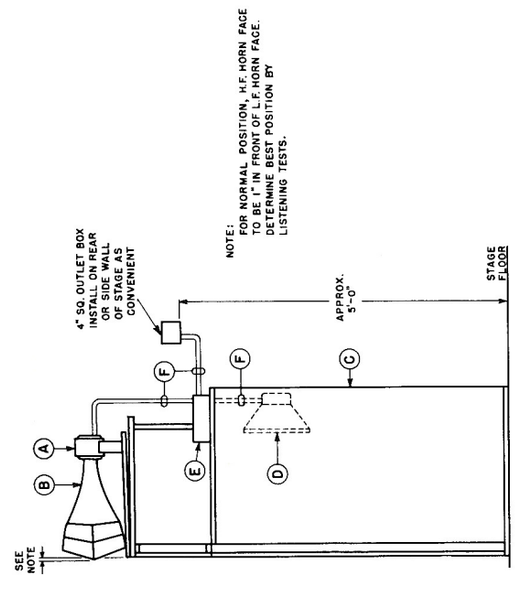

Ⓐ Ⓑ LU-1102 HIGH FREQUENCY UNIT (1)
LU-1099 HIGH FREQUENCY HORN (2 x 4) (9" H x 18" W x 17" D) (17 LBS. WITH UNIT)
Ⓒ LU-1100 LOW FREQUENCY HORN AND WINGS (67"H x 50"W x 24"D, 167 LBS. WITH UNIT)
Ⓓ LU-1101 LOW FREQUENCY UNIT (1)
Ⓔ LU-1098 NETWORK
Ⓕ NO.16 2-CONDUCTOR TIREX CABLE

FIGURE 2A
STAGE SPEAKER EQUIPMENT LAYOUT
(XL232-38, XL233-38)
1 HIGH FREQUENCY UNIT
1 LOW FREQUENCY UNIT

FIGURES 2A AND 2B

ALTEC SERVICE CORPORATION
SIMPLEX
SOUND EQUIPMENT BULLETIN

FIGURE 2D
STAGE SPEAKER EQUIPMENT LAYOUT
(XL232-312, XL233-312, XL236-312)
1 HIGH FREQUENCY UNIT
2 LOW FREQUENCY UNITS

FIGURE 2C
STAGE SPEAKER EQUIPMENT LAYOUT
(XL232-311, XL233-311)
1 HIGH FREQUENCY UNIT
1 LOW FREQUENCY UNIT

FIGURES 2C AND 2D

Issued by
Engineering Department
Printed in U. S. A.

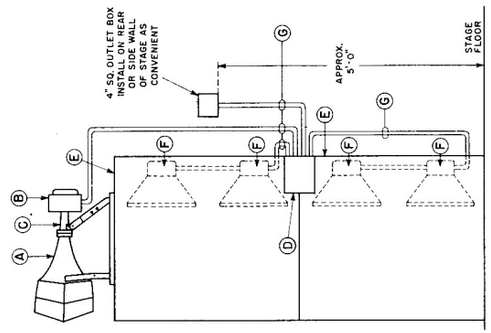

Ⓐ HIGH FREQUENCY HORN
LU-1086 (2×5) OR LU-1087 (3×5)
(25"H×30"W×27"D MAXIMUM)
(132 LBS. WITH 2 UNITS MAXIMUM)

ⒷⒸ LU-1104 HIGH FREQUENCY UNIT (2)

ⒷⒸ LU-2065 HORN THROAT (LU-1086)
LU-2066 HORN THROAT (LU-1087)

ⒹⒺ LU-1121 NETWORK

ⒹⒺ LU-1107 LOW FREQUENCY HORN (2)
(42"H×77"W×35"D EACH)
(550 LBS., ONE HORN WITH 2 UNITS)

Ⓕ LU-1081 LOW FREQUENCY UNIT (4)

ⒻⒼ NO. 16 2-CONDUCTOR CABLE

FIGURE 2F
STAGE SPEAKER EQUIPMENT LAYOUT
(XL236-32+, XL232-324)
2 HIGH FREQUENCY UNITS
4 LOW FREQUENCY UNITS

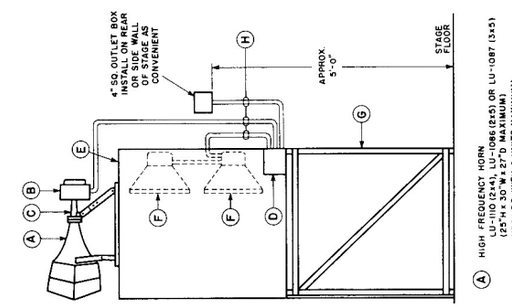

Ⓐ HIGH FREQUENCY HORN
LU-1110 (2×4), LU-1086 (2×5) OR LU-1087 (3×5)
(25"H×30"W×27"D MAXIMUM)
(132 LBS. WITH 2 UNITS MAXIMUM)

ⒷⒸ LU-1104 HIGH FREQUENCY UNIT (2)

ⒷⒸ LU-2065 HORN THROAT (LU-1110, LU-1086)
LU-2066 HORN THROAT (LU-1087)

ⒹⒺ LU-1121 NETWORK

ⒹⒺ LU-1107 LOW FREQUENCY HORN
(42"H×77"W×35"D)
(550 LBS., ONE HORN WITH 2 UNITS)

Ⓕ LU-1081 LOW FREQUENCY UNIT (2)

ⒼⒽ LU-1108 LOW FREQUENCY HORN STAND

ⒼⒽ NO. 16 2-CONDUCTOR TIREX CABLE

FIGURE 2E
STAGE SPEAKER EQUIPMENT LAYOUT
(XL232-322, XL233-322, XL236-322)
2 HIGH FREQUENCY UNITS
2 LOW FREQUENCY UNITS

FIGURES 2E AND 2F

Issued by
Engineering Department
Printed in U. S. A.

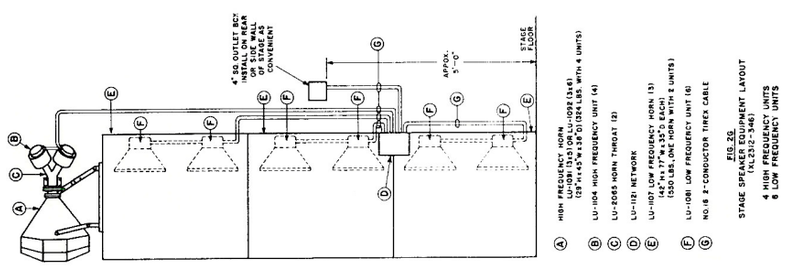

FIG. 2G
STAGE SPEAKER EQUIPMENT LAYOUT
(ALTEC 3-346)
4 HIGH FREQUENCY UNITS
6 LOW FREQUENCY UNITS

FIGURE 2G

Issued by
Engineering Department
Printed in U. S. A.

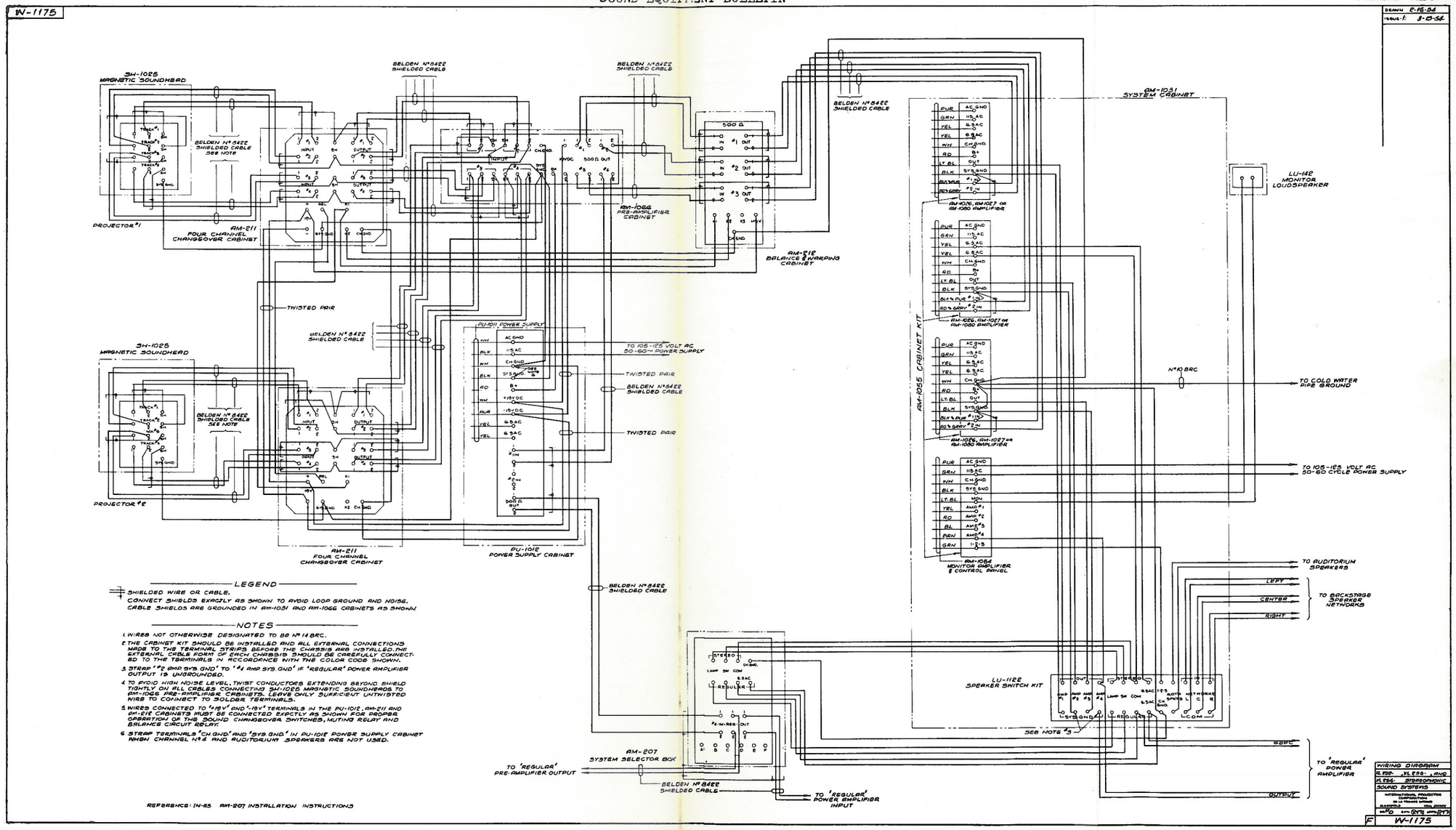

Issued by
Engineering Department
Printed in U.S.A.

FIGURE 3
XL232, XL233, XL236 SERIES
SIMPLEX SINGLE FILM STEREOPHONIC SOUND SYSTEMS
WIRING DIAGRAM

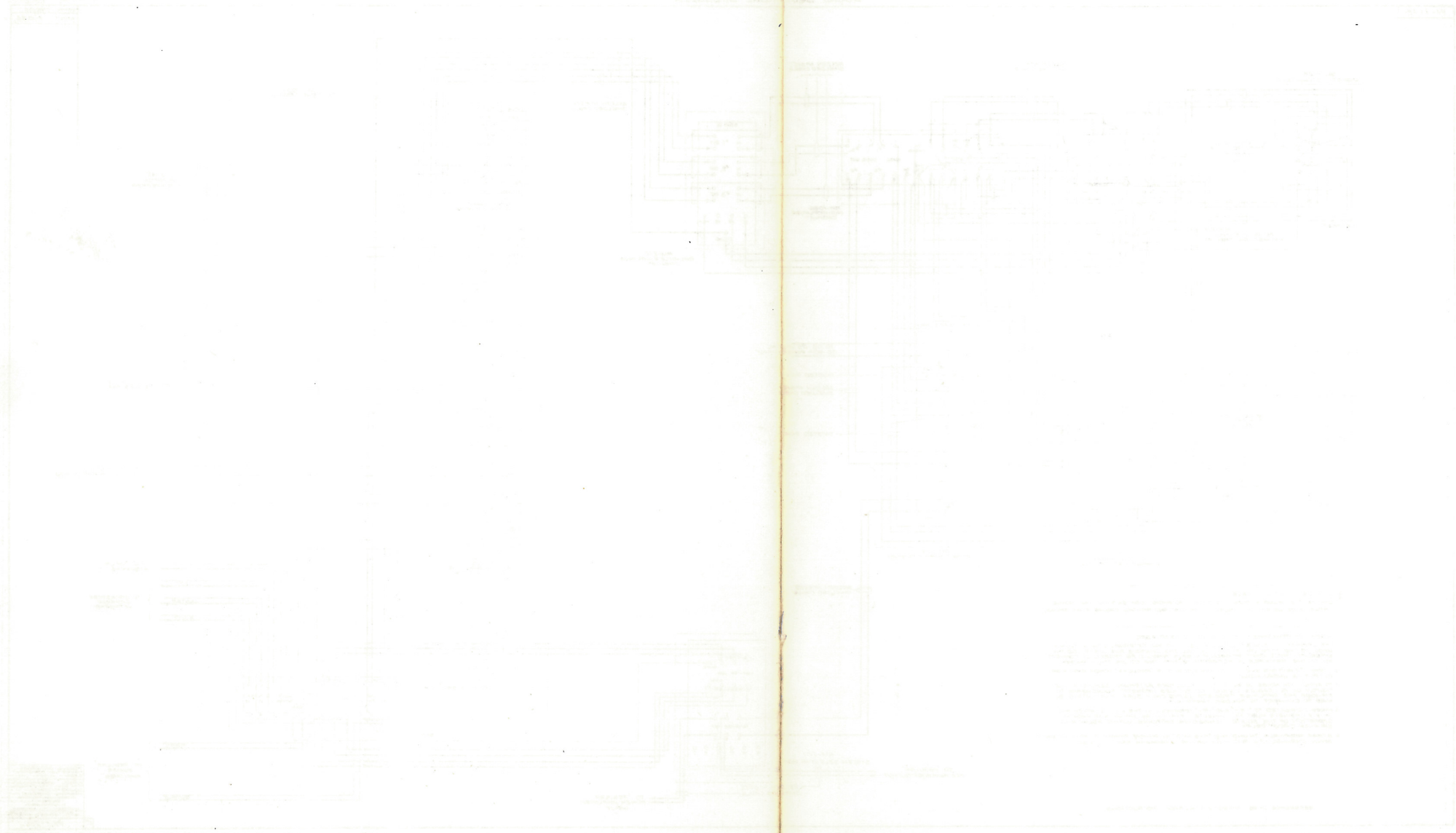

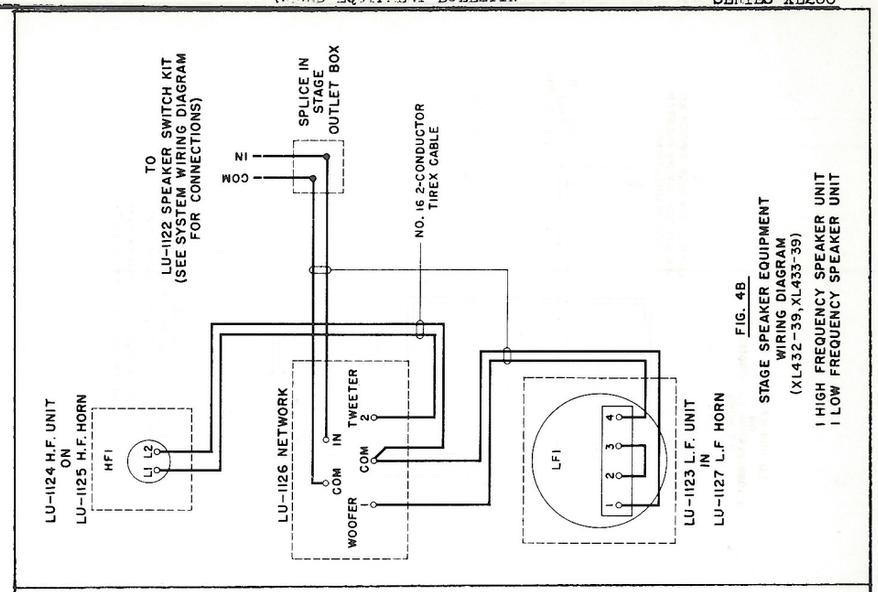

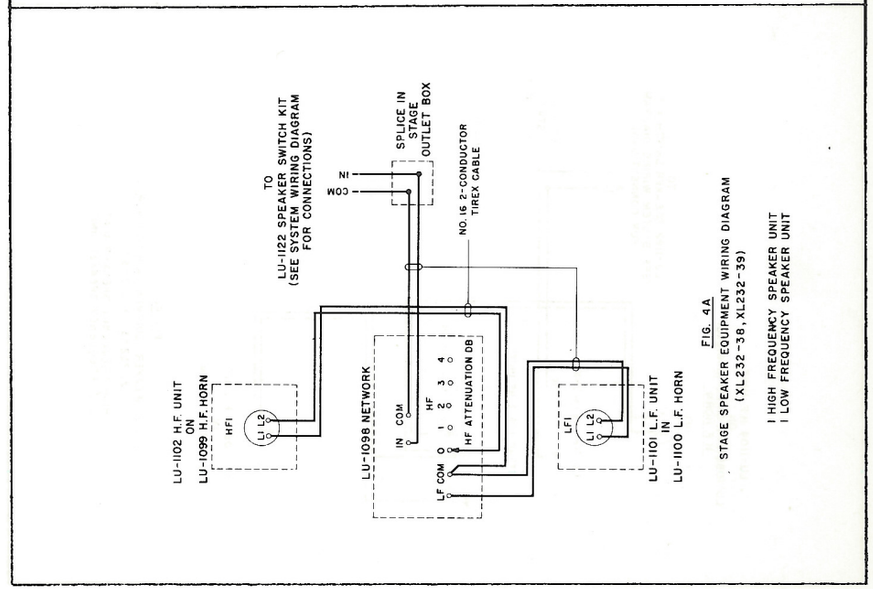

FIGURES 4A AND 4B

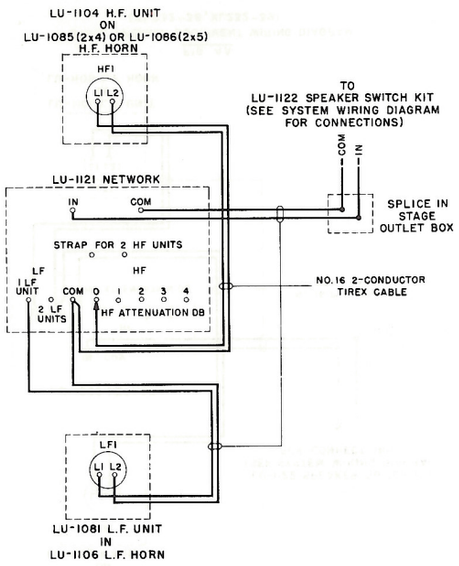

FIG. 4C

STAGE SPEAKER EQUIPMENT WIRING DIAGRAM
(XL232-311, XL233-311)

1 HIGH FREQUENCY SPEAKER UNIT
1 LOW FREQUENCY SPEAKER UNIT

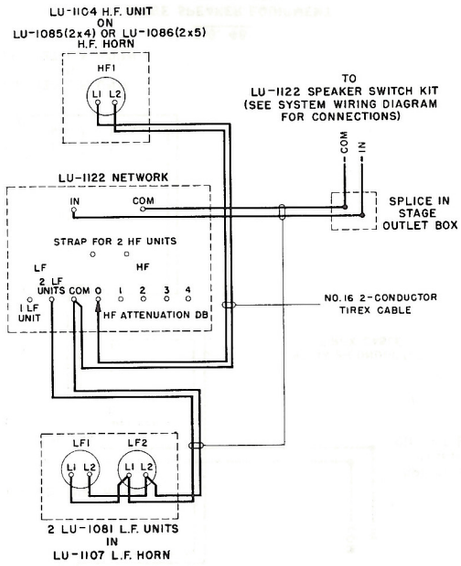

FIG. 4D

STAGE SPEAKER EQUIPMENT WIRING DIAGRAM
(XL232-312, XL233-312, XL236-312)

1 HIGH FREQUENCY SPEAKER UNIT
2 LOW FREQUENCY SPEAKER UNITS

FIGURES 4C AND 4D

Issued by
Engineering Department
Printed in U. S. A.

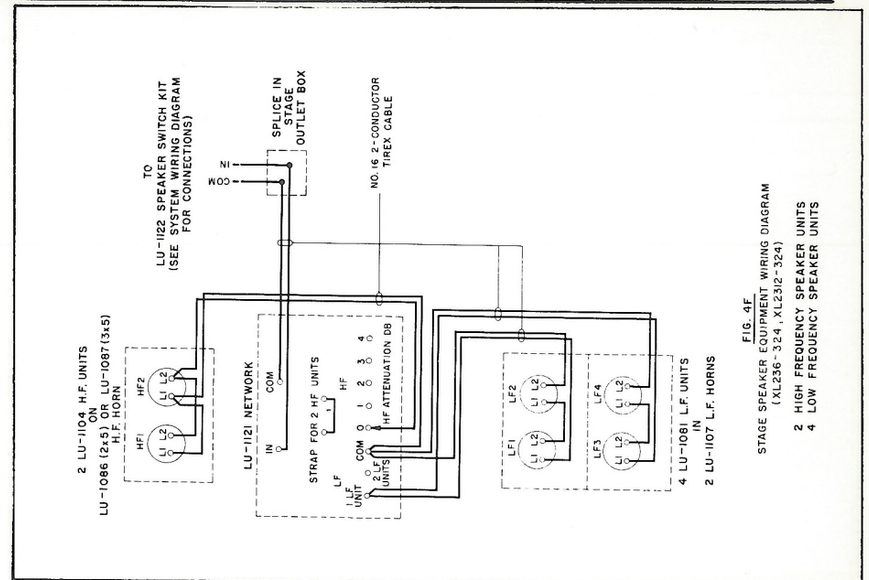

FIG. 4F
STAGE SPEAKER EQUIPMENT WIRING DIAGRAM
(XL236-324, XL2312-324)
2 HIGH FREQUENCY SPEAKER UNITS
4 LOW FREQUENCY SPEAKER UNITS

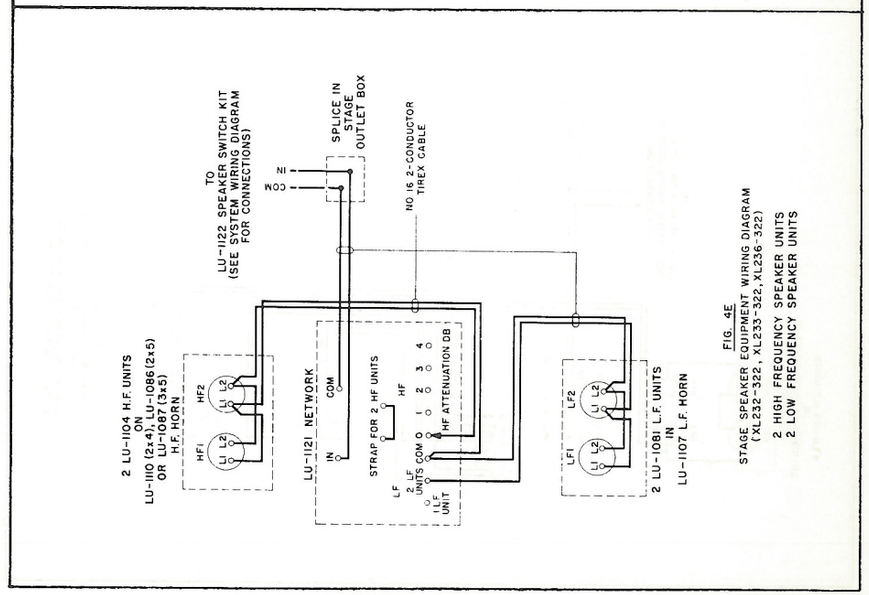

FIG. 4E
STAGE SPEAKER EQUIPMENT WIRING DIAGRAM
(XL232-322, XL233-322, XL236-322)
2 HIGH FREQUENCY SPEAKER UNITS
2 LOW FREQUENCY SPEAKER UNITS

FIGURES 4E AND 4F

ALTEC SERVICE CORPORATION
SIMPLEX
SOUND EQUIPMENT BULLETIN

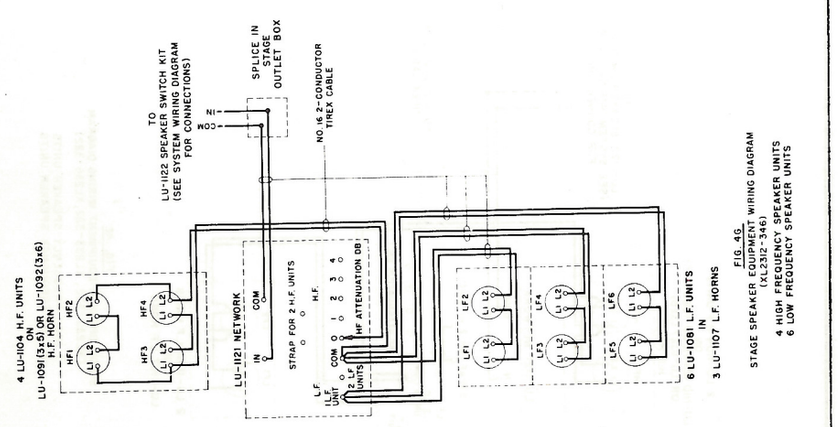

FIG. 4G
STAGE SPEAKER EQUIPMENT WIRING DIAGRAM
(XL2312-346)
4 HIGH FREQUENCY SPEAKER UNITS
6 LOW FREQUENCY SPEAKER UNITS

FIGURE 4G

Issued by
Engineering Department
Printed in U. S. A.

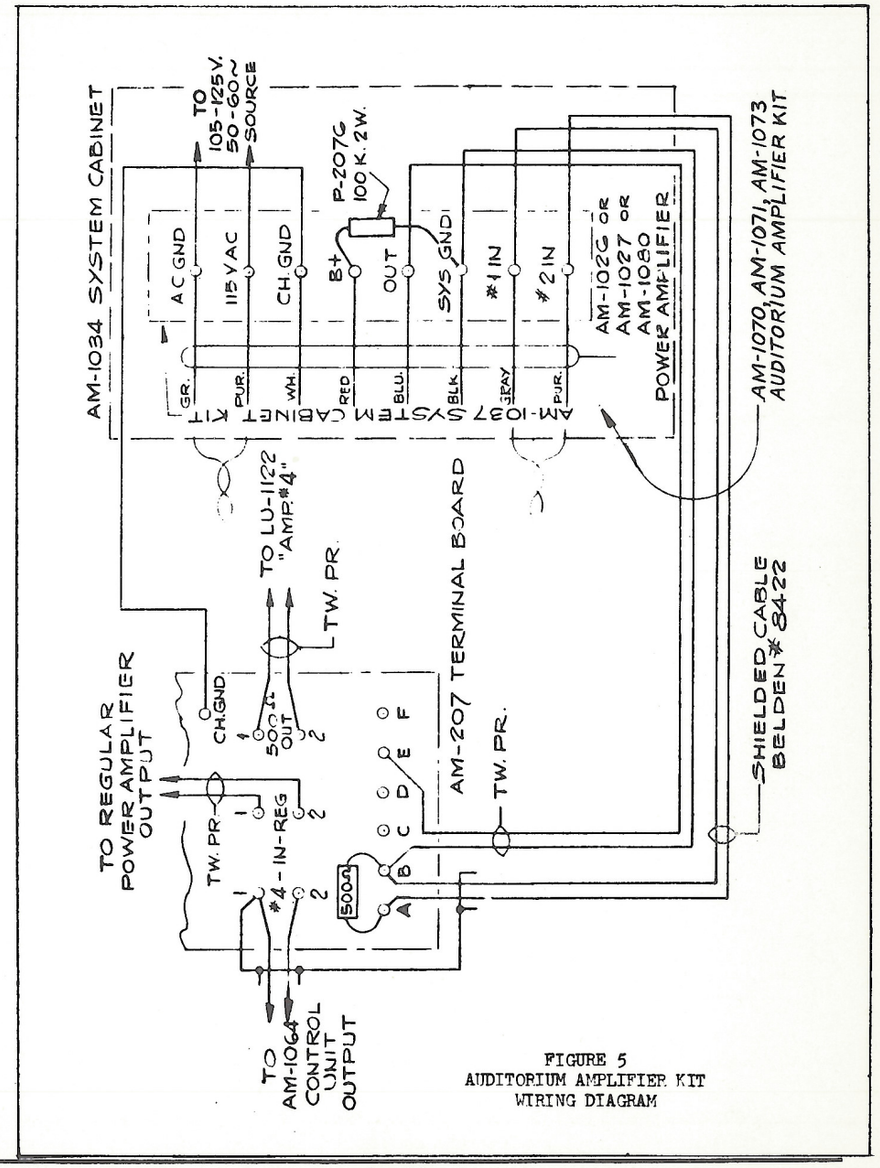

FIGURE 5
AUDITORIUM AMPLIFIER KIT
WIRING DIAGRAM

Issued by
Engineering Department
Printed in U. S. A.

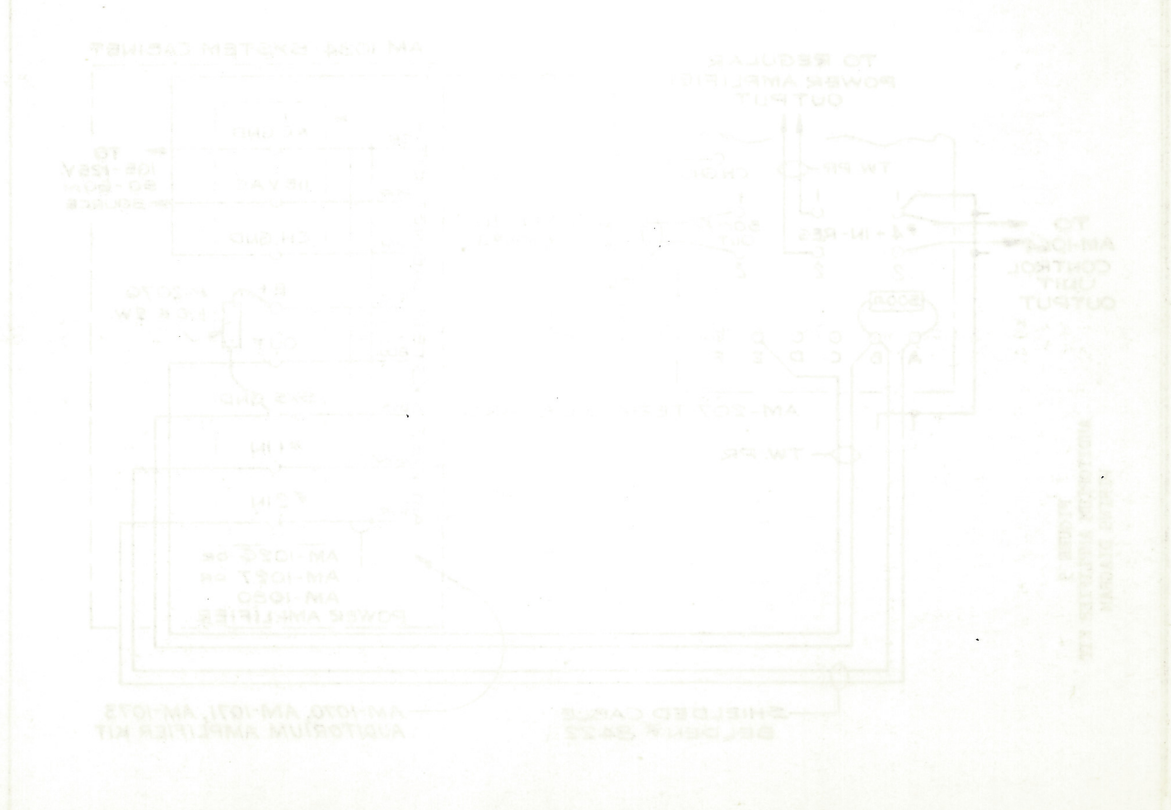

SECTION I

INSTALLATION OF EQUIPMENT

A. GENERAL

The Single Film Stereophonic Sound Systems should be installed in accordance with the instructions below. Figures 1 to 4 inclusive show typical arrangements to provide maximum ease of operation and servicing. In some instances, however, close adherence to the layouts shown may be impractical.

In any case, the various system components should not be mounted closer to each other than the minimum dimensions shown.

B. UNPACKING

1. Unpack the equipment only as required during installation, to avoid possible damage and the introduction of foreign material that may affect operation.

2. Inspect carefully during unpacking and remove any foreign material at once.

C. EQUIPMENT MOUNTING

1. Fasten all wall mounting equipment, outlet boxes, conduits and condulets to brick or concrete walls with bolts and expansion shields, to tile walls with toggle bolts and to gypsum blocks or transite walls with through bolts.

D. CONDUIT AND WIRING

1. Conduit sizes and wire sizes should be as specified on the appropriate associated drawings.

2. Conduit runs should be as short as possible.

3. Connections should be made in accordance with the associated drawings.

   NOTE:- The AC power supply wires may, if desired, be fastened under the terminal screws, using the P-2942 Cup Washers supplied with the cabinet kit.

4. Splices are to be made only as specified.

5. Microphone cable connections in the magnetic soundhead and pre-amplifier cabinet, should be made with the minimum of unshielded conductors exposed and these unshielded conductors twisted as close to the terminals as possible.

   CAUTION:- Unless this method of connection is followed carefully, noise and hum may be introduced into the system.

Issued by
Engineering Department
Printed in U. S. A.

February 1, 1954
Issue #1

E. AMPLIFIER EQUIPMENT

1. Mount the system cabinet in the location selected so that it is convenient for inspection and servicing and the controls are readily accessible and visible from the operating position at the projectors.

   NOTE:- The speaker switch kit is installed first, the cabinet kit second, followed by the control unit and amplifiers.

2. Install the speaker switch kit in the bottom section of the cabinet as follows:-

   a. Fasten the mounting plate to the upper four studs on the rear of the cabinet with the cable form at the left, using the screws supplied.

   b. Fasten the terminal strip to the lower four studs on the rear of the cabinet, using the screws supplied.

   c. Make all connections to the terminal strip per the system wiring diagram.

   d. Strap the Transformer Terminals in accordance with drawing W-1131 in the Operating Instructions, subject to Section II, paragraph K.

3. Install the cabinet kit in the system cabinet as follows:-

   NOTE:- The cabinet kit includes the terminal strips properly interconnected and the necessary mounting details.

   a. Position the terminal strips, having terminal designations beside the terminals, on the vertical mounting rails, so that the bottom of each is even with the top of the cable clamp.

   b. Secure each terminal strip with four H-2724 Screws, P-1146 Lockwashers and two P-2314 Clamping Plates.

   c. Make all external connections to the terminal strips per the system wiring diagram.

4. Install each unit in the system cabinet as follows, starting at the bottom.

   a. With the cabinet cover off, pull out both chassis slides, depress each locking lever so that it clears the stop screw and release, thereby preventing the slides from returning into the cabinet.

   b. Guide the chassis between the slides and position with the rear chassis support screws in the slots in each slide.

NOTE:- The rear chassis support screws depress the locking lever so that they clear the stop pins and the chassis may be pushed into the cabinet.

c. Push the chassis and slides in so that the front of the chassis rests on the crossbar of the cabinet, but the pivot mounting holes are still accessible.

d. Line up the pivot screw hole in the slide and chassis, insert a spacing washer between the chassis and slide and line up with the hole.

e. Insert the pivot screw and fasten with the nut.

NOTE:- The washer must be positioned so that it is free to turn after the nut is tightened.

f. Insert the cable form in the P-1066 Cable Clamp, (position to clamp the cable form at the lacing) and mount the cable clamp with an H-2723 Screw.

NOTE:- Be sure that there is no twist in the cable form that may tend to cause interference with the chassis.

g. Connect the cable form wires from each chassis to its associated terminal strip per the system wiring diagram.

F. TRIPLE CHANGEOVER CABINET

1. Mount one cabinet on the front wall of the Projection Room adjacent to each Projection Port and in such a location that the Projectionist can make the sound changeover at the operating position at each Projector.

2. The cabinets should be so located that the connecting conduit may be run between them without interference from other equipment that may be mounted on the front wall.

3. Make connections to the terminal strip per the system wiring diagram.

G. SYSTEM SELECTOR BOX

1. Wherever possible, mount on the front wall in a convenient location between machines, bearing in mind that this cabinet is used to select the type of reproduction:- optical, single film magnetic sound or dual film magnetic sound.

2. This unit selects any one of three types of sound reproduction:- optical, double film stereophonic or single film stereophonic. For either type of stereophonic operation, the regular sound system power amplifier usually drives the auditorium speakers. For the special condition, involving the use of a separate power amplifier to drive these speakers, refer to paragraph 8 below. The connections and

Issued by
Engineering Department
Printed in U. S. A.
February 1, 1954
Issue #1

strapping required for use with various types of sound systems are described below.

3. Simplex XL Sound Systems and other systems having these characteristics:-

500 ohm line between the Pre-Amplifier output and the Power Amplifier input:- one side grounded.

Power Amplifier with a nominal input level of 0 db/6 mw.

No DC voltage on the line between the Pre-Amplifier and the Power Amplifier.

a. Make external connections per the appropriate system wiring diagram. No internal strapping changes required.

4. Simplex Four Star Sound Systems and other Systems having these characteristics:-

High impedance line (10,000 to 20,000 ohms) between the Pre-Amplifier output and the Power Amplifier input:- one side grounded.

Power Amplifier with a nominal input level of 0 db/6 mw.

DC voltage on the line between the Pre-Amplifier and the Power Amplifier.

a. Remove the yellow wire between terminals "A" and "E".

b. Strap terminal "A" to terminal "C" and terminal "D" to terminal "E".

c. Connect the regular Pre-Amplifier output to terminals "REG IN 1" and "F" (instead of "REG IN 1" and "REG IN 2" as shown on the system wiring diagram).

d. Make all other connections per the appropriate system wiring diagram.

CAUTION:- Connect the ground side of all circuits to terminal "1" of each pair of terminals.

5. Systems having these Characteristics.

High impedance line (10,000 to 20,000 ohms) between the Pre-Amplifier output and the Power Amplifier input:- one side grounded.

Power Amplifier with a nominal input level of 0 db/6 mw.

No DC voltage on the line between the Pre-Amplifier and the Power Amplifier.

a. Remove the yellow wire between terminals "A" and "E".

b. Strap terminal "A" to terminal "C" and terminal "D" to terminal "E".

c. Make all external connections per the appropriate system wiring diagram.

CAUTION:- Connect the ground side of all circuits to terminal "1" of each pair of terminals.

6. Systems having a power amplifier with a Nominal Input Level of -20db or less.

a. Remove the yellow wire between terminals "A" and "E".

b. Determine the attenuation required so that normal setting of the volume control in this cabinet will be approximately in mid-position (refer to Section II, paragraph K), select the resistors from the table below and connect.

Attenuation db	R1 & R3 Ohms	R2 Ohms
-10	1,000	750
-20	620	2,400
-30	510	7,500
-40	510	24,000

Connect R1 to terminals "A" and "B"
R2 to terminals "A" and "E"
R3 to terminals "B" and "E"

c. Make all external connections per the appropriate system wiring diagram.

CAUTION:- Connect the ground side of all circuits to terminal "1" of each pair of terminals.

7. Systems having a Power Amplifier with a Balanced or Ungrounded input.

NOTE:- This connection will result in an insertion loss of approximately 14 db.

a. Remove the yellow wire between terminals "A" and "E".

b. Remove the strap between terminals "#4 IN 1" and "REG IN 1".

c. Strap terminal "A" to terminal "D" and terminal "C" to terminal "E".

d. Connect a 500 ohm, 1/2 watt resistor between terminals "A" and "B".

Issued by
Engineering Department
Printed in U. S. A.

February 1, 1954
Issue #1

e. At T1, remove the strap between terminals #5 and #6 and transfer the purple wire from terminal #5 to terminal #6.

f. Run a wire from T1, terminal #6, to terminal"#4 IN 1".

g. Make all external connections to the terminal strip per the appropriate system wiring diagram.

8. Additional Amplifier to Drive the Auditorium Speakers.

a. The AM-1070 Auditorium Amplifier Kit is used to provide separate amplifier to drive the Auditorium Speaker when it is difficult or undesirable to use the regular Power Amplifier for both optical sound reproduction and to drive the Auditorium Speakers. The changes are described below.

b. Remove the yellow wire between terminals "A" and "E".

c. Connect a 500 ohm, 1/2 watt resistor between terminals "A" and "B".

d. Install the terminal strip in the AM-1034 System Cabinet and make external connections to this terminal strip and the System Selector Box per Figure 5. Other connections should be made per the appropriate system wiring idagram.

e. Install the amplifier in the cabinet per paragraph E, 4, and connect the amplifier cable form wires to the terminal strip per Figure 5.

H. PRE-AMPLIFIER CABINET

1. Wherever possible, mount one cabinet on the front wall of the Projection Room adjacent to each Projector not less than three feet from the projector motors and picture changeovers, and so that it will be convenient for servicing.

2. In some instances, it may be necessary to improvise suitable mounting brackets to clear obstructions.

3. Make connections to the terminal strip per the system wiring diagram.

4. Plug a pre-amplifier into each of the four multi-conductor receptacles in each cabinet.

I. MAGNETIC SOUNDHEAD

1. Remove the upper magazine from the projector mechanism.

NOTE:- When the upper magazine is a Simplex XL, remove the pilot light cover plate and unsolder the wire from the toggle switch before removing the magazine.

2. Fasten the film slot closure plate to the bottom of the soundhead.

3. Remove the rear cover from the magnetic soundhead by loosening the two knurled captive screws.

4. Mount the soundhead on the top of the projector mechanism with the four socket head screws supplied.

   NOTE:- When the projector mechanism is other than Simplex XL, an adapter will be necessary and should be installed per the instructions packed with it.

5. Using a straight edge held against the face of the upper feed sprocket of the projector mechanism and extending into the magnetic soundhead, adjust the soundhead so that the straight edge just touches the sprocket in the magnetic soundhead. Also align the bottom edge of the magnetic soundhead with the top edge of the projector mechanism. Tighten the four mounting Screws.

6. Slide a flywheel on the lower and upper stabilizer shafts. Position so that the pin on the shaft is in alignment with the keyway in the hub of each flywheel and fasten securely with the screws supplied and replace the rear cover.

7. Modify each upper magazine per paragraph M below and mount on top of the magnetic soundhead with the screws previously removed.

   NOTE:- If the upper magazine is a Simplex XL, thread the wire previously removed through the soundhead, resolder to the toggle switch and replace the cover plate. If the magazine is other than Simplex XL, an adapter will be necessary and should be installed per the instructions shipped with it.

8. Remove the terminal strip cover, make all connections to the terminal strip per the system wiring diagram and replace the cover.

J. PRE-AMPLIFIER POWER SUPPLY

1. Mount the cabinet in the selected location and make connections to the terminal strip in accordance with the system wiring diagram.

2. Mount the power supply chassis on the back of the cabinet using the mounting screws provided and connect the cable form terminals to the terminal strip in accordance with the system wiring diagram.

3. Plug the two control units into the receptacles on the rear of the cabinet.

Issued by
Engineering Department
Printed in U. S. A.

February 1, 1954
Issue #1

K. AUDITORIUM SPEAKERS

1. Remove the cabinet cover from each cabinet, mount the cabinets in the selected locations, run the connecting conduit and wires.

   NOTE:- In some instances, it may be necessary to use spacers at the top of the LU-151 Cabinet to tilt it downward to improve distribution.

2. Fasten the speaker unit behind the grille on the cover and the matching transformer in a convenient location on the cover or in the bottom of the cabinet, using the screws supplied.

3. The primary windings of all matching transformers are connected in parallel across the line from the Speaker Switch Kit.

4. The number of watts per speaker will normally be the wattage rating of the power amplifier driving the speakers divided by the number of speakers.

   NOTE:- Normal level should be obtained with the volume control in the System Selector Box in mid-position. If, however, normal volume control setting is near either end, changes in the strapping of the matching transformer primary (see table in paragraph 7b below) should be made so that normal setting is near mid-position. Also, it may be necessary to change the primary strapping of some transformers to reduce the level of individual speakers. The line impedance, referred to in the following paragraph, should then be determined by the parallel resistance method.

5. The line impedance from the Speaker Switch Kit will usually be the primary impedance of the transformer, as strapped, divided by the number of transformers, which determines the strapping of T1 (P-3257 Transformer) in the Speaker Switch Kit (refer to drawing W-1131 in the Operating Instructions).

6. For example, if the power amplifier driving the speakers is rated at 40 watts, and there are 10 speakers, the power available for each speaker will be four watts. The primary winding of each matching transformer should then be straped for 1,250 ohms. The P-3257 Transformer secondary should be strapped for 78 ohms, that is, for the next higher power rating.

7. LU-150 Matching Transformer Strapping.

   a. Secondary - Strap terminals 9 and 10 and connect terminals 8 and 11 (8 ohms impedance) to the voice coil terminals of the speaker.

   b. Primary - Strap and connect per the following table.

Primary Impedance	Connect To	Strap	Power From 70 Volt Line
10,000 Ohms	1 - 6	3 to 4	1/2 Watt
7,500 Ohms	1 - 5	3 to 4	2/3 Watt
5,000 Ohms	2 - 5	3 to 4	1 Watt
2,500 Ohms	1 - 6	1 to 4 & 3 to 6	2 Watts
1,250 Ohms	2 - 5	2 to 4 & 3 to 5	4 Watts

8. LU-151 Matching Transformer Strapping.

   a. Secondary - Connect terminals S1 and S2 (8 ohms impedance) to the voice coil terminals of the speaker.

   b. Primary - Strap and connect per the table in the preceding paragraph 7b.

9. Fasten the cover to each cabinet when all connections have been made.

L. STAGE SPEAKER EQUIPMENT

1. Three identical two-way loudspeaker equipments, including networks, are to be located on the stage directly behind the screen.

   NOTE:- The stage must be level and rigid and support the weight of the speaker equipment.

2. One of these equipments is centrally located behind the screen, the other two to the left and right of center, approximately two-thirds of the distance from the center to the edge of the screen.

   NOTE:- The location of the left and right equipments may have to be adjusted in some installations to obtain complete coverage of the seating area and so that drapes, etc. will not interfere.

3. Assemble each low frequency horn component per the appropriate layout, fastening them together with the bolts supplied.

   NOTE:- The final position of each low frequency horn assembly, after tuning up is completed should be such that the high frequency horn is as close to the screen as is practicable.

4. Set a horn sled on top of each low frequency horn assembly and mount the high frequency horn.

   NOTE:- Hole locations are spotted on the horn sled for the various types of high frequency horns to aid in properly positioning the brackets and tilting arm, furnished to secure the horn to the sled.

Issued by
Engineering Department
Printed in U. S. A.

February 1, 1954
Issue #1

5. Fasten the horn throat and high frequency unit(s) to the horn, making sure that the throat and speaker(s) are in alignment before the stud nuts are tightened.

6. Initially, set the front edge of the leading cell of the high frequency horn. 2" in front of the low frequency horn (1" for Figure 2A) and tilt for proper distribution.

7. Remove the rear cover of the low frequency horn(s) and mount the low frequency speaker unit(s).

8. Mount a network on each of the three sets of low frequency horns in a convenient accessible location.

9. Make all connections per the appropriate speaker wiring diagram and replace the cover on all low frequency horns.

M. UPPER AND LOWER MAGAZINE MODIFICATIONS

1. Non-magnetic rollers are substituted for certain of the magnetic rollers used. The film used in the Single Film System has four magnetic sound tracks, which may be adversely affected, if these tracks contact magnetic materials.

2. Simplex XL 18" Magazines (G-2337 XL Magazine Roller Kit).

   a. Upper Magazine (refer to the XL Projector Mechanism Parts Catalogue, page 3-0).

      (1) Remove the P-1886 Roller Holder Right Cover Fastening Screw and the G-1880 Roller Holder Right Cover.

      (2) Replace two P-1873 Small Rollers with two P-3316 Small Rollers.

      (3) Reassemble, securing the G-1880 Roller Holder Right Cover with the P-1886 Roller Holder Right Cover Fastening Screw.

      (4) On installed magazines, cut off enough of the flanges of G-1880 and G-1881 so that the door of the Magnetic Soundhead closes.

      NOTE:- On new magazines, the portion of the flanges, that must be removed is pinned in place and can be pulled away.

   b. Lower Magazine (refer to the XL Projector Mechanism Parts Catalogue, page 3-2).

      (1) Remove the two P-1887 Roller Holder Fastening Screws and the Roller Holder Assembly from the magazine.

(2) Remove the two P-1557 Roller Holder Right Cover Fastening Screws and the G-1883 Roller Holder Right Cover.

(3) Replace the P-1873 Small Roller and the P-1568 Large Lower Roller with the P-3316 Small Roller and the P-3315 Large Roller respectively.

(4) Reassemble the Roller Holder, fastening the G-1883 Roller Holder Right Cover with the two P-1557 Roller Holder Right Cover Fastening Screws.

(5) Mount the Roller Holder Assembly in the magazine with the two P-1887 Roller Holder Fastening Screws removed under (1) above.

3. Simplex Regular 18" Magazines (G-2336 Regular Magazine Roller Kit).

a. Upper Magazine (refer to the XL Projector Mechanism Parts Catalogue, page 2-7).

(1) On the G-2108 Upper Magazine Adapter, remove the two P-2746 Roller Pivot Screws that mount the two P-2747 Small Rollers and remove the rollers.

(2) Install two P-3317 Small Rollers and secure them with the P-2746 Roller Pivot Screws previously removed.

b. Lower Magazine (refer to the Accessories Parts List, page 8).

(1) Remove six S-485-C Roller Pivot Screws that hold the three R-160-C Small Rollers and remove the rollers.

(2) Install three P-3317 Small Rollers and secure with the six S-485-C Roller Pivot Screws previously removed.

4. Simplex XL 25" Magazines (G-2338 25" Magazine Roller Kit).

a. Upper Magazine (refer to the XL Projector Mechanism Parts Catalogue, page 2-7).

(1) On the G-2108 Upper Magazine Adapter, remove the two P-2746 Roller Pivot Screws that hold the two P-2747 Small Rollers and remove the rollers.

(2) Install two P-3317 Small Rollers using the P-2746 Roller Pivot Screws previously removed.

b. Lower Magazine.

(1) Remove the nine Support Bracket Fastening Screws

Issued by
Engineering Department
Printed in U. S. A.

February 1, 1954
Issue #1

(P-1921) and separate the Support Bracket from the Magazine Case and Cover Assembly.

(2) Loosen the four Roller Holder Fastening Screws (H-2038 and H-2039).

(3) Remove the two Roller Holder Right Cover Fastening Screws (P-1557) and the Roller Holder Right Cover (G-1883).

(4) Replace the small and large Rollers (P-1873 and P-1568) respectively with P-3316 and P-3315 respectively.

(5) Reassemble, securing the roller holder right cover with the two Roller Holder Right Cover Fastening Screws (P-1557) previously removed.

(6) Tighten the four roller holder fastening screws to secure the roller holder assembly to the support bracket.

(7) Mount the magazine case and cover assembly on the support bracket with the nine bracket fastening screws previously removed.

N. XL OR FOUR STAR SOUND MECHANISM MODIFICATION (refer to the XL Sound Mechanism Parts Catalogue, page 5-1 or the Four Star Sound Mechanism Parts List) (G-2334 Sound Mechanism Kit).

1. The sound and holdback sprockets, which conform to the narrower perforations on the film, are substituted and nylon (non-magnetic) pad rollers replace the magnetic pad rollers currently used.

NOTE:- In the following paragraphs, the numbers in parenthesis apply to the Four Star Sound Mechanism.

2. Sprocket Replacement.

a. Remove the two H-1501 (SN-140) Stripper Fastening Screws from each stripper and each P-2211 (SN-125) Stripper Plate.

b. Remove the H-1502 (SN-144) Sound Sprocket Fastening Screw from the sound sprocket and replace the P-2197 (SN-122) Sound Sprocket with the P-3322 Sound Sprocket and secure with the H-1502 (SN-144) Screw previously removed.

c. Remove the H-1502 (SN-144) Holdback Sprocket Fastening screw and the P-2198 (SN-123) Holdback Sprocket and replace with the G-2331 Holdback Sprocket. Secure with the screw previously removed.

d. Mount the P-2211 (SN-125) Stripper Plates previously removed and fasten with the H-1501 (SN-140) Screws.

3. Pad Roller Replacement.

   a. Loosen the three H-2702 (SN-139) Pad Roller Stud Set Screws and remove the three G-1959 (SN-131) Pad Roller Studs and Knobs.

   b. Slide the pad rollers from each of these studs and substitute the P-3085 Nylon Pad Rollers.

      NOTE:- Any washers between the pad rollers and pad roller arms should be replaced in the same position when installing nylon pad rollers.

   c. Slide the pad roller stud and knob into the hole in the pad roller arm and secure with the H-2702 (SN-139) Screw previously loosened.

C. XL PROJECTOR MECHANISM MODIFICATION (G-2333 XL Projector Modification Kit)

1. Upper and lower sprockets, which conform to the narrower perforations on the film, are substituted. Nylon (non-magnetic) pad rollers replace the magnetic pad rollers currently used. Heat shields, to accommodate the increased picture size, are substituted and a support for 4" diameter projection lens is added.

2. For other than 4" diameter projection lenses, the lens support is not required. Spacers and/or adapters, obtainable from the lens manufacturer, provide for the attachment of the Cinemascope lens to the projection lens.

3. Upper and Lower Sprocket Replacement (refer to the XL Projector Mechanism Parts Catalogue, pages 1-18 and 1-28).

   a. Remove one of the P-1432 Stripper Fastening Screws on each sprocket assembly, loosen the other and rotate the stripper to clear the sprocket.

   b. Open the pad rollers.

   c. Remove P-1652 Sprocket Retaining Screw and slide the sprocket from the shaft.

   d. Slide the replacing G-2332 Sprocket on the shaft with the key pin and keyway in alignment and secure with the sprocket fastening screw.

   e. Insert the P-1432 Stripper Fastening Screw and tighten both screws.

4. Upper and Lower Feed Sprocket Pad Roller Replacement (see XL Projector Mechanism Parts Catalogue, pages 1-18 and 1-28).

Issued by
Engineering Department
Printed in U. S. A.

February 1, 1954
Issue #1

a. Open each of the pad rollers.

b. Loosen the P-1557 Stud Roller Set Screw (H-3707 in some mechanisms) in each assembly and remove the pad rollers.

c. Substitute P-3085 Nylon Pad Rollers and reassemble.

NOTE:- Any P-3066 Pad Roller Spacing Washers between the pad rollers and pad roller arms should remain in the same position when the pad rollers are replaced.

d. Position the pad roller arm adjusting screw on the sprocket assembly casting so that with two thicknesses of film between the sprocket and pad rollers, both pad rollers just rotate. Be sure that the adjusting screw locknut is then tightened securely.

5. Intermittent Sprocket Replacement (refer to XL Projector Mechanism Parts Catalogue, page 1-17).

a. Open the film trap door, remove the knurled trap door fastening nut at the top and bottom of the door and the door.

b. Loosen the single captive film trap fastening screw and remove the film trap.

c. Turn the framing knob clockwise (film side) until the P-1190 Stripper Fastening Screw is accessible. Remove the screw and the P-1593 Stripper.

d. Rotate the intermittent so that one of the index lines on the P-1938 Starwheel Shaft Collar is in alignment with the index line on the G-2144 Front Bearing Plate and retain this setting.

e. Remove the P-1601 Intermittent Sprocket Fastening Screw and the P-1602 Nut.

f. Loosen the two P-1971 Collar Set Screws and remove the P-1938 Starwheel Shaft Collar.

g. Remove the two P-1778 Front Bearing Plate Fastening Screws and the G-2144 Front Bearing Plate.

h. Remove the intermittent sprocket and substitute the G-2330 Sprocket.

NOTE:- Make sure that the "Simplex" trademark is direct reading when viewed from the outboard end of the sprocket. This method of assembly is necessary as the contact rings on either side of the sprocket are of different widths. These rings are so dimensioned that a minimum width film will not be less than the overall length of the sprocket, thereby avoiding the wearing of a groove on the inner contact ring.

i. Position the G-2144 Front Bearing Plate with the P-1778 Front Bearing Plate Fastening Screws finger tight.

j. Adjust G-2144, as required so that the bearing is precisely centered with respect to the intermittent shaft and tighten the fastening screws.

k. Fasten the intermittent sprocket to the shaft with the fastening screw and nut.

l. Slide the starwheel shaft collar on the shaft with one of its index lines in alignment with the index line on the front bearing plate.

m. Pull the sprocket forward and at the same time, press the collar inward so that there is just perceptible end play.

n. Tighten the collar fastening screw securely and check for just perceptible end play.

6. Film Trap Heat Shield Replacement (refer to the XL Projector Mechanism Parts Catalogue, page 1-2).

a. Remove the P-1703 Heat Shield Fastening Screws and the G-1908 Heat Shield.

b. Substitute the G-2329 Heat Shield and secure with the P-1703 Fastening Screws.

c. Substitute the G-2323 Aperture Plate for that previously used.

d. Reinstall the film trap and align the intermittent sprocket and film guide edge as follows:-

(1) Place a straight edge along the guide edge of the film trap and extend to the intermittent sprocket.

(2) Loosen the intermittent sprocket fastening screw and slide the sprocket on the shaft as required, until the outboard face of the sprocket is in exact alignment with the straight edge.

(3) Tighten the sprocket fastening screw securely.

7. Film Trap Door Intermittent Sprocket Tension Shoe Replacement (refer to XL Projector Mechanism Parts Catalogue, page 1-4 and page 2-20 of this manual).

a. Remove the P-1676 Tension Shoe Spring Fastening Screw and the tension shoe assembly.

b. Replace with the G-2350 Tension Shoe Assembly, making

sure that the curved portion of the shoe is in the same position as shown on Figure 6, and the P-1676 Screw finger tight.

c. Install the film trap door, close it slowly and adjust the tension shoe assembly until the outboard edge of the shoe and the outboard face of the intermittent sprocket are in exact alignment.

d. Tighten the P-1676 Screw securely.

8. Heat Shield Replacement (refer to XL Projector Mechanism Parts Catalogue, pages 1-14 and 1-28).

a. Loosen the G-1909 Spot Sight Box Fastening Screw, remove the P-1758 Spot Sight Box Fastening Nut and the Spot Sight Box (XL Projector Mechanism Parts Catalogue, page 1-28).

b. Loosen the two dowser pivot clamp set screws and withdraw the flexible shaft from the hole in the dowser pivot.

c. Remove the five P-1557 Rear Cover Fastening Screws and the rear cover.

d. Remove the two P-1527 Rear Heat Shield Fastening Screws and the P-1992 Heat Shield.

e. Substitute the P-3314 Rear Heat Shield and secure with the two P-1527 Screws.

f. Remove the two P-1940 Front Heat Shield Fastening Screws and the P-1982 Heat Shield.

g. Substitute the P-3312 Heat Shield and secure with the P-1940 Screws.

NOTE:- Make certain that the heat shield is installed with the thinner wall toward the non-operating side.

h. Mount the rear cover and fasten with the five P-1557 Screws.

i. Slide the flexible shaft into the hole in the dowser pivot. Position the flexible shaft so that the dowser completely covers the aperture in down position and is completely clear of the aperture in the up position and tighten the two clamping screws.

9. Spot Sight Box Heat Shield Replacement (refer to XL Projector Mechanism Parts Catalogue, page 1-28).

a. Remove the three P-1857 Heat Shield Fastening Screws and the P-1856 Heat Shield.

b. Substitute the P-3313 Heat Shield and fasten with the P-1857 Screws.

c. Reinstall the spot sight box.

10. Lens Holder Modification (refer to XL Projector Mechanism Parts Catalogue, page 1-20 and **Figure 7** of this **bulletin**) (G-2335 Lens Mounting Kit).

NOTE:- Required when a 4" diameter projection lens is used. This modification supports and locates rotationally the 4" Cinemascope lens. A spacer clamp, obtainable from the lens manufacturer, will be required to attach the Cinemascope lens to the projection lens. The spacer clamp will act as a stop ring when 5-1/4 to 5-3/4" projection lenses are used. The regular G-2161 Lens Stop Ring may be used with lenses larger than 5-3/4".

a. Remove the projection lens.

b. Loosen The P-1433 Lens Holder Guide Clearance Adjusting Screw.

c. Remove the two P-1551 Upper Guide Bracket Fastening Screws and the P-2008 Mounting Bracket (including the P-1549 Upper Lens Holder Guide). Discard P-1549 and P-2008 only.

d. Slide the P-3305 Guide Stud into the P-3309 Bracket and fasten with the P-1462 Screw removed under "c" above.

e. Slide the P-3307 Support Rod into the P-3309 Bracket and fasten with P-1462 Screw contained in the modification kit.

f. Fasten the Bracket Assembly to the Projector with the two P-1551 Bracket Fastening Screws removed under "c" above, and with the bracket as high as possible. Be sure that the P-3305 Guide Stud slides into the guide on the top of the P-1550 Lens Holder.

g. Slide the G-2327 Lens Support Ring over the Cinemascope lens to the shoulder and tighten the lock ring fastening screw.

h. Using the spacer clamp provided by the manufacturer, attach the Cinemascope lens to the projector lens to be used.

i. Slide this lens combination into the XL Lens Holder with the G-2327 Lens Support Ring Roller sliding on the P-3307 Support Rod.

j. Loosen the two P-1551 Bracket Fastening Screws and adjust the P-3309 Bracket so that the lens combina-

tion slides in and out of the lens holder as the roller on top of the G-2327 Lens Support Ring is rotated.

NOTE:- It may be necessary to loosen the four P-1551 Lower Lens Holder Bracket Fastening Screws and adjust the positioning of the G-2143 Lower Lens Holder Guide Bracket.

k. After all adjustments are made and all mounting screws tightened, rotate the lens focusing knob and tighten the P-1433 Screw so that there is smooth, uniform travel throughout the range of adjustment without binding or excessive looseness.

SECTION II

ADJUSTMENTS AND REPLACEMENTS

A. GENERAL

The adjustments are rapidly made and the utmost in simplicity of replacements has been attained by quickly removable units and components.

B. FOUR TRACK MAGNETIC SOUND MECHANISM - (Figure 9).

1. Pad Roller Assembly Replacement.

   a. Open the Pad Roller, compress the actuating spring so that the small hole in the forked spring guide is accessible and pass a pin (paper clip is satisfactory) through this hole to relieve the spring tension.

      NOTE:- Before removing the Lower Pad Roller Assembly, remove the Lower Tension Roller Fastening Screw and the Lower Tension Roller.

   b. Remove the Pad Roller Assembly Fastening Screw and the Pad Roller Assembly.

   c. Replace parts as necessary, reassemble, remove the pin and adjust the Pad Roller clearance per the following paragraph.

2. Pad Roller Replacement.

   a. Open the Pad Roller.

   b. Loosen the Pad Roller Stud Set Screw in the Pad Roller Arm Bracket.

   c. Remove the Pad Roller Stud and Pad Roller.

   d. Replace parts as necessary and reassemble.

      NOTE:- Position the Pad Roller Stud so that the Pad Roller rotates freely before tightening the set screw.

e. Adjust the clearance between the Pad Roller and Sprocket, as follows:-

CAUTION:- The Upper and Lower Pad Rollers must be adjusted as described to minimize the possibility of film damage. Under normal operating conditions these pad rollers will not rotate. They should not be adjusted in an attempt to make them rotate.

(1) Thread two thicknesses of film on the sprocket and close the Pad Roller.

(2) Loosen the Pad Roller Arm Adjusting Screw Locknut and position the Pad Roller Arm Adjusting Screw so that the Pad Roller rotates freely.

(3) Tighten the Pad Roller Arm Adjusting Screw Locknut and check the adjustment.

3. Sprocket Replacement.

a. Open the Pad Rollers.

b. Remove the Sprocket Fastening Screw and the sprocket. Be sure that the spring washer and thrust washer behind the sprocket remain on the stud.

c. Replace parts as necessary and reassemble.

4. Upper or Lower Guide Roller Replacement.

a. Remove the Guide Roller Fastening Screw and the Guide Roller. Be sure that the washers behind the Guide Rollers remain on the stud.

b. Replace parts as necessary and reassemble, making sure that the Guide Roller rotates freely.

5. Upper or Lower Tension Roller Replacement.

a. Remove the Roller Fastening Screw and the Roller. Be sure that the washers behind the Tension Rollers remain on the stud.

b. Replace parts as required and reassemble, making sure that the Roller rotates freely.

c. Adjust per the following paragraph if required.

6. Upper and Lower Tension Roller Adjustment.

a. With film running through the soundhead, the center of the Upper and Lower Tension Rollers should be equidistant from the center of the Upper and Lower Stabilizer Drum shafts respectively.

b. Adjust as follows:-

(1) Loosen the Tension Roller Adjustment Locking Screw one quarter turn;

Issued by
Engineering Department
Printed in U. S. A.
February 1, 1954
Issue #1

(2) Rotate the Tension Roller Adjusting Screw until the Tension Rollers are in proper position and tighten the Tension Roller Adjustment Locking Screw.

7. Upper Or Lower Stabilizer Drum Replacement.

a. Remove the Flywheel Fastening Screw, Washer and the Flywheel on the non-operating side.

b. Remove the Pin, Flat Washer, Spring Washer and Thrust Washer from the shaft.

c. Withdraw the Stabilizer Drum and shaft from the operating side carefully in view of the ball bearings at both ends of the shaft.

d. Replace parts, as required, and reassemble.

8. Magnetic Pickup Head Replacement.

a. Remove the Lateral Adjustment Locking Screw and the Lateral Adjusting Knob.

b. Disconnect the Cable Connector from the Magnetic Head and slide the Magnetic Head in its Bracket from the mounting stud.

c. Remove the four Magnetic Head Mounting Screws and the shield and head from the bracket.

d. Replace the head, reassemble and adjust per the following paragraph.

9. Magnetic Pickup Head Adjustment.

NOTE:- Magnetic Soundheads are shipped with the Magnetic Pickup Head precisely adjusted. While the adjustment should be checked at installation, the adjustment procedure below must be followed exactly when a Magnetic Pickup Head is replaced.

a. The outputs of all Pre-Amplifiers must be precisely balanced (for each machine and between machines) by adjustment of the Magnetic Pickup Head and the gain of the Pre-Amplifiers. When it is difficult to obtain a balance on the fourth track of either machine, a balance between machines should be obtained.

b. The following adjustments apply to the Magnetic Pickup Head, but, since the balancing measurements are made at the output of the Pre-Amplifiers, the gain of each Pre-Amplifier effects individual balancing as well as the balance between machines. Accordingly, gain adjustment of each Pre-Amplifier will usually have to be made in conjunction with the adjustment of the Magnetic Pickup Head.

c. These adjustments must be precisely made in the order listed and the procedure in paragraph C below also followed to obtained the final exact balancing required.

d. Visual Preliminary Lateral Adjustment.

(1) Thread a four-track magnetic sound film in the soundhead.

(2) Loosen the Lateral Adjustment Locking Screw and turn the Lateral Adjusting Screw until track #1 on the film and on the magnetic pickup head are in alignment visually.

(3) Tighten the Lateral Adjustment Locking Screw.

e. Pressure Adjustment.

(1) Thread a 1 KC (4-track level balance) test film in the soundhead.

NOTE:- This film loop is threaded in the normal manner except that it is routed over (instead of under) the Upper Guide Roller and around the Upper Feed Sprocket in the Projector Mechanism.

(2) Turn the motor manually, check the running of the film and turn the motor switch ON.

(3) Loosen the Pressure Adjustment Locking Screw approximately one-half turn.

(4) Rotate the Pressure Adjusting Screw so that the film runs smoothly off the Upper Stabilizer Drum without any tendency to ride up on either of the flanges.

(5) Tighten the Pressure Adjustment Locking Screw.

f. Final Lateral Adjustment.

(1) With the 1 KC film loop running, loosen the Lateral Adjustment Locking Screw.

(2) Connect an AC voltmeter (1,000 ohms/volt sensitivity or better) across terminals 1 and 2 (output) of each of the four Pre-Amplifiers successively and note the readings.

(3) Turn the Lateral Adjusting Screw so that all voltage readings are as nearly uniform as possible.

Issued by
Engineering Department
Printed in U. S. A.
February 1, 1954
Issue #1

NOTE:- In some instances, it may be difficult to obtain the same reading on the fourth (effects) track. The output of the fourth track of both machines should then be the same.

(4) Adjust the gain of each Pre-Amplifier as required, per paragraph C below.

g. Azimuth Adjustment.

(1) Thread an 8 KC (4-track azimuth) test film in the same manner as the 1 KC test film.

(2) With the film running, loosen the Azimuth Adjustment Locking Screw approximately one-half turn.

(3) Connect an AC voltmeter (1,000 ohms/volt sensitivity or better) across terminals 1 and Z (output) of each of the four Pre-Amplifiers successively and note the readings.

(4) Turn the Azimuth Adjusting Screw so that all voltage readings are the same.

NOTE:- In some instances, it may be difficult to obtain the same reading on the fourth (effects) track. The output of the fourth track of both machines should then be the same.

(5) Adjust the gain of each Pre-Amplifier, as required, per paragraph C below.

(6) Tighten the Azimuth Adjustment Locking Screw.

h. The Lateral and Azimuth adjustments are interacting. Paragraphs c and d above should be repeated and paragraph C below followed until all voltage readings are the same on both adjustments.

C. PRE-AMPLIFIER

1. Outputs of all Pre-Amplifiers associated with both machines must be balanced. Paragraph B, 9 above describes the adjustments required to equalize the outputs of the Magnetic Soundhead assuming that the Pre-Amplifiers themselves are balanced. Since the gain setting of the Pre-Amplifiers will affect this balancing, the adjustments of the Magnetic Soundhead and of the Pre-Amplifier are interacting and alternate adjustments of both are necessary to obtain exact balancing.

2. Initially set each Pre-Amplifier gain control, R-10, in mid-position.

3. With a 1 KC test film running, connect an AC voltmeter (1,000 ohms/volt or better) across the output of each Pre-Amplifier successively and note the reading.

4. Adjust R-10 of each Pre-Amplifier so that all readings are the same for all Pre-Amplifiers on both machines.

NOTE:- It may be difficult to balance the fourth (effects track) Pre-Amplifier with the other three. In such cases, balance between machines.

D. TRIPLE CHANGEOVER CABINET

1. Changeover Switch Removal.

a. Depress the Changeover Button and rotate so that the set screw is accessible inside the cabinet.

b. Loosen the Set Screw and slide the button from the switch shaft. Retain the spring.

c. Through the hole in the Cabinet Cover, remove the Changeover Switch Fastening Nut.

d. Remove the Switch from the Bracket and disconnect the wires.

e. Reconnect the wires to the replacing Switch, check the adjustment per the following paragraph and mount the Switch.

2. Changeover Switch Adjustment.

a. Remove the Switch per the preceding paragraph.

b. Loosen the Release Coil Fastening Screw on the Bracket and adjust the position of the Release Coil so that the Latching Spring engages the Latch on the Release Coil Armature with just slight over-travel when the shaft is depressed to its limit. Tighten the fastening screw.

NOTE:- The Release Coil must be positioned so that all making contacts close with slight follow as the Latching Spring locks up. When the Latching Spring is released by moving the armature toward the coil, all making contacts should have slight follow.

3. System Gain Adjustment (AM-202 Only).

a. Terminals 0, -6 and -12 provide fixed system gain attenuation in db.

b. Set the Volume Control in each Changeover Cabinet in mid-position and reconnect the wire (shipped connected to the -6 db terminal) as required to give normal auditorium volume.

Issued by
Engineering Department
Printed in U. S. A.

February 1, 1954
Issue #1

4. High Frequency Equalization.

   a. A Kit of Capacitors, that may be substituted for C1 to C6 inclusive, provide flexible adjustment of the high frequency response.

   b. Values of these capacitors should be established per paragraph K.

E. POWER AMPLIFIER

1. Output Transformer Connection.

   a. Connect the blue wire to the terminal of T2 in accordance with the following table. The yellow wire should not be moved.

Amplifier Per Channel	Connect to T-2 Terminal	No. of LF Speaker Units
1 AM-1027	16 Ohm	1
1 AM-1027	8 Ohm	2
1 AM-1026	16 Ohm	4
1 AM-1026	8 Ohm	2
1 AM-1026	32 Ohm	4 or 6

2. Power Transformer Strapping.

   a. At T3, the green wire should be connected in accordance with the following table for the average line voltage during operating hours.

Average Line Voltage	Connect to T3 Tap
120-130	125 Volt
110-120	115 Volt (Connection as shipped)
100-110	105 Volt

   NOTE:- Average line voltage is the average of line voltage readings taken during operating hours. If the average line voltage is above or below the above limits, the cooperation of the Power Company should be requested to bring the voltage within the recommended 105-125 volt limits.

3. Tube Testing.

   a. The meter on the front panel of each amplifier, together with the Selector Switch serves to test the input and output tubes.

   b. On the AM-1026 Amplifier, set the Selector Switch in position "1" to test V-1 and V-2, position "2" to test V-4 and position "3", to test V-5. If the pointer of the meter is outside the green block, a defective tube is indicated and should be replaced immediately.

NOTE:- Normal setting of the Selector Switch is position "1".

c. On the AM-1027 Amplifier, set the selector switch in position "1" to test V-1, position "2" to test V-3 and position "3" to test V-4. If the pointer of the meter is outside the green block, a defective tube is indicated and should be replaced immediately.

NOTE:- Normal setting of the Selector Switch is position "1".

4. Replacement.

a. Disconnect each of the cable form wires from the terminal strip.

b. Remove the cable clamp.

c. Withdraw the amplifier until the pivot screws are accessible.

d. Remove the pivot screws and nuts and spacing washers.

e. Remove the Amplifier from the cabinet, install the replacing Amplifier and reconnect the wires.

F. PRE-AMPLIFIER POWER SUPPLY

1. Power Transformer Strapping.

a. At T1, the green wire should be connected in accordance with the following table for the average line voltage during operating hours.

Average Line Voltage	Connect to T3 Tap
120-130	125 Volt
110-120	115 Volt (Connection as shipped)
100-110	105 Volt

NOTE:- Average line voltage is the average of line voltage readings taken during operating hours. If the average line voltage is above or below the above limits, the cooperation of the Power Company should be requested to bring the voltage within the recommended 105-125 volt limits.

2. Heater Supply Adjustment.

a. With all Pre-Amplifiers operating, connect a 20,000 ohm/volt voltmeter across terminals "-19V DC" and "+19V DC" and adjust R4 until the reading is exactly 19 volts DC.

Issued by
Engineering Department
Printed in U. S. A.

February 1, 1954
Issue #1

3. Replacement.

   a. Disconnect each of the cable form wires from the terminal strip.

   b. Remove the cable clamp.

   c. Remove the four Power Supply Fastening Screws and the Power Supply.

   d. Install the replacing unit and reconnect the wires.

G. CONTROL UNIT

1. These units are accurately adjusted at the factory and under normal conditions adjustment should not be necessary. However, the performance should be checked at installation as described below.

2. Thread a mixed 1 KC and 12 KC test film in the soundhead in the same manner as described in paragraph B,9,e above.

3. Set the Monitor Selector Switch on the Monitor Control Panel in position #4.

4. With the film running, listen in the System Monitor for the 1 KC signal followed by a silent interval. Proper operation is indicated by clean starting of the 1 KC signal with no "scratchy" sounds caused by bouncing of the relay contacts. Intervals between the 1 KC signals should be completely "dead" with no audible film noise.

5. If adjustment is required, turn R-1 (center hole on the front of the Control Unit) until the operation described in the previous paragraph is obtained.

H. LU-1121 NETWORK

1. High Frequency Speaker Matching.

   a. Strap terminals designated "Strap for 2 HF Units", only when there are two high frequency units in each stage speaker equipment.

   b. Do not strap for one or four high frequency units.

2. High Frequency Speaker Balancing.

   a. Terminals designed "HF Attenuation db 0-1-2-3-4" provide adjustable attenuation of each group of High Frequency Speakers up to 4 db in one db steps.

   b. Connect the wire from the HF Speaker Units initially to terminal "2" and determine the final connection per Section II, paragraph K.

3. Low Frequency Speaker Matching.

   a. Connect the wire from the Low Frequency Speakers to terminal "2 LF" when there are two Low Frequency Units in each stage speaker equipment.

   b. Connect wires from the Low Frequency Units to terminal "1 LF" for 1, 4 or 6 Low Frequency Units.

I. AM-1054 MONITOR AMPLIFIER AND CONTROL PANEL

1. Emergency Monitor Volume Control Setting.

   a. Adjustable Resistor R1, provides pre-set monitor speaker volume when the Monitor Amplifier is "OFF" or has been removed and the Monitor Volume Control is not effective.

      NOTE:- When the Monitor Amplifier is "OFF", R1 provides pre-set monitor volume automatically.

   b. Turn Monitor Amplifier AC Switch "OFF".

   c. Disconnect wires from "SPKR" and "15 Ohm" terminals.

   d. Strap "SPKR" and "15 Ohm" terminals.

   e. Adjust R1 for satisfactory monitor volume with main System Volume Control at normal setting.

2. Monitor Amplifier Removal.

   a. Turn Monitor AC Switch on panel "OFF".

   b. Disconnect the Monitor Amplifier cable form wires from the terminal strip.

   c. Remove the four Monitor Amplifier Mounting Screws and the Amplifier.

      NOTE:- Strap terminal "SPKR" and "15 Ohm" for emergency monitor sound until the monitor amplifier is replaced.

3. Replacement of Monitor Amplifier and Control Panel.

   a. Disconnect each one of the cable form wires from the terminal strip.

   b. Remove the cable clamp.

   c. Withdraw the unit until the pivot screws are accessible.

   d. Remove the pivot screws, nuts and spacing washers.

Issued by
Engineering Department
Printed in U. S. A.

February 1, 1954
Issue #1

e. Remove the unit from the cabinet and install the replacing unit and reconnect the wires.

J. SPEAKER SWITCH KIT

1. Matching Transformer Strapping.

a. T1 should be strapped in accordance with the tabulation on drawing W-1131, subject to the number and type of auditorium speakers used, as described in the Installation Instructions, Section I, paragraph K.

2. Replacement.

a. Remove all external wires connected to the terminal strip.

b. Remove the four terminal strip mounting screws and the four chassis mounting screws in the unit.

c. Install the replacing unit and reconnect the external wires.

K. STAGE SPEAKER EQUIPMENT

1. Make careful listening tests throughout the auditorium and adjust the tilt and angle of each of the three High Frequency Horns to obtain uniform distribution of sound throughout the auditorium.

2. Using a suitable test film, move each High Frequency Horn backward and forward in small steps, instantly reversing the connections to the High Frequency Unit in each position.

NOTE:- Since the reversal of connections must be instantaneous for critical listening, a reversing switch with long leads will be very useful.

3. As determined by listening in the auditorium, the best position of each High Frequency Horn is established when the greatest difference in sound quality is observed upon reversal of connections.

4. Again reverse the connections, the proper connection being that which fills in the mid-range sound giving best quality. Make this connection permanent.

NOTE:- When these connections and the position of each High Frequency Horn are correct, screen characters appear to be speaking from the screen rather than behind or in front of it and high frequency sounds are clean and clear.

5. Also listen throughout the auditorium for echoes, dead spots and reflections from the walls and ceiling. Frequently tilting or angling one or more of the high frequency horns with respect to the auditorium or even moving one of the three horn assemblies slightly, will change the reflection pattern so that there will be uniform level and high quality sound over the entire auditorium.

NOTE:- Since the final frequency response adjustment (see the following paragraph) may have some effect on the reflection pattern, this particular adjustment may be deferred until the frequency response has been established.

6. After all adjustments have been made, fasten the horn sled to the top of the Low Frequency Horn and make sure that all connections and all fastening bolts and nuts are tight.

L. SYSTEM FREQUENCY RESPONSE

1. After the electrical and acoustic phasing have been completed, further listening tests should be made as a preliminary to the adjustment of the frequency response of the system.

2. Selection of the frequency response that will give the highest quality sound reproduction in the auditorium is of extreme importance. The acoustic characteristics of auditoriums vary widely and therefore, careful listening tests should be made and the response changed as necessary.

3. All High Frequency Response adjustments are made in the AM-202 Triple Changeover and Warping Cabinet by the selection of the values of C1 to C6 inclusive, listed in Figure 8 from the Kit supplied.

4. The frequency response of each of the three channels should be the same.

Issued by
Engineering Department
Printed in U. S. A.

February 1, 1954
Issue #1

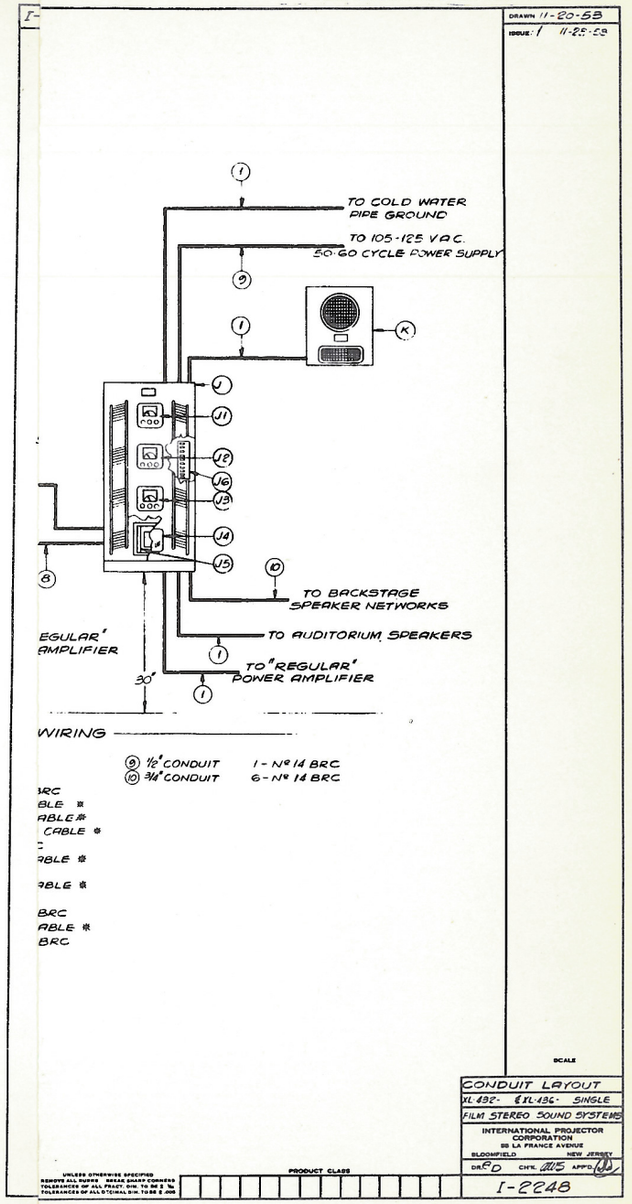

FIGURE 1

XL432 & XL436 TYPE SINGLE FILM
SIMPLEX STEREOPHONIC SOUND SYSTEMS
CONDUIT LAYOUT

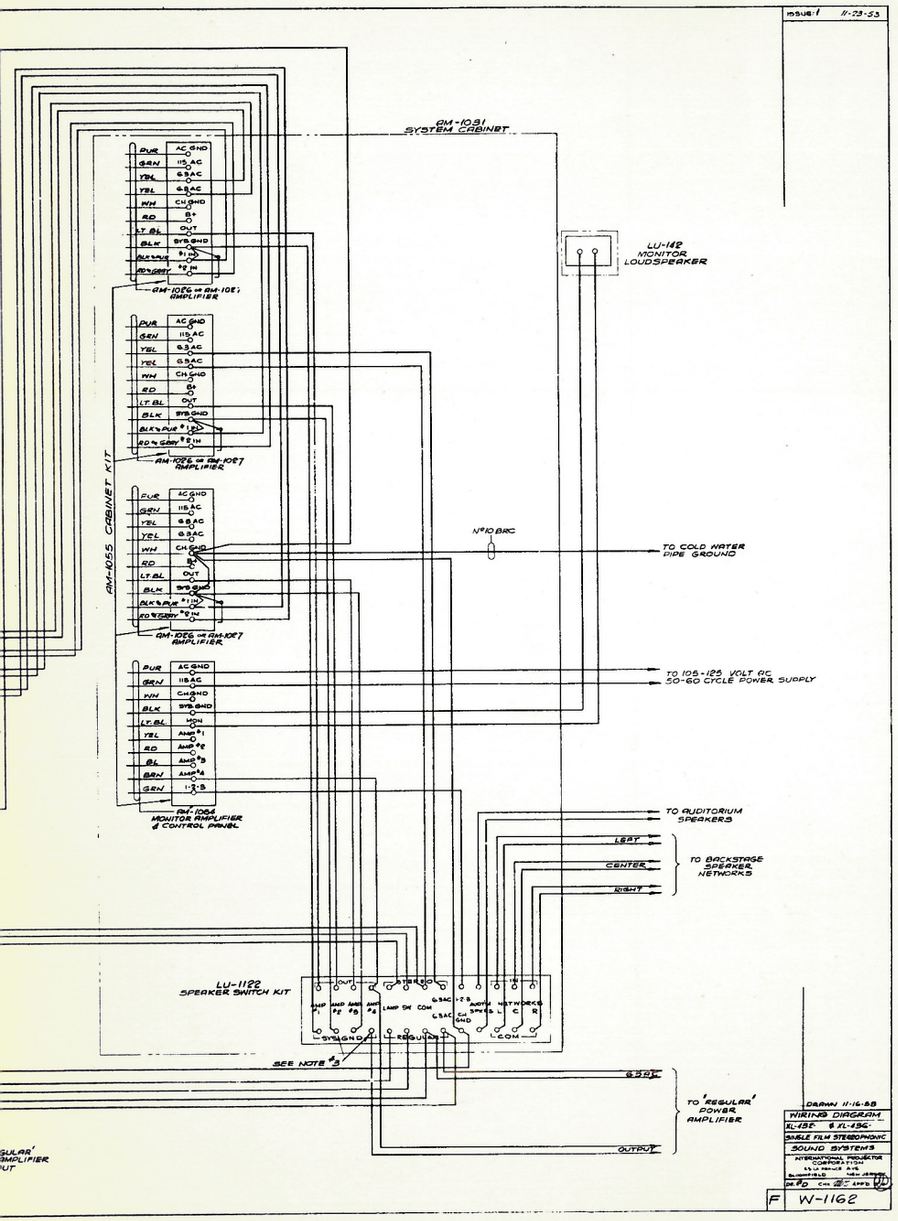

FIGURE 3

XL432 & XL436 TYPE SINGLE FILM
SIMPLEX STEREOPHONIC SOUND SYSTEMS
WIRING DIAGRAM

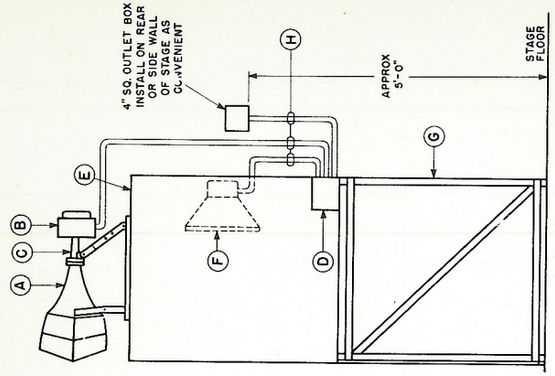

Ⓐ HIGH FREQUENCY HORN LU-1085 (2 x 4) OR LU-1086 (2 x 5) (17"H x 30"W x 27"D) 176 LBS. WITH UNIT)
Ⓑ LU-1104 HIGH FREQUENCY UNIT
Ⓒ LU-2062 HORN THROAT (LU-1085) LU-2063 HORN THROAT (LU-1086)
Ⓓ LU-1121 NETWORK
Ⓔ LU-1106 LOW FREQUENCY HORN (42"H x 77"W x 35"D) (500 LBS., 1 HORN WITH 1 UNIT)
Ⓕ LU-1081 LOW FREQUENCY UNIT
Ⓖ LU-1108 LOW FREQUENCY HORN STAND
Ⓗ NO.16 2-CONDUCTOR TIREX CABLE

FIGURE 2B
STAGE SPEAKER EQUIPMENT LAYOUT
1 HIGH FREQUENCY UNIT
1 LOW FREQUENCY UNIT

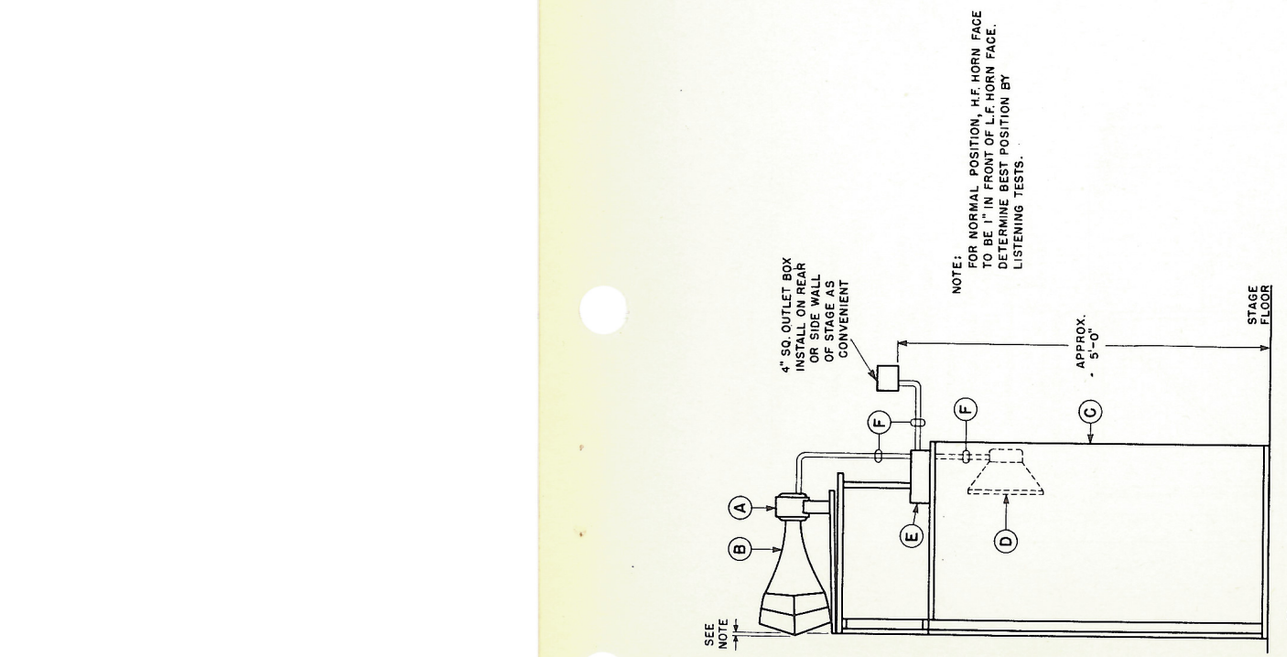

Ⓐ LU-1102 HIGH FREQUENCY UNIT (1)
Ⓑ LU-1099 HIGH FREQUENCY HORN (2 x 4) (9"H x 18"W x 17"D) (17 LBS. WITH UNIT)
Ⓒ LU-1100 LOW FREQUENCY HORN AND WINGS (67"H x 50"W x 24"D, 167 LBS. WITH UNIT)
Ⓓ LU-1101 LOW FREQUENCY UNIT (1)
Ⓔ LU-1098 NETWORK
Ⓕ NO.16 2-CONDUCTOR TIREX CABLE

FIGURE 2A
STAGE SPEAKER EQUIPMENT LAYOUT
(XL432-38 ONLY)
1 HIGH FREQUENCY UNIT
1 LOW FREQUENCY UNIT

Issued by
Engineering Department
Printed in U. S. A.

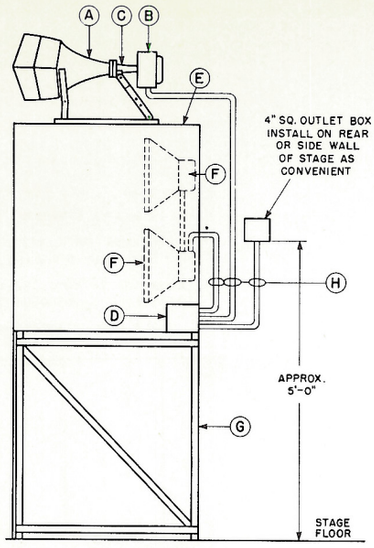

(A) HIGH FREQUENCY HORN
LU-1085 (2×4) OR LU-1086 (2×5)
(17"H×30"W×27"D)(76 LBS. WITH UNIT)

(B) LU-1104 HIGH FREQUENCY UNIT

(C) LU-2062 HORN THROAT (LU-1085)
LU-2063 HORN THROAT (LU-1086)

(D) LU-1121 NETWORK

(E) LU-1107 LOW FREQUENCY HORN
(42"H×77"W×35"D)
(550 LBS., 1 HORN WITH 2 UNITS)

(F) LU-1081 LOW FREQUENCY UNIT (2)

(G) LU-1108 LOW FREQUENCY HORN STAND

(H) NO. 16 2-CONDUCTOR TIREX CABLE

FIGURE 2C
STAGE SPEAKER EQUIPMENT LAYOUT
1 HIGH FREQUENCY UNIT
2 LOW FREQUENCY UNITS

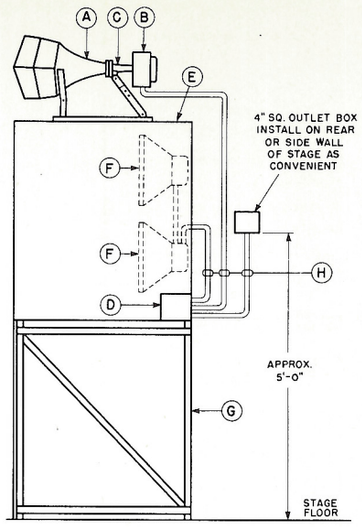

(A) HIGH FREQUENCY HORN
LU-1110 (2×4), LU-1086 (2×5) OR LU-1087 (3×5)
(25"H×30"W×27"D MAXIMUM)
(132 LBS. WITH 2 UNITS MAXIMUM)

(B) LU-1104 HIGH FREQUENCY UNIT (2)

(C) LU-2065 HORN THROAT (LU-1110, LU-1086)
LU-2066 HORN THROAT (LU-1087)

(D) LU-1121 NETWORK

(E) LU-1107 LOW FREQUENCY HORN
(42"H×77"W×35"D)
(550 LBS., ONE HORN WITH 2 UNITS)

(F) LU-1081 LOW FREQUENCY UNIT (2)

(G) LU-1108 LOW FREQUENCY HORN STAND

(H) NO. 16 2-CONDUCTOR TIREX CABLE

FIGURE 2D
STAGE SPEAKER EQUIPMENT LAYOUT
2 HIGH FREQUENCY UNITS
2 LOW FREQUENCY UNITS

Issued by
Engineering Department
Printed in U. S. A.

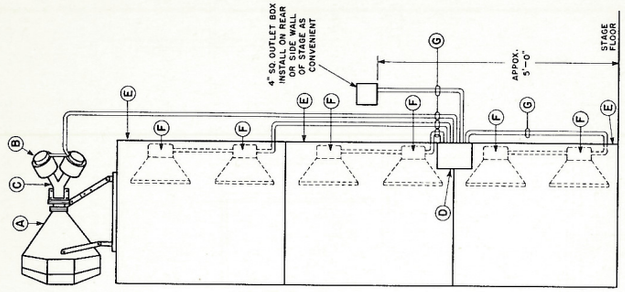

Ⓐ HIGH FREQUENCY HORN (LU-1091 (3x5) OR LU-1092 (3x6) (29"H x 45"W x 38"D) (324 LBS. WITH 4 UNITS)
Ⓑ LU-1104 HIGH FREQUENCY UNIT (4)
Ⓒ LU-2065 HORN THROAT (2)
Ⓓ LU-1121 NETWORK
Ⓔ LU-1107 LOW FREQUENCY HORN (3) (42"H x 77"W x 35"D EACH) (550 LBS., ONE HORN WITH 2 UNITS)
Ⓕ LU-1081 LOW FREQUENCY UNIT (6)
Ⓖ NO.16 2-CONDUCTOR THREX CABLE

FIGURE 2F
STAGE SPEAKER EQUIPMENT LAYOUT
4 HIGH FREQUENCY UNITS
6 LOW FREQUENCY UNITS

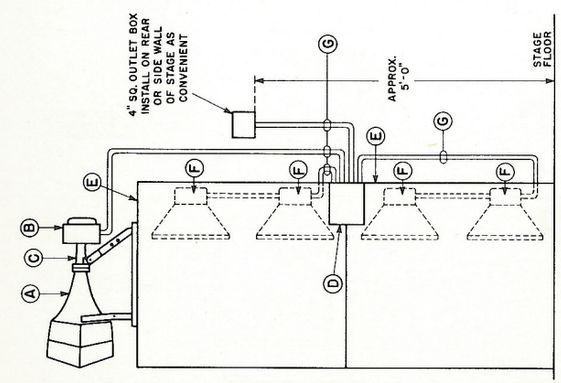

Ⓐ HIGH FREQUENCY HORN (LU-1086 (2x5) OR LU-1087 (3x5) (25"H x 30"W x 27"D MAXIMUM) (132 LBS. WITH 2 UNITS MAXIMUM)
Ⓑ LU-1104 HIGH FREQUENCY UNIT (2)
Ⓒ LU-2065 HORN THROAT (LU-1086)
LU-2066 HORN THROAT (LU-1087)
Ⓓ LU-1121 NETWORK
Ⓔ LU-1107 LOW FREQUENCY HORN (2) (42"H x 77"W x 35"D EACH) (550 LBS., ONE HORN WITH 2 UNITS)
Ⓕ LU-1081 LOW FREQUENCY UNIT (4)
Ⓖ NO.16 2-CONDUCTOR CABLE

FIGURE 2E
STAGE SPEAKER EQUIPMENT LAYOUT
2 HIGH FREQUENCY UNITS
4 LOW FREQUENCY UNITS

Issued by
Engineering Department
Printed in U. S. A.

ALTEC SERVICE CORPORATION
SIMPLEX
SOUND EQUIPMENT BULLETIN

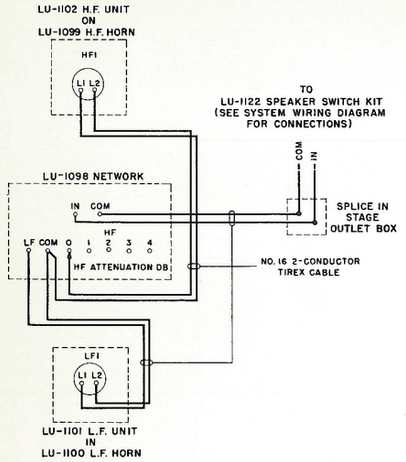

FIG. 4A

STAGE SPEAKER EQUIPMENT
WIRING DIAGRAM
(XL432-38 ONLY)

1 HIGH FREQUENCY SPEAKER UNIT
1 LOW FREQUENCY SPEAKER UNIT

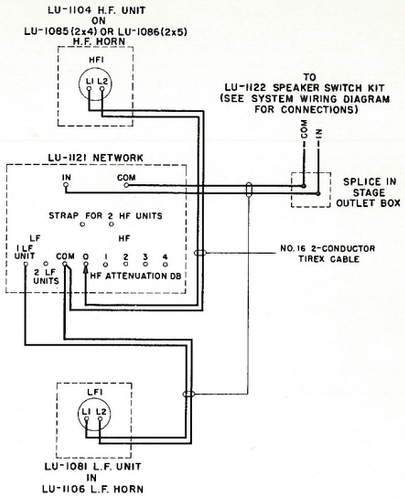

FIG. 4B

STAGE SPEAKER EQUIPMENT
WIRING DIAGRAM

1 HIGH FREQUENCY SPEAKER UNIT
1 LOW FREQUENCY SPEAKER UNIT

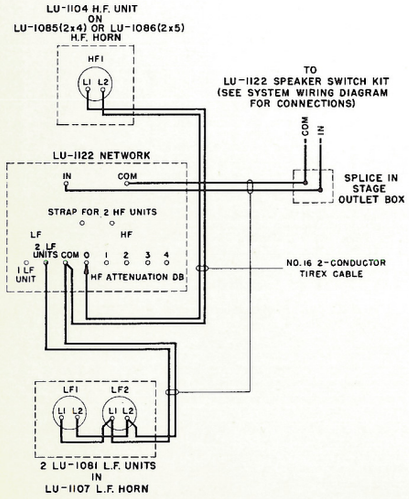

FIG. 4C

STAGE SPEAKER EQUIPMENT
WIRING DIAGRAM

1 HIGH FREQUENCY SPEAKER UNIT
2 LOW FREQUENCY SPEAKER UNITS

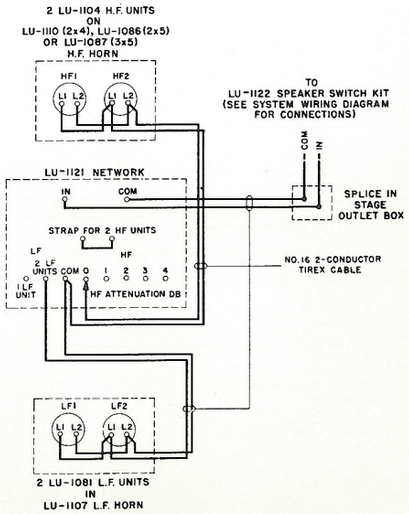

FIG. 4D

STAGE SPEAKER EQUIPMENT
WIRING DIAGRAM

2 HIGH FREQUENCY SPEAKER UNITS
2 LOW FREQUENCY SPEAKER UNITS

Issued by
Engineering Department
Printed in U. S. A.

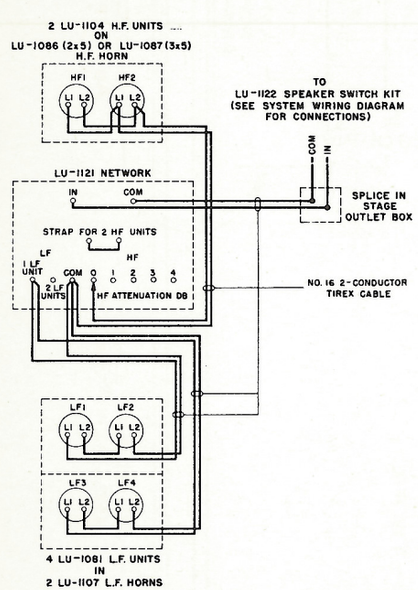

FIG. 4E

STAGE SPEAKER EQUIPMENT WIRING DIAGRAM

2 HIGH FREQUENCY SPEAKER UNITS
4 LOW FREQUENCY SPEAKER UNITS

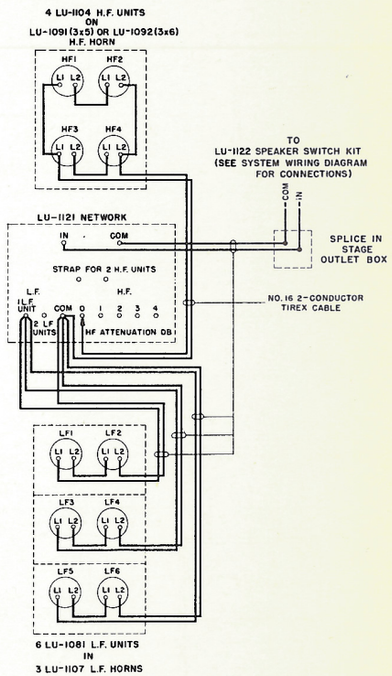

FIG. 4F

STAGE SPEAKER EQUIPMENT WIRING DIAGRAM

4 HIGH FREQUENCY SPEAKER UNITS
6 LOW FREQUENCY SPEAKER UNITS

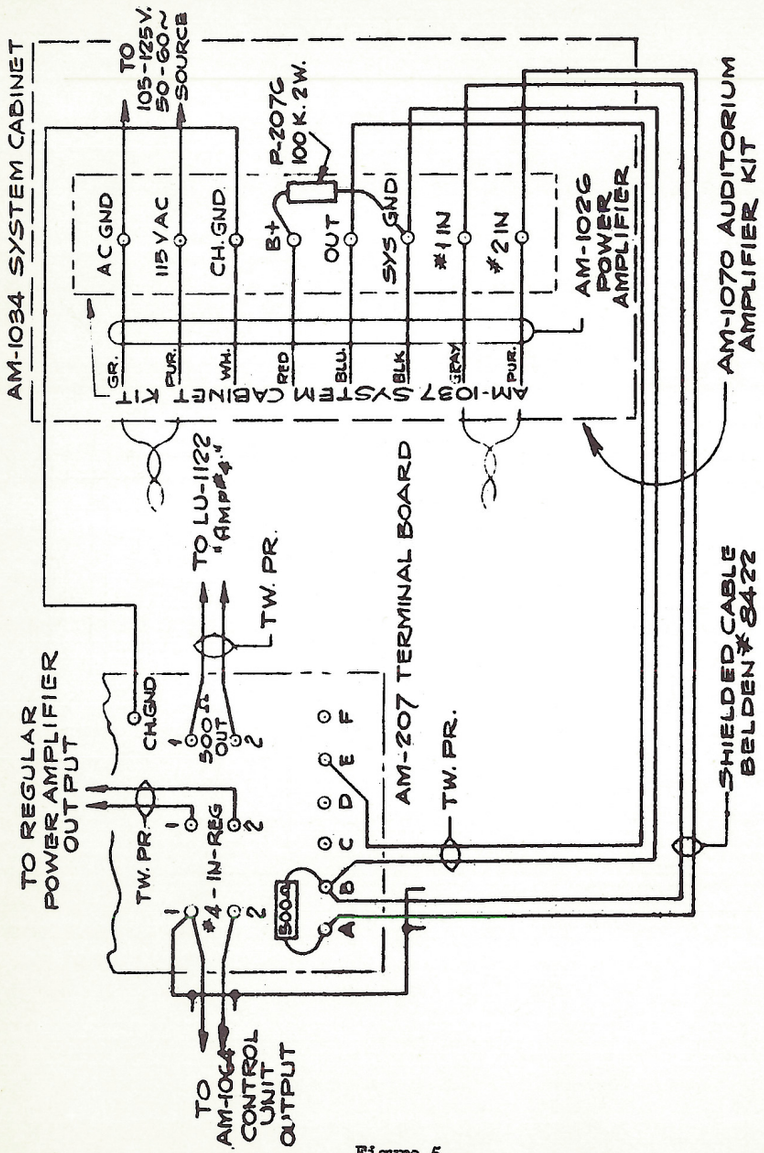

Figure 5

AM-1070
AUDITORIUM AMPLIFIER KIT
WIRING DIAGRAM

Issued by
Engineering Department
Printed in U. S. A.

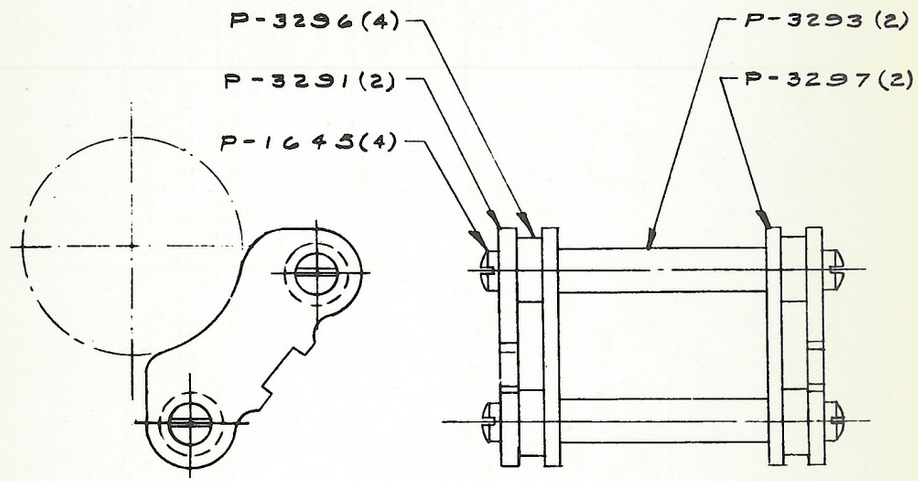

Figure 6

TENSION SHOE ASSEMBLY

Issued by
Engineering Department
Printed in U. S. A.

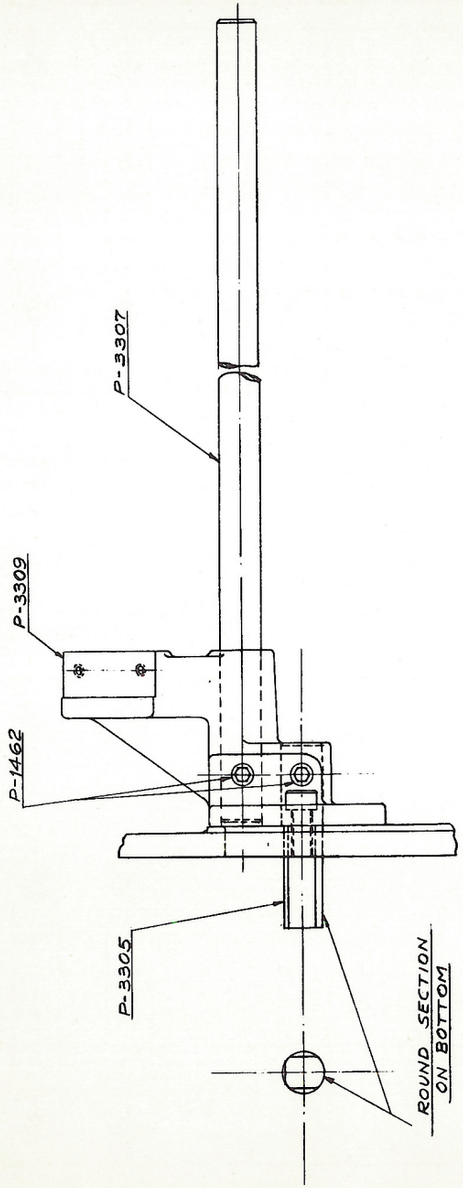

Figure 7

SUPPORT FOR
4" CINEMASCOPE LENS
ASSEMBLY

Issued by
Engineering Department
Printed in U. S. A.

AM-202 TRIPLE CHANGEOVER CABINET ADJ. (a)					RELATIVE RESPONSE-1000 CYCLE REFERENCE-0db CYCLES PER SECOND (c)						
CURVE DESIG	SYS. GAIN ADJ.	C1,C3 & C5 MF EA.	C2,C4 & C6 MF EA.	STRAP AS PER FIG.	2000	3000	4000	5000	6000	7000	8000
H-1	0db	.03	.03	3	0	0	0	0	0	0	0
	(b) -6db	.03	OPEN	1							
	-12db	.03	.03	2							
H-2	0db	.15	.15	3	-.5	-1.0	-1.5	-2.0	-2.5	-3.3	-3.5
	-6db	.1	OPEN	1							
	-12db	.15	OPEN	1							
H-3	0db	.15	.03	2	-1.0	-2.5	-3.5	-5.0	-5.5	-6.5	-7.0
	-6db	.1	.1	2							
	-12db	.1	.1	2							
H-4	0db	.15	.15	2	-2.0	-4.0	-6.0	-7.0	-8.0	-9.0	-10
	-6db	.15	.15	2							
	-12db	.15	.15	2							

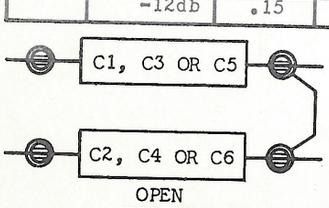

OPEN
FIG. 1

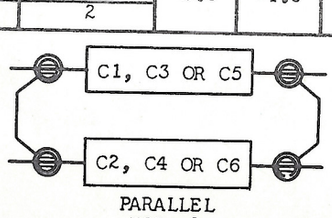

PARALLEL
FIG. 2

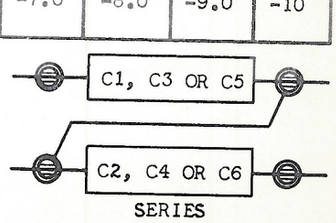

SERIES
FIG. 3

(a) Refer to Drawings W-1128 and W-1133.
(b) RESPONSE AS SHIPPED.
(c) Typical Response. Tolerance ±1 db.
Signal Source- Oscillator with 10 megohms in series.

FIGURE 8
SIMPLEX XL STEREOPHONIC SOUND SYSTEMS
HIGH FREQUENCY RESPONSE

Issued by
Engineering Department
Printed in U.S.A.

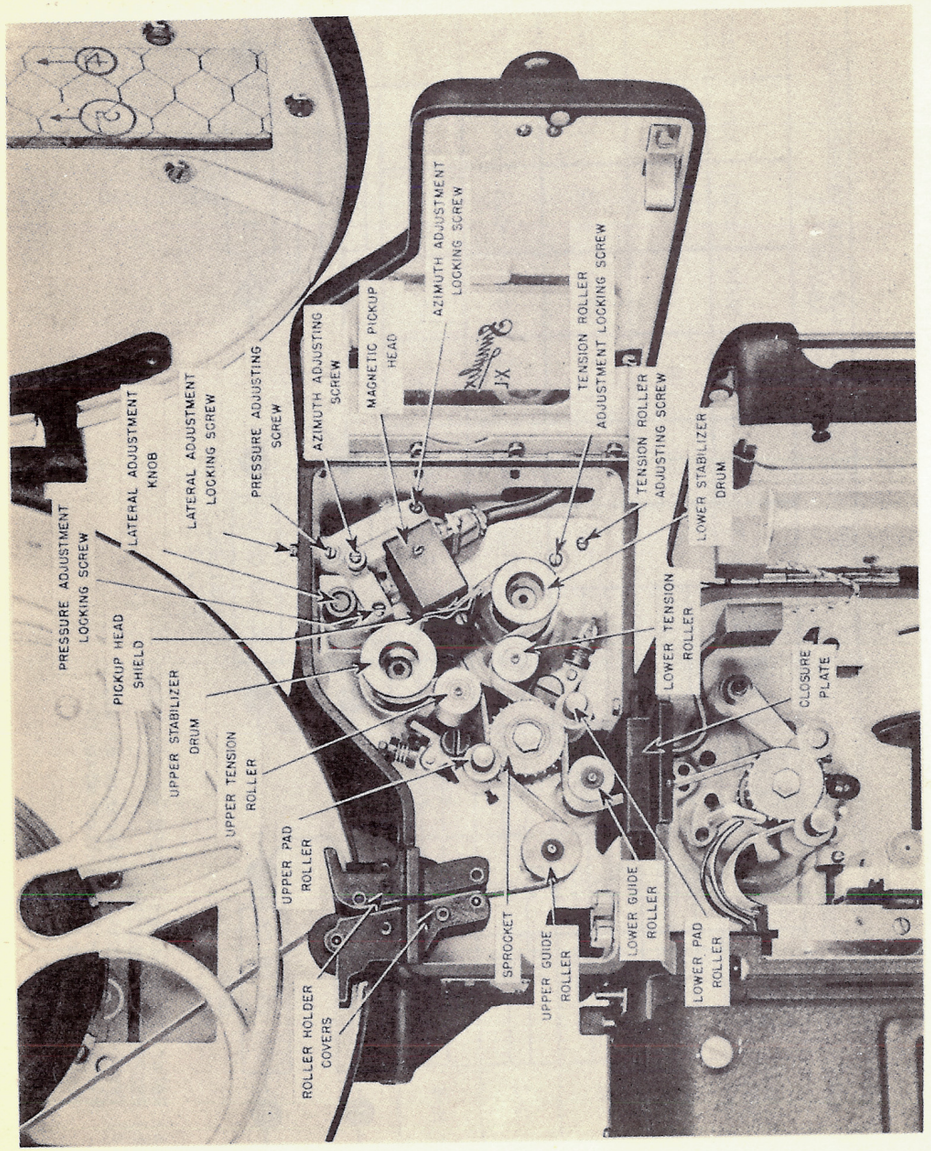

FIGURE 9
4-TRACK MAGNETIC SOUNDHEAD

Issued by
Engineering Department
Printed in U. S. A.

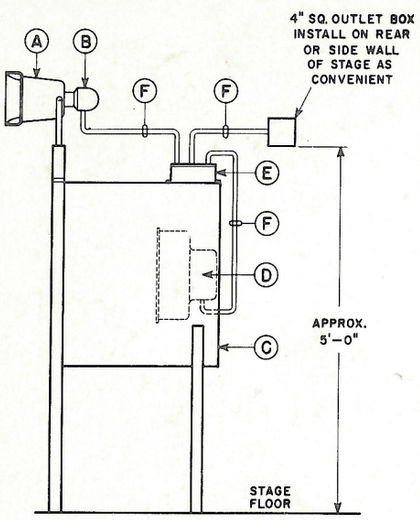

(A) LU-1125 HIGH FREQUENCY HORN
(9¼"H x 18½"W x 14½"D)
(14 LBS WITH UNIT)

(B) LU-1124 HIGH FREQUENCY UNIT

(C) LU-1127 LOW FREQUENCY HORN
(60"H x 48"W x 26"D)
(124 LBS WITH UNIT)

(D) LU-1123 LOW FREQUENCY UNIT

(E) LU-1126 NETWORK

(F) NO.16 2-CONDUCTOR TIREX CABLE

FIGURE 2G

STAGE SPEAKER EQUIPMENT LAYOUT
(XL432-39, XL433-39 SYSTEMS ONLY)

1 HIGH FREQUENCY UNIT
1 LOW FREQUENCY UNIT

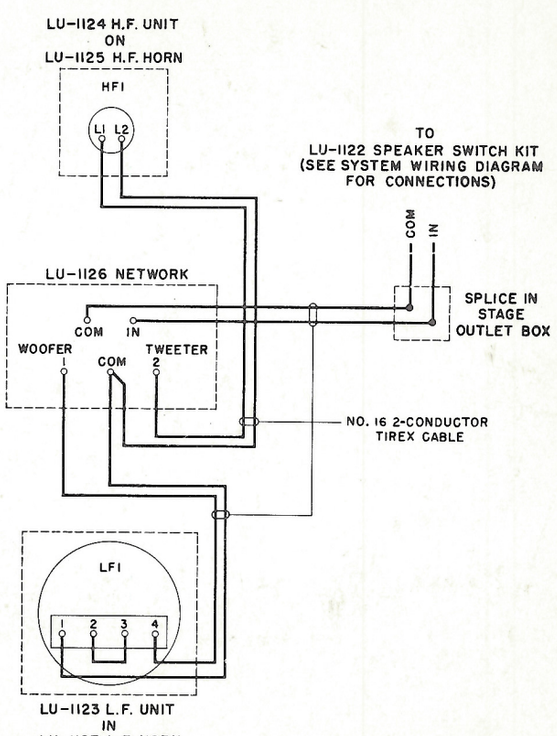

FIG. 4G

STAGE SPEAKER EQUIPMENT
WIRING DIAGRAM
(XL432-39, XL433-39 SYSTEMS ONLY)

1 HIGH FREQUENCY SPEAKER UNIT
1 LOW FREQUENCY SPEAKER UNIT

1 Page - Page 1
Issued by
Engineering Department
Printed in U. S. A.
March 22, 1954
Issue #1

I-2248

DRAWN 11-20-58
ISSUE: 1 11-25-58

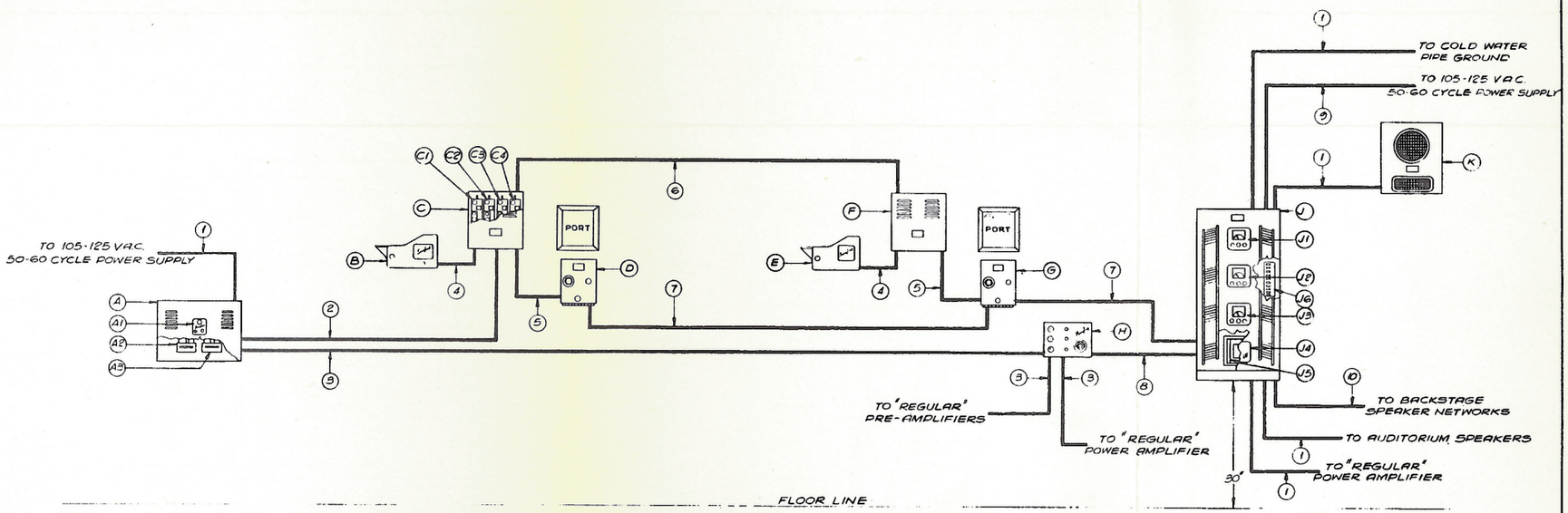

EQUIPMENT

(A) PU-1012 PRE-AMPLIFIER POWER SUPPLY CABINET (16"H × 21"W × 8 3/4"D)(38 LBS. COMPLETE)
INSTALL THE FOLLOWING:-
(A1) PU-1011 PRE-AMPLIFIER POWER SUPPLY
(A2) AM-1064 CONTROL UNIT
(A3) AM-1064 CONTROL UNIT

(B) & (E) SH-1025 MAGNETIC SOUNDHEAD (12"L × 10"W × 6 1/2"H)(20 LBS)

(C) & (F) AM-1066 PRE-AMPLIFIER CABINET (13 1/4"H × 13"W × 8 1/4"D)(12 LBS. COMPLETE)
WITH THE FOLLOWING:-
(C1) & (F1) AM-1065 PRE-AMPLIFIER
(C2) & (F2) AM-1065 PRE-AMPLIFIER
(C3) & (F3) AM-1065 PRE-AMPLIFIER
(C4) & (F4) AM-1065 PRE-AMPLIFIER

(D) AM-203 TRIPLE CHANNEL CHANGEOVER CABINET (12"H × 9 1/8"W × 6"D)(11 LBS)

(G) AM-202 TRIPLE CHANNEL CHANGEOVER & WARPING CABINET (12"H × 9 1/8"W × 6"D)(11 LBS)

(H) AM-207 SYSTEM SELECTOR BOX (6"H × 8"W × 4"D)(7 LBS)

(J) AM-1031 SYSTEM CABINET (44 1/4"H × 21"W × 13 3/4"D) (265 LBS COMPLETE)
INSTALL THE FOLLOWING:-
(J1) AM-1026 or AM-1027 AMPLIFIER
(J2) AM-1026 or AM-1027 AMPLIFIER
(J3) AM-1026 or AM-1027 AMPLIFIER
(J4) AM-1054 MONITOR AMPLIFIER & CONTROL PANEL
(J5) LU-1128 OUTPUT SWITCH KIT
(J6) AM-1055 SYSTEM CABINET KIT

(K) LU-142 MONITOR SPEAKER ASSEMBLY (18"H × 15"W × 8D)(19 LBS)

CONDUIT AND WIRING

(1) 1/2" CONDUIT	2-N°14 BRC	
(2) 1" CONDUIT	3-N°14 BRC 1-N°14 TW.PR BRC 2-SHIELDED CABLE *	
(3) 1/2" CONDUIT	1-SHIELDED CABLE *	
(4) 1" FLEXIBLE CONDUIT	4-SHIELDED CABLE * 1-N°14 BRC	
(5) 3/4" CONDUIT	3-SHIELDED CABLE * 1-N°14 BRC	
(6) 3/4" CONDUIT	1-SHIELDED CABLE * 2-N°14 BRC 1-N°14 TW.PR BRC	
(7) 1" CONDUIT	3-SHIELDED CABLE * 1-N°14 TW.PR BRC 1-N°14 BRC	
(8) 1" CONDUIT	8-N°14 BRC	
(9) 1/2" CONDUIT	1-N°14 BRC	
(10) 3/4" CONDUIT	6-N°14 BRC	

NOTE: LOCATION FOR AM-1065 CABINETS MIN. DISTANCE 3 FEET FROM MOTORS & PU-1012 CABINET

SCALE

CONDUIT LAYOUT
XL-432- & XL-436- SINGLE FILM STEREO SOUND SYSTEMS
INTERNATIONAL PROJECTOR CORPORATION
99 LA FRANCE AVENUE
BLOOMFIELD NEW JERSEY
DR BD CH'K. APP'D
I-2248

UNLESS OTHERWISE SPECIFIED REMOVE ALL BURRS BREAK SHARP CORNERS TOLERANCES OF ALL FRACT. DIM. TO BE ± 1/64 TOLERANCES OF ALL DECIMAL DIM. TO BE ± .005

PRODUCT CLASS

Issued by
Engineering Department
Printed in U.S.A.

FIGURE 1
XL432 & XL436 TYPE SINGLE FILM
SIMPLEX STEREOPHONIC SOUND SYSTEMS
CONDUIT LAYOUT

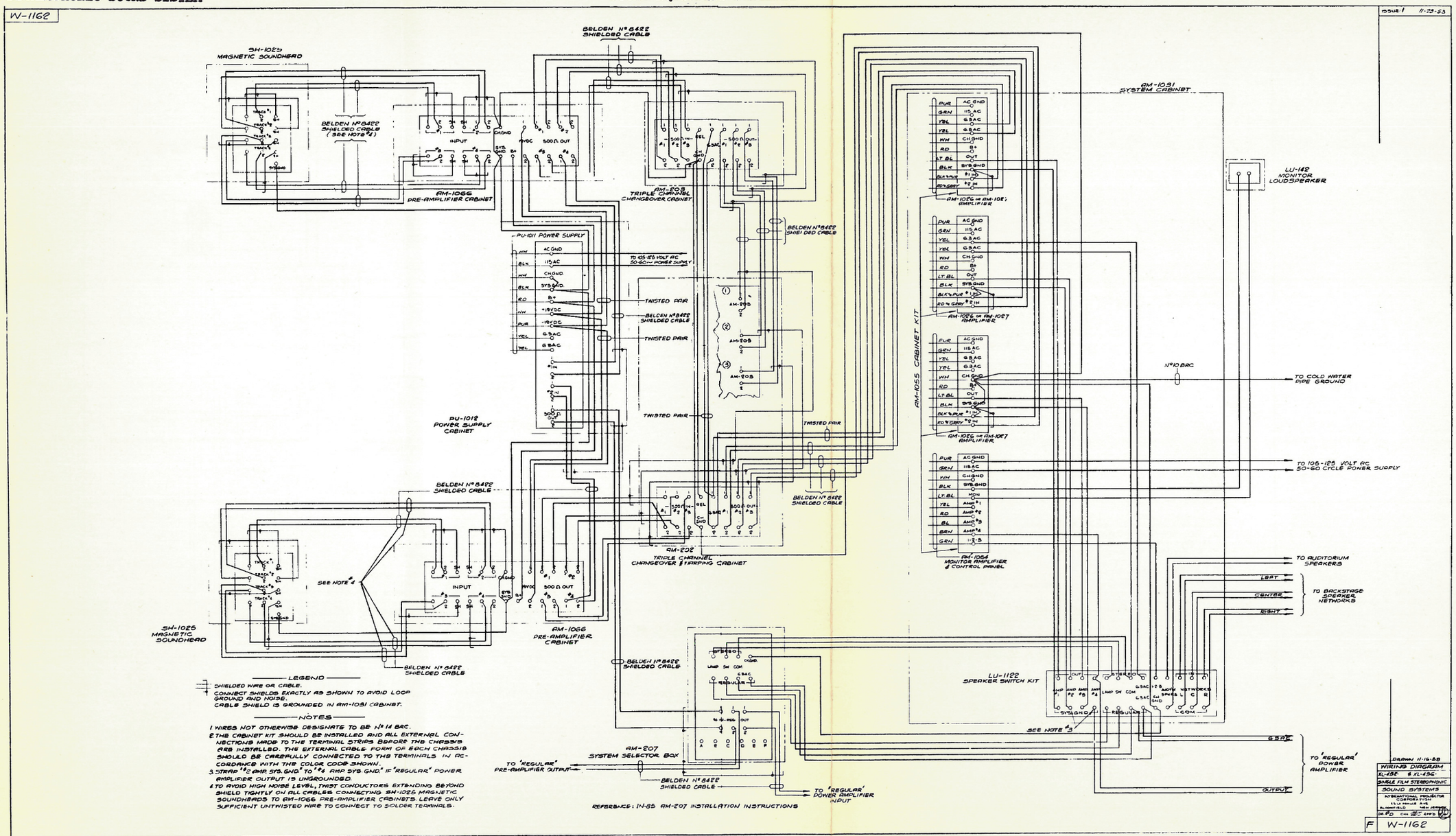

Issued by
Engineering Department
Printed in U.S.A.

FIGURE 3
XL432 & XL436 TYPE SINGLE FILM
SIMPLEX STEREOPHONIC SOUND SYSTEMS
WIRING DIAGRAM

ADDENDUM #1

1. PURPOSE - To call attention to certain errors in Issue #1 of this bulletin dated February 1, 1954 and supply the correct data.

   Note - These corrections also apply to information contained in the temporary Stereophonic Data Sheets Pages 63-66.

2. CORRECTIONS -

   Page 4, Paragraph 3, Line 5 - Change to read: "Power Amplifier with a nominal input level of -20 db/6 mw".

   Page 5, Paragraph 6, Line 2 - Change to read: "Systems having a power amplifier with a Nominal Input Level of less than -20 db/6 mw".

   Page 5, Paragraph 7 - Delete Note and sub-paragraphs (c), (d), (e) and (f). Add - Connect a suitable 500/500 ohm matching transformer (Peerless E-372-Q or equivalent) as follows: Primary-Terminals A & #4-IN-1 Secondary-Terminals B & E

   Page 6, Paragraph 8, sub-paragraph (a) - Change first line to read: "The AM-1070, AM-1071 and AM-1073 Auditorium Amplifier Kits are -------".
   Add - Note: In some installations it may be necessary to remove the jumper between Terminals "#4-IN-1" and "REG-IN-1", in order to avoid a system ground loop.

   Fig. 5 - Add "AM-1027" and "AM-1080" to power amplifier type in AM-1034 System Cabinet.

SIMPLEX XL600 SOUND SYSTEM
HIGH FREQUENCY RESPONSE ADJUSTMENTS

REFERENCE DRAWINGS:
W-1198 AM-1151 Cabinet Kit, Wiring Diagram
W-1207 XL600 Sound System, Schematic

1. The AM-1151 Cabinet includes a warping network for use when the regular optical system does not provide for adjustment of the high frequency response. The network is adjusted in accordance with the following table.

Curve Desig.	AM-1151 Cabinet Kit Adjustments						Relative Response-1000 Cycle Reference-ODB Cycles per Second (d)								
	C-1 MF	C-2 MF	C-3 MF	C-4 MF	R-1 Ohms	NOTE REF.	2000	2500	3000	3500	4000	5000	6000	7000	8000
H1	0.03	0.03	0.03	0.03	120	(a)	+1.0	+2.3	+3.9	+4.7	+3.9	-0.6	-4.5	-8.0	-11.5
H2	Open	0.03	Open	0.03	120	-	+1.2	+2.5	+4.1	+4.7	+3.7	-0.4	-5.0	-9.3	-13.0
H3	0.03	0.03	0.03	0.03	470	(a)	-1.0	-1.0	-0.7	0	-0.1	-4.6	-8.0	-10.7	-13.5
H4	0.03	0.03	0.03	0.03	Open	(a)	-1.0	-1.5	-1.9	-2.6	-3.6	-6.1	-8.7	-12.0	-15.0
H5	Open	0.03	Open	0.03	470	-	-0.8	-0.8	-0.7	0	-0.6	-4.1	-8.5	-11.7	-15.0
H6	Open	0.03	Open	0.03	Open	(b)	-0.7	-1.0	-1.9	-2.8	-4.1	-6.6	-10.0	-13.0	-16.5
H7	0.03	0.03	0.03	0.03	120	(c)	+1.8	+3.0	+4.3	+4.5	+2.9	-2.1	-7.5	-12.0	-16.0
H8	0.03	0.03	0.03	0.03	470	(c)	-0.5	-0.5	-0.4	0	-1.1	-6.6	-11.0	-15.0	-18.5
H9	0.03	0.03	0.03	0.03	Open	(c)	-0.7	-1.2	-1.9	-3.0	-4.6	-8.3	-12.5	-16.8	-20.3
H10	Open	0.1	Open	0.1	120	-	+2.3	+3.0	+4.1	+3.5	+0.9	-6.6	-12.5	-17.0	-21.5
H11	Open	0.1	Open	0.1	470	-	-0.5	-0.6	-0.8	-1.1	-3.6	-10.6	-15.7	-19.5	-24.0
H12	Open	0.1	Open	0.1	Open	-	-1.8	-2.0	-2.6	-4.5	-7.1	-12.6	-17.5	-21.5	-25.0

NOTES

(a) Connect C1, C2 and C3, C4 in series as follows:-

(1) Remove the strap between right terminals of C1 and C2 and the left terminals of C3 and C4.

(2) Strap the left terminal of C1 to the right terminal of C2.

(3) Strap the right terminal of C3 to the left terminal of C4.

(b) Response as shipped.

(c) Connect C1, C2 and C3, C4 in parallel as follows:-

(1) Strap the left terminals of C1 and C2.

(2) Strap the right terminals of C3 and C4.

(d) The SMPTE-Motion Picture Research Council Test Film ASFA-2 was used in obtaining all data. If other test films are used, some differences are to be expected.

Issued by
Engineering Department
Printed in U. S. A.

March 14, 1955
Issue #1

SIMPLEX THREE CHANNEL MAGNETIC STEREOPHONIC / OPTICAL SOUND SYSTEM
(EQUIPMENT REQUIREMENTS FOR CONVERSION OF AN EXISTING XL OPTICAL
SOUND SYSTEM TO AN XL 500 3 CHANNEL STEREOPHONIC SYSTEM)

COMPONENT NUMBER	DESCRIPTION	XL2-11 TO 532-311	XL2-12 TO 532-312	XL4-12 TO 532-312	XL4-22 TO 532-322	XL6-12 TO 536-312	XL6-22 TO 536-322	XL6-24 TO 536-324
		← SPECIFY XL-500 SYSTEM REQUIRED →						
		← LESS THE FOLLOWING COMPONENTS →						
AM-1027	POWER AMPLIFIER	1	1	2	2	–	–	–
AM-1026	" "	–	–	–	–	1	1	1
LU-143	STAGE SPEAKER EQUIP.	1	–	–	–	–	–	–
LU-144	" " "	–	1	1	–	1	–	–
LU-145	" " "	–	–	–	1	–	1	–
LU-146	" " "	–	–	–	–	–	–	1
AM-1028	PRE-AMPLIFIER	1	1	1	1	1	1	1
AM-1031	SYSTEM CABINET (4 PLACE)	1	1	1	1	1	1	1
AM-1054	MONITOR AMP. & CONTROL PANEL	1	1	1	1	1	1	1
LU-142	MONITOR SPEAKER	1	1	1	1	1	1	1
LU-1121	SPEAKER NETWORK ASSY.	1	1	1	1	1	1	1
		ADDITIONAL EQUIPMENT REQUIRED						
AM-1092	XL OPTICAL CONVERSION KIT	1	1	1	1	1	1	1
	FOR FOUR CHANNEL INSTALLATION ADD:							
AM-1064	CONTROL UNIT	1	1	1	1	1	1	1
AM-1065	PRE-AMPLIFIER	1	1	1	1	1	1	1
P-3257	TRANSFORMER	1	1	1	1	1	1	1
LU-150	AUDITORIUM SPEAKER	← AS REQUIRED →						
LU-151	" "	← AS REQUIRED →						

EQUIPMENT REQUIREMENTS FOR A COMPLETE "NEW THEATRE"
XL-500 3 CHANNEL MAGNETIC STEREOPHONIC / OPTICAL SYSTEM

COMPONENT NUMBER	DESCRIPTION	532-38	532-39	532-311	532-312	536-312	536-322	536-324
		← SPECIFY XL-500 SYSTEM REQUIRED →						
		← PLUS THE FOLLOWING OPTICAL KIT →						
AM-1093	XL-500 NEW THEATRE EQUIP. KIT	*1	*1	*1	*1	*1	*1	*1
	FOR FOUR CHANNEL INSTALLATION ADD:							
AM-1026	POWER AMPLIFIER	–	–	–	–	1	1	1
AM-1027	" "	1	1	1	1	–	–	–
AM-1031	SYSTEM CABINET (4 PLACE)	1	1	1	1	1	1	1
AM-1037	SYSTEM CABINET KIT	1	1	1	1	1	1	1
AM-1091	XL-500 4th CHANNEL KIT	1	1	1	1	1	1	1
LU-150	AUDITORIUM SPEAKER	← AS REQUIRED →						
LU-151	" "	← AS REQUIRED →						

*FOR FOUR CHANNEL INSTALLATION ORDER AM-1093 OPTICAL KIT LESS ONE (1) AM-1034

3 Pages - Page 1

Issued by
Engineering Department
Printed in U.S.A.

August 23, 1955
Issue #1

6/23/55

ALTEC SERVICE CORPORATION
SIMPLEX
SOUND EQUIPMENT BULLETIN

SIMPLEX THREE CHANNEL MAGNETIC STEREOPHONIC / OPTICAL SOUND SYSTEMS(20N)
(FOR MODERNIZATION OF ANY EXISTING OPTICAL SOUND SYSTEM OTHER THAN XL)

	COMPONENT NUMBER	DESCRIPTION	XL101	XL532 -38	XL532 -39	XL532 -311	XL532 -312	XL536 -312	XL536 -322	XL536 -324
REPRODUCER EQUIPMENT	SH-1025	MAGNETIC SOUNDHEAD	–	2	2	2	2	2	2	2
	SH-1026	" " (MIXER TYPE)	2	–	–	–	–	–	–	–
	AM-211	FOUR CHANNEL CHANGEOVER CAB.	2	2	2	2	2	2	2	2
	AM-1079	WARPING UNIT	1	–	–	–	–	–	–	–
AMPLIFIER EQUIPMENT	AM-1026	POWER AMPLIFIER	–	–	–	–	–	3	3	3
	AM-1027	"	–	3	3	3	3	–	–	–
	AM-1028	PRE-AMPLIFIER	–	1	1	1	1	1	1	1
	AM-1031	SYSTEM CABINET (4 PLACE)	–	1	1	1	1	1	1	1
	AM-1054	MONITOR AMP. & CONTROL PANEL	–	–	–	1	1	1	1	1
	AM-1055	SYSTEM CABINET KIT	–	–	–	1	1	1	1	1
	AM-1062	MONITOR CONTROL PANEL & SYSTEM CAB. KIT	–	1	1	–	–	–	–	–
	AM-1065	PRE-AMPLIFIER	2	3	3	3	3	3	3	3
	AM-1066	" CABINET	1	1	1	1	1	1	1	1
	AM-1089	SYSTEM CONTROL CABINET	+	1	1	1	1	1	1	1
	PJ-1011	PRE-AMPLIFIER POWER SUPPLY	1	1	1	1	1	1	1	1
	PJ-1012	POWER SUPPLY CABINET	1	–	–	–	–	–	–	–
	PJ-1014	" " "	–	1	1	1	1	1	1	1
LOUD-SPEAKER EQUIPMENT	LU-143	STAGE SPEAKER EQUIPMENT	–	–	–	3	–	–	–	–
	LU-144	" " "	–	–	–	–	3	3	–	–
	LU-145	" " "	–	–	–	–	–	–	3	–
	LU-146	" " "	–	–	–	–	–	–	–	3
	LU-148	" " "	–	3	–	–	–	–	–	–
	LU-160	" " "	–	–	3	–	–	–	–	–
	LU-1121	SPEAKER NETWORK ASSEMBLY	–	–	–	3	3	3	3	3
ACCESSORY EQUIPMENT	AM-207	SYSTEM SELECTOR BOX	1	–	–	–	–	–	–	–
	LU-142	MONITOR SPEAKER	–	1	1	1	1	1	1	1
	PJ-1013	POWER SUPPLY DUMMY LOAD	2	–	–	–	–	–	–	–
EMERGENCY TUBE KITS	AM-1063	SPARE TUBE KIT	1	1	1	1	1	1	1	1
	AM-1067	" " "	–	1	1	1	1	–	–	–
	AM-1068	" " "	–	–	–	–	–	1	1	1
FOR FOUR CHANNEL INSTALLATION ADD: *AM-1091 XL500 4th CHANNEL KIT			1	1	1	1	1	1	1	1
LU-150 AUDITORIUM SPEAKER			AS REQUIRED							
LU-151 "			AS REQUIRED							
IF NEW FOURTH CHANNEL POWER AMPLIFIER EQUIPMENT IS DESIRED, ADD: AM-1070 AUDITORIUM AMP. KIT			–	–	–	–	–	1	1	1
AM-1071 " "			1	1	1	1	1	–	–	–

*SOLD ONLY WITH COMPLETE SOUND SYSTEM

6/23/55

SIMPLEX XL MAGNETIC STEREOPHONIC/OPTICAL SOUND KITS

AM-1070 AMPLIFIER KIT

1 - AM-1026	Power Amplifier
1 - AM-1034	System Cabinet (Single Place)
1 - AM-1037	Cabinet Kit
1 - P-2076	Resistor

AM-1071 AMPLIFIER KIT

1 - AM-1027	Power Amplifier
1 - AM-1034	System Cabinet (Single Place)
1 - AM-1037	Cabinet Kit
1 - P-2076	Resistor

AM-1091 XL500 4TH CHANNEL KIT

1 - AM-1064	Control Unit
1 - AM-1065	Pre-Amplifier
1 - P-3257	Transformer

AM-1092 XL500 OPTICAL CONVERSION KIT

1 - AM-1034	System Cabinet (Single Place)
1 - AM-1050	Cabinet Kit
1 - AM-1081	Monitor Control Panel
1 - G-2474	Network Box

AM-1093 XL500 NEW THEATRE EQUIPMENT KIT

1 - AM-1034	System Cabinet (Single Place)
2 - SH-1007	Sound Head Assembly (60 Cycle)
or	
2 - SH-1008	" " " (50 Cycle)
2 - SH-1009	Motor Assembly (60 Cycle)
or	
2 - SH-1010	" " (50 Cycle)
1 - SH-1011	Sound head Accessory Kit
1 - PU-1009	Power Unit (60 Cycle)
or	
1 - PU-1010	" " (50 Cycle)
1 - AM-1050	Cabinet Kit

Issued by
Engineering Department
Printed in U. S. A.

August 23, 1955
Issue #1

X-L SOUND SYSTEMS
VOLTAGE AND CURRENT TEST DATA

Vacuum Tube	Vacuum Tube Voltages Pin #1	Pin #2	Pin #3	Pin #4	Pin #5	Pin #6	Pin #7	Pin #8	Pin #9	Pin #10	Tube Cap	Other Voltage Data Total Plate Current
AM-1026 Amplifier (See Notes: 1 and 2)												
V1 (6SL7GT)	G2 50	P2 205	K2 90	G1 0	P1 90	K1 0.6	H 3AC	H 3AC	-	-	-	Junction R32 and L1 590V
V2 (6SL7GT)	G2 50	P2 205	K2 90	G1 0	P1 90	K1 0.6	H 3AC	H 3AC	-	-	-	Junction R25 and C7 -150V
V3 (6SN7GTA)	G2 -10	P2 300	K2 -30	G1 -10	P1 300	K1 -30	H 3AC	H 3AC	-	-	-	Junction R25 and C6 -185V
V4 (#807)	H 3AC	G2 300	G1 -30	K 0.2	H 3AC	-	-	-	-	-	585	
V5 (#807)	H 3AC	G2 300	G1 -30	K 0.2	H 3AC	-	-	-	-	-	585	Total Plate Current 140MA
V6 (VR-150)	-	K 0		-	P 150	-	-	-	-	-	-	(See Note: 5)
V7 (VR-150)	-	K 150		-	P 300	-	-	-	-	-	-	
V8 (5R4GY)	-	F 560		-	P2 720AC	-	P1 720AC	-	F 600	-	-	
V9 (5R5GY)	-	F 560		-	P2 720AC	-	P1 720AC	-	F 600	-	-	
AM-1027 AMPLIFIER (See Notes: 1 and 2)												
V1 (6SL7GT)	G2 0	P2 155	K2 0.9	G1 0	P1 155	K1 0.9	H 3AC	H 3AC	-	-	-	Junction L1 and C10 385V
V2 (6SL7GT)	G2 -10	P2 300	K2 -25	G1 -10	P1 300	K1 -25	H 3AC	H 3AC	-	-	-	Junction R25 and C7 -165V
V3 (6L6G)	-	H 3AC	P 370	G2 300	G1 -25	-	H 3AC	K 0.3	-	-	-	Junction R25 and C6 -165V
V4 (6L6G)	-	H 3AC	P 370	G2 300	G1 -25	-	H 3AC	K 0.3	-	-	-	Total Plate Current 170MA
V5 (5R4GY)	-	F 380	-	P2 490AC	-	P1 490AC	-	F 385	-	-	-	(See Note: 5)
AM-1028 PEC AMPLIFIER (See Notes: 1 and 2)												
V1 (6J7)	SH 0	H 3AC	P 52	G2 25	G3 0.9	-	H 3AC	K 0.9	-	-	-	Total Plate Current 4MA
V2 (6J7)	SH 0	H 3AC	P 160	G2 160	G3 160	-	H 3AC	K 16	-	-	-	(See Note: 6)
P1(Connector)	3AC	65	0	0	0	3AC	285	0	0	0	-	
AM-1029 MONITOR AMPLIFIER (See Notes 1 and 2)												
V1 (6SL7GT)	G2 0	P2 110	K2 0.8	G1 0	P1 110	K1 0.8	H 3AC	H 3AC	-	-	-	Total Plate Current 55MA
V2 (6L6G)	-	H 3AC	P 300	G2 260	G1 0	-	H 3AC	K 18	-	-	-	(See Note: 7)
V3 (5Y3GT)	-	F 335	-	P2 310AC	-	P1 310AC	-	F 340	-	-	-	
AM-1064 CONTROL UNIT (See Note: 1)												
V1 (12AT7)	P2 150	G2 0	K2 1.7	H2 3AC	H1 3AC	P1 120	G1 0.4	K1 0	HM 3AC	-	-	Total Plate Current 6MA
P1(Connector)	0	300	3AC	0	0	0	-	3AC	0	0	-	(See Note: 8)
AM-1065 PRE-AMPLIFIER (See Note: 1)												
V1 (#5879)	G1 0	0	K 1.5	H1 19	H2 12	0	G2 40	P 70	G3 1.5	-	-	Total Plate Current 8MA
V2 (12AT7)	P2 55	G2 0	K2 1.0	H2 12	H1 0	P1 265	G1 0	K1 3.5	-	-	-	(See Note: 9)
P1(Connector)	0	300	19	0	0	0	-	0	0	0	-	
PU-1011 POWER SUPPLY (See Note: 1)												
V1 (5Y3GT)	-	F 370	-	P2 450AC	-	P1 450AC	-	F 370	-	-	-	Terminal B+ 300V DC
V2 (5Y3GT)	-	F 370	-	P2 450AC	-	P1 450AC	-	F 370	-	-	-	

NOTES

1. All voltages are:-
   a. DC unless otherwise specified.
   b. To system ground.
   c. Taken with a 1000 ohm/volt voltmeter.
   d. With a 115 volt, 60 cycle AC power supply.
   e. With no signal.
2. The AM-1026, AM-1027 and AM-1029 Amplifier data were obtained without load.
3. The AM-1028 PEC Amplifier plate and heater supply are obtained from the AM-1026 or AM-1027 Amplifier.
4. The PU-1009 and PU-1010 Power Unit data were obtained with 4 amperes flowing to each of two exciter lamps.
5. Disconnect B1 wire from L1 and insert 0-250 MA DC meter.
6. Disconnect wire from B+ terminal on Soundhead and insert 0-10 MA DC meter.
7. Disconnect strap from V3, Pin #8 and insert 0-100 MA DC meter.
8. Disconnect strap between P1 and R3 and insert 0-10 MA DC meter.
9. Disconnect Red wire between P1 and T2, terminal 1, and insert 0-10 MA DC meter.

PU-1009, PU-1010 Power Unit (See Notes: 1 and 4)	
Junction CR1 and L1	14.VDC
Junction L1 and L2	12.5VDC
Junction L2 and C2	11.0VDC
T1 SS	17.5VAC

X-L SOUND SYSTEMS
TRANSFORMER AND REACTOR RESISTANCE-OHMS

COMPONENT	PRIMARY		SECONDARY	
	TERMINALS	OHMS	TERMINALS	OHMS
AM-1026 AMPLIFIER				
T1 (Input)	P-P	22	S-S	2230
T2 (Output)	P-P	156	0-8 0-16 0-32	0.8 1.1 1.5
T3 (Power)	C-125	1.1	5-5 6.3-6.3 HV-HV CT-BT	0.1 0.1 145 14
L1	-	60	-	-
AM-1027 AMPLIFIER				
T1 (Input)	P-P	22	S-S	2230
T2 (Output)	P-P	246	0-8 0-16	1. 1.3
T3 (Power)	C-125	2.2	5-5 6-3-6.3 HV-HV CT-BT	0.1 0.1 175 21
L1	-	100	-	-
AM-1028 PRE-AMPLIFIER				
T1 (Output)	P-P	1400	S-S	25
AM-1029 MONITOR AMPLIFIER				
T1 (Output)	P-P	440	0-4 0-8 0-16	0.6 0.8 1.1
T2 (Power)	0-125	7.3	5-5 6.3-6.3 HV-HV	0.2 0.2 360
PU-1009, PU-1010 POWER UNIT				
T1 (Power) L1 and L2	P-P -	1.1 0.2 Max.	S-S -	0.2 -

NOTES

1. All resistance measurements are to be made with all vacuum tubes removed and the cable form wires disconnected from the associated terminal strip.

1-55

INTERNATIONAL PROJECTOR CORPORATION
BLOOMFIELD, N. J.
PRINTED IN U.S.A.

1. GENERAL

The XL500 System consists of the following components:

1.1 Magnetic

2 SH-1025 Magnetic Soundheads
2 AM-211 Changeover Cabinets
1 AM-1089 System Control Cabinet
1 AM-1064 Control Unit
1 AM-1066 Cabinet
4 AM-1065 Preamplifiers
1 PU-1014 Cabinet
1 PU-1011 Power Supply
1 AM-1031 System Cabinet
3 AM-1026 or AM-1027 Power Amplifiers
1 AM-1054 Mon. Amplifier and Control Panel

1.2 Optical

2 SH-1007 Reproducers
1 AM-1028 Preamplifier (mounted in AM-1089 System Control Cabinet)
1 AM-1031 System Cabinet
1 AM-1026 or AM-1027 Power Amplifier
1 PU-1009 Power Unit

2. SH-1025 MAGNETIC SOUND MECHANISM - File reference 40.385, XL-101, Page 1, Par. 3.1

3. MAGNETIC PICKUP HEAD ADJUSTMENT - File reference 40.385, XL-432 and XL-436, Page 20, Par. B9

4. AM-1065 PREAMPLIFIER

a. Initially set each preamplifier gain control, R-10, in mid-position.

b. Terminate each of the stereophonic power amplifiers in a resistive load after disconnecting the stage speaker load.

c. Set the system selector switch on the AM-1089 system control cabinet on STEREO and the EMERGENCY switch on NORMAL.

d. Depress the button on the AM-211 Changeover Cabinet associated with the operating machine.

e. With a 1 KC test film running, connect an AC voltmeter (1,000 ohms/volt or better) across the output of the preamplifier in channel #1 and note the reading.

f. Interchange the preamplifiers in channels #1 and #2, and adjust R-10 so that the voltmeter reading is the same as in the previous paragraph.

g. Substitute the other two preamplifiers for that in channel #1 and adjust R-10 of each so that the voltmeter reading is the same.

h. Paragraph 3 above describes the adjustments required to equalize the outputs of the magnetic soundhead after the AM-1065 preamplifiers have been set for equal gain.

5. AM-1089 SYSTEM CONTROL CABINET

5.1 Stereophonic System Gain Adjustment

a. Potentiometers R7 to R12 inclusive, provide flexible adjustment of the system gain and also equalize the output of machines. Set in full clockwise position initially.

b. Set the SYSTEM VOLUME control in mid-position and adjust each potentiometer, as required, to give normal auditorium volume and the same output level from each channel and each machine.

5.2 Stereophonic System High Frequency Equalization

a. A kit of capacitors, that may be substituted for C7 to C18 inclusive, provide flexible adjustment of the high frequency response.

b. Values of these capacitors, and the strapping required, should be established per paragraph 12.

Issued by
Engineering Department
Printed in U. S. A.
May 23, 1956
Issue #1

5.3 AM-1064 Control Unit

a. This unit was accurately adjusted at the factory and under normal conditions adjustment should not be necessary. However, the performance should be checked at installation as described below.

b. Thread a mixed 1 KC and 12 KC test film in the soundhead.

c. Set the monitor selector switch on the monitor control panel in position #4.

d. Set the system selector switch on the AM-1089 system control cabinet on STEREO and the EMERGENCY switch on NORMAL.

e. Depress the button on the AM-211 changeover cabinet associated with operating machine.

f. Set R-1 (center hole on the front of the control unit) in extreme counter-clockwise position initially.

g. With the film running, rotate R-1 clockwise slowly until a clean 1 KC signal is heard in the monitor speaker.

h. Rotate R-1 1/8 turn further clockwise for final positioning.

CAUTION: Do not rotate R-1 clockwise any further than required to fulfill the above.

5.4 AM-1028 Preamplifier

a. This unit includes a gain control and low frequency equalization for optical reproduction. The following adjustments, relating to the sound mechanism, should be made first.

(1) Establish the same exciter lamp current for each machine.

(2) Adjust potentiometers R-41 and R-42 to obtain the same nominal PEC voltage for each machine. Then readjust R-41 and R-42, as necessary, to obtain the same level from each machine at the output of the preamplifier.

NOTE: For XL Sound Mechanisms, the nominal PEC voltage should be 70. measured across terminals "+" and "S GND." with a vacuum tube voltmeter. When used with Sound Mechanisms such as the Simplex Four Star which contain a PEC polarizing resistor, it should be removed.

b. Gain Adjustment - Compare the levels of the optical and stereophonic systems at the output of the center channel power amplifier. Readjust R-14, as required, so that the level of the optical system is the same as the stereophonic system. If additional gain is necessary in the optical system, change the GRN-WH wire from the -12 db terminal to the 0 db terminal and readjust R-14.

c. Low Frequency Optical Equalization - A kit of resistors and capacitors that may be substituted for R-1 and C-1 is supplied to provide flexible adjustment of the low frequency response. Establish the values per paragraph 12.

5.5 High Frequency Optical Equalization

a. A kit of resistors and capacitors, that may be substituted for R-1, C-1 to C-4, provides flexible adjustment of this response. Establish the values per paragraph 12.

5.6 Non-Synchronous Attachment Matching

a. Terminals Rx and Ry are provided for the insertion of resistors and/or capacitors to match the attachment to the input of the AM-1028 Preamplifier and to adjust the gain or frequency response.

b. Determine the output impedance, output level and frequency characteristics of the attachment.

c. Insert resistors and/or capacitors, as needed, for quality results.

5.7 Matching the Fourth Channel Output to the Input of the Auditorium Speaker Amplifier

a. Transformer T-1 is provided to match the 500 ohm output of the AM-1064 Control Unit to the input of the auditorium speaker amplifier when it is other than an AM-1026 and AM-1027. The strapping for typical power amplifiers is described below.

b. Power amplifier with a 500 ohm input, one side grounded, nominal input level -20 db/6mw.

(1) No strapping is required.

c. Simplex Four Star power amplifier and other amplifiers, that work from a 10,000 to 20,000 ohm line, one side grounded, nominal input level -20 db/6mw.

(1) Remove the wire from the slider of the AUDITORIUM VOLUME control, R6, and connect to T-1, terminal #1.

(2) Connect the slider of R6 to T-1, terminal #7.

d. Power amplifier having a nominal input level of less than -20 db/6mw.

(1) Determine the attenuation required so that normal setting of the auditorium volume control will be approximately in mid-position, select the resistors from the table and connect per the schematic below.

Attenuation db	R43 and R45 Ohms	R44 Ohms
-10	1,000	750
-20	620	2,400
-30	510	7,500
-40	510	24,000

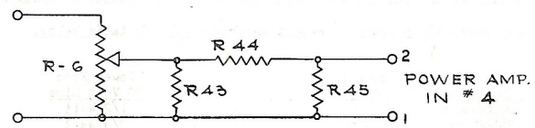

e. Balanced or Ungrounded Input

NOTE: A 500/500 ohm matching transformer (Peerless Type E-372-Q or equivalent) furnished by the customer is required.

(1) Mount this transformer in the cabinet in which the amplifier is housed.

(2) Connect one winding of this transformer to the POWER AMP IN #4 terminals in the AM-1089 System Control Cabinet and the other winding to the input of the amplifier.

6. P-3257 AUDITORIUM SPEAKER MATCHING TRANSFORMER

a. Connect to and strap the primary to match the output of the power amplifier driving the auditorium speakers per the table below.

b. Initially connect to and strap the secondary per the table below so that the power available in the line of the auditorium speakers is the rated power of the amplifier or the next higher power if the rating is in between the powers listed in the table. For example: If the rated power is 40 watts, strap for 64 watts.

Primary			Secondary			
Impedance Ohms	Connect to	Strap	Impedance Ohms	Connect to	Strap	Power in 70 Volt Line-Watts
16	7 and 12	9 to 10	625	1 and 6	3 to 4	8
12	7 and 11	9 to 10	470	1 and 5	3 to 4	11
8	8 and 11	9 to 10	312	2 and 5	3 to 4	16
4	7 and 12	7 to 10	156	1 and 6	1 to 4	32
		9 to 12			3 to 6	
2	8 and 11	8 to 10	78	2 and 5	2 to 4	64
		9 to 11			3 to 5	

c. Determine the normal volume level per paragraph 10 below and, if necessary, revise the connections to change the power available.

Issued by
Engineering Department
Printed in U. S. A.
May 23, 1956
Issue #1

7. AM-1026 OR AM-1027 POWER AMPLIFIER - File reference 40.03.

8. PU-1011 POWER UNIT - File reference 40.31 PU-1011 Power Unit, also 40.385 XL-101, Page 4, Paragraph 3.4

9. AM-1054 MONITOR AMPLIFIER AND CONTROL PANEL

9.1 Emergency Monitor Volume Control Setting

a. Adjustable resistor R1, provides pre-set monitor speaker volume when the monitor amplifier is "OFF" or has been removed and the monitor volume control is not effective.

NOTE: When the monitor amplifier is "OFF", R1 provides pre-set monitor volume automatically.

b. Turn monitor amplifier AC switch "OFF".

c. Disconnect wires from "SPKR" and "15 Ohm" terminals.

d. Strap "SPKR" and "15 Ohm" terminals.

e. Adjust R1 satisfactory monitor volume with main System Volume Control at normal setting.

10. LU-150 AND LU-151 AUDITORIUM SPEAKERS

a. Determine the normal number of watts per speaker by dividing the wattage rating of the power amplifier driving the Auditorium Speakers by the number of speakers.

b. Initially strap the primary of each transformer per the table below.

Primary Impedance	Connect to	Strap	Power From 70 Volt Line
10,000 ohms	1 - 6	3 to 4	1/2 Watt
7,500 ohms	1 - 5	3 to 4	2/3 Watt
5,000 ohms	2 - 5	3 to 4	1 Watt
2,500 ohms	1 - 6	1 to 4 & 3 to 6	2 Watts
1,250 ohms	2 - 5	2 to 4 & 3 to 5	4 Watts

c. Normal auditorium speaker volume should be obtained with the AUDITORIUM VOLUME control in the AM-1089 System Control Cabinet in mid-position. If the setting is near either end, changes in the strapping of the secondary of the P-3257 matching transformer (Paragraph 6) and of the matching transformer in each auditorium speaker may be necessary.

d. In some instances, it may be necessary to change the primary strapping of some auditorium speaker transformers to reduce the level of individual speakers.

e. LU-150 Matching Transformer Strapping - Strap secondary terminals 9 and 10 and connect terminals 8 and 11 (8 ohms impedance) to the voice coil of the speaker.

f. LU-151 Matching Transformer Strapping - Connect secondary terminals S1 and S2 (8 ohms impedance) to the voice coil of the speaker.

11. STAGE SPEAKER EQUIPMENT - File reference 40.385 XL-432, Page 28, Paragraph K.

12. SYSTEM FREQUENCY RESPONSE

a. After electrical and acoustic phasing have been completed, further listening tests should be made as a preliminary to adjustment of the system frequency response.

b. Selection of the frequency response that will give the highest quality sound reproduction in the auditorium is of extreme importance. The acoustic characteristics of auditoriums vary widely. Careful listening tests should be made and the response changed as necessary.

c. Optical and magnetic high frequency response adjustments are made in the AM-1089 system control cabinet by strapping and selection of resistors and capacitors. (File reference 40.15). Optical low frequency response adjustments are made in the AM-1028 preamplifier. (See X-L Installation Manual).

d. The frequency response of each of the three stereophonic channels should be the same.

13. UPPER AND LOWER MAGAZINE MODIFICATIONS - File reference 40.385, XL-432 and XL-436, Pages 10-12, Paragraph M.

14. XL OR FOUR STAR SOUND MECHANISM MODIFICATION - File reference 40.385, XL-432 and XL-436, Pages 12-13, Paragraph N.

15. XL PROJECTOR MECHANISM MODIFICATION - File reference 40.385, XL-432 and XL-436, Pages 13-18, Paragraph O.

ASSOCIATED DRAWINGS

Schematic	Wiring Diagram		
W-1172	W-1171	AM-211	Four Channel Changeover Cabinet
WD-1085	WE-1094	AM-1026	Power Amplifier
WD-1086	WE-1092	AM-1027	Power Amplifier
W-1126	W-1125	AM-1054	Monitor Amplifier and Control Panel
	G-2289	AM-1055	System Cabinet Kit
W-1142	G-2353	AM-1062	Monitor Panel and Cabinet Kit
W-1156	W-1157	AM-1064	Control Unit
W-1150	W-1155	AM-1065	Pre-Amplifier
	G-2401	AM-1066	Pre-Amplifier Cabinet
W-1215	W-1214	AM-1089	System Control Cabinet
W-1153	W-1152	PU-1011	Pre-Amplifier Power Supply
	G-2386	PU-1012	Pre-Amplifier Power Supply Cabinet
	W-1216	XL-532-536	Sound System
I-2311		AM-1089	Simplified Block Schematic
IN-130		AM-1089	Stereo HF Adjustments
IN-131		AM-1089	Optical HF Adjustments

ALTEC SERVICE CORPORATION
SIMPLEX
SOUND EQUIPMENT BULLETIN

EQUIPMENT INSTRUCTIONS - PICKUP ELIMINATION PARTS

AM-2168 (A-15 TYPE SYSTEM)
AM-2169 (A-30,B-30 TYPE SYSTEM)
AM-2170 (B-60,C-60 TYPE SYSTEM)
AM-2171 (THIRD PROJECTOR)

1. DESCRIPTION

A. Use. In A-15, B-30, B-60 and C-60 Type systems to reduce extraneous pickup. A 16 M.H. reactor is connected in the input circuit of both Volume Control Amplifiers. In each Amplifier, the 5000 ohm fixed cathode resistor is bypassed, with a .0005 MFD capacitor. In the AM-2069 N.S.-ANN. Switching Attachment, 2.5 M.H. reactors are placed in the "Mic." and "N.S." input circuits. A 2.5 M.H. reactor is added in each AM-1001 input. In the network, a series reactor and a .1 MFD capacitor in shunt are connected in the input circuit. Gain and frequency characteristics remain the same.

B. List of Parts.

Part Number	Description	Number Required: Two Projector Systems AM-2168	AM-2169	AM-2170	Third Projector AM-2171
AM-2172	Reactor Assembly	1	1	1	-
SN-512	Capacitor, .0005 MFD	2	4	4	2
SN-611	Terminal Strip	1	2	4	-
SN-674	Nut, #6-32	2	2	2	1
SN-683	Nut, #8-32	1	1	1	-
SN-684	Lockwasher, #1106	2	2	2	2
SN-685	Lockwasher, #1108	1	1	1	-
SN-952	Screw, #8-32 x 1¾	1	1	1	-
SN-956	Screw, #6-32 x ½ R.H.I.M.	2	2	2	1
SN-1035	Capacitor, .1 MFD	1	1	1	-
SN-1500	Reactor, 16 M.H.	2	2	2	1
SN-1503	Screw, Brass, #4-40 x 1"	2	2	2	1
SN-1506	Reactor, 2.5 M.H.	3	4	6	-
SN-1523	Lockwasher, #1104	4	4	4	1
SN-1525	Spacer	1	1	1	-
SN-1526	Mounting Plate	2	2	2	1
OA-415	Nut, Brass, #4-40	4	4	4	1

Issued by
Engineering Department
Printed in U.S.A.

December 13, 1948
Issue #2

(3) Connect SN-1035 Capacitor from other terminal of reactor to terminal of VS-1 to which Wh-Yel or Blk wires are connected.

(4) Strap same terminal of reactor, (3) above, to P-1 terminal, to which Wh-Bl or Bl wire is connected.

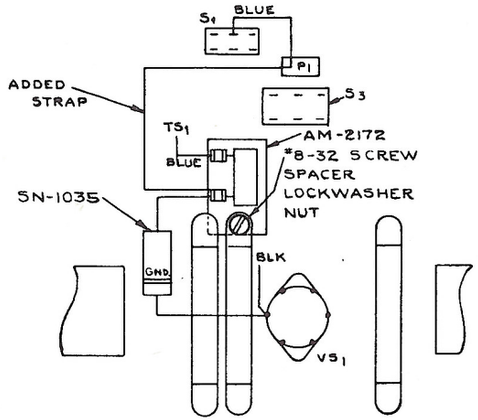

FIGURE #5

EQUIPMENT INSTRUCTION - AM-2173 PICKUP ELIMINATION PARTS "E" SYSTEM

1. DESCRIPTION.

A. Use. To reduce extraneous pickup in Type "E" Systems. A 16 M.H. reactor is placed in the input circuit of the AM-141 Amplifier and the first tube cathode resistor is bypassed with .02 and 10 MFD. Capacitors. In the second stage, the cathode resistor is increased and tapped for the grid return. High frequency equalization is obtained by bypassing the total cathode resistance. The same gain, frequency, and equalization characteristics are obtained with this revised circuit. A 2.5 M.H. reactor is placed in the AM-142 Amplifier input circuit, and a series reactor and shunt condenser (.1 MF) in the output circuit.

B. List of Parts.

1 - AM-2172	Reactor Assembly	1 - SN-1130	Resistor, 2,000 ohms, 1 watt, WW
1 - SN-540	Resistor, 25,000 ohms, ½ watt	1 - SN-1500	Reactor, 16 M.H.
1 - SN-611	Terminal Strip	1 - SN-1503	Screws, Brass 4-40
2 - SN-674	Nuts, 6-32	1 - SN-1506	Reactor, 2.5 M.H.
2 - SN-684	Lockwashers, #1106	1 - SN-1523	Lockwasher, #1104.
1 - SN-688	Resistor, 50,000 ohms, ½ watt	1 - SN-1524	Screw, 10-32 x 1½"
1 - SN-769	Resistor, 3,000 ohms, 1 watt WW	1 - SN-1525	Spacer, 1" x 1/4" ID
2 - SN-788	Capacitors, .01 MFD - 600 V.	1 - SN-1526	Mounting Plate
2 - SN-956	Screws, 6-32 x 1/4"	2 - OA-415	Nuts, Brass 4-40
1 - SN-1035	Capacitor, .1 MFD, 400 V.		

2. INSTALLATION.

A. Reactor in AM-141 Input Circuit (WD-158 and Figure #1).

(1) Remove rivet holding TS_1.

(2) Fasten SN-1526 Mounting Plate and TS_1 to chassis with one #6-32 x 1/4" R.H.I.M.S., nut and lockwasher supplied.

(3) Mount SN-1500 Reactor on SN-1526, using a #4-40 x 1" R.H. Brass M.S. and nut.

(4) Disconnect VS_1 grid lead and R_2 at J_1 and connect to one terminal of reactor.

(5) Strap J_1 terminal (from which grid lead and R_2 were removed) to other terminal of reactor.

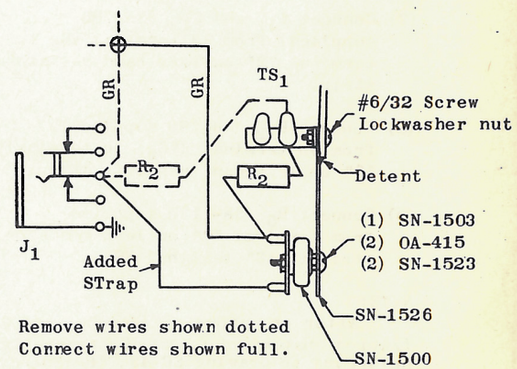

Remove wires shown dotted
Connect wires shown full.

FIGURE 1.

Issued by
Engineering Department
Printed in U.S.A.

October 29, 1945
Issue #1

B. Changes in VT_1 Circuit of AM-141 (WD-158 and Figure 2.)

(1) Connect C_2 and C_3 to cathode and suppressor terminal VT_1.

(2) Disconnect brown wire from VT_2 cathode, remove from cable, and connect to cathode and suppressor VT_1.

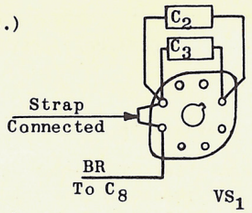

FIGURE 2.

C. Changes in VT_2 Circuit of AM-141 (WD-158 and Figure 3.)

(1) Remove resistors R_7, R_8, and R_5.

(2) Remove straps from terminals "1" to "4" on left hand resistor mounting strips.

(3) Connect strap from R_6 to R_9.

(4) Replace R_7 (SN-540 supplied.) Connect right side to same terminal and left side to R_6, leaving terminal "2" vacant.

(5) Replace R_8 (SN-688 supplied.) Connect right side to same terminal and left side to R_9, leaving terminal "3" vacant.

(6) Disconnect black wire to P_1 from SH terminal (VS_2) and connect to terminal "3" on left hand resistor strip.

(7) Connect C_{11} and C_{12} (SN-788 supplied) from SH terminal VS_2 to terminal "2" on left hand resistor strip.

(8) Connect R_{12} (SN-769 supplied) from SH terminal (VS_2) to terminal "3" on left hand resistor strip.

(9) Connect R_5 (SN-1130 supplied) from terminal "3" on left resistor strip to "C" terminal VS_2.

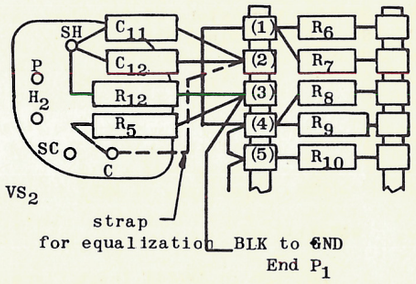

FIGURE 3.

NOTE:

After the above changes C_{11} and C_{12} are used for high frequency equalization instead of C_2 and C_3 as specified in the Tuning-Up Instructions. Referring to drawing SC-43, "Frequency Response characteristics with AM-141 and AM-142", the upper set of curves will be obtained by adjustment of the warping circuit with C_{11} and C_{12} strapped to VS_2 cathode. The lower set of curves will be obtained by adjustment of the warping circuit with this strap omitted.

D. Mounting Reactor in AM-142 Input Circuit (WD-159 and Figure 4.)

(1) Remove shielded input cable from R_{11}.

(2) Remove rivet from lower right hand resistor strip and mount an SN-611 terminal strip on chassis using a 6-32 x 1/4" R.H.M.I.S., lockwasher and nut supplied.

(3) Connect input cable to top lug of SN-611.

(4) Connect a 2.5 M.H. reactor (SN-1506) between top lug of SN-611 and "G" terminal of VS_1.

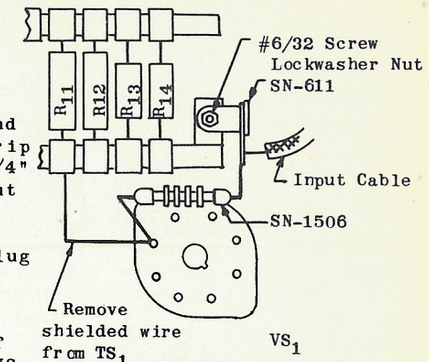

FIGURE 4.

E. Reactor in AM-142 Output Circuit (WD-159 and Figure 5).

(1) Remove screw from lower left hand side of T_1 (output transformer).

(2) Mount AM-2172 Reactor using a #10-32 x 1½" R.H.I.M.S. spacer, lockwasher, and the tapped hole from which screw was removed in (1) above.

(3) At T_1, remove blue wire (other end connected to TS_1 output) and connect to one terminal of reactor.

(4) Connect an SN-1035 Capacitor (.1 MF) from same terminal of reactor to T_3 (junction of R_{15} and black wire to R_{17}).

(5) Strap other terminal of reactor to T_1 (24 ohm terminal).

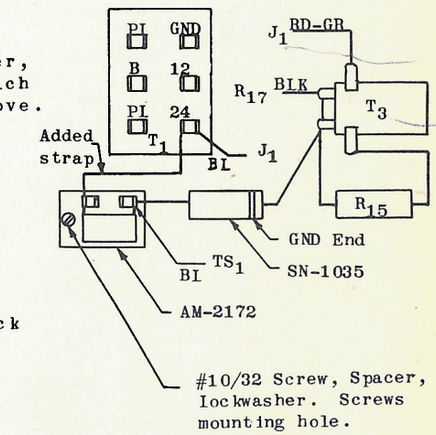

FIGURE 5.

ALTEC SERVICE CORPORATION

SIMPLEX SOUND SYSTEMS

EQUIPMENT INSTRUCTIONS - MODIFICATION AND NOISE PICKUP REDUCTION PARTS FOR SYSTEMS HAVING AM-170 N. S. AMPLIFIER -

AM-2174	A-15 SYSTEM
AM-2175	A-30, B-30 SYSTEM
AM-2176	B-60, C-60 SYSTEM

DESCRIPTION.

A. Use. AM-2174, AM-2175, AM-2176, parts are used in systems having an AM-170 N.S. Amplifier, to reduce extraneous pickup and maintain constant AM-1001 input impedence. In each AM-1001, a reactor is placed in the input circuit and the value of the VT_1 grid resistor is changed according to the type system. A series reactor and a capacitor in shunt are connected in the input of the network. Gain and frequency characteristics remain the same.

B. List of Parts.

Part Number	Description	NUMBER REQUIRED AM-2174	AM-2175	AM-2176
AM-2172	Reactor Assembly	1	1	1
SN-517	Resistor, 2 Meg.			4
SN-683	Nut, 8-32	1	1	1
SN-685	Lockwasher, #1108	1	1	1
SN-952	Screw, 8-32 x 1-3/4" R.H.I.M.	1	1	1
SN-1035	Capacitor, .1 MFD	1	1	1
SN-1478	Resistor, 1 Meg.		2	
SN-1506	Resistor, 2.5 M.H.	1	2	4
SN-1525	Spacer	1	1	1

INSTALLATION.

A. Change in each AM-1001 (WD-113 and Figure #1)

(1) Remove C_1 and C_2 in each AM-1001 Amplifier.

(2) Mount SN-1506 Reactor in place of C_1 and C_2.

(3) Remove R_1 in A-30, B-30, B-60, C-60 Systems and replace with value in following table:

Number of AM-1001 in Parallel	Type System	Value of Grid Resistor (R_1) VT_1 AM-1001
1	A-15	.5 Meg (Std)
2	A-30, B-30	1 Meg (SN-1478)
4	B-60, C-60	2 Meg (SN-517)

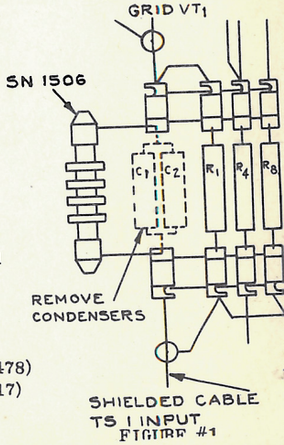

FIGURE #1

Issued by
Engineering Department
Printed in U.S.A.

October 29, 19
Issue

B. Reactor in Network (Figure #2)

(1) Mount reactor assembly below chassis by means of 8-32 x 1-3/4" R.H.I.M. screw and spacer using hole in chassis slightly above and to the left of socket VS_1.

(2) Wiring change:

a. LU-1003-X (WD-200), LU-1026 (WD-124). At S_1, remove blue wire (other end connects to TS_1, input) and connect to one of the reactor terminals.
b. LU-1002 (WD-116), LU-1003 (WD-117). At J_1, remove blue wire (other end connects to TS_1 input) and connect to one of the reactor terminals.

(3) Connect SN-1035 Capacitor from other terminal of reactor to terminal of VS_1 to which black wires are connected (Gnd).

(4) Strap same terminal of reactor, (3) above, to P_1 terminal, to which blue wire is connected.

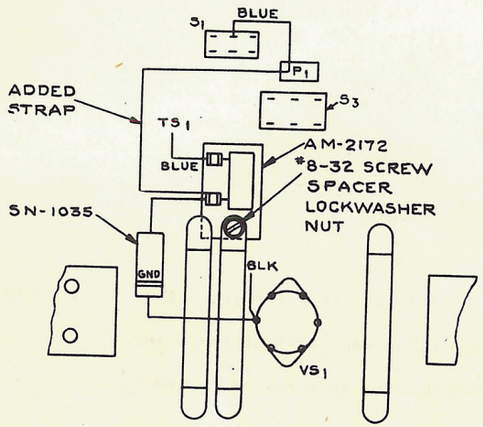

FIGURE #2

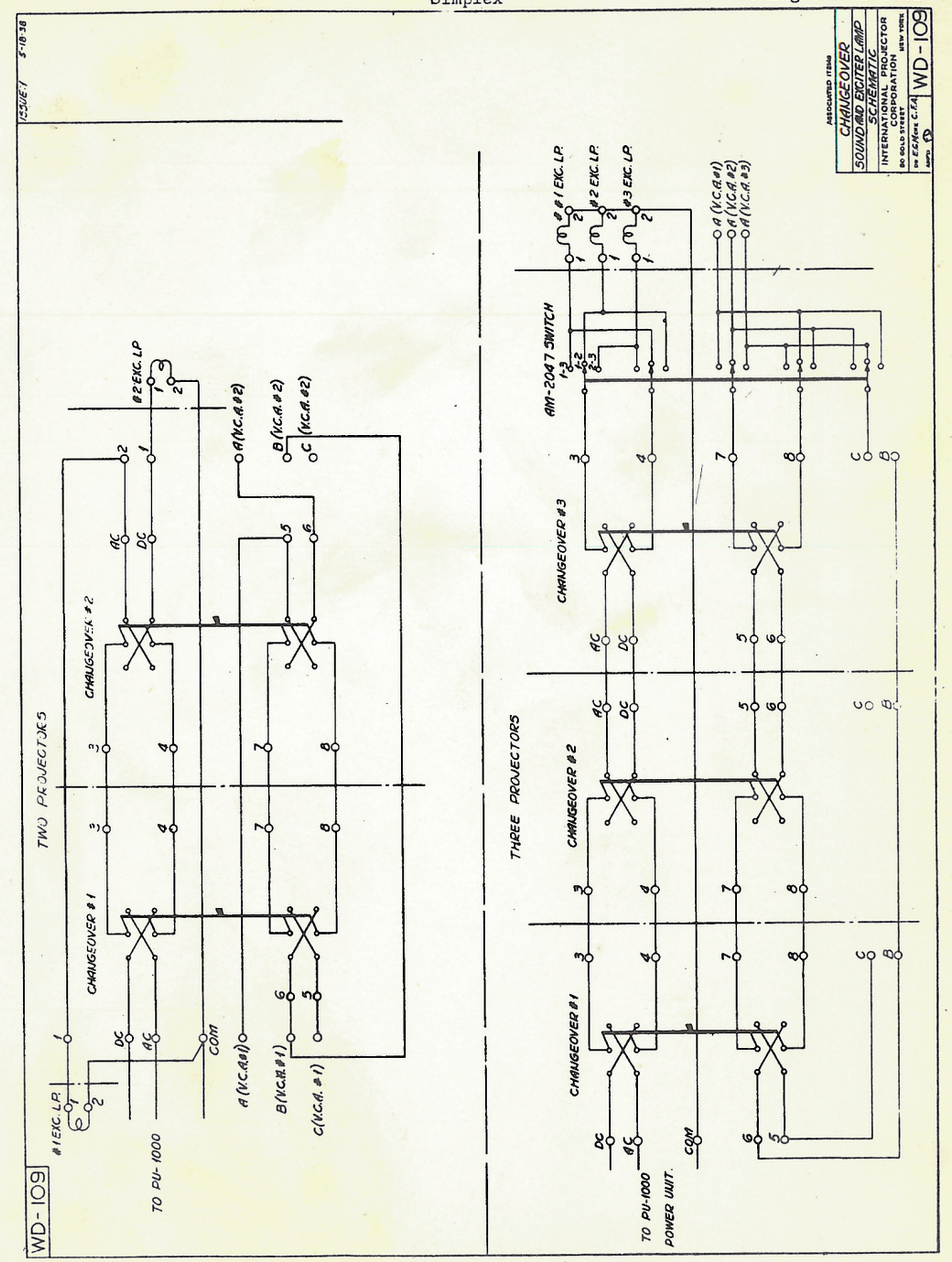
ISSUE 1 5-18-38
WD-109
TWO PROJECTORS
THREE PROJECTORS
CHANGEOVER #1
CHANGEOVER #2
CHANGEOVER #3
AM-2047 SWITCH
#1 EXC. LP.
#2 EXC. LP.
#3 EXC. LP.
A (V.C.A. #1)
B (V.C.A. #1)
C (V.C.A. #1)
A (V.C.A. #2)
B (V.C.A. #2)
C (V.C.A. #2)
A (V.C.A. #3)
TO PU-1000
TO PU-1000 POWER UNIT.
COM
AC
DC
ASSOCIATED ITEMS
CHANGEOVER
SOUND AND EXCITER LAMP
SCHEMATIC
INTERNATIONAL PROJECTOR CORPORATION
DO GOLD STREET NEW YORK
WD-109

CHANGEOVER SWITCH SCHEMATIC

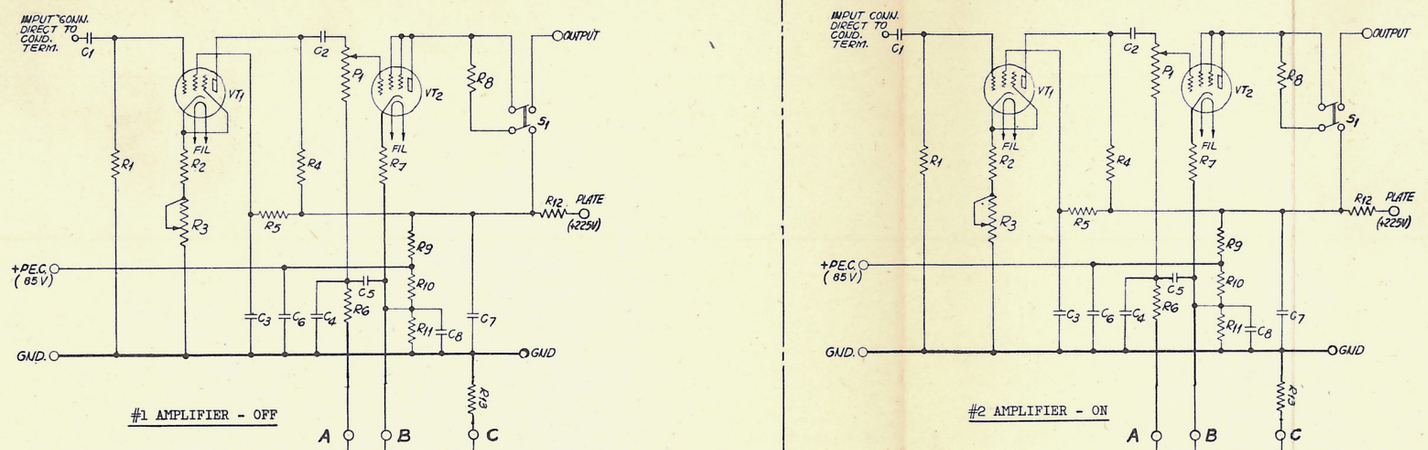

#1 AMPLIFIER - OFF

#2 AMPLIFIER - ON

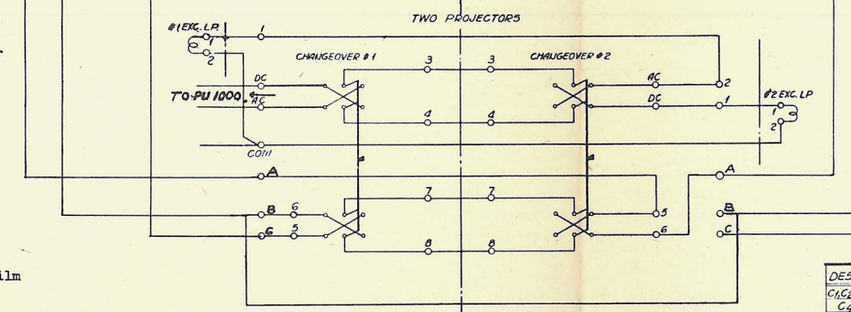

NOTE:

1 - As shown in this schematic, both changeover switches to the right or to the left make #1 film amplifier inoperative and #2 film amplifier operative.

2 - Circuit Conditions.
(a) Both switches to the right or left.
A & C of #1 film amplifier shorted.
A & B of #2 film amplifier shorted.
#1 film amplifier inoperative.
#2 film amplifier operative.

(b) Either switch to left and the other switch to right.
A & B of #1 film amplifier shorted.
A of #2 film amplifier and C of #1 film amplifier shorted.
#1 film amplifier operative.
#2 film amplifier inoperative.

3 - To test an individual film amplifier, disconnect leads going to terminals A, B, & C of this amplifier and place jumper across A & B after opening plate switch on other film amplifier.

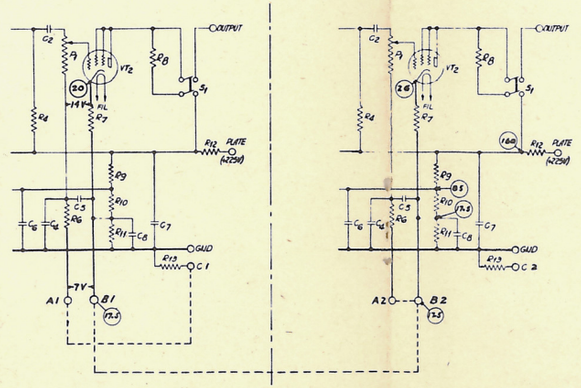

FUNDAMENTAL CHANGEOVER CIRCUIT SHOWING VOLTAGES INDICATED (SEE NOTE)

DESIG.	PART No.	APPARATUS
C1,C2,C3	SN-514	.05 MF-400V CAP. AEROVOX TYPE 2EM
C4	*503	10 MF-50V " " " EM
C5	*505	10 MF- " " " " 2EM WITH PAPER TUBE
C6,C7 C8	*506	8-8-10 MF AEROVOX TYPE 3E 4 8 10 / 750 250 50
R1	*539	500,000Ω-1WATT RES. I.R.C. TYPE BT-1
R2	*531	5,000Ω-½WATT " " " BT-½
R3	*532	5,000Ω-10WATT " " " AB-A
R4	*538	200,000Ω-½WATT " " " BT-½
R5	*537	2 MEG - " " " " "
R6,R7	*530	6,000Ω - " " " " "
R8	*540	25,000Ω - " " " " "
R9	*522	70,000Ω-1WATT " " " BT-1
R10	*523	55,000Ω- " " " " "
R11	*689	15,000Ω- " " " " "
R12	*527	25,000Ω- " " " " "
R13	*688	50,000Ω-½WATT " " " BT-½
P1	*541	500,000Ω 20-2 DB STEPS POT.
VT1	*792	6J7 METAL VACUUM TUBE (8-31 STOCK)
VT2	*707	6J7 METAL VACUUM TUBE
S1	*608	D.P.S.T. SWITCH

NOTE:

Numbers shown in ◯ refer to nominal voltages to ground as read on TA-4147 Test Meter (uncorrected for bridging effect of meter) with nominal tubes and line voltage nominal.

SIMPLEX FOUR STAR SOUND SYSTEMS
COMPOSITE SCHEMATIC
OF AM-1000 VOLUME CONTROL AMPLIFIERS
AND CHANGEOVER SWITCHES

ALTEC SERVICE CORPORATION
NEW YORK

AR-1125

DRAWN BY W.W.S. DATE 10-18-40
APP'D DATE
ISSUE 1 10-18-40 APP'D W.W.S.

1. SUBJECT - Replacement changeover switch for the Simplex AM-2065 and AM-2245 used in the AM-101 Volume Control Cabinet.

2. GENERAL - When our present stock of AM-2065 and AM-2245 Switches is depleted, the AP-1992 Switch will be furnished for use as the changeover switch in the Simplex AM-101 Volume Control Cabinets

2.1 The AP-1992 Switch consists of a Mossman 4202 Extra Heavy Duty Lever Switch complete with escutcheon plate and mounted on an AP-1993 Mounting Plate.

3. INSTALLATION.

(a) Disconnect cable form wiring and remove old switch assembly and mounting plate.

(b) Mount new AP-1992 Switch; strap, and connect cable form as shown on Drawing AP-1992.

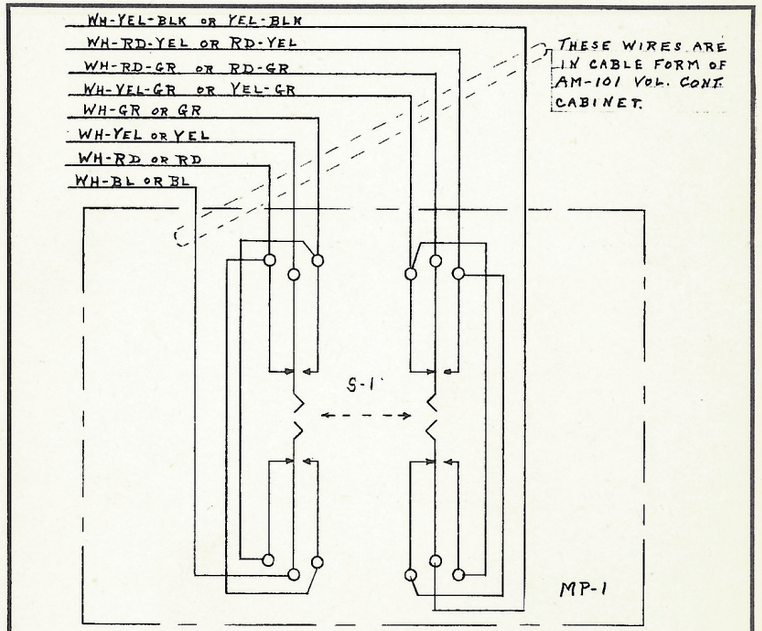

PARTS LIST	
S-1	MOSSMAN 4202-2 POS.-EXTRA HEAVY DUTY SWITCH WITH ESCUTCHEON PLATE. POS.1-LOCKING-LEFT IC-RIGHT IC POS 2-LOCKING-LEFT IC-RIGHT IC
MP-1	AP-1993 MTG. PLATE

ISSUE 1 2-24-48 APP'D		CHANGEOVER SWITCH WIRING DIAGRAM FOR SIMPLEX SOUND SYS.
	DRAWN DATE 2-24-48	ALTEC SERVICE CORPORATION NEW YORK
	APP'D DATE 2-24-48	AP-1992

Issued by
Engineering Department
Printed in U. S. A.

March 24, 1948
Issue #1

SOUND EQUIPMENT BULLETIN
SIMPLEX AM-2013 SWITCH

1. DESCRIPTION

Type - Three-position amplifier selector switch assembled on bracket with cable for interconnections and terminal strip for external connections.
Use - For emergency switching when 2 or more AM-1001 Amplifiers operate in parallel.
Settings
Mid Position - All system amplifiers in parallel.
Left Position - Amp. #1 or Amp. #1 and #3 operate. Amp. #2 or Amp.#2 and #4 are disconnected.
Right Position- Amp. #2 or Amp. #2 and #4 operate. Amp. #1 or Amp.#1 and #3 are disconnected.
Accessories - Dial plate and knob.
Dimensions - 4-1/4" high x 2-1/2" wide x 9" deep.
Weight - 2 lbs.
Associated Dwg. - WD-111.

2. INSTALLATION

The AM-2013 should be installed in the bottom of the AM-2023 Cabinet in place of the center apparatus blank per the sketch below, and connections made per the system wiring diagram.

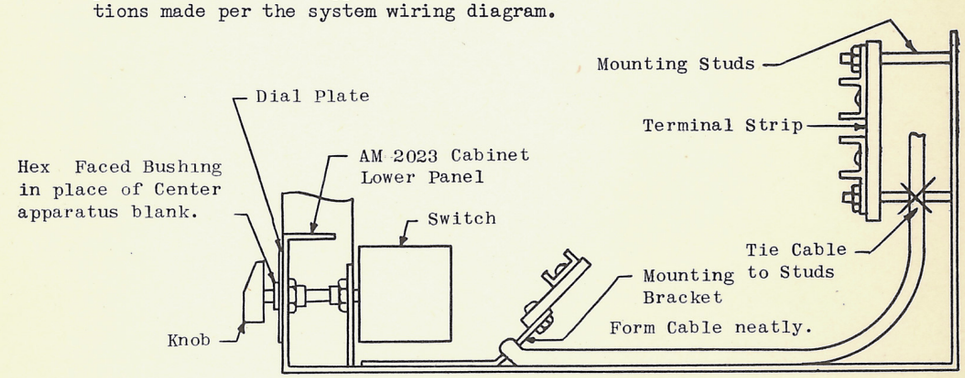

A. Grounding of Shielded Wires. The shields of the five shielded wires are bonded together at the switch, but are not grounded. To avoid loop grounds and noise, the shields should be grounded, during installation, only at the amplifier to which the cold water pipe ground wire is connected.

3. OPERATION

A. Normal. Set switch "1-2" (mid) position.

B. Emergency. If #1 (or #3) Amplifier fails, set switch in position "2" (right). If #2 (or #4) Amplifier fails, set switch in position "1" (left).

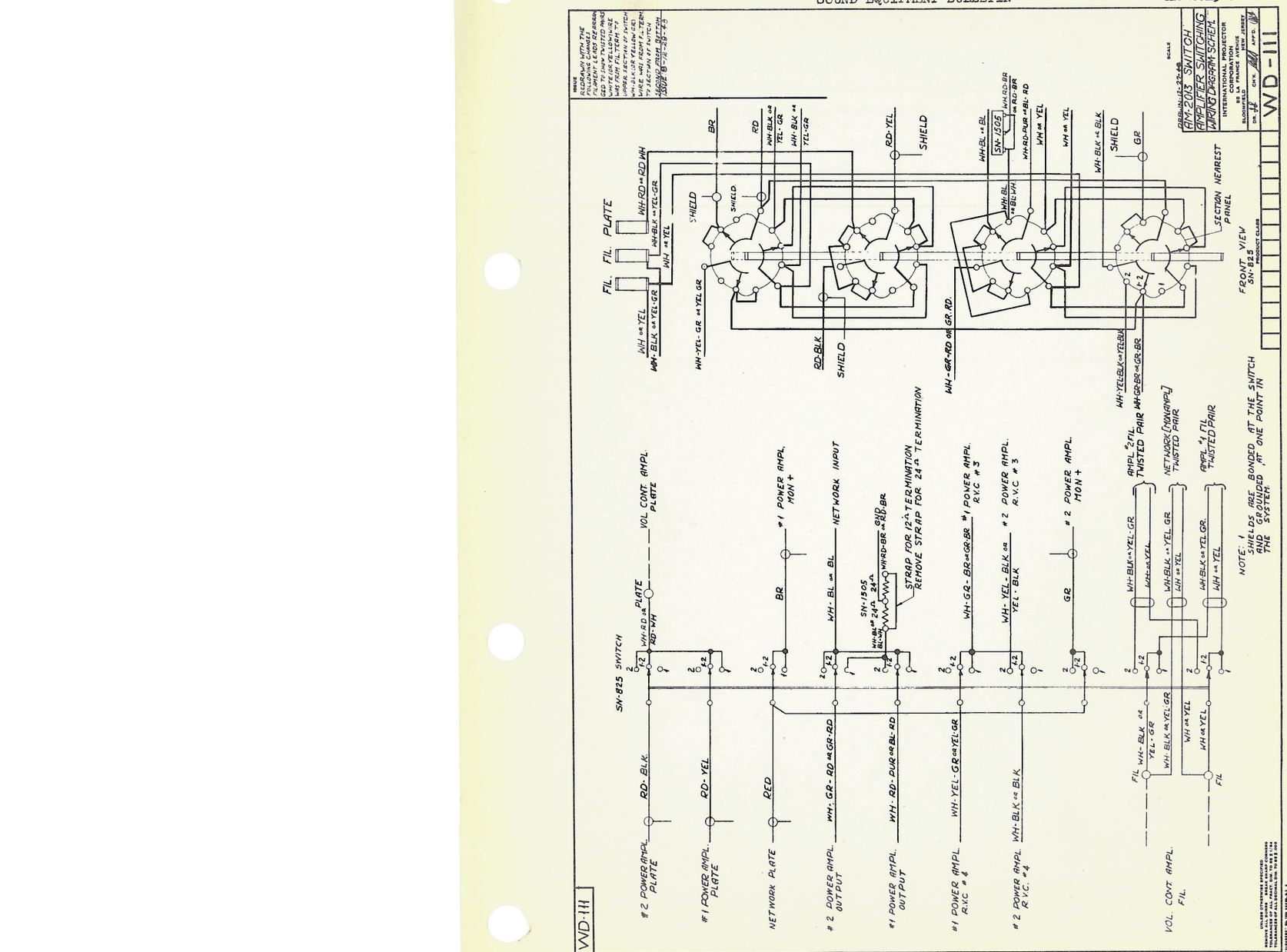
WD-111
AM-2013 SWITCH
AMPLIFIER SWITCHING
WIRING DIAGRAM SCHEM.
FRONT VIEW
SN-825
SECTION NEAREST PANEL
SN-825 SWITCH
#2 POWER AMPL. PLATE
#1 POWER AMPL. PLATE
NETWORK PLATE
#2 POWER AMPL. OUTPUT
#1 POWER AMPL. OUTPUT
#1 POWER AMPL. R.V.C. #4
#2 POWER AMPL. R.V.C. #4
VOL. CONT. AMPL. FIL.
VOL CONT. AMPL. PLATE
#1 POWER AMPL. MON +
NETWORK INPUT
#1 POWER AMPL. R.V.C. #3
#2 POWER AMPL. R.V.C. #3
#2 POWER AMPL. MON +
AMPL. #2 FIL. TWISTED PAIR
NETWORK (MONAMPL) TWISTED PAIR
AMPL. #1 FIL. TWISTED PAIR
SN-1505
STRAP FOR 12-A TERMINATION
REMOVE STRAP FOR 24-A TERMINATION
NOTE: SHIELDS ARE BONDED AT THE SWITCH AND GROUNDED AT ONE POINT IN THE SYSTEM.

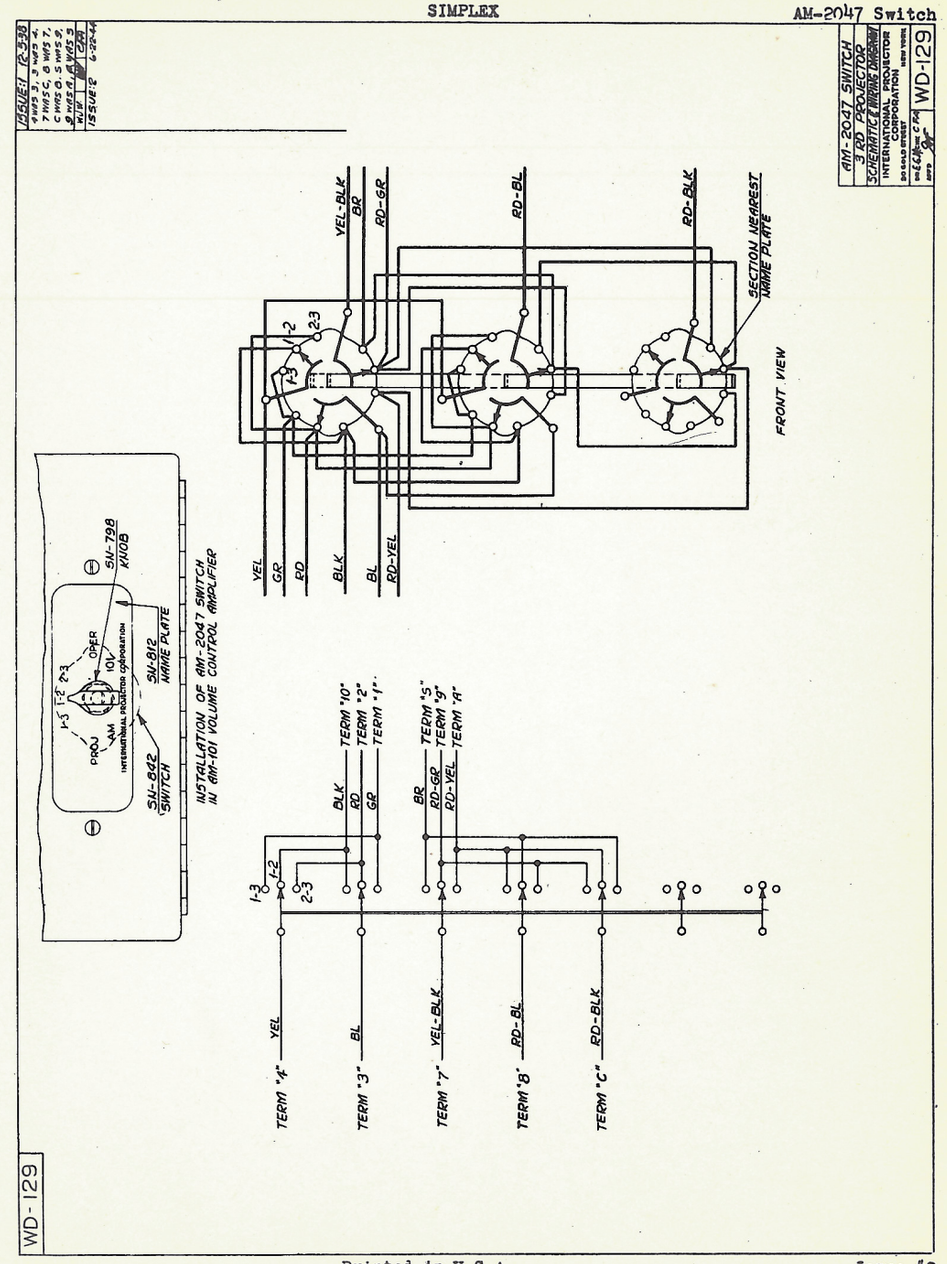
AM-2047 SWITCH
3 RD PROJECTOR
SCHEMATIC & WIRING DIAGRAM
INTERNATIONAL PROJECTOR CORPORATION
WD-129
ISSUE:1 12-3-38
ISSUE:2 6-22-44
SECTION NEAREST NAME PLATE
FRONT VIEW
YEL-BLK
BR
RD-GR
RD-BL
RD-BLK
YEL
GR
RD
BLK
BL
RD-YEL
SN-798 KNOB
SN-812 NAME PLATE
SN-842 SWITCH
INSTALLATION OF AM-2047 SWITCH IN AM-101 VOLUME CONTROL AMPLIFIER
TERM "10"
TERM "2"
TERM "1"
TERM "5"
TERM "9"
TERM "A"
TERM "4"
TERM "3"
TERM "7"
TERM "8"
TERM "C"
WD-129

1. DESCRIPTION

Type - Two-position amplifier selector switch assembled on bracket with cable for interconnections and terminal strip for external connections.

Use - For emergency switching of AM-1001 Amplifiers.

Settings

Left - Regular amplifier connected - output, external heater, plate circuits and "warping" circuit of emergency amplifier disconnected.

Right - Emergency amplifier connected and same circuit of regular amplifier disconnected. Input is not disconnected, allowing for testing and servicing while sound system is in operation.

Accessories - Dial plate and knob.
Dimensions - 3-1/4" high x 2-1/2" wide x 9" deep.
Weight - 2 lbs.
Associated Dwg. - WD-110 Schematic & Wiring.

2. INSTALLATION

The AM-2049 should be installed in the bottom of the AM-2023 Cabinet in place of the center apparatus blank per the sketch below, and connections made per the system wiring diagram.

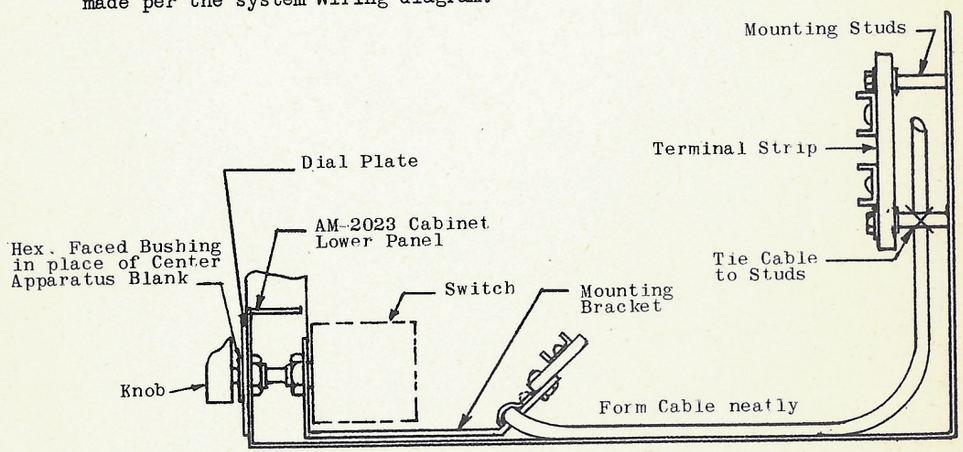

A. Grounding of Shielded Wires. The shields of the five shielded wires are bonded together at the switch, but are not grounded. To avoid loop grounds and noise, the shields should be grounded, during installation, only at the amplifier to which the cold water pipe ground wire is connected.

3. OPERATION

A. Normal. Set switch in "Reg." (left) position.

B. Emergency. Set switch in "Emerg." (right) position.

Simplex AM-2049 Switch

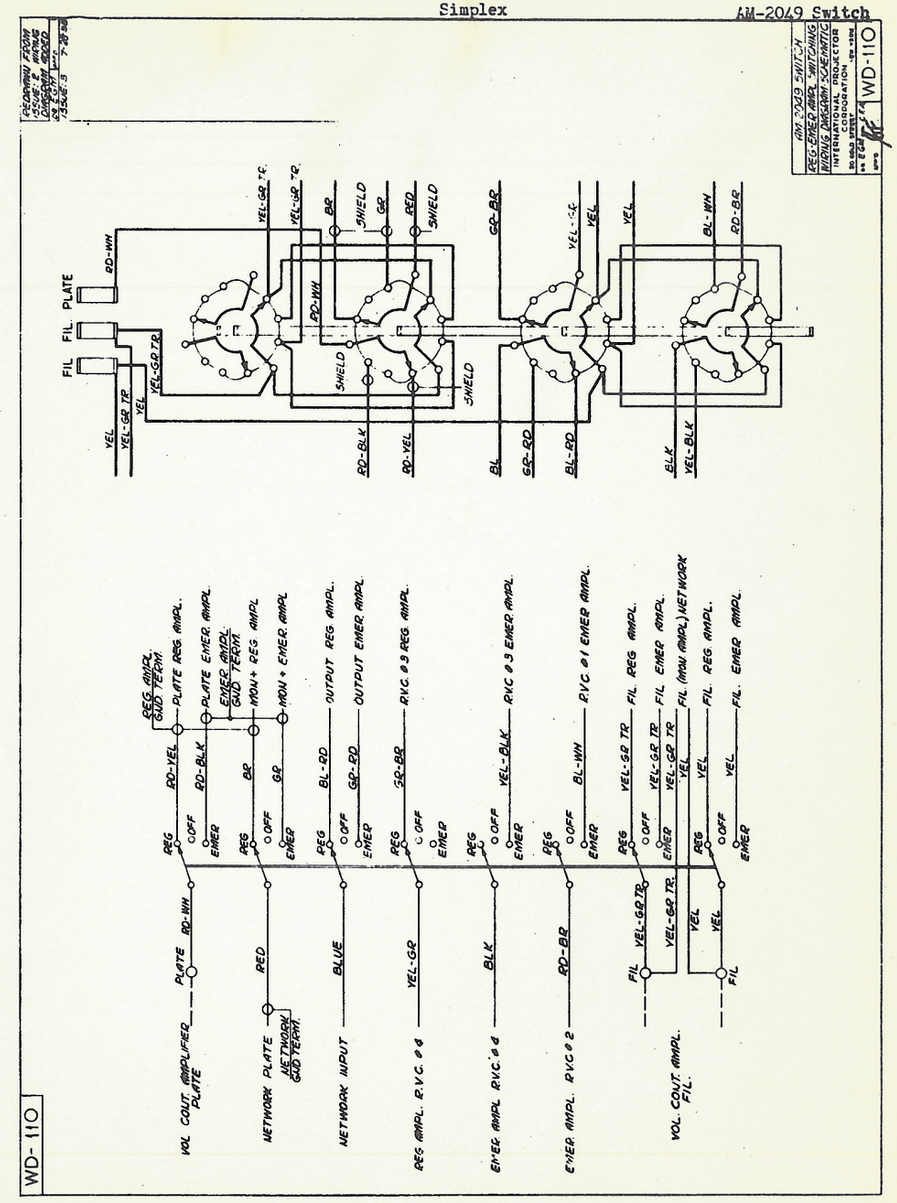

WD-122

ISSUE:-1 6-10-58

LEGEND:-

MICROPHONE CABLE, SHIELDED

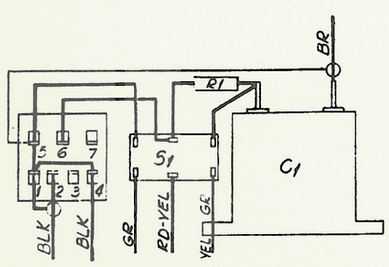

DESIG	PART No	APPARATUS
C1	SN-991	1 MF - 200 V. CAP. AEROVOX TYPE 250
R1	* 864	1/2 MEG - 1/2 WATT RES I.R.C. TYPE BT 1/2
T1	* 890	500 : 50,000 TRANSF. FERRANTI #C-201
S1	* 565	D.P.D.T. SWITCH

NOTE:-

1- THE AM-2053 N.S. SWITCHING ATTACHMENT IS INSTALLED IN AM-101 VOLUME CONTROL AMPLIFIER #1 IN PLACE OF THE NAMEPLATE AT THE BOTTOM OF THE CABINET AND CONNECTIONS MADE TO THE TERMINAL STRIPS IN THE CABINET. THE STRAP BETWEEN TERMINALS "B" & #6 SHOULD BE REMOVED.

2- ON T_1 CONNECTIONS TO TERMINALS #2 AND #4 ARE FOR 500Ω N.S. INPUT. FOR 200Ω INPUT CONNECT TO TERMINALS #3 AND #4.

LEGEND:-

= TWISTED PAIR SHIELDED CABLE. GROUND SHIELD ONLY AT VOLUME CONTROL AMPLIFIER.

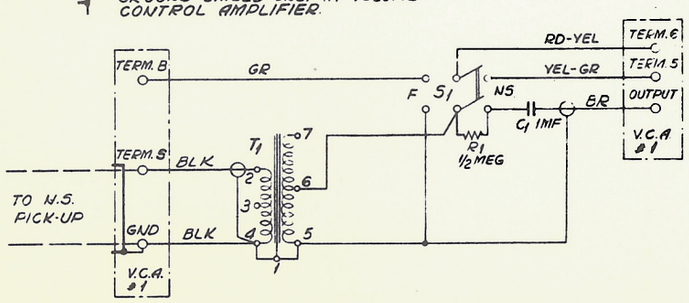

AM-2053
N.S. SWITCHING ATTACHMENT
WIRING DIAGRAM - SCHEMATIC
INTERNATIONAL PROJECTOR CORPORATION
90 GOLD STREET NEW YORK
DR. EGNICHK C.F.A. APVD FD WD-122

ALTEC SERVICE CORP.
Simplex
AM-2053 Switch
40.41



WD-122

ISSUE:-1 6-10-58

LEGEND:-
MICROPHONIE CABLE, SHIELDED

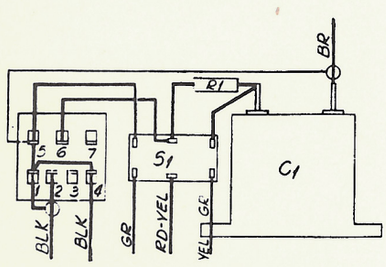

DESIG	PART No	APPARATUS
C1	SN-891	1 MF - 200 V. CAP. AEROVOX TYPE 250
R1	* 864	1/2 MEG - 1/2 WATT RES. I.R.C. TYPE BT 1/2
T1	* 890	500 : 50,000 TRANSF. FERRANTI #C-201
S1	* 565	D.P.D.T. SWITCH

NOTE:-
1- THE AM-2053 N.S. SWITCHING ATTACHMENT IS INSTALLED IN AM-101 VOLUME CONTROL AMPLIFIER # 1 IN PLACE OF THE NAMEPLATE AT THE BOTTOM OF THE CABINET AND CONNECTIONS MADE TO THE TERMINAL STRIPS IN THE CABINET. THE STRAP BETWEEN TERMINALS "B" & #G SHOULD BE REMOVED.

2- ON T1 CONNECTIONS TO TERMINALS # 2 AND # 4 ARE FOR 500Ω N.S. INPUT. FOR 200Ω INPUT CONNECT TO TERMINALS # 3 AND #4.

LEGEND:-
= TWISTED PAIR SHIELDED CABLE. GROUND SHIELD ONLY AT VOLUME CONTROL AMPLIFIER.

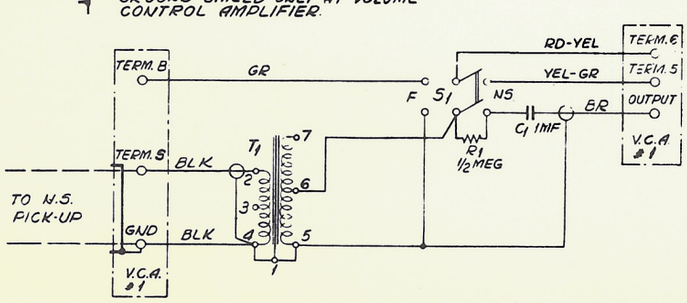

AM-2053
N.S. SWITCHING ATTACHMENT
WIRING DIAGRAM - SCHEMATIC
INTERNATIONAL PROJECTOR CORPORATION
90 GOLD STREET NEW YORK
DR. EGMAN C.F.A. APPD FD WD-122

1. DESCRIPTION

Type	- Three-position special input selector switch assembled on bracket terminal strips for external connections.
Use	- For selective switching of three inputs - Film, Microphone, or Phonograph.
Settings	
Middle	- Film
Right	- Phonograph
Left	- Microphone
Accessories	- Dial plate and knob.
Dimensions	- 3-1/4" high x 7" wide x 9" deep.
Associated Dwg.	- WD-169 Schematic & Wiring.

2. INSTALLATION

The AM-2102 Switch should be installed in the bottom of the AM-2023 Cabinet in place of the center apparatus blank per the sketch below, and connections made per the system wiring diagram.

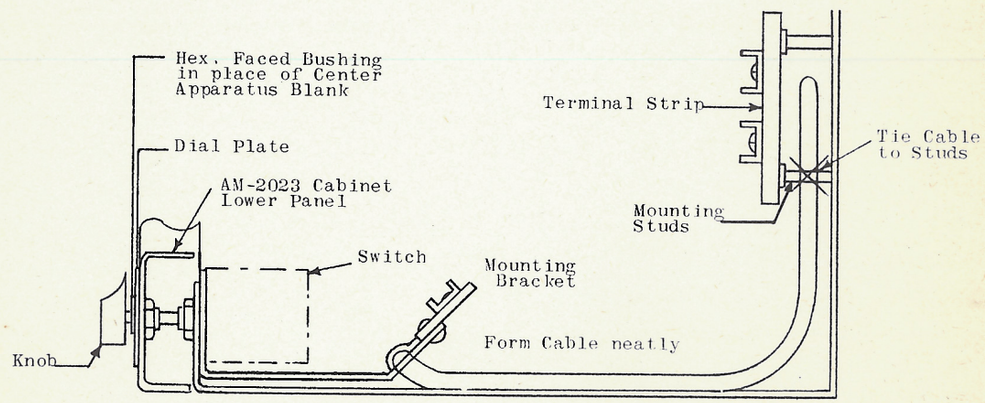

A. Grounding of Shielded Wires. The shields of the 7 shielded wires are bonded together at the switch, but are not grounded. To avoid loop grounds and noise, the shields should be grounded, during installation, at one point only in accordance with the system wiring diagram.

3. OPERATION

A. Film Reproduction. Set the selector switch in "FILM" (mid) position. System operation is normal, and the special inputs are disconnected.

B. Microphone or Phonograph Reproduction. Set the selector switch in "MICRO" (left) or "PHONO" (right) position respectively.

ALTEC SERVICE CORPORATION

AM-2102 SWITCH

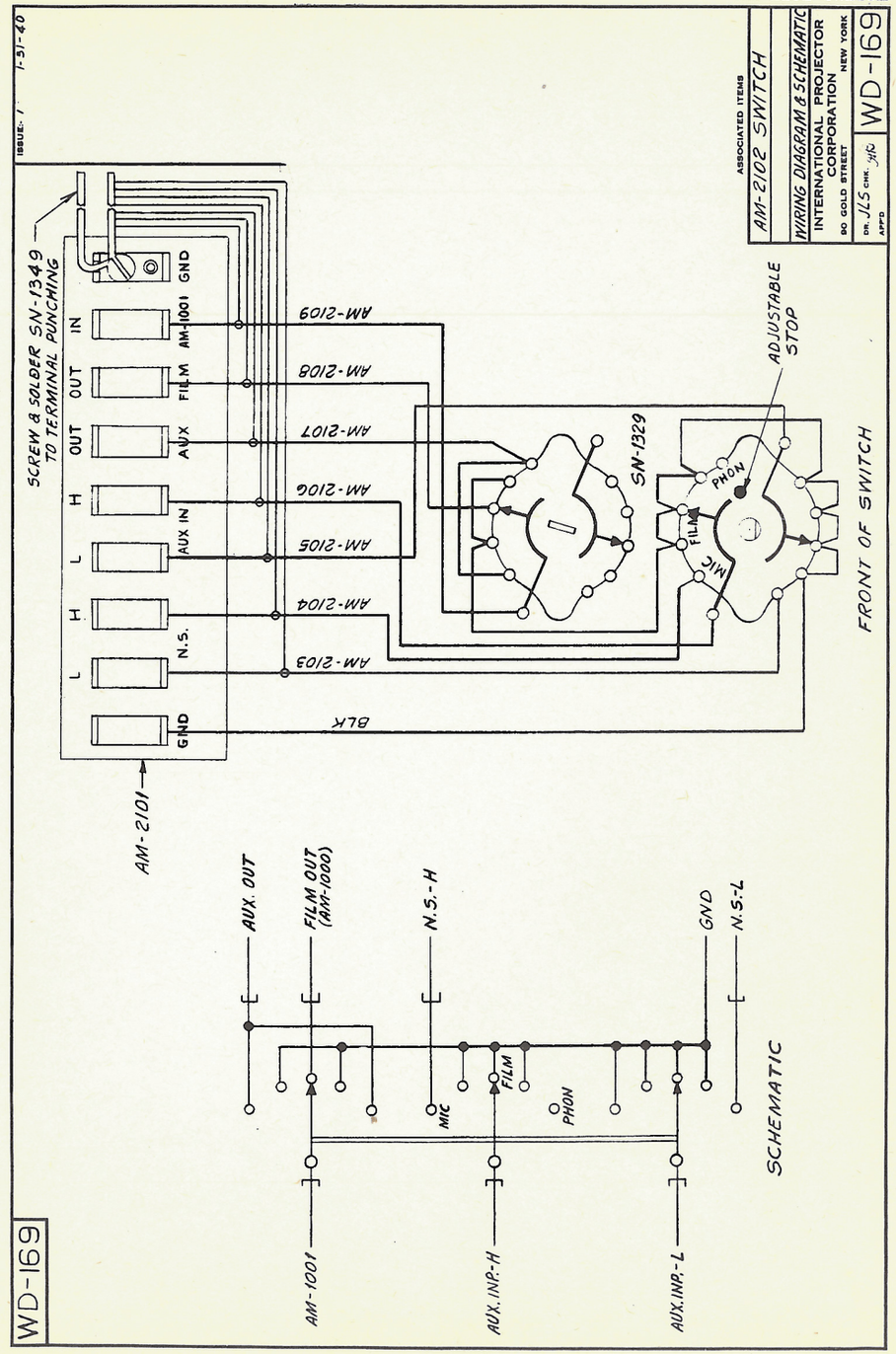

1. DESCRIPTION

Type - Three-position amplifier selector switch assembled on bracket with cable for interconnections and terminal strip for external connections. Also provided with three pairs of filament terminals for individual supply to filaments of three volume control amplifiers.

Use - For emergency switching when 2 or more AM-1001 Amplifiers operate in parallel and separate volume control amplifier filament supplies are required.

Settings

Mid Position - All system amplifiers in parallel.
Left Position - Amp. #1 or Amp. #1 and #3 operate. Amp. #2 or Amp. #2 and #4 are disconnected.
Right Position - Amp. #2 or Amp. #2 and #4 operate. Amp. #1 or Amp. #1 and #3 are disconnected.

Accessories - Dial plate and knob.
Dimensions - 3-1/4" high x 7" wide x 9" deep.
Weight - 2 lbs.
Associated Dwg. - WD-170 - Schematic & Wiring Diagram.

2. INSTALLATION

The AM-2122 should be installed in the bottom of the AM-2023 Cabinet in place of the center apparatus blank per the sketch below, and connections made per the system wiring diagram.

When four amplifiers are installed, amplifiers #1 and #3 inputs are permanently paralleled, and amplifiers #2 and #4 are similarly connected. Inoperative amplifier(s) (output, external heater and plate and the warping circuits) may therefore be disconnected and the system operated on the remaining amplifier(s). Only one warping circuit is used at a time. The inputs are not disconnected in order that the inoperative amplifier(s) may be tested and serviced while the system is operating.

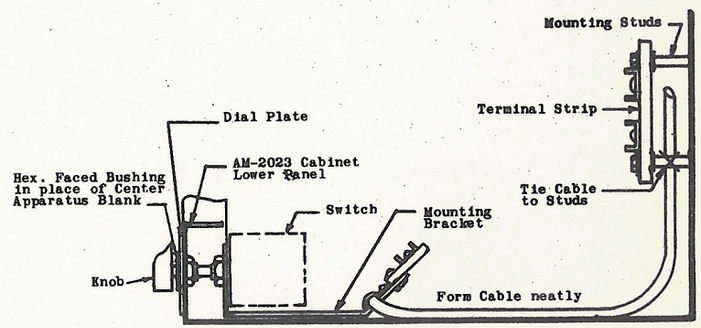

A. Grounding of Shielded Wires. The shields of the 6 shielded wires are bonded together at the switch, but are not grounded. To avoid loop grounds and noise, the shields should be grounded, during installation, at one point only in accordance with the system wiring diagram.

3. OPERATION

A. Normal. Set switch in "1-2" (mid) position - all system amplifiers operate in parallel.

B. Emergency. If #1 (or #3) amplifier fails, set switch in position "2" (right). If #2 (or #4) amplifier fails, set switch in position "1" (left).

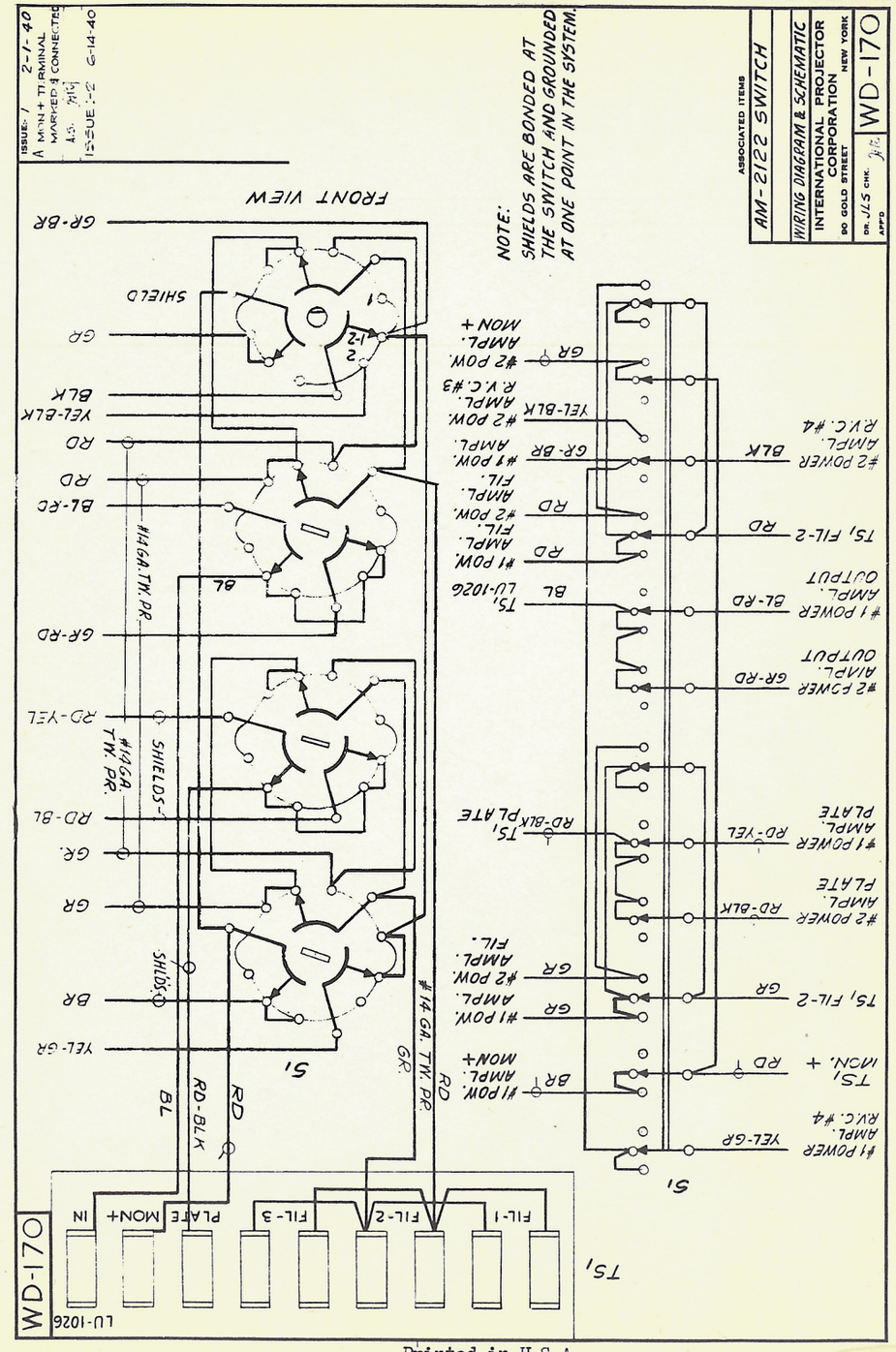
ISSUE: 1 2-1-40
A MON + TERMINAL MARKED & CONNECTED
ISSUE: 2 6-14-40
NOTE:
SHIELDS ARE BONDED AT THE SWITCH AND GROUNDED AT ONE POINT IN THE SYSTEM.
ASSOCIATED ITEMS
AM-2122 SWITCH
WIRING DIAGRAM & SCHEMATIC
INTERNATIONAL PROJECTOR CORPORATION
90 GOLD STREET NEW YORK
DR. JLS CHK.
APP'D
WD-170
FRONT VIEW
GR-BR
SHIELD
GR
BLK
YEL-BLK
RD
BL-RD
GR-RD
RD-YEL
RD-BL
GR.
BR
YEL-GR
#14 GA. TW. PR.
SHIELDS
S1
#2 POW. AMPL. MON +
#2 POW. AMPL. R.V.C. #3
#1 POW. AMPL. FIL.
#1 POW. AMPL. FIL.
TS1 LU-1026
#2 POWER AMPL. R.V.C. #4
TS1 FIL-2
#1 POWER AMPL. OUTPUT
#2 POWER AMPL. OUTPUT
TS1 PLATE
#1 POWER AMPL. PLATE
#2 POWER AMPL. PLATE
TS1 MON. +
#1 POWER AMPL. R.V.C. #4
TS1
IN
MON+
PLATE
FIL-3
FIL-2
FIL-1
LU-1026

1. DESCRIPTION.

The AM-2197, supplied when one or two AM-1019 Amplifiers are used, is a three-position amplifier selector switch assembled on a bracket and provided with a terminal strip for external connections. A dial plate and knob are supplied.

When one AM-1019 Amplifier is employed, the switch is normally set in position #1. In case the amplifier becomes defective, the switch is set in position #2 and the system operates from the driver amplifier.

When two AM-1019 Amplifiers are used, the switch is normally set in mid-position and the two amplifiers operate in parallel. In case amplifier #1 becomes inoperative, the switch is set in position #2 and in like manner is set in position #1 if #2 amplifier becomes inoperative, thereby disconnecting the inoperative amplifier.

2. INSTALLATION.

The AM-2197 should be installed in the bottom of the AM-2023 Cabinet in place of the right hand apparatus blank per the sketch below and connections made per the system wiring diagram.

When one AM-1019 Amplifier is used, terminals 2 and 5 should be strapped and when two of these amplifiers are used, terminals 3 and 6 should be strapped.

3. OPERATION.

A. Normal.

(1) One AM-1019 Amplifier used. Set switch in position "1".

(2) Two AM-1019 Amplifiers used. Set switch in position "1-2".

B. Emergency.

(1) One AM-1019 Amplifier used. Set in position "2". The AM-1019 is disconnected and operation continues on the driver amplifier.

(2) Two AM-1019 Amplifiers used. If #1 amplifier fails, set switch in position "2". If #2 amplifier fails set switch in position "1". The defective amplifier is disconnected and operation continues on the other amplifier.

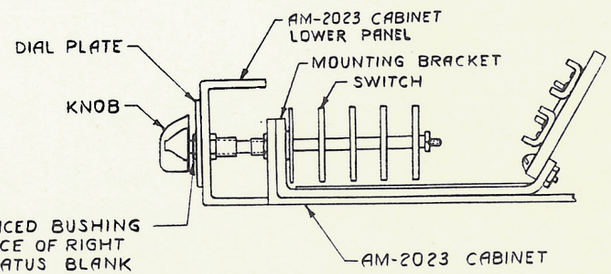

4. ASSOCIATED DRAWING. WC-1021 AM-2197 Switch, Schematic and Wiring Diagram.

Issued by
Engineering Department
Printed in U. S. A.
April 1, 1949
Issue #1

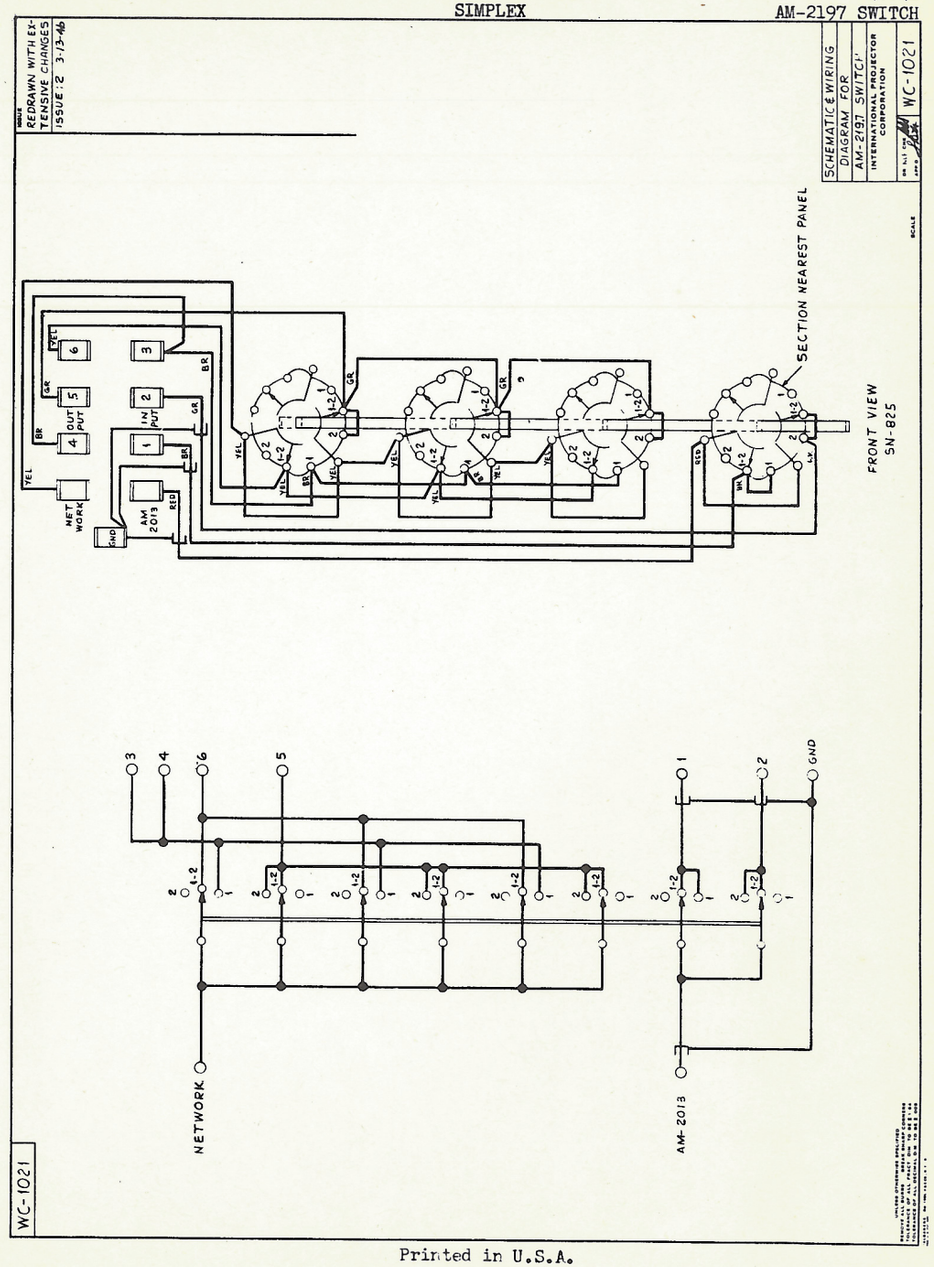
REDRAWN WITH EXTENSIVE CHANGES
ISSUE:2 3-13-46
SCHEMATIC WIRING DIAGRAM FOR AM-2197 SWITCH
INTERNATIONAL PROJECTOR CORPORATION
WC-1021
SECTION NEAREST PANEL
FRONT VIEW
SN-825
NET WORK
AM 2013
INPUT
OUTPUT
GND
NETWORK
AM-2013
WC-1021

1. DESCRIPTION

CODE NUMBER	DESCRIPTION	USE
LU-1022	Consists of two 3-position selector switches with external cable form, two dial plates, and two resistors.	Provides for individual testing of two H.F. and two L.F. speakers.
LU-1044	Consists of two 3-position selector switches with external cable form, two dial plates, and two resistors.	Provides for individual testing of two L.F. speakers, or four L.F. speakers in groups of two, and individual testing of two H.F.speakers.
LU-1063	Consists of one 3-position and one 5-position selector switch with external cable form, two dial plates and two resistors.	Provides for individual testing of two H.F. and four L.F. speakers.

ASSOCIATED DRAWINGS: LU-1022 WD-131 Schematic & Wiring
LU-1044 WD-143 " " "
LU-1063 WD-168 " " "

2. INSTALLATION

The two switches and dial plates should be installed on the panel of the network in place of the apparatus blanks as shown on the associated drawing. The cable should run beneath the chassis, be formed neatly and connected to TS_2 or TS_3 in the network. The two resistors should be installed underneath the chassis, connected to TS_2 or TS_3 and the following wiring changes made in the network (see Network Dwgs.):

A. On TS_2 remove straps between terminals "1 & 2", "5 & 6", and "6 & 7" when using LU-1003 Network, and on TS_3 remove straps between terminals "1, 2 & 3" and "7, 8, 9, 10 & 11" when using LU-1026 Network.

3. OPERATION

A. Normal. (LU-1022 & LU-1044 Switches) Set "HF" and "LF" selector switches in position "1-2", and the lower "HF" and "LF" switches on the panel in "ON" position. The two high frequency units then operate in parallel across the high frequency leg of the network, and the two low frequency units in parallel across the low frequency leg of the network. Where 4 L.F. units are installed they will be operating in series parallel across low frequency leg of network.

Normal (LU-1063 Switch). Set "HF" and "LF" selector switches in position "1-2" and "1-4" respectively. Set the lower "HF" and "LF" switches on the panel in "ON" position. The two high frequency units then operate in parallel across the high frequency leg of the network, and the four low frequency units operate in series parallel across the low frequency leg of the network.

B. Individual Loudspeaker Testing. Each speaker may be tested as follows, and defective units replaced.

H.F. Speakers (LU-1022 & 1044 & 1063 Switches). Set the lower "LF" switch in "OFF" position, and the upper "HF" selector switch successively in positions "1" and "2". Position "1" tests speaker #1 and disconnects speaker #2. Position "2" tests speaker #2 and disconnects speaker #1. When using the LU-1022 Switch an 18 ohm resistor is substituted for the disconnected speaker to maintain constant impedance and prevent overloading of the speaker under test. When using the LU-1044 Switch this resistor is 24 ohms, and when using the LU-1063 Switch it is 20 ohms.

If either unit is defective, set lower "HF" switch in "OFF" position, and the lower "LF" switch in "ON" position. The network and high frequency speakers are disconnected, and the system may be operated temporarily on two low frequency speakers.

L.F. Speakers (LU-1022 Switch). Set the lower "HF" switch in "OFF" position, and the upper "LF" selector switch successively in positions "1" and "2". Position "1" tests speaker #1 and disconnects speaker #2. Position "2" tests speaker #2 and disconnects speaker #1. A 12-ohm resistor is substituted for the disconnected speaker to maintain constant impedance and prevent overloading of the speaker under test. If either speaker is defective, set the "LF" selector switch in position to use the operative speaker, and the lower "HF" switch in "ON" position. The system may be operated temporarily on one low frequency and two high frequency speakers in an emergency.

L.F. Speakers (LU-1044 Switch). Set the lower "HF" switch in "OFF" position and the upper "LF" selector switch successively in positions "1" and "2".

With four LU-1010 Speakers, position "1" tests speakers #1 and #2 in series, and disconnects speakers #3 and #4. Position "2" tests speakers #3 and #4 in series, and disconnects

speakers #1 and #2. A 12-ohm resistor is substituted for the disconnected speakers to maintain constant impedance and prevent overloading of the speakers under test.

With two LU-1010 Speakers, position "1" tests speaker #1 and disconnects speaker #2. Position "2" tests speaker #2 and disconnects speaker #1. A 6-ohm resistor is substituted for the disconnected speaker to maintain constant impedance and prevent overloading of the speaker under test.

If either speaker or group of speakers is defective, set the "LF" selector switch in position to use the operative speaker(s), and the lower "HF" switch in "ON" position. The system may then be operated temporarily on one low frequency speaker or group of low frequency speakers and two high frequency speakers.

L.F. Speakers (LU-1063 Switch).. Set the lower "HF" switch in "OFF" position and the upper "LF" selector switch successively in positions "1", "2", "3" and "4". Position "1" tests speaker #1 and disconnects speaker #2, #3, and #4. Similarly positions "2", "3" and "4" test like numbered speakers individually and disconnect all other speakers. An L-Pad is substituted for the disconnected speakers to maintain constant impedance and prevent overloading of the speakers under test.

If one of the speakers is defective, set the "LF" selector switch to use an operative speaker and the lower "HF" switch in "ON" position. The system may then be operated temporarily on one low frequency speaker and two high frequency speakers.

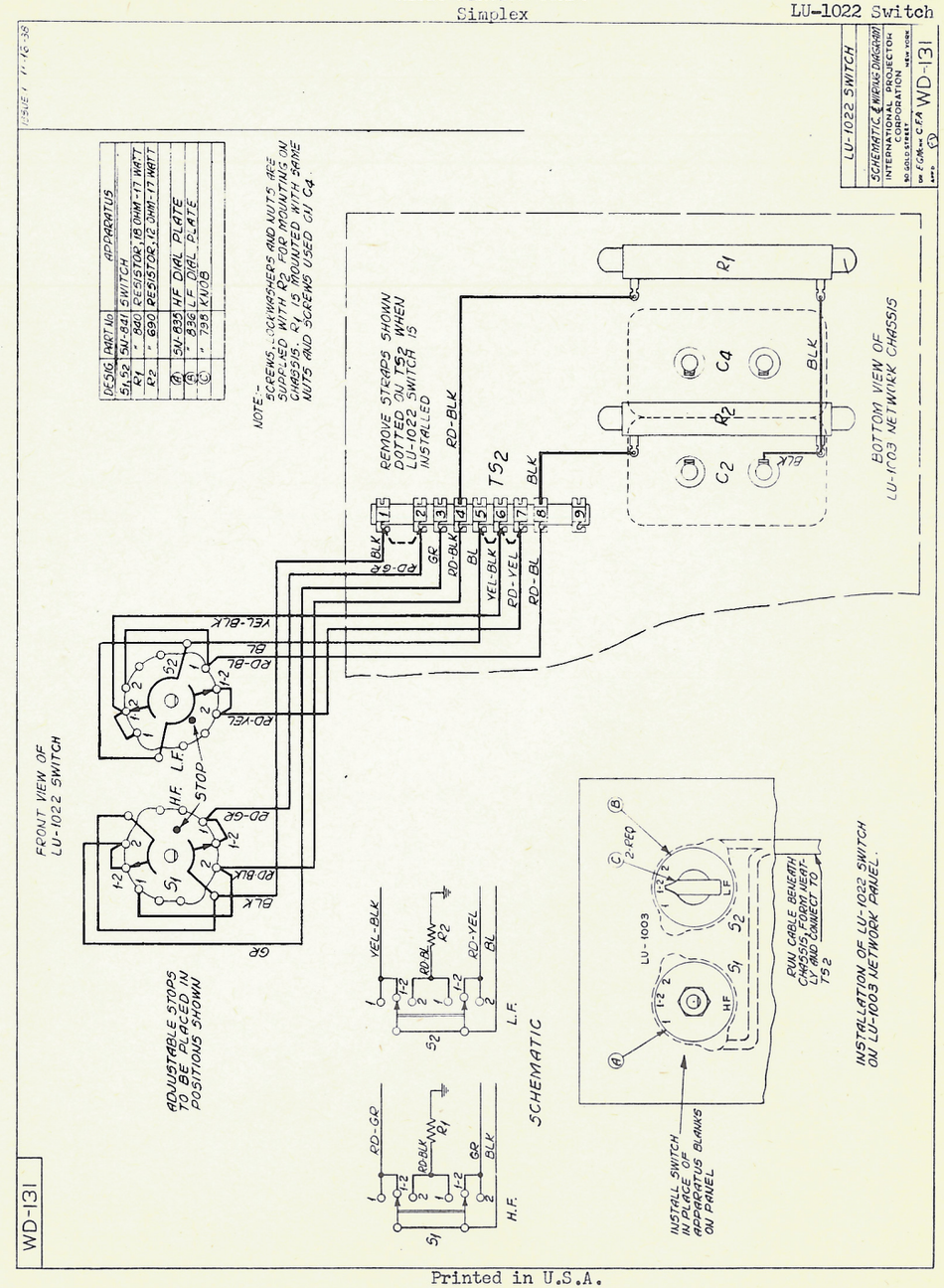
LU-1022 SWITCH
SCHEMATIC & WIRING DIAGRAM
INTERNATIONAL PROJECTOR CORPORATION
WD-131
DESIG. | PART No. | APPARATUS
S1, S2 | SW-841 | SWITCH
R1 | " 840 | RESISTOR, 18 OHM-17 WATT
R2 | " 690 | RESISTOR, 12 OHM-17 WATT
(A) | SW-835 | HF DIAL PLATE
(A) | " 836 | LF DIAL PLATE
(C) | " 798 | KNOB
NOTE:- SCREWS, LOCKWASHERS AND NUTS ARE SUPPLIED WITH R2 FOR MOUNTING ON CHASSIS. R1 IS MOUNTED WITH SAME NUTS AND SCREWS USED ON C4.
REMOVE STRAPS SHOWN DOTTED ON TS2 WHEN LU-1022 SWITCH IS INSTALLED
BOTTOM VIEW OF LU-1003 NETWORK CHASSIS
FRONT VIEW OF LU-1022 SWITCH
ADJUSTABLE STOPS TO BE PLACED IN POSITIONS SHOWN
SCHEMATIC
INSTALL SWITCH IN PLACE OF APPARATUS BLANKS ON PANEL
RUN CABLE BENEATH CHASSIS, FORM NEATLY AND CONNECT TO TS2
INSTALLATION OF LU-1022 SWITCH ON LU-1003 NETWORK PANEL.
WD-131

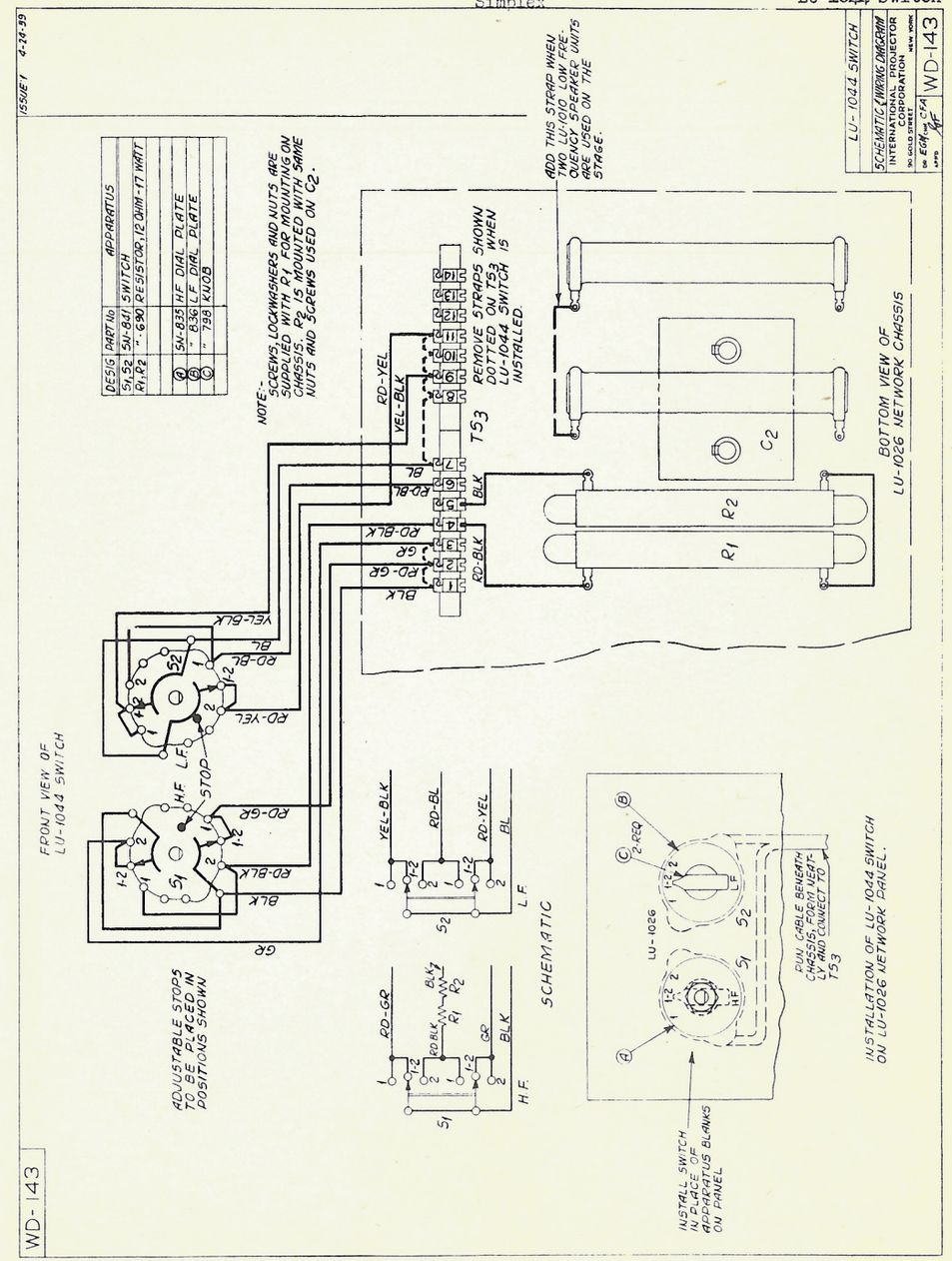
ISSUE 1 4-24-59
LU-1044 SWITCH
SCHEMATIC & WIRING DIAGRAM
INTERNATIONAL PROJECTOR CORPORATION
90 GOLD STREET NEW YORK
WD-143
DESIG | PART No | APPARATUS
S1, S2 | SN-841 | SWITCH
R1, R2 | " -690 | RESISTOR, 12 OHM - 17 WATT
A | SN-835 | HF DIAL PLATE
B | " 836 | LF DIAL PLATE
C | " 798 | KNOB
NOTE:- SCREWS, LOCKWASHERS AND NUTS ARE SUPPLIED WITH R1 FOR MOUNTING ON CHASSIS. R2 IS MOUNTED WITH SAME NUTS AND SCREWS USED ON C2.
ADD THIS STRAP WHEN TWO LU-1010 LOW FREQUENCY SPEAKER UNITS ARE USED ON THE STAGE.
REMOVE STRAPS SHOWN DOTTED ON TS3 WHEN LU-1044 SWITCH IS INSTALLED.
TS3
BOTTOM VIEW OF LU-1026 NETWORK CHASSIS
FRONT VIEW OF LU-1044 SWITCH
ADJUSTABLE STOPS TO BE PLACED IN POSITIONS SHOWN
SCHEMATIC
INSTALLATION OF LU-1044 SWITCH ON LU-1026 NETWORK PANEL.
INSTALL SWITCH IN PLACE OF APPARATUS BLANKS ON PANEL
PUN CABLE BENEATH CHASSIS, FORM NEATLY AND CONNECT TO TS3
WD-143

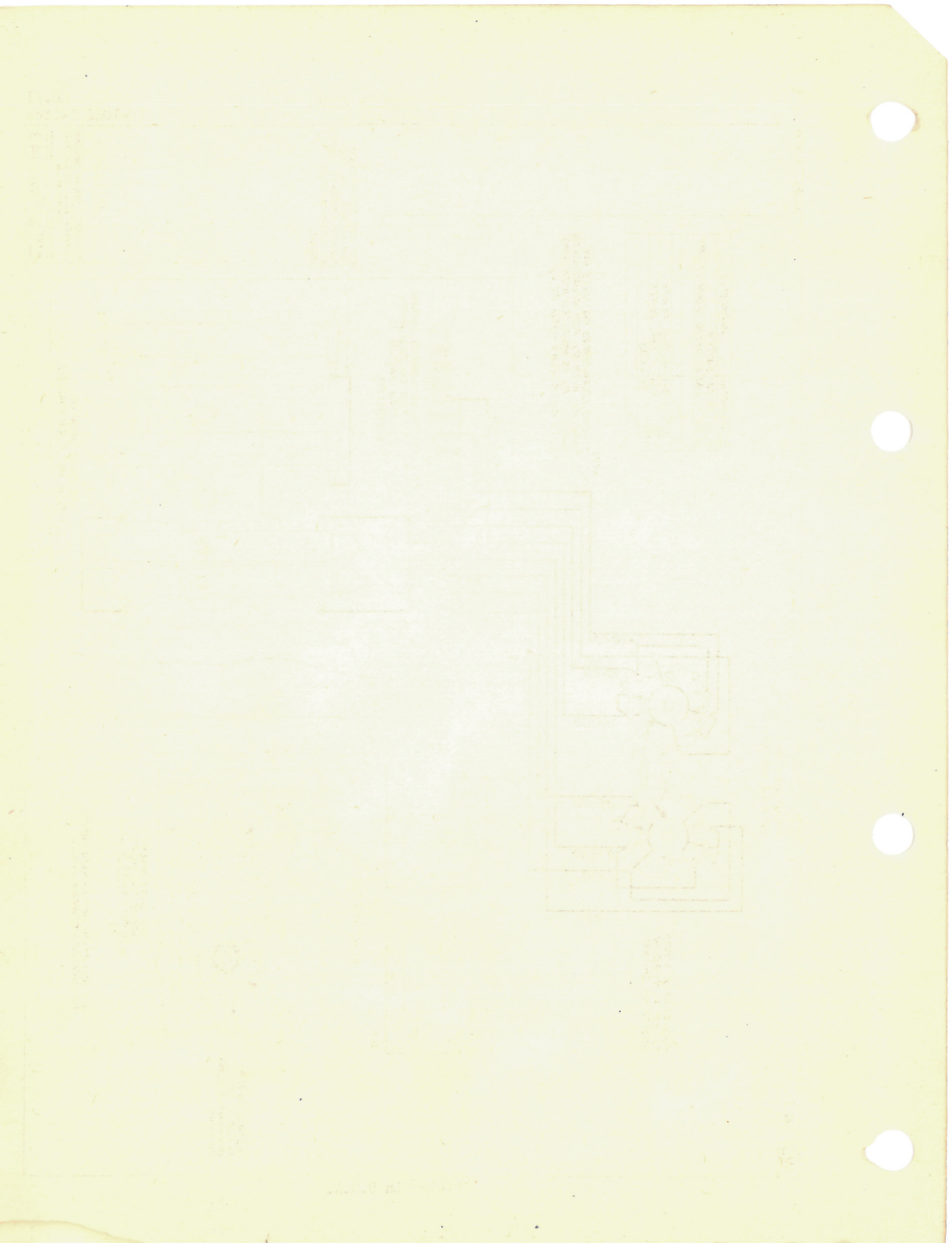

WD-168

ISSUE:-1 1-29-40

DESIG	PART NO	APPARATUS
S_1	SN-841	SWITCH
S_2	SN-1038	SWITCH
R_1	SN-897	RESISTOR 13.5 OHM 17 WATT
R_2	SN-984	RESISTOR 20 OHM 17 WATT
	SN-669	3/8-32 HEX NUT
	SN-798	KNOB
	SN-835	H.F DIAL PLATE
	SN-1061	#1220 SHAKEPROOF LOCK WASH.
	SN-1044	L.F. DIAL PLATE

NOTES:
SCREWS, LOCKWASHERS AND NUTS ARE SUPPLIED WITH R_1 FOR MOUNTING ON CHASSIS. R_2 IS MOUNTED WITH SAME NUTS AND SCREWS USED ON C_2.

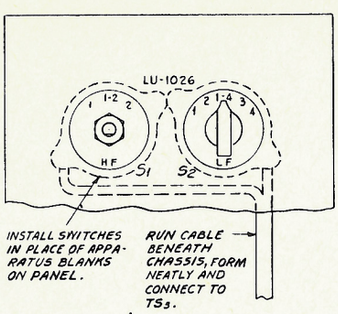

INSTALLATION OF LU-1063 SWITCH ON LU-1026 NETWORK PANEL

FRONT VIEW OF LU-1063 SWITCH

ADJUSTABLE STOPS TO BE PLACED IN POSITIONS SHOWN.

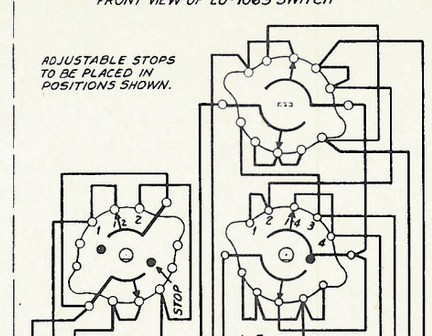

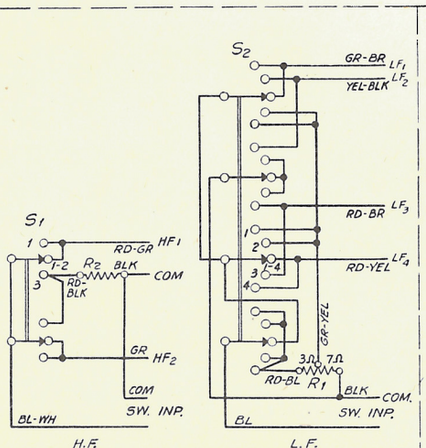

LU-1063 SWITCH SCHEMATIC

FRONT OF CHASSIS

REMOVE ALL STRAPS ON TS3 WHEN LU-1063 SWITCH IS INSTALLED.

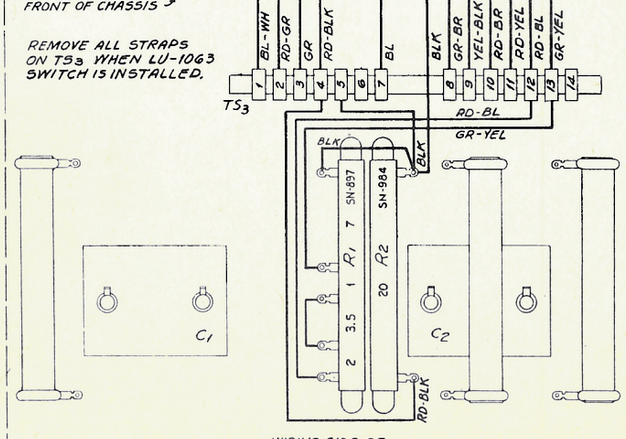

WIRING SIDE OF LU-1026 NETWORK CHASSIS

LU-1063 SWITCH	
SCHEMATIC & WIRING DIAGRAM	
INTERNATIONAL PROJECTOR CORPORATION 90 GOLD STREET NEW YORK	
DR JLSCHK APP'D	WD-168

Printed in U.S.A.

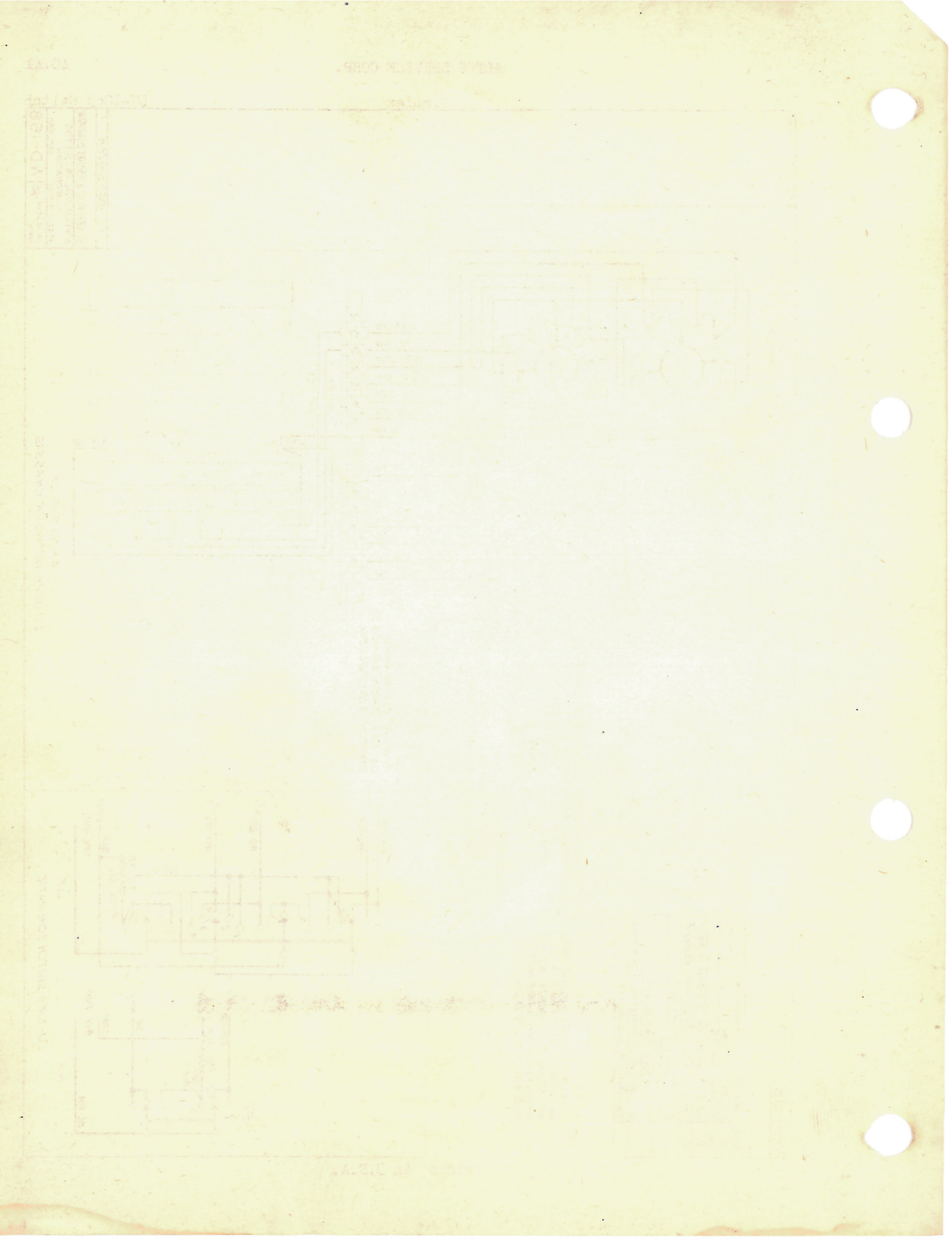

1. DESCRIPTION.

The SN-1087 is a 10 ampere, four-way (double pole, double throw) reversing toggle switch. When mounted in an SN-1088 Outlet Box (4-1/8" high x 2-1/8" wide x 1-7/8" deep) with an SN-1089 cover, it is used as an exciter lamp changeover switch with the PU-1005 Power Unit.

2. INSTALLATION.

One outlet box, switch and cover should be installed on the front wall of the Projection Room, at the right of each projection port, as shown on the system conduit layout. Connections should be made per the system wiring diagram.

3. OPERATION.

Connections to the SN-1087 Switch are made so that changeover may be made at either projector location, regardless of the projector in operation.

Set the switch so that the projector being threaded is inoperative (exciter lamp dim) to prevent disturbances reaching the audience. Changeover is then made, when the incoming machine is up to speed, by operating either switch.

The changeover schematic is shown below. When one projector is in operation (exciter lamp bright), the other exciter lamp is preheated by low voltage current to eliminate thermal lag in the filament and provide instantaneous changeover.

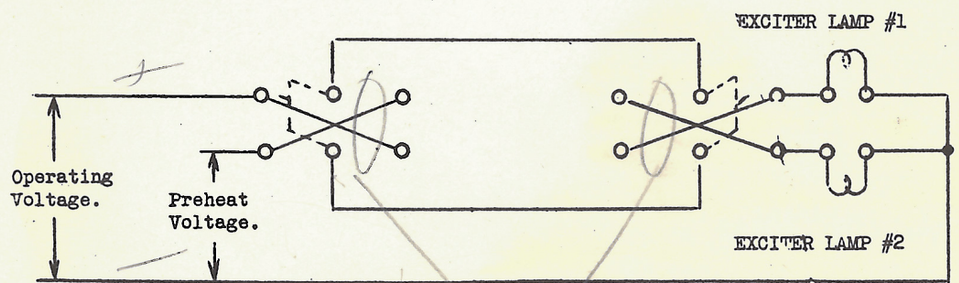

Add this strapping at installation

REDRAWN FROM ISSUE 2 WITH FOLLOWING CHANGES: NOTES: 2 AND 4 ADDED. NOTE 3 WAS NOTE 2. AM-1001 AMPLIFIER ADDED TO TITLE, SIMPLEX SOUND SYSTEMS REMOVED. LIMITS ± 1 DB ADDED IN NOTE 1. IN NOTE 3 WH-BL OR WH-YEL OR AND WH-RD-GR ADDED. WH-YEL OR WH-BL OR, WH-BR OR, WH-RD-GR OR, ADDED TO ALL BL, BR AND RD-GR WIRES RESPECTIVELY. CURVE DATA REVISED. CURVES CHANGED TO AGREE.

CR	FG
ISSUE: 3	7-22-47

HIGH END WARPING CIRCUIT
(SEE NOTE 2)
WIRING DIAGRAM

LOW END WARPING CIRCUIT
(SEE NOTE 2)
WIRING DIAGRAM

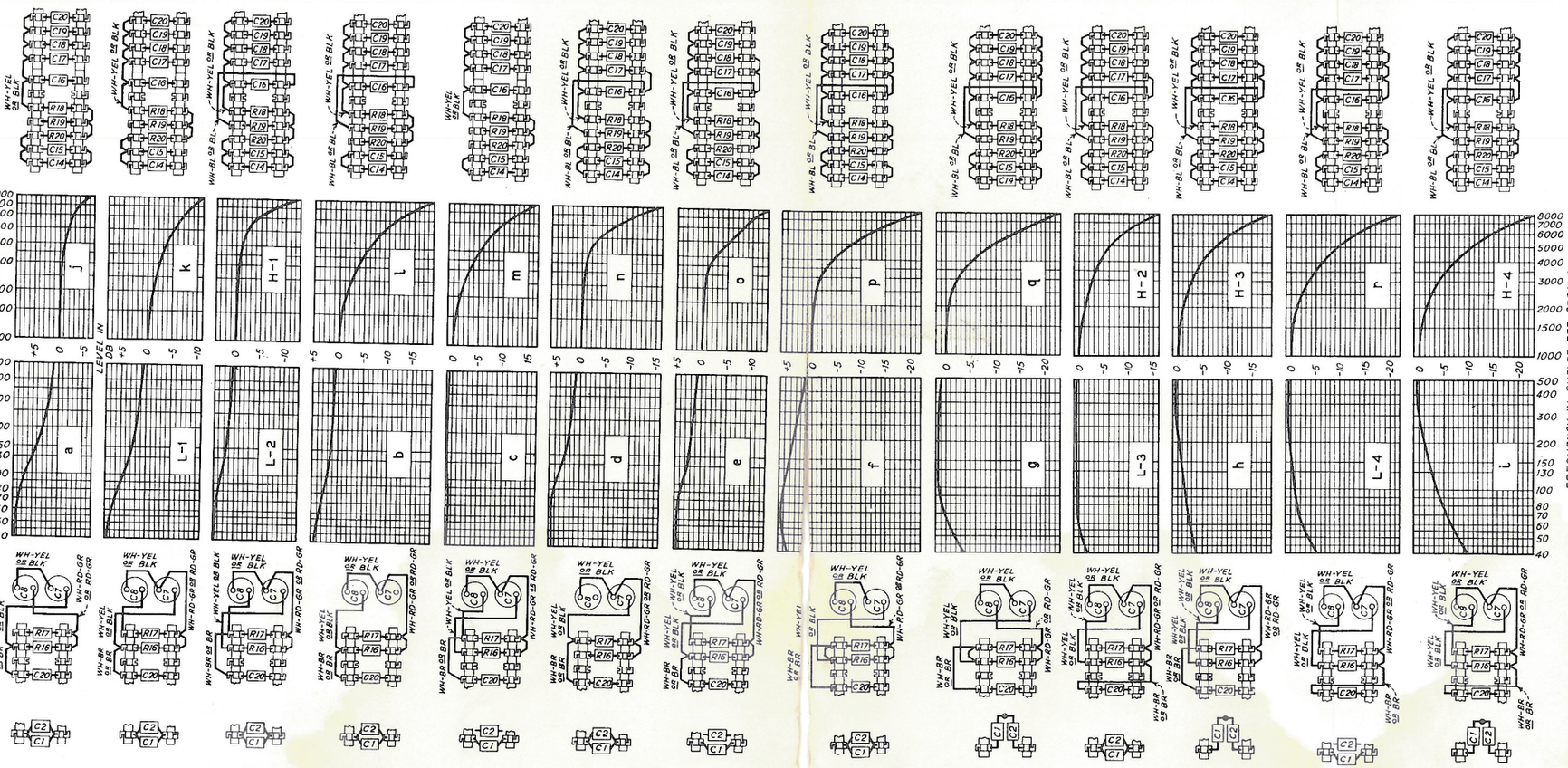

SCHEMATIC

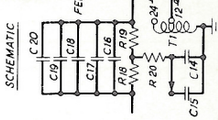

CURVE DATA - CYCLES & DEVIATIONS FROM REFERENCE IN DB

CURVE DESIG.	LOW END 40	70	130	300	500	HIGH END 1000	2000	3000	5000	7000	8000
a	8.6	7.9	3.1	1.9	0.8	0	-0.4	-0.7	-1.9	-4.1	-6.1
L-1	7.7	6.0	1.8	1.3	0.7	0	-0.3	-0.5	-1.1	-3.2	-5.0
L-2	3.9	3.2	1.8	0.8	0.5	0	-0.3	-0.5	-2.2	-8.0	-12.1
b	4.6	3.0	1.3	0.8	0.5	0	-1.5	-3.4	-6.4	-14.9	-16.5
c	5.4	4.5	0.4	0.4	0.6	0	-1.4	-3.1	-7.6	-13.3	-16.5
d	5.4	4.5	2.5	1.2	0.7	0	-1.4	-3.1	-7.6	-13.3	-16.5
e	4.5	4.3	2.5	1.2	0.7	0	-0.3	-0.9	-3.6	-10.0	-13.0
f	4.2	5.5	4.3	2.3	1.0	0	-0.5	-1.8	-8.2	-17.4	-22.0
g	-3.9	-0.2	1.7	1.7	0.9	0	-0.7	-2.3	-9.2	-18.4	-22.9
L-3	-4.0	-2.1	-1.2	0.5	0.3	0	-0.7	-2.5	-9.2	-18.4	-22.9
h	-5.3	-1.8	-0.5	0.5	0.4	0	-1.2	-3.4	-9.3	-17.2	-21.6
L-4	-10.0	-5.5	-2.6	0	0.2	0	-1.2	-3.9	-10.3	-18.5	-22.9
i						FOR ADDITIONAL NO 'EW-633 OR 8' BELDEN # 8401 ADD	0	-0.1	-0.2	-0.4	-0.6	-0.7

SCHEMATIC

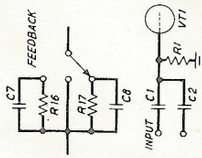

— NOTES —

1. THE FREQUENCY RESPONSE CHARACTERISTIC CURVES SHOWN (LIMITS ± 1DB) ARE OBTAINED BY ADJUSTMENT OF THE WARPING CIRCUIT IN THE AM-1001 AMPLIFIER (SEE DRAWING WD-113). CURVES L-1 TO L-4 AND H-1 TO H-4 ARE STANDARD. OTHER CURVES ARE FOR USE ONLY WHEN UNUSUAL ACOUSTIC CONDITIONS ARE ENCOUNTERED. ANY LOW END CURVE MAY BE ASSOCIATED WITH ANY HIGH END CURVE.

2. THE CURVES INCLUDE SCANNING LOSS, AND WERE OBTAINED USING ED-35 TEST FILM, 6 FEET OF SH-2100 COAXIAL CABLE (CAPACITY 8 MMF PER FOOT), AM-101 TYPE VOLUME CONTROL AMPLIFIER AND 15 FEET BELDEN # 8401 MICROPHONE CABLE, CAPACITY 26 MMF PER FOOT, (20 FEET EW-633 PLASTIC MICROPHONE CABLE OPTIONAL).

3. THE FIGURE, ASSOCIATED WITH EACH CURVE, SHOWS THE WARPING CIRCUIT STRAPPING REQUIRED TO OBTAIN THE CURVE. RECONNECT STRAPS, AS NECESSARY, AND REMOVE OTHER EXISTING STRAPS NOT SHOWN IN THE FIGURE. THE WH-BL OR BL AND WH-YEL OR BLK WIRES FROM T1 AND THE WH-RD-GR OR RD-GR WIRE FROM TS1 SHOULD REMAIN CONNECTED TO R19, C14 AND R16 RESPECTIVELY AS SHOWN ON DRAWING WD-113.

4. THE AMPLIFIER IS SHIPPED STRAPPED FOR THE L-2, H-2 CURVE.

AM-1001 AMPLIFIER
FREQUENCY RESPONSE
CHARACTERISTICS

INTERNATIONAL PROJECTOR CORPORATION
55 LA FRANCE AVENUE
BLOOMFIELD NEW JERSEY

DR. CH'K CFA APP'D. F.

SC-21

Printed in U.S.A.

SC-43

ISSUE:1 4-17-39
NOTE 1 REVISED
NOTE 3 ADDED
BY E.G.M. and Peer
ISSUE:2 8-31-39

LOW END WARPING CIRCUIT (AM-142 AMPLIFIER EQUIPMENT) WIRING DIAGRAM

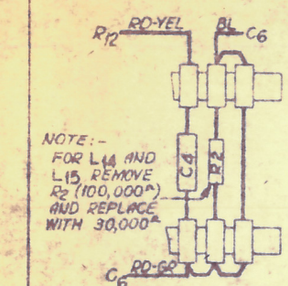

NOTE:- FOR L14 AND L15 REMOVE R_2 (100,000Ω) AND REPLACE WITH 30,000Ω

LOW END CURVE DATA
CYCLES & DEVIATIONS FROM REFERENCE IN DB

CURVE DESIG	55	70	100	200	300	500	700
L-10	+6.5	+4.5	+3.5	+2.3	+1.4	+0.5	+0.2
L-14	+3.5	+3.4	+2.8	+2.0	+1.8	+0.5	+0.2
L-12	-1.7	-0.8	-0.2	+0.5	+0.5	+0.5	+0.2

HIGH END CURVE DATA
CYCLES & DEVIATIONS FROM REFERENCE IN DB

CURVE DESIG	1000	2000	3000	5000	7000	8000
H-10	0	-0.4	-0.6	-2.8	-5.5	-7.8
H-11	0	-0.6	-1.5	-4.8	-7.9	-11.0
H-12	0	-0.7	-2.1	-6.7	-11.0	-14.5
H-13	0	-1.5	-3.6	-8.5	-14.0	-16.5

CYCLES PER SECOND

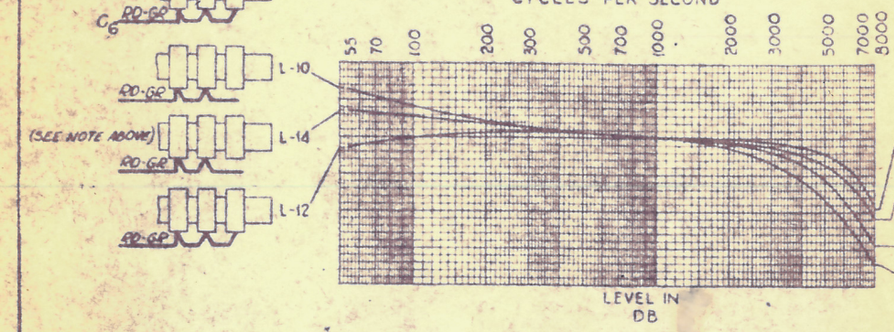

HIGH END WARPING CIRCUIT (AM-142 AMPLIFIER EQUIPMENT) WIRING DIAGRAM

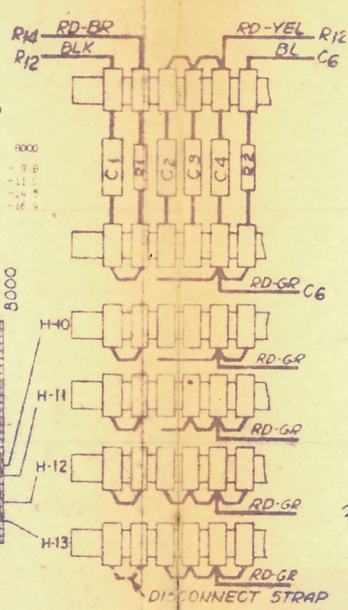

NOTES:

1. THE FREQUENCY RESPONSE CHARACTERISTICS SHOWN (LIMITS ± 1 DB) ARE OBTAINED BY ADJUSTMENT OF THE AM-142 AMPLIFIER EQUIPMENT WARPING CIRCUIT (SEE DRAWING NO-159) AND BY HIGH FREQUENCY EQUALIZATION ADJUSTMENTS IN THE AM-141 VOLUME CONTROL AMPLIFIER (SEE DRAWING NO-158) THE HIGH FREQUENCY EQUALIZATION IS "IN" FOR THE UPPER SET OF CURVES AND "OUT" FOR THE LOWER SET. THE CURVES INCLUDE SCANNING LOSS AND WERE OBTAINED USING TEST FILM, 137-44" SM-1101 COAXIAL CABLE (CAPACITY 40 MMF PER FOOT) AND 50' #8401 BELDEN MICROPHONE CABLE (CAPACITY 26 MMF PER FOOT).

2. THE FIGURE, ASSOCIATED WITH EACH CURVE, SHOWS THE STRAPPING REQUIRED TO OBTAIN THE CURVE IN THE WARPING CIRCUIT ONLY THE STRAPS ON THE LOWER ROW OF TERMINALS ARE CHANGED. RECONNECT OR REMOVE STRAPS AS INDICATED IN THE FIGURE. THE BLACK, RED-BROWN, RED-YELLOW, BLUE AND RED-GREEN WIRES SHOULD REMAIN CONNECTED AS SHOWN.

3. THE AMPLIFIER IS SHIPPED STRAPPED FOR THE L-11, H-14 CURVE.

HIGH FREQUENCY EQUALIZATION AM-141 VOLUME CONTROL AMPLIFIER WIRING DIAGRAM

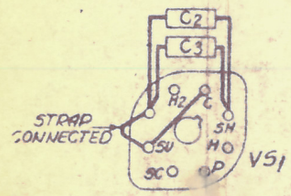

LEVEL IN DB

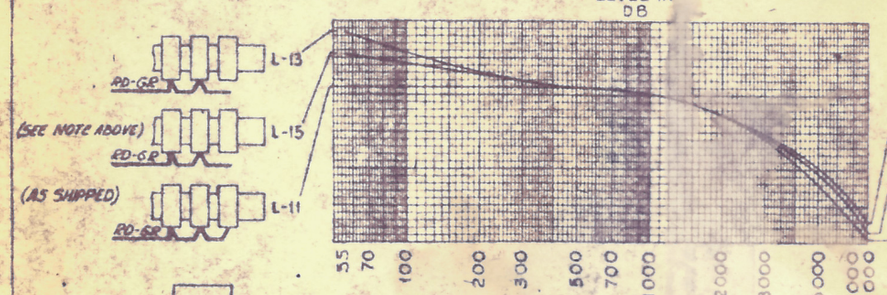

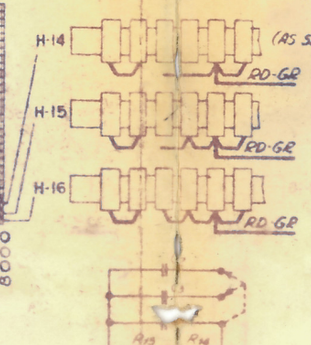

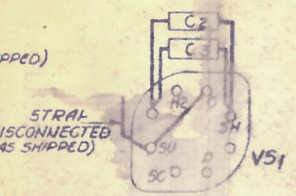

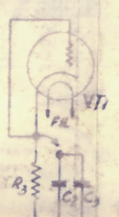

LOW END CURVE DATA
CYCLES & DEVIATIONS FROM REFERENCE IN DB

CURVE DESIG	55	70	100	200	300	500	700
L-13	+8.5	+7.2	+5.8	+3.2	+2.0	+1.0	+0.8
L-15	+5.5	+5.0	+4.2	+2.8	+2.0	+1.0	+0.8
L-11	+1.0	+1.0	+1.0	+1.0	+1.0	+1.0	+0.8

HIGH END CURVE DATA
CYCLES & DEVIATIONS FROM REFERENCE IN DB

CURVE DESIG	1000	2000	3000	5000	7000	8000
H-14	0	-2.7	-5.3	-9.8	-14.3	-17.3
H-15	0	-2.7	-5.5	-11.5	-15.8	-19.0
H-16	0	-3.0	-6.2	-12.5	-17.5	-19.8

ASSOCIATED ITEMS
FREQUENCY RESPONSE CHARACTERISTICS WITH AM-141 VOL. CONT. AMPL. & AM-142 AMPLIFIER EQUIPMENT

INTERNATIONAL PROJECTOR CORPORATION
30 GOLD STREET NEW YORK

DR EGM CHD CPR APPD Peer. SC-43

SC-46

ISSUE:1 6-23-39

LOW END WARPING CIRCUIT (AM-145 PRE-AMPLIFIER EQUIPMENT) WIRING DIAGRAM

NOTE
FOR L-24 AND L-25 REMOVE C_1 (.005 MF) AND REPLACE WITH .0025 MF AND .001 MF RESPECTIVELY.

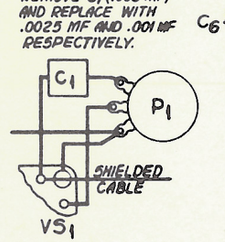

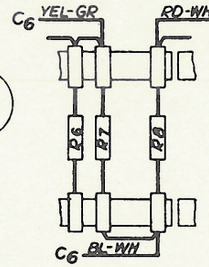

LOW END CURVE DATA
CYCLES & DEVIATIONS FROM REFERENCE IN DB

CURVE DESIG	55	70	100	130	300	500
L-20	6.7	5.1	3.3	2.6	0.9	0.2
L-21	4.4	3.8	2.8	2.2	0.9	0.2
L-22	2.2	2.1	2.0	1.7	0.9	0.2
L-23	-0.7	-0.2	0	0.1	0	0
L-24	-2.3	-1.6	-0.9	-0.5	0	0
L-25	-8.0	-6.5	-4.7	-3.4	-0.8	-0.2

HIGH END CURVE DATA
CYCLES & DEVIATIONS FROM REFERENCE IN DB

CURVE DESIG	1000	2000	2500	3000	3500	4000	5000	6000	7000	8000
H-20	0	0	0	0	0	0.1	0.2	0.7	0.4	0
H-21	0	-0.2	-0.5	-0.7	-0.8	-0.8	-1.0	-1.3	-1.8	-2.7
H-22	0	-0.2	-0.5	-0.7	-1.0	-1.2	-2.1	-3.0	-4.1	-5.2
H-23	0	-0.9	-1.2	-1.9	-2.1	-2.6	-3.6	4.3	-5.8	-8.2
H-24	0	-1.2	-2.1	-3.0	-3.8	-4.5	-6.0	7.8	-9.6	-11.8
H-25	0	-1.8	-2.9	-4.1	-5.3	-6.7	-9.2	-11.3	-13.8	-16.7

HIGH END WARPING CIRCUIT (AM-145 PRE-AMPLIFIER EQUIPMENT) WIRING DIAGRAM

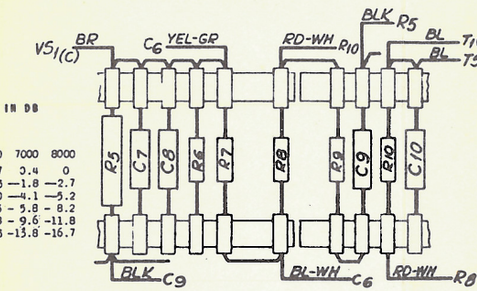

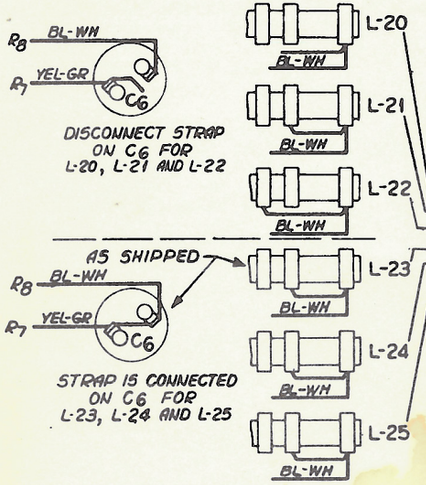

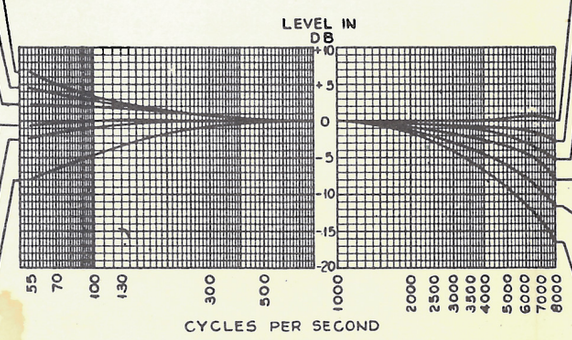

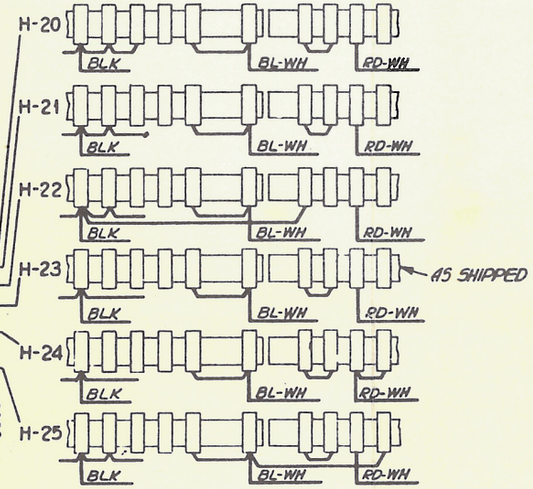

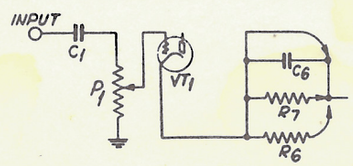

NOTES:

1. THE FREQUENCY RESPONSE CHARACTERISTICS SHOWN(LIMITS ±1db) ARE OBTAINED BY ADJUSTMENTS OF THE AM-145 PRE-AMPLIFIER EQUIPMENT WARPING CIRCUIT (SEE DRAWING WD-160). .THEY INCLUDE SCANNING LOSS AND WERE OBTAINED USING TEST FILM AND 6 FEET OF SH-2100 COAXIAL CABLE (CAPACITY 8 MMF PER FOOT).

2. THE FIGURE, ASSOCIATED WITH EACH CURVE, SHOWS THE STRAPPING REQUIRED TO OBTAIN THE CURVE, IN THE WARPING CIRCUIT ONLY THE STRAPS ON THE LOWER ROW OF TERMINALS ARE CHANGED. RECONNECT OR REMOVE STRAPS AS INDICATED IN THE FIGURE. THE COLOR CODED CABLE FORM WIRES SHOULD REMAIN CONNECTED AS SHOWN.

3. THE AMPLIFIER IS SHIPPED STRAPPED FOR THE L_{23}, H_{23} CURVE.

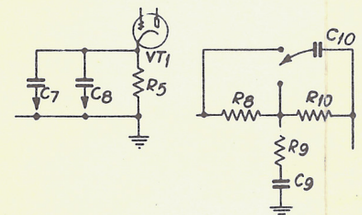

FREQUENCY RESPONSE CHARACTERISTICS WITH AM-145 PRE-AMPLIFIER EQUIP.
INTERNATIONAL PROJECTOR CORPORATION
90 GOLD STREET NEW YORK
DR. E.G.M. CHK'D APP'D
SC-46

X-L SOUND SYSTEMS
VOLTAGE AND CURRENT TEST DATA

Vacuum Tube	Pin #1	Pin #2	Pin #3	Pin #4	Pin #5	Pin #6	Pin #7	Pin #8	Tube Cap	Other Voltage Data / Total Plate Current
AM-1026 AMPLIFIER (See Notes: 1 and 2)										
V1 (6SL7GT)	G2 50	P2 205	K2 90	G1 0	P1 90	K1 0.6	H 3AC	H 3AC	-	Junction R32 and L1 590 V
V2 (6SL7GT)	G2 50	P2 205	K2 90	G1 0	P1 90	K1 0.6	H 3AC	H 3AC	-	Junction R25 and C7 -150 V
V3 (6SN7GTA)	G2 -10	P2 300	K2 -30	G1 -10	P1 300	K1 -30	H 3AC	H 3AC	-	Junction R25 and C6 -185 V
V4 (#807)	H 3AC	G2 300	G1 -30	K 0.2	H 3AC	-	-	-	585	
V5 (#807)	H 3AC	G2 300	G1 -30	K 0.2	H 3AC	-	-	-	585	Total Plate Current 140 MA
V6 (VR-150)	-	K 0	-	-	P 150	-	-	-	-	(See Note: 5)
V7 (VR-150)	-	K 150	-	-	P 300	-	-	-	-	
V8 (5R4GY)	-	F 560	-	P2 720AC	-	P1 720AC	-	F 600	-	
V9 (5R4GY)	-	F 560	-	P2 720AC	-	P1 720AC	-	F 600	-	
AM-1027 AMPLIFIER (See Notes: 1 and 2)										
V1 (6SL7GT)	G2 0	P2 155	K2 0.9	G1 0	P1 155	K1 0.9	H 3AC	H 3AC	-	Junction L1 and C10 385 V
V2 (6SL7GT)	G2 -10	P2 300	K2 -25	G1 -10	P1 300	K1 -25	H 3AC	H 3AC	-	Junction R25 and C7 -165 V
V3 (6L6G)	-	H 3AC	P 370	G2 300	G1 -25	-	H 3AC	K 0.3	-	Junction R25 and C6 -165 V
V4 (6L6G)	-	H 3AC	P 370	G2 300	G1 -25	-	H 3AC	K 0.3	-	Total Plate Current 170 MA
V5 (5R4GY)	-	F 380	-	P2 490AC	-	P1 490AC	-	F 385	-	(See Note: 5)
AM-1028 PEC AMPLIFIER (See Notes 1 and 3)										
V1 (6J7)	SH 0	H 3AC	P 52	G2 25	G3 0.9	-	H 3AC	K 0.9	-	Total Plate Current 4 MA
V2 (6J7)	SH 0	H 3AC	P 160	G2 160	G3 160	-	H 3AC	K 16	-	(See Note: 6)
P1 (Connector)	3AC	65	0	0	0	3AC	285	0	-	
AM-1029 MONITOR AMPLIFIER (See Notes: 1 and 2)										
V1 (6SL7GT)	G2 0	P2 110	K2 0.8	G1 0	P1 110	K1 0.8	H 3AC	H 3AC	-	Total Plate Current 55 MA
V2 (6L6G)	-	H 3AC	P 300	G2 260	G1 0	-	H 3AC	K 18	-	(See Note: 7)
V3 (5Y3GT)	-	F 335	-	P2 310AC	-	P1 310AC	-	F 340	-	

NOTES

1. All voltages are:-
   a. DC unless otherwise specified.
   b. To system ground.
   c. Taken with a 1000 ohm/volt voltmeter.
   d. With a 115 volt, 60 cycle AC power supply.
   e. With no signal.
2. The AM-1026, AM-1027 and AM-1029 Amplifier data were obtained without load.
3. The AM-1028 PEC Amplifier plate and heater supply are obtained from the AM-1026 or AM-1027 Amplifier.
4. The PU-1009 and PU-1010 Power Unit data were obtained with 4 amperes flowing to each of two exciter lamps.
5. Disconnect B1 wire from L1 and insert 0-250 MA DC meter.
6. Disconnect wire from B+ terminal on Soundhead and insert 0-10 MA DC meter.
7. Disconnect strap from V3, Pin #8 and insert 0-100 MA DC meter.

PU-1009, PU-1010 Power Unit (See Notes: 1 and 4)	
Junction CR1 and L1	14. V DC
Junction L1 and L2	12.5 V DC
Junction L2 and C2	11.0 V DC
T1 SS	17.5 V AC

Amplifier Code	Impedance-Ohms Input	Output
AM-1026	500	8,16,32
AM-1027	500	8,16
AM-1028	PEC	500
AM-1029	0.5 MEG	4, 8,15

ALTEC SERVICE CORPORATION
SIMPLEX
XL SOUND SYSTEMS
SOUND EQUIPMENT BULLETIN

COMPONENT	PRIMARY		SECONDARY	
	TERMINALS	OHMS	TERMINALS	OHMS
AM-1026 AMPLIFIER				
T1 (Input)	P-P	22	S-S	2230
T2 (Output)	P-P	156	0-8 0-16 0-32	0.8 1.1 1.5
T3 (Power)	C-125	1.1	5-5 6.3-6.3 HV-HV CT-BT	0.1 0.1 145 14
L1	-	60	-	-
AM-1027 AMPLIFIER				
T1 (Input)	P-P	22	S-S	2230
T2 (Output)	P-P	246	0-8 0-16	1. 1.3
T3 (Power)	C-125	2.2	5-5 6.3-6.3 HV-HV CT-BT	0.1 0.1 175 21
L1	-	100	-	-
AM-1028 PRE-AMPLIFIER				
T1 (Output)	P-P	1400	S-S	25
AM-1029 MONITOR AMPLIFIER				
T1 (Output)	P-P	440	0-4 0-8 0-16	0.6 0.8 1.1
T2 (Power)	0-125	7.3	5-5 6.3-6.3 HV-HV	[illegible] 360
PU-1009, PU-1010 POWER UNIT				
T1 (Power) L1 and L2	P-P -	1.1 0.2 Max.	S-S -	0.2 -

NOTES

1. All resistance measurements are to be made with all vacuum tubes removed and the cable form wires disconnected from the associated terminal strip.

INTERNATIONAL PROJECTOR CORPORATION
BLOOMFIELD, N. J.

X-L SOUND SYSTEMS
VOLTAGE AND CURRENT TEST DATA

Vacuum Tube	Pin #1	Pin #2	Pin #3	Pin #4	Pin #5	Pin #6	Pin #7	Pin #8	Tube Cap	Other Voltage Data Total Plate Current
AM-1026 AMPLIFIER (See Notes: 1 and 2)										
V1 (6SL7GT)	G2 50	P2 205	K2 90	G1 0	P1 90	K1 0.6	H 3AC	H 3AC	-	Junction R32 and L1 590 V
V2 (6SL7GT)	G2 50	P2 205	K2 90	G1 0	P1 90	K1 0.6	H 3AC	H 3AC	-	Junction R25 and C7 -150 V
V3 (6SN7GTA)	G2 -10	P2 300	K2 -30	G1 -10	P1 300	K1 -30	H 3AC	H 3AC	-	Junction R25 and C6 -185 V
V4 (#807)	H 3AC	G2 300	G1 -30	K 0.2	H 3AC	-	-	-	585	
V5 (#807)	H 3AC	G2 300	G1 -30	K 0.2	H 3AC	-	-	-	585	Total Plate Current 140 MA
V6 (VR-150)	-	K 0	-	-	P 150	-	-	-	-	(See Note: 5)
V7 (VR-150)	-	K 150	-	-	P 300	-	-	-	-	
V8 (5R4GY)	-	F 560	-	P2 720AC	-	P1 720AC	-	F 600	-	
V9 (5R4GY)	-	F 560	-	P2 720AC	-	P1 720AC	-	F 600	-	
AM-1027 AMPLIFIER (See Notes: 1 and 2)										
V1 (6SL7GT)	G2 0	P2 155	K2 0.9	G1 0	P1 155	K1 0.9	H 3AC	H 3AC	-	Junction L1 and C10 385 V
V2 (6SL7GT)	G2 -10	P2 300	K2 -25	G1 -10	P1 300	K1 -25	H 3AC	H 3AC	-	Junction R25 and C7 -165 V
V3 (6L6G)	-	H 3AC	P 370	G2 300	G1 -25	-	H 3AC	K 0.3	-	Junction R25 and C6 -165 V
V4 (6L6G)	-	H 3AC	P 370	G2 300	G1 -25	-	H 3AC	K 0.3	-	Total Plate Current 170 MA
V5 (5R4GY)	-	F 380	-	P2 490AC	-	P1 490AC	-	F 385	-	(See Note: 5)
AM-1028 PEC AMPLIFIER (See Notes 1 and 3)										
V1 (6J7)	SH 0	H 3AC	P 52	G2 25	G3 0.9	-	H 3AC	K 0.9	-	Total Plate Current 4 MA
V2 (6J7)	SH 0	H 3AC	P 160	G2 160	G3 160	-	H 3AC	K 16	-	(See Note: 6)
P1 (Connector)	3AC	65	0	0	0	3AC	285	0	-	
AM-1029 MONITOR AMPLIFIER (See Notes: 1 and 2)										
V1 (6SL7GT)	G2 0	P2 110	K2 0.8	G1 0	P1 110	K1 0.8	H 3AC	H 3AC	-	Total Plate Current 55 MA
V2 (6L6G)	-	H 3AC	P 300	G2 260	G1 0	-	H 3AC	K 18	-	(See Note: 7)
V3 (5Y3GT)	-	F 335	-	P2 310AC	-	P1 310AC	-	F 340	-	

PU-1009, PU-1010 Power Unit (See Notes: 1 and 4)	
Junction CR1 and L1	14. V DC
Junction L1 and L2	12.5 V DC
Junction L2 and C2	11.0 V DC
T1 SS	17.5 V AC

Amplifier Code	Impedance-Ohms Input	Output
AM-1026	500	8,16,32
AM-1027	500	8,16
AM-1028	PEC	500
AM-1029	0.5 MEG	4, 8,15

NOTES

1. All voltages are:-
   a. DC unless otherwise specified.
   b. To system ground.
   c. Taken with a 1000 ohm/volt voltmeter.
   d. With a 115 volt, 60 cycle AC power supply.
   e. With no signal.
2. The AM-1026, AM-1027 and AM-1029 Amplifier data were obtained without load.
3. The AM-1028 PEC Amplifier plate and heater supply are obtained from the AM-1026 or AM-1027 Amplifier.
4. The PU-1009 and PU-1010 Power Unit data were obtained with 4 amperes flowing to each of two exciter lamps.
5. Disconnect B1 wire from L1 and insert 0-250 MA DC meter.
6. Disconnect wire from B+ terminal on Soundhead and insert 0-10 MA DC meter.
7. Disconnect strap from V3, Pin #8 and insert 0-100 MA DC meter.

INTERNATIONAL PROJECTOR CORPORATION
BLOOMFIELD, N. J.

Printed in U.S.A.
5-51
Issue #2

ALTEC SERVICE CORPORATION
SIMPLEX
XL SOUND SYSTEMS
SOUND EQUIPMENT BULLETIN

COMPONENT	PRIMARY		SECONDARY	
	TERMINALS	OHMS	TERMINALS	OHMS
AM-1026 AMPLIFIER				
T1 (Input)	P-P	22	S-S	2230
T2 (Output)	P-P	156	0-8 0-16 0-32	0.8 1.1 1.5
T3 (Power)	C-125	1.1	5-5 6.3-6.3 HV-HV CT-BT	0.1 0.1 145 14
L1	-	60	-	-
AM-1027 AMPLIFIER				
T1 (Input)	P-P	22	S-S	2230
T2 (Output)	P-P	246	0-8 0-16	1. 1.3
T3 (Power)	C-125	2.2	5-5 6.3-6.3 HV-HV CT-BT	0.1 0.1 175 21
L1	-	100	-	-
AM-1028 PRE-AMPLIFIER				
T1 (Output)	P-P	1400	S-S	25
AM-1029 MONITOR AMPLIFIER				
T1 (Output)	P-P	440	0-4 0-8 0-16	0.6 0.8 1.1
T2 (Power)	0-125	7.3	5-5 6.3-6.3 HV-HV	[illegible] 360
PU-1009, PU-1010 POWER UNIT				
T1 (Power) L1 and L2	P-P -	1.1 0.2 Max.	S-S -	0.2 -

NOTES

1. All resistance measurements are to be made with all vacuum tubes removed and the cable form wires disconnected from the associated terminal strip.

INTERNATIONAL PROJECTOR CORPORATION
BLOOMFIELD, N. J.