The radio amateur's handbook

Twenty-First Edition 1944

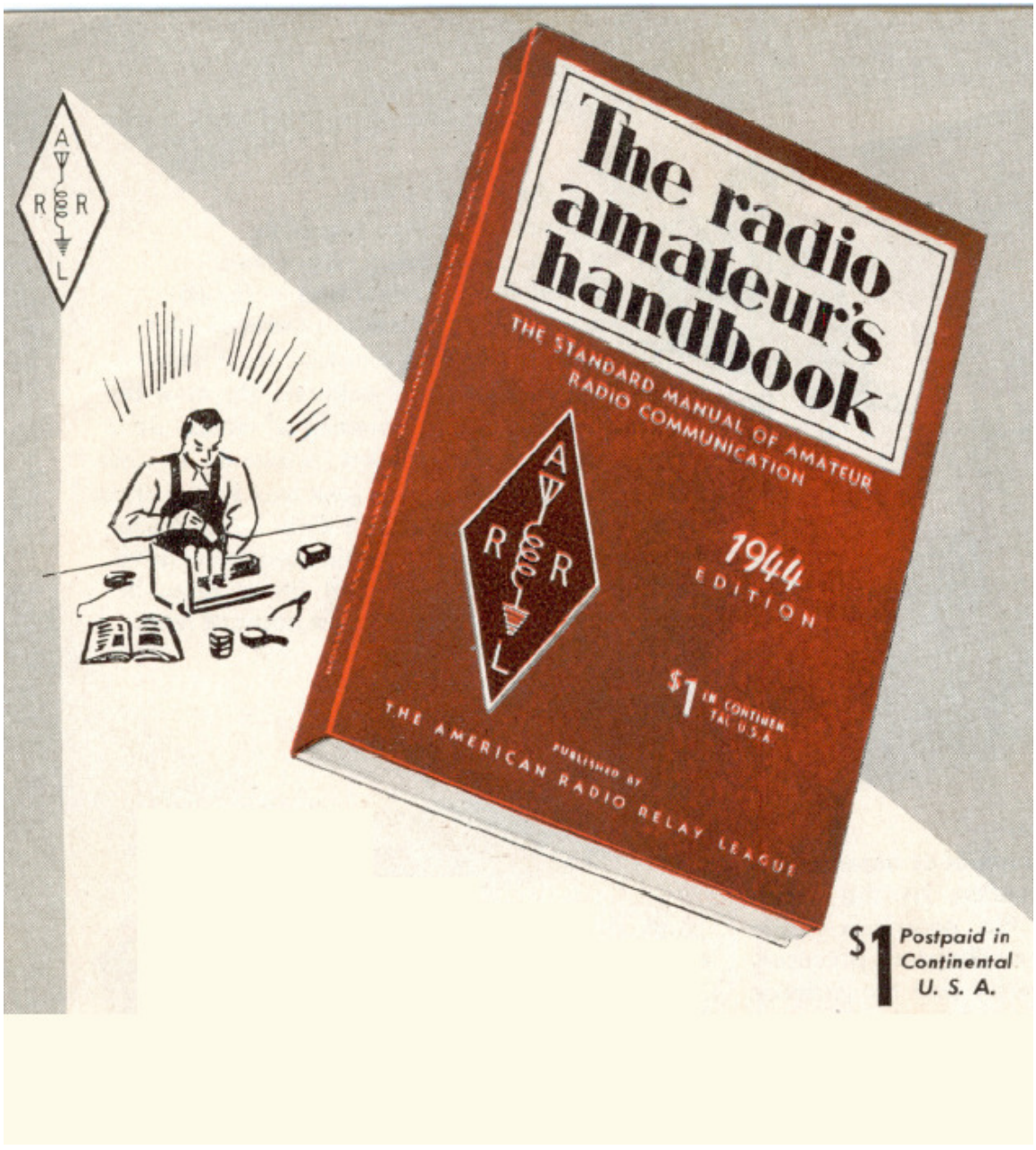

Document notes:

1. The cover was missing from the old volume. It was scanned because it was falling apart.

2. This page replaces the backside of the cover to make the page numbers correct.

3. The CONSTRUCTION AND DATA section was scanned at 300DPI.

4. The other material was scanned at 200DPI.

5. If the advertisers section was included in this version of the file, it was scanned at 300DPI in color.

6. The index at the back of the volume was missing from original and is missing from this file.

7. The copyright expired long ago on this book.

8. Feel free to improve the document.

9. This file is available free on the internet and carries a money-back guarantee of your full satisfaction on that price!

KD50EI

TWENTY-FIRST EDITION

NINETEEN FORTY-FOUR

THE RADIO AMATEUR'S HANDBOOK



BY THE HEADQUARTERS STAFF OF THE
AMERICAN RADIO RELAY LEAGUE

PUBLISHED BY THE AMERICAN RADIO RELAY LEAGUE,
INCORPORATED, WEST HARTFORD, CONNECTICUT

COPYRIGHT 1943 BY

THE AMERICAN RADIO RELAY LEAGUE, INC.

Copyright secured under the Pan-American Convention

This work is Publication No. 6 of The Radio Amateur's Library, published by the League. All rights reserved. No part of this work may be reproduced in any form except by written permission of the publisher. All rights of translation are reserved. Printed in U. S. A.

Twenty-first Edition, First Printing, November, 1943
90,000 copies

(Of the previous twenty editions, 1,033,250 copies were published in forty printings.)

THE RUMFORD PRESS
CONCORD, NEW HAMPSHIRE

Foreword

THE *Radio Amateur's Handbook* has had a remarkable history. Back in 1926 we of the headquarters staff of the radio amateur's organization, the American Radio Relay League, set about the writing of a small pamphlet of operating instructions intended to improve the performance of amateur stations. When it was finished we found that, with the necessary additional material on technical topics, we had written a considerable-size book. Upon its publication it enjoyed an instant success and quickly became an important factor in the literature of the radio amateur. As successive reprintings were undertaken new material was added, and an evolutionary process began which became the policy of the *Handbook:* to present the kind of information required to get *results*, rather than the academic intricacies of the classroom, and to refine and perfect the explanations so that they were thoroughly helpful to practical amateurs. Thus the book grew through the years — in size, in value, in acceptance. It became the right-hand guide of practical radio amateurs in every country of the globe. As war came on, it was inevitable that a book written as the *Handbook* was written would be found to provide exactly the kind of information required to make practical radiomen for the military services and to help those who were training themselves for wartime radio work. This book certainly has: not only is it used directly in many training programs, either as basic text or reference, but its information has provided source-data for many of the service-written special courses.

With the *Handbook* thus doing a wartime job, with its total distribution now well over a million copies, we have had a heavy sense of our responsibilities as writers and publishers as we approached the present revision: the twenty-first edition, the forty-first printing. Our editorial problem in this annual revising has always lain largely in so adjusting its scope and perspective that the book would be of maximum usefulness to the reader in his problems and activities of that particular year. In the happier pre-war days of active amateur operation that task was chiefly one of selecting the ideas and creating the apparatus designs upon which the greatest operating reliance could be placed, the latest and best "construction" information of which we had knowledge. To-day, with amateur stations silenced and all our people geared to the needs of war, the perspective necessarily shifts sharply. The world to-day puts a premium upon *knowledge* of radio. The amateur studies his art to improve his proficiency in his present wartime job as well as for the day when his station re-opens. Hundreds of thousands of additional men and women are being trained to useful proficiency in the radio field, to meet the nation's needs — a job in which the *Handbook* is proving a potent aid. We believe, then, that we best serve our readers this year by putting more emphasis on the "how-it-works" part of the book than on the "how-to-make-it"— although both are indispensable.

In this new edition we are using an enlarged page format which, despite wartime paper restrictions, happily permits us to make this by far the largest edition yet published, in point of editorial content. This edition is divided into two main parts. In the first is grouped all the material treating of principles, theory and design considerations — the enduring basis of the art. In the second part, embodying the best current practical employment of the basic knowledge of the first part, are the examples of practical equipment — in general with at least one representative example of each accepted type or combination — together with essential constructional data and instructions for adjustment and use. Mention should be made of the new chapter on carrier-current communication, the alternative field which the amateur has found most interesting and fruitful during the war's restrictions. The chapter on the War Emergency Radio Service has been re-written and considerably expanded to provide the best possible guidance to those engaged in this essential service. The classified tube tables, always an important feature of the *Handbook*, have been revised to include data on all released types, and remain the most comprehensive

compilation available. A new convenience, to facilitate locating a tube whose classification is not known, is a cross-index by type numbers.

The first main part of this book, Chapters Two to Ten, inclusive, constitute a textbook on the theory of radio. The present treatment represents a considerable expansion over previous editions, with new material and amplified information added where practical teaching experience using the *Handbook* as a text has disclosed their desirability. It is the culmination of several years of work by George Grammer, *QST*'s technical editor (now on leave), not only in the writing but in the refining of the writing in the crucible of actual use — by teaching experimental classes and by surveying the progress of typical self-taught students. The aim has been to write an understandable nonmathematical treatment for busy, practical people of average education. Necessarily compact (as is any good text), information is deliberately presented without sugar-coating, but every effort has been made to make it understandable and to avoid saying things in such a way that they are intelligible only to those who already know the subject! The material has been so arranged in topical sections as to make it readily possible to find what is wanted, a multitude of subheadings identifying subjects at a glance. The information is presented concisely but with copious cross-references, to permit the background always to accompany the subject under consideration. We have endeavored to employ cross-references in such quantity that no treatment of any subject can be considered "too technical," since the references will lead the reader, if he needs it, to the applying fundamentals. Finally, this portion of the book arranges subjects in a logical order which can serve as the basis for a well-ordered radio study course. Indeed, Mr. Grammer's companion work, *A Course in Radio Fundamentals*, also published by the League, is written around this portion of the *Handbook*, providing for the student a proved and effective series of study assignments, directions for experiments, and examination questions.

The second part of the book is that which has been dearest to the heart of the practicing amateur. That amateur to-day may be engaged in rebuilding his station to improve its performance after the war, but much more probably he is working for Uncle Sam — in the armed forces or in a laboratory. Wherever he is, he and his similars need a reliable guide for the construction of various pieces of radio apparatus. The second part of the *Handbook* deals only with practical considerations, but reference to the first part of the book always will lead the reader quickly to any needed information on the whys thereof. The apparatus designs are the best we know for their respective jobs and they will be found reliable. At the end of many of the constructional chapters is a bibliography of articles in *QST*. In these will be found more extensive descriptions of some of the pieces of apparatus. Refererces to the bibliographies in these cases take such a form as (*Bib. 5*), which means that the fifth item in the bibliography at the end of that chapter gives reference to a *QST* article describing the particular piece of gear in somewhat greater detail.

A word about the reference system: It will be noted that each chapter is divided into sections and that these are numbered serially within each chapter. The number takes the form of two digits or groups separated by a hyphen. The first figure is the chapter number, the second the section number within the chapter. Cross-references in the text take such a form as (§ 4–7), for example, which means that the subject referred to will be found discussed in Chapter Four, Section 7.

Throughout the book, illustrations are serially numbered in each chapter. Thus Fig. 1107 can be readily located as the seventh illustration in Chapter Eleven. There is an extensive, carefully prepared index at the rear of the book.

Most of the technically skilled specialists on the League's headquarters staff at West Hartford — men who have earned their spurs in amateur radio — have participated in the present revision. It has already been mentioned that the first part of the book was written by Mr. Grammer. The revision of the second part is the work largely of Donald H. Mix, *QST*'s acting technical editor, Clinton B. DeSoto, the editor of *QST*, and George Hart, the League's acting communications manager, with Mr. Grammer's hand again appearing in some of the chapters. The production of the book has fallen on Mr. DeSoto's office, with special credit due Louisa B. Dresser, *QST*'s editorial assistant. All of us will be very happy if this edition of the *Handbook* can be of as much help to its wartime readers as earlier editions have been to the amateurs of peacetime.

KENNETH B. WARNER
Managing Secretary, A.R.R.L.

WEST HARTFORD, CONN.
October, 1943

TABLE OF CONTENTS

☆ ☆ ☆

Frontispiece: SCHEMATIC SYMBOLS
THE AMATEUR — HIS CODE OF ETHICS

INTRODUCTION

CHAPTER I *Amateur Radio* 9

PRINCIPLES AND DESIGN

CHAPTER II *Electrical and Radio Fundamentals* 19
CHAPTER III *Vacuum Tubes* 56
CHAPTER IV *Radio-Frequency Power Generation* 81
CHAPTER V *Radiotelephony* 104
CHAPTER VI *Keying* 125
CHAPTER VII *Receiver Principles and Design* 130
CHAPTER VIII *Power Supplies* 161
CHAPTER IX *Wave Propagation* 172
CHAPTER X *Antenna Systems* 178

CONSTRUCTION AND DATA

CHAPTER XI *Receiver Construction* 210
CHAPTER XII *Transmitter Construction* 225
CHAPTER XIII *Modulation Equipment* 276
CHAPTER XIV *V.H.F. Receivers* 287
CHAPTER XV *V.H.F. Transmitters and Transceivers* 306
CHAPTER XVI *The War Emergency Radio Service* 330
CHAPTER XVII *Antenna Construction* 377
CHAPTER XVIII *Carrier-Current Communication* 384
CHAPTER XIX *Measurements and Measuring Equipment* 392
CHAPTER XX *Workshop Practice* 417
CHAPTER XXI *Tube Characteristics and Miscellaneous Data* 422

OPERATING AND TRAFFIC HANDLING

CHAPTER XXII *Radio Operating Practice* 473

Index . . . . . At Rear

THE AMATEUR'S CODE

☆ ☆ ☆

1. *The Amateur is Gentlemanly*

He never knowingly uses the air for his own amusement in such a way as to lessen the pleasure of others. He abides by the pledges given by the ARRL in his behalf to the public and the Government.

2. *The Amateur is Loyal*

He owes his amateur radio to the American Radio Relay League, and he offers it his unswerving loyalty.

3. *The Amateur is Progressive*

He keeps his station abreast of science. It is built well and efficiently. His operating practice is clean and regular.

4. *The Amateur is Friendly*

Slow and patient sending when requested, friendly advice and counsel to the beginner, kindly assistance and coöperation for the broadcast listener; these are marks of the amateur spirit.

5. *The Amateur is Balanced*

Radio is his hobby. He never allows it to interfere with any of the duties he owes to his home, his job, his school, or his community.

6. *The Amateur is Patriotic*

His knowledge and his station are always ready for the service of his country and his community.

☆ ☆ ☆ ☆ ☆ ☆ ☆ ☆ ☆ ☆ ☆ ☆

CHAPTER ONE

Amateur Radio

AMATEUR radio is silent now — its keys stilled, its microphones lifeless. Dust gathers in scores of thousands of radio shacks, their operators off to war.

Amateur radio is silent now — but it is not dead. The radio hams of yesterday are working toward a different purpose, but fundamentally their work now is much the same as their hobby was before. And underlying their thoughts as they give their best in the uniformed services or in industry or research is the hopeful assurance that one day they will be back on the air as amateurs again.

To a hundred thousand people the world over, amateur radio represents the most satisfying, the most worth while of all hobbies. To communicate freely with other amateurs the world around at the mere touch of a key or microphone switch, on home-owned and usually home-built equipment, was for many years the supreme thrill to thousands of private citizens in every country on earth. Such freedom of communication, however, is characteristic of peace; it cannot continue in time of war. Thus, until peace again returns, amateur radio can exist only in the hearts of its followers, waiting for that day when free institutions again may flourish, when free men walk again in safety and confidence, when free speech is restored to all the peoples of the earth, and when free communication between them again becomes not a dream of the future but a matter-of-fact reality.

Not that amateur radio ever was really matter-of-fact. Every owner of a short-wave receiving set knows the thrill that comes from hearing a distant station broadcasting from some foreign land; the radio amateur has known the even-greater thrill of *talking* with people at these distant points! On one side of your radio amateur's table would be his high-frequency receiver; on the other his private transmitter, ready at the throw of a switch to be used in calling and "working" other amateurs in every corner of the globe. High power or expensive equipment was not required. Even a low-power transmitter made it possible to develop friendships in every State of the Union. Experience in the adjustment of apparatus, in using the right frequency band at the right time of day when foreign amateurs were on the air, and increasing operating skill on the part of the individual, enabled regular communication with other amateurs in every continent.

Nor has the personal enjoyment that comes from amateur radio been its only benefit. Putting together apparatus by one's own skill is a source of enduring satisfaction. The process of designing and constructing radio equipment has developed real engineering ability in thousands upon thousands of young men — and young women, too — throughout the country, an ability which serves them and the radio industry in time of peace and which is now serving their country to an inestimable extent in time of war. In peacetime, many an operator, engineer and executive in the commercial radio field got his practical background and much of his training from his amateur work; during the present conflict many thousands of amateurs are in communications work in the Army, Navy, Marines and Coast Guard, both in the field and in training centers (where entire staffs are made up almost wholly of amateurs), and additional hundreds possessing more advanced training are engaged in electronic research and development, particularly in connection with secret devices for aircraft detection, and in other confidential assignments requiring a high degree of specialized operating skill which, it has been found, is best possessed by the experienced amateur operator.

Amateur radio is as old as the art itself.

There were amateurs before the present century. Shortly after the late Guglielmo Marconi astounded the world with his first experiments proving that telegraph messages actually could be sent between distant points without wires, they were attempting to duplicate his results. Marconi himself probably was the first amateur — indeed, the distinguished inventor so liked to style himself. But amateur radio, as it has come to be known, was born when private citizens first saw in the new marvel a means for personal communication with others, and set about learning enough of the new art to build home-made stations.

Amateur radio's subsequent development may be divided into two periods: the period up to our entrance into World War I, in 1917, and the period between that war and our entrance into the present conflict — 1919–1941.

Amateur radio prior to 1917 bore little resemblance to radio as we know it to-day, except in principle. The equipment, both transmitting and receiving, was of a type now long obsolete. The range of even the highest-powered transmitters, under the most favorable conditions, would be scoffed at by even the least-informed person to-day. No United States amateur had ever heard the signals of a foreign amateur, nor had any foreigner ever reported hearing an

American. The oceans were a wall of silence, impenetrable, isolating us from every signal abroad. Even cross-country communication could be accomplished only by relays. "Short waves" meant 200 meters; the entire wavelength spectrum below 200 meters was a vast silence — no signal ever disturbed it. Years were to pass before its phenomenal possibilities were to be suspected.

Yet the period was notable for a number of accomplishments. It saw the number of amateurs in the United States increase to approximately 4,000 by 1917. It witnessed the first appearance of radio laws, licensing, wavelength specifications for the various services. ("Amateurs? — oh, yes — well, stick 'em on 200 meters; they'll never get out of their backyards with it.") It saw an increase in the range of amateur stations to such unheard-of distances as 500 and, in some cases, even 1,000 miles. U. S. amateurs were beginning to wonder, just before the war, if there were other amateurs in other countries across the seas and if — daring thought! — it might some day be possible to span the Atlantic with 200-meter equipment. Because all long-distance messages had to be relayed, this period saw relaying developed to a fine art — an ability that turned out to be a priceless accomplishment later when the government suddenly needed hundreds of skilled operators for war service in 1917. Most important of all, the period witnessed the birth of the American Radio Relay League, the amateur organization whose fame was to travel to all parts of the world and whose name was to be virtually synonymous with subsequent amateur progress and short-wave development. Conceived and formed by the famous inventor and amateur, the late Hiram Percy Maxim, the League was formally launched in early 1914. It was just beginning to exert its full force in amateur activities when the United States declared war in 1917, by that act sounding the knell for amateur radio for the next two and one-half years. By presidential direction, every amateur station was dismantled. Within a few months three-fourths of the amateurs of the country were serving with the armed forces of the United States as operators and instructors — a movement that was to be duplicated in striking manner a quarter of a century later.

Few amateurs to-day realize that World War I not only marked the close of the first phase of amateur development but came very near marking its end for all time. The fate of amateur radio was in the balance in the days immediately following the signing of the Armistice, in 1918. The government, having had a taste of supreme authority over all communications in wartime, was more than half inclined to keep it; indeed, the war had not been ended a month before Congress was considering legislation that would have made it impossible for the amateur radio of old ever to be resumed. President Maxim rushed to Washington, pleaded, argued; the bill was defeated. But there was still no amateur radio; the war ban continued in effect. Repeated representations to Washington met only with silence; it was to be nearly a year before licenses again were issued.

In the meantime, however, there was much to be done. The League's offices had been closed for a year and a half, its records stored away. Three-fourths of the former amateurs had gone to France; many of them would never come back. Would those who had returned be interested, now, in such things as amateur radio? Mr. Maxim determined to find out, and called a meeting of such members of the old board of directors of the League as he could locate. Eleven men, several still in uniform, met in New York and took stock of the situation. It wasn't very encouraging: amateur radio still banned by law, former members of the League scattered no one knew where, no organization, no membership, no funds. But those eleven men financed the publication of a notice to all the former amateurs that could be located, hired Kenneth B. Warner as the League's first paid secretary, floated a bond issue among old League members to obtain money for immediate running expenses, bought the magazine *QST* to be the League's official organ, and dunned officialdom until the wartime ban was lifted and amateur radio resumed again. Even before the ban was lifted, in October, 1919, oldtimers all over the country were flocking back to the League, renewing friendships, planning for the future. When licensing resumed, there was a headlong rush to get back on the air.

From the start, postwar amateur radio took on new aspects. Wartime needs had stimulated technical development in radio. There were new types of equipment. The vacuum tube was being used both for receiving and transmitting. Amateurs immediately adapted the new apparatus to 200-meter work. Ranges promptly increased; it became possible to bridge the continent with but one intermediate relay. Soon stations on one coast were hearing those on the other, direct!

These developments had an inevitable result. Watching DX come to represent 1,000 miles, then 1,500 and then 2,000, amateurs began to dream of trans-Atlantic work. Could they get across? In December, 1921, the ARRL sent abroad one of its most prominent amateurs, Paul F. Godley, with the best amateur receiving equipment available. Tests were run, and thirty American amateur stations were heard in Europe. The news electrified the amateur world. In 1922 another trans-Atlantic test was carried out; this time 315 American calls were logged by European amateurs and, what was more, one French and two British stations were heard on this side.

Everything now was centered on one objective: two-way communication across the Atlantic by amateur radio! It *must* be possible — but somehow they couldn't quite make it.

Further increases in power were out of the question; many amateurs already were using the legal maximum of one kilowatt. Better receivers? They already had the superheterodyne; it didn't seem possible to make any very great advance in that direction.

Then how about trying another wavelength, they asked? What about those wavelengths *below* 200 meters? The engineering world thought they were worthless — but then, that had been said about 200 meters too. There have been many wrong guesses in history. And so, in 1922, the assistant technical editor of *QST* (Boyd Phelps, now a lieutenant-commander in the Naval Reserve) carried on tests between Hartford and Boston on 130 meters. The results were encouraging. Early in 1923 the ARRL sponsored a series of organized tests on wavelengths down to 90 meters, and it was noted that as the wavelength dropped the reported results were better. A growing excitement began to filter into the amateur ranks.

Finally, in November, 1923, after some months of careful preparation, two-way amateur communication across the Atlantic became a reality, when Schnell, 1MO, and Reinartz, 1XAM (now W9UZ and W3IBZ respectively, and both commanders in the Naval Reserve), worked for several hours with Deloy, 8AB, in France, all three stations using a wavelength of 110 meters! Additional stations dropped down to 100 meters and found that they, too, could easily work two-way across the Atlantic. The exodus from the 200-meter region started.

By 1924 the entire radio world was agog, and dozens of commercial companies were rushing stations into the 100-meter region. Chaos threatened, until the first of a series of national and international radio conferences partitioned off various bands of frequencies for the different services clamoring for assignments. Although thought still centered on 100 meters, League officials at the first of these conferences, in 1924, came to the conclusion that the surface had only been scratched, and wisely obtained amateur bands not only at 80 meters but at 40 and 20 and 10 and even 5 meters.

Many amateurs promptly jumped down to the 40-meter band. A pretty low wavelength, to be sure, but you never could tell about these short waves. "Forty" was given a try, and responded by enabling two-way communication with Australia, New Zealand and South Africa.

How about 20 meters? This new band immediately showed entirely unexpected possibilities by enabling an East Coast amateur to communicate with another on the West Coast, direct, at high noon. The dream of amateur radio — daylight DX! — had come true.

From that time to the advent of World War II — when amateur radio again was closed down "for the duration" — represents a period of unparalleled accomplishment. The short waves proved a veritable gold mine. Country after country came on the air, until the confusion became so great that it was necessary to devise a system of international intermediates in order to distinguish the nationality of calls. The League began issuing what are known as WAC certificates to stations proving that they had worked all the continents. Over five thousand such certificates have been issued. Representatives of the ARRL went to Paris and deliberated with the amateur representatives of twenty-two other nations. On April 17, 1925, this conference formed the International Amateur Radio Union — a federation of national amateur societies.

Nor was experimental development lost sight of in the enthusiasm incident to international amateur communication. The experimentally minded amateur was constantly at work conducting tests in new frequency bands, devising improved apparatus for amateur receiving and transmitting, learning how to operate two and three and even four stations where previously there was room enough for only one.

In particular, the amateur experimenter pressed on to the development of the higher frequencies represented by the wavelengths below 10 meters, territory only a few years ago regarded even by most amateurs as comparatively unprofitable operating ground.

The amateur's experience with five meters is especially representative of his initiative and resourcefulness and of his ability to make the most of what is at hand. In 1924, first amateur experiments in the vicinity of 56 Mc. indicated that band to be practically worthless for distance work; signals at such frequencies appeared capable of being heard only to "horizon range." But the amateur turns even such apparent disadvantages to use. If not suitable for long-distance work, at least the band was ideal for "short-haul" communication. Beginning in 1931, then, there was tremendous activity in 56-Mc. work by hundreds of amateurs all over the country, and a complete new line of transmitters and receivers was developed to meet the special conditions incident to communicating at these very-high frequencies (then known as the "ultrahighs"). In 1934 additional impetus was given to this band when experiments by the ARRL with directive antennas resulted in remarkably consistent two-way communication over distances of more than 100 miles, without the aid of "hilltop" locations. While atmospheric conditions still are found to affect 5-meter DX, thousands of amateurs, as of the time of the close-down in December, 1941, were spending much of their time on the 56- and 112-Mc. bands, many of them having worked hundreds of stations at distances up to several thousand miles; even transcontinental distances were being spanned when conditions were right. To-day's concept of v.h.f. propagation was developed almost entirely through amateur research.

The amateur is constantly in the forefront of technical progress. Many developments by

amateurs have come to represent valuable contributions to the art, and the articles about them are as widely read in professional circles as by amateurs. At a time when only a few broadcast engineers in the country knew what was meant by "100 per cent modulation," the technical staff of the ARRL published articles in *QST* urging amateur 'phones to embrace it and showing them how to do it. This is only one example; the complete record of such accomplishments would more than fill this chapter alone. From the League's laboratory in 1932 came the "single-signal" superheterodyne — the world's most advanced high-frequency radiotelegraph receiver. In 1936 the "noise-silencer" circuit for superheterodynes was developed, permitting for the first time satisfactory high-frequency reception through the more common forms of man-made electrical interference.

Currently, hundreds of skilled amateurs are contributing their knowledge to the development of secret wartime radio devices, both in government and in private laboratories. Equally as important, the prewar technical progress by amateurs has provided the keystone for the development of modern military communications equipment. The sets now in use by the armed forces closely resemble the best prewar amateur equipment. This is only logical, because the problems of military communications in modern warfare — extreme congestion, special operating requirements, the need for compactness and efficiency — closely resemble the problems peculiar to the amateur service before the war, and for which the amateurs were forced to devise their own specialized solutions. The fact that amateurs on the staffs of the Signal Corps and Naval Research laboratories have been closely allied with the design of this new military communications equipment has been a vital factor.

On the fighting fronts their operating skill is equally valuable. Sharpened to the highest degree by years of communicating experience under the severest conditions of congestion, and with low-powered equipment, the amateur has the ability to hear signals so faint that they are inaudible to the average ear; and to read signals so confused with interference that for ordinary operators they are completely garbled. These abilities make the amateur a key figure in military communications.

Amateur radio is one of the finest of hobbies, but this fact alone would hardly merit such whole-hearted support as was given it by the United States government at past international conferences. There must be other reasons to justify such backing. One of these is a thorough appreciation by the Army and Navy of the value of the amateur as a source of skilled radio personnel in time of war. The other is best described as "public service."

We have already seen 3,500 amateurs contributing their skill and ability to the American cause in the Great War. After the war it was only natural that cordial relations should prevail between the Army and Navy and the amateur. Several things occurred in the next few years to strengthen these relations. In 1924, when the U. S. dirigible *Shenandoah* made a tour of the country, amateurs provided continuous contact between the big ship and the ground. In 1925, when the United States battle fleet made a cruise to Australia and the Navy wished to test out short-wave apparatus for future communication purposes, it was the League's Traffic Manager who was in complete charge of an experimental amateur-type set on the U.S.S. *Seattle* and proved for all time the superiority of the high frequencies.

Definite friendly relations between the amateur and the armed forces of the Government were cemented in 1925. In this year both the Army and the Navy came to the League with proposals for amateur coöperation. The radio Naval Reserve and the Army-Amateur Net are the outgrowth of these proposals. Thousands of amateurs in the Naval Reserve now are on active duty with the Navy, from the rank of captain on down, while other thousands are serving in the Army, Air Forces, Coast Guard and Marine Corps. Altogether, more than 25,000 radio amateurs are in the armed forces of the United States, while many more thousands are engaged in vital electronic research, development and manufacturing.

The public service record of the amateur is a brilliant one. These services can be roughly divided into two classes: emergencies and expeditions. It is regrettable that space limitations preclude detailed mention of amateur work in both these classes, for the stories constitute highlights of amateur accomplishment.

Since 1913, amateur radio has been the principal, and in many cases the only, means of outside communication in more than one hundred storm, flood and earthquake emergencies in this country. Among the most noteworthy were the Florida hurricanes of 1926, 1928 and 1935, the Mississippi and New England floods of 1927, and the California dam break of 1928. During 1931 there were the New Zealand and Nicaraguan earthquakes, and in 1932 floods in California and Texas. Outstanding in 1933 was the earthquake in southern California. In 1934 further floods in California and Oklahoma resulted in notable amateur accomplishment. The 1936 eastern states flood, the 1937 Ohio River valley flood, and the 1938 southern California flood and Long Island-New England hurricane disaster saw the greatest emergency effort ever performed by amateurs. In these disasters and many others — tornadoes, sleet storms, forest fires, blizzards — amateurs played a major rôle in the rescue work and earned wide commendation for their resourcefulness in effecting communication where all other means had failed.

During 1938 the ARRL inaugurated a new emergency-preparedness program, providing

for the appointment of regional and local Emergency Coördinators to organize amateur facilities and establish liaison with other agencies. This was in addition to the registration of personnel and equipment in the Emergency Corps. A comprehensive program of coöperation with the Red Cross, Western Union and others was put into effect. During the three years before the wartime close-down of amateur activity, this emergency organization proved the effectiveness of its planning and the proficiency of its personnel in more than a dozen important emergencies.

Although normal participation in such activity now is impossible, because of restrictions on amateur operation, the peculiar ability of the amateur to perform in such work has been notably recognized by the government in providing for amateur participation in the War Emergency Radio Service, established by the Federal Communications Commission to furnish emergency communication to local communities in connection with the Office of Civilian Defense. The background and functions of WERS are described in detail in Chapter Sixteen. Here it need only be noted that, by official statement, without the reservoir of amateur operators in this country to serve as a nucleus, the War Emergency Radio Service would have been an impossibility.

In mid-1943 the scope of WERS, limited before to war-created emergencies, was broadened to include the supplying of emergency communications in connection with natural disasters or other situations involving civilian defense or national security. Under this extension of its activities, amateurs in WERS again are in position to render emergency communications service in their traditional fashion.

Amateur coöperation with expeditions goes back to 1923, when a League member, Don Mix of Bristol, Conn., (now acting technical editor of *QST*) accompanied MacMillan to the Arctic on the schooner *Bowdoin* with an amateur station. Amateurs in Canada and the United States provided the home contact. The success of this venture was such that other explorers made inquiry of the League regarding similar arrangements for their journeys. In 1924 another expedition secured amateur coöperation; in 1925 there were three, and by 1928 the figure had risen to nine for that year alone; altogether, during subsequent years, a total of perhaps two hundred voyages and expeditions were thus assisted.

Emergency relief, expeditionary contact, experimental work and countless instances of other forms of public service — rendered, as they always have been and always will be, without hope or expectation of material reward — made amateur radio an integral part of our peacetime national life. To-day, the importance of amateur participation in the armed forces and other aspects of national defense emphasize more strongly than ever that amateur radio is vital to our national existence.

The American Radio Relay League

The American Radio Relay League is to-day not only the spokesman for amateur radio in this country but it is the largest amateur organization in the world. It is strictly of, by and for amateurs, is non-commercial and has no stockholders. The members of the League are the owners of the ARRL and *QST*.

The League is organized to represent the amateur in legislative matters. It is pledged to promote interest in two-way amateur communication and experimentation. It is interested in the relaying of messages by amateur radio. It is concerned with the advancement of the radio art. It stands for the maintenance of fraternalism and a high standard of conduct. One of its principal purposes is to keep amateur activities so well conducted that the amateur will continue to justify his existence.

With normal amateur activity suspended for the duration of the war, the ARRL Headquarters establishment is largely devoted to activities designed to advance the war effort — in training, and in personnel and apparatus procurement.

The operating territory of the League is divided into fourteen United States and six Canadian divisions. The affairs of the League are managed by a Board of Directors. One director is elected every two years by the membership of each United States division, and a Canadian General Manager is elected every two years by the Canadian membership. These directors then choose the president and vice-president, who are also directors. No one commercially engaged in selling or manufacturing radio apparatus or literature can become a member of the Board or an officer of the League.

The president, vice-president, secretary, treasurer and communications manager of the League are elected or appointed by the Board of Directors. These officers constitute an Executive Committee which, under certain restrictions, decides how to apply Board policies to matters arising between Board meetings.

The League owns and publishes the amateur's magazine, *QST*. *QST* goes to all members of the League each month. It acts as a monthly bulletin of the League's organized activities. It serves as a medium for the exchange of ideas. It fosters amateur spirit. Its technical articles are renowned. *QST* has grown to be the "amateur's bible," as well as one of the foremost radio magazines in the world. The profits *QST* makes are used in supporting League activities. Membership dues to the League include a subscription to *QST* for the same period.

Members of the League are entitled to write to Headquarters for information of any kind, whether it concerns membership, legislation, or general questions on the construction or operation of amateur apparatus. If you don't find the information you want in *QST* or the *Handbook*, write to ARRL Headquarters,

West Hartford 7, Connecticut, telling us your problem. All replies are made directly by letter; no charge is made for the service.

If you come to Hartford, drop out to Headquarters at 38 LaSalle Road, West Hartford. Visitors are always welcome.

From 1927 to 1936 the League operated its headquarters station, W1MK, at Brainard Field, Hartford's municipal airport on the Connecticut River. During the disastrous flood of 1936 this station was devastated. From the spring of 1936 until early summer of 1938 a temporary station was operated at the headquarters offices, at first under the old auxiliary call, W1INF, and later as W1AW. The call W1AW, held until his death by Hiram Percy Maxim, was issued to the League by special order of the FCC for use as the official headquarters station call.

From September, 1938, until the wartime closing of all amateur stations, the Hiram Percy Maxim Memorial Station at Newington, Conn., was in operation as the headquarters station. Operating on all amateur bands, with separate transmitters rated at the legal maximum input of one kilowatt and elaborate antenna systems, this station was regularly heard with good strength in every part of the world. The building in which it is housed was designed by order of the Board of Directors as a permanent memorial to the League's founder-president, Hiram Percy Maxim.

¶ Joining the League

Every person interested in amateur radio should join the League and start reading *QST*. Inquiries regarding membership should be addressed to the Secretary. There is a convenient application blank in the rear of this *Handbook*. An interest in amateur radio is the only qualification necessary in becoming an associate member of the ARRL, but according to a constitutional requirement only those members who possess an amateur operator license are entitled to full membership and voting privileges in director elections.

Learn to let the League help you. It is organized solely for that purpose, and its entire headquarters' personnel is trained to render to you the best assistance it can in matters concerning amateur radio.

Every amateur should read the League's magazine, *QST*, each month. It is filled with the latest developments in the radio field, with "ham" news from your particular section of the country. Each issue contains valuable instructional material of aid to the student of radio, as well as both practical and theoretical technical articles. One of its most valuable features at present is a monthly compilation of information on all known available jobs or assignments for which amateurs are especially qualified, particularly in the government service and the armed forces. A sample copy of *QST* will be sent for 25 cents, if you are unable to obtain one at your local newsstand.

¶ The Amateur Bands

Discussion of the frequency bands assigned to and formerly used by amateurs may seem academic at a time when all amateur operation is prohibited; yet, although a special order of the FCC has temporarily suspended amateur operation, the bands normally open for amateur operation still appear in the regulations of the Commission and a knowledge of them is necessary in order to pass the amateur operator examination, which is still being given to interested persons who may wish to qualify for their amateur operator licenses. For this reason, a brief discussion of the characteristics of the various amateur bands is in order.

As will be observed in Fig. 101, the amateur bands constitute narrow segments in that part of the radio spectrum lying between 1700 kc. and 300,000 kc. (or 300 Mc.). During the time when operation was permitted, amateurs distributed themselves throughout these frequency bands according to their operating objectives and the special operating characteristics of the bands themselves. Briefly, these were as follows:

The 1750-kc. band, which carried all amateur activity before the higher-frequency

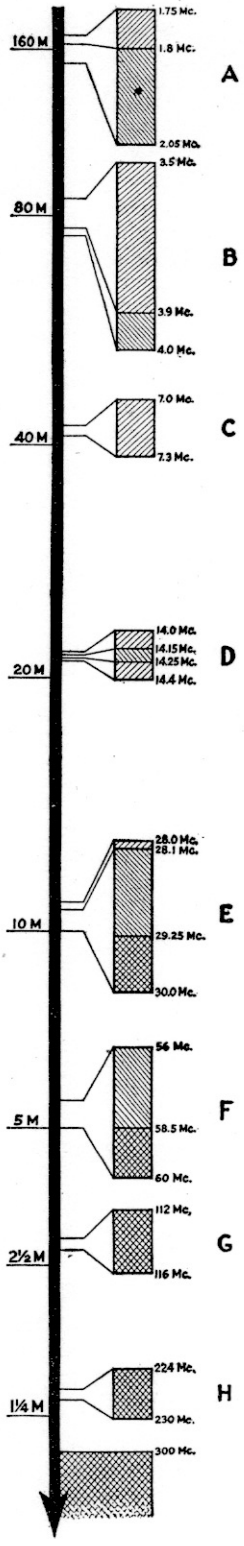

Fig. 101—The amateur bands. Areas shaded with diagonal lines sloping to left were open to c.w. telegraphy only. Areas with diagonal lines sloping to right were also open to amplitude-modulated telephony (and c.w.). Cross-hatched areas were open to frequency-modulated 'phone (as well as to regular a.m. 'phone and c.w.).

bands were opened, always served well for general contact all over the country, although during the height of the higher-frequency development there was some dwindling of activity. It was especially popular for radiotelephone work, but also was used for short-haul c.w. nets and code-practice transmissions for beginners. It was useful primarily for distances up to 400–500 miles, at night, but much longer distances were covered under good conditions.

The 3500-kc. band was regarded, in recent years, as best for consistent domestic communication and as good for coast-to-coast work at night except for a few summer months. Much of the friendly human contact between amateurs and most of their domestic message-handling took place in this band.

The 7000-kc. band was the most popular band for general amateur work for years, both domestic and international, and was useful mainly at nights for contacts over considerable distances as well as being satisfactory for distances of several hundred miles in daylight.

The 14,000-kc. or 14-Mc. band was the one used mostly for covering great distances in daylight, and in fact was the only band generally useful for daylight contacts over coast-to-coast and greater distances. It was, however, subject to sudden changes in transmitting conditions.

The 28,000-kc. (28-Mc.) band combined both the long-distance characteristics of the 14-Mc. band and some of the local advantages of the 56-Mc. band, but was popular chiefly because of its remarkable long-distance characteristics. Its disadvantage was lack of reliability because of seasonal effects and more sudden changes in transmitting conditions even than on 14 Mc.

The 56,000-kc. (56-Mc.) band was used largely for local and short-distance work over distances of ten to fifty miles. Because of compactness and ease of construction of the necessary apparatus, hundreds of stations operated "locally" there. Experiments by the ARRL technical staff beginning in 1934 disclosed that consistent two-way work could be done over distances of a hundred miles or more with suitable conditions and equipment, and such contacts became common by 1940–41. Occasional periodic "sky-wave" work over several thousand miles also was accomplished.

The 112,000-kc. (112-Mc.) band was the newest addition to the amateur spectrum, and before the close-down was attaining widespread popularity for the local work previously carried on in the 56-Mc. band. This band now figures prominently as the chief field of operations for the War Emergency Radio Service (WERS), in which hundreds of amateurs are employing their apparatus and skill on behalf of their communities for civilian-defense work.

The 224-Mc. band and the experimental region above 300 Mc. were not in widespread use for general communication, but were becoming increasingly of interest to the pioneering experimenter. The 224-Mc. band may be called on to carry part of the WERS load.

¶ Memorizing the Code

Amateur *operator* licenses are still being issued by the Federal Communications Commission, despite the cessation of amateur on-the-air activity. This is being done in part at the request of the military services, to whom possession of amateur license is practically equivalent to a certification of proficiency in radio, and in part to encourage future amateurs to prepare themselves for postwar operation.

Apart from the technical and regulatory phases of the examination, the most important requirement for obtaining an amateur operator's license is an ability to send and receive the continental code at the rate of 13 words per minute. Aside from that, knowledge of the code is especially desirable during wartime; it is not putting it too strongly to say that everyone should know the code and be able to use it.

The serious student of code — sending, receiving, operating practices, copying on the typewriter, etc. — would be best advised to purchase a copy of the ARRL booklet, *Learning the Radiotelegraph Code* (price, 25 cents, postpaid), and, in fact, anyone desirous of learning the code is advised to do so via the method outlined in this booklet. However, the following suggestions will suffice to enable one to acquire the rudiments of code ability.

The first job is *memorizing* the code. This is no task at all if you simply make up your mind to apply yourself to the job and get it over as quickly as possible. The complete Continental alphabet, most-used punctuation marks and numerals are shown in the table in Fig. 102. All the characters shown should be learned, starting with the alphabet and then going on to the numerals and punctuation marks. Take a few at a time, but as you progress review all the letters learned up to that time.

One suggestion: Learn to think of the letters in terms of *sound* rather than their appearance as printed dot-and-dash combinations. This is an important point; in fact, successful mastery of the code can be acquired only if one thinks always in terms of the sound of a letter, right from the start. Think of A as the sound "di*dah*" — not as a printed "dot-dash." The sound "dit" is pronounced as "it" with a "d" before it. The sound "dah" is pronounced with "ah" as in "father." The sound "dah" is always stressed or accented — not in a different tone of voice, but slightly drawn out and the least bit louder. The sound "dit" is pronounced as rapidly and sharply as possible; for purposes of easy combination, as a prefix, it is often shortened to "di." When combinations of the sounds appear as one letter, say them smoothly but rapidly, remembering to make the sound "di" staccato, and allowing equal stress to fall on every dah. There should never be a space or hesitation between dits and dahs of the same letter.

If someone can be found to send to you, either by whistling or by means of a buzzer or code oscillator, the best way is to enlist his co-

A	·—	didah
B	—···	dahdididit
C	—·—·	dahdidahdit
D	—··	dahdidit
E	·	dit
F	··—·	dididahdit
G	——·	dahdahdit
H	····	didididit
I	··	didit
J	·———	didahdahdahdah
K	—·—	dahdidah
L	·—··	didahdidit
M	——	dahdah
N	—·	dahdit
O	———	dahdahdah
P	·——·	didahdahdit
Q	——·—	dahdahdidah
R	·—·	didahdit
S	···	dididit
T	—	dah
U	··—	dididah
V	···—	didididah
W	·——	didahdah
X	—··—	dahdididah
Y	—·——	dahdidahdah
Z	——··	dahdahdidit

1	·————	didahdahdahdah
2	··———	dididahdahdah
3	···——	didididahdah
4	····—	dididididah
5	·····	dididididit
6	—····	dahdidididit
7	——···	dahdahdididit
8	———··	dahdahdahdidit
9	————·	dahdahdahdahdit
0	—————	dahdahdahdahdah

Period	·—·—·—
Comma	——··——
Question mark	··——··
Error	·····—·
Double dash	—···—
Wait	·—···
End of message	·—·—·
Invitation to transmit	—·—
End of work	···—·—

Fig. 102 — The Continental (International Morse) Code.

operation and learn the code by listening to it. It is best to have someone do this who is familiar with the code and who can be depended on to send the characters correctly. Learning the code is like learning a new language, and the sooner you learn to understand the language without mental "translation" the easier it will be for you. You don't think of the spoken letter U, for example, as being composed of two separate and distinct sounds — yet actually it is made up of the pure sounds "ee" and "$\overline{oo}$," spoken in rapid succession. You learned the letter U as a sound unit itself. Similarly, you should learn code letters as sounds themselves, and not as combinations of other sounds.

Don't think about speed at first; your first job is to learn all the characters to the point where you know them without hesitation.

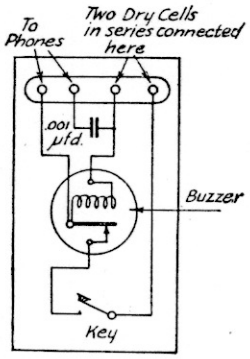

Fig. 103 — Wiring diagram of a buzzer code-practice set. The headphones are connected across the coils of the buzzer, with a condenser in series. The size of this condenser determines the strength of the signal in the 'phones. If the value shown gives an excessively loud signal, it may be reduced to 500 $\mu\mu$fd. or even 250 $\mu\mu$fd.

¶ Acquiring Speed by Buzzer Practice

When the code is thoroughly memorized, you can start to develop speed in receiving code transmission. Perhaps the best way to do this is to have two people learn the code together and send to each other by means of a buzzer-and-key outfit. An advantage of this system is that it develops sending ability, too, for the person doing the receiving will be quick to criticize uneven or indistinct sending. If possible it is a good idea to obtain the assistance

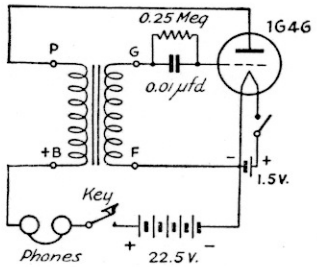

Fig. 104 — Wiring diagram of a simple vacuum-tube audio-frequency oscillator for use as a code-practice set.

of an experienced operator for the first few sessions, so that you will learn how well-sent characters should sound.

Either the buzzer set shown in Fig. 103 or one of the audio oscillators described will give satisfactory results as a practice set. The oscillator more closely simulates actual radio signals.

The battery-operated audio oscillator in Figs. 104 and 105 is easy to construct. However, it employs batteries, which are difficult to acquire in wartime. If nothing is heard in the headphones when the key is depressed, reverse the leads going to *either* transformer winding (not both).

The sets shown in Figs. 106 and 107 operate directly from the 115-volt a.c. or d.c. power line. That of Fig. 106 employs a neon-bulb oscillator functioning from rectified d.c.; almost any tube having a 5- or 6.3-volt filament, such as an 01A, 71A, etc., can be used as the half-wave rectifier (grid and plate connected together). If the tone is fuzzy, wind a single turn of insulated wire around the top of the neon bulb and connect it as shown by the dotted line. The oscillator in Fig. 107 uses a combination diode-pentode tube, the pentode section being used as a vacuum-tube oscillator.

After the practice set has been built, and another operator's help secured, practice sending turn and turn about to each other. Send single letters at first, the listener learning to recognize each character quickly, without hesitation. Following this, start slow sending of complete words and sentences, always trying to have the material sent at just a little faster rate than you can copy easily; this speeds up your mind. Write down each letter you recognize. Do *not* try to write down the dots and dashes; write down the letters. Don't stop to compare the sounds of different letters, or think too long about a letter or word that has been missed. Go right on to the next one, or each "miss" will cause you to lose several characters you might otherwise have gotten. If you exercise a little patience you will soon be getting every character, and in a surprisingly short time will be receiving at a good rate of speed. When you can receive 13 words a minute (65 letters a minute), have the sender transmit code groups rather than English text. This will prevent you from recognizing a word "on the way" and filling it in before you've really listened to the letters themselves.

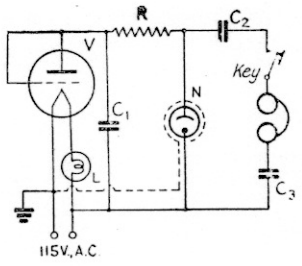

Fig. 106 — Neon-bulb audio oscillator code-practice set for 115-volt a.c.-line operation.
C_1 — 1.0 μfd.
C_2, C_3 — 0.002 μfd.
R — 3 megohms.
L — 25-watt lamp.
N — Neon bulb.
V — Any 5- or 6.3-volt triode.

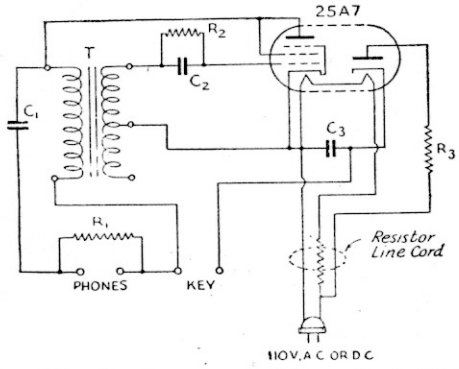

Fig. 107 — A.c.-d.c. vacuum-tube audio oscillator.
C_1 — 100-μμfd. midget mica.
C_2 — 250-μμfd. midget mica.
C_3 — 8-μfd. 200-volt electrolytic.
R_1 — 0.5 megohm, ½-watt. (A lower value, or a variable resistor, may be used to reduce volume.)
R_2 — 1 megohm, ½-watt.
R_3 — 50 ohms, 1-watt.
T — 3:1-ratio midget push-pull audio transformer.
Line cord resistor — 310 ohms. (A 300-ohm, 50-watt wire-wound fixed resistor may be used instead.)

After you have acquired a reasonable degree of proficiency, concentrate on the less common characters, as well as the numerals and punctuation marks. These prove the downfall of many applicants taking the code examination under the handicap of nervous stress.

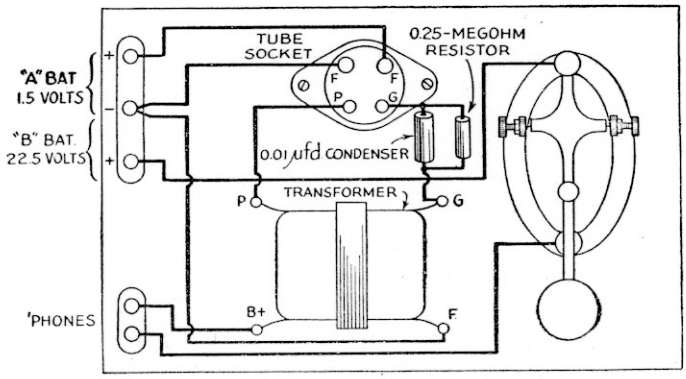

Fig. 105 — Layout of the audio-oscillator code-practice set. All parts may be mounted on a wooden baseboard, approximately 5 × 7 inches in size.

Using a Key

The correct way to grasp the key is important. The knob of the key should be about eighteen inches from the edge of the operating table and about on a line with the operator's right shoulder, allowing room for the elbow to rest on the table. A table about thirty inches in height is best. The spring tension of the key varies with different operators. A fairly heavy spring at the start is desirable. The back adjustment of the key should be changed until there is a vertical move-

ment of about one-sixteenth inch at the knob. After an operator has mastered the use of the hand key the tension should be changed and can be reduced to the minimum spring tension that will cause the key to open immediately when the pressure is released. More spring tension than necessary causes the expenditure of unnecessary energy. The contacts should be spaced by the rear screw on the key only and not by allowing play in the side screws, which are provided merely for aligning the contact points. These side screws should be screwed up to a setting which prevents appreciable side play but not adjusted so tightly that binding is caused. The gap between the contacts should always be at least a thirty-second of an inch,

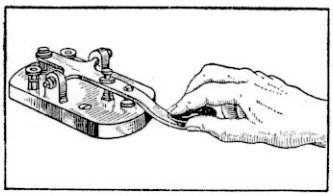

Fig. 108 — This sketch illustrates the correct position of the hand and fingers for good sending with a telegraph key.

since a too-finely spaced contact will cultivate a nervous style of sending which is highly undesirable. On the other hand too-wide spacing (much over one-sixteenth inch) may result in unduly heavy or "muddy" sending.

Do not hold the key tightly. Let the hand rest lightly on the key. The thumb should be against the left side of the key. The first and second fingers should be bent a little. They should hold the middle and right sides of the knob, respectively. The fingers are partly on top and partly over the side of the knob. The other two fingers should be free of the key. Fig. 108 shows the correct way to hold a key.

A wrist motion should be used in sending. The whole arm should not be used. One should not send "nervously" but with a steady flexing of the wrist. The grasp on the key should be firm, but not tight, or jerky sending will result. None of the muscles should be tense but they should all be under control. The arm should rest lightly on the operating table with the wrist held above the table. An up-and-down motion without any sideways action is best. The fingers should never leave the key knob.

Good sending may *seem* easier than receiving, but don't be deceived. A beginner should not attempt to send fast. Keep your transmitting speed down to the receiving speed, and bend your efforts to sending *well*. Do not try to speed things up too soon. A slow, even rate of sending is the mark of a good operator. Speed will come with time alone. Leave special types of keys alone until you have mastered the knack of handling the standard key. Because radio transmissions are seldom free from interference, a "heavier" style of sending is best to develop for radio work. A rugged, heavy key will help in developing this characteristic.

¶ Obtaining Government Licenses

It may occur to many readers that there is little point in obtaining an amateur operator license when amateur radio is not permitted. Far from it! An amateur operator license is a valuable possession, as many people engaged in the war effort have learned. In the Army, it may serve as a passport to a preferred position in the Signal Corps or Air Forces; in the Navy and Marine Corps, the holder of an amateur license (provided he also has had a high-school education and can pass the physical requirements) may be eligible for a rating as a petty officer. Even among officer candidates, in some branches possession of an amateur operator license is accepted as indicating certain proficiency in respect to special radio qualifications. This also applies to positions in various branches of the radio industry engaged in war work. Among women, possession of an amateur operator license is specified as one of the requirements for certain government positions open to feminine applicants. Both industry and Civil Service give preferred attention to amateur licensees.

When you are able to copy 13 words per minute, have studied basic transmitter theory and have familiarized yourself with the radio laws and amateur regulations, you are ready to give serious thought to securing the government amateur operator license which is issued you, after examination at a local district office, through the Federal Communications Commission at Washington, D. C.

Because a discussion of license application procedure, license renewal and modification, exemptions, and detailed information on the nature and scope of the license examination involves more detailed treatment than it is possible to give within the limitations of this chapter, it has been made the subject of a special booklet published by the League. At this point the prospective amateur should possess himself of a copy and settle down to a study of its pages, in order to familiarize himself with the intricacies of the law and prepare himself for his test. The booklet, *The Radio Amateur's License Manual*, may be obtained from ARRL headquarters for 25¢, postpaid. One of the most valuable features of this book is its representative examination questions with their correct answers.

Amateur licenses are issued entirely free of charge. They can be issued only to citizens of the United States, but the requirement of citizenship is the only limitation, and licenses are issued without regard to age or physical condition to anyone who successfully completes the examination.

A brief summary of the basic Communications Act and the amateur regulations and special orders current at the time this *Handbook* went to press will be found in Chapter Twenty-Two. All pertinent extracts from both the Communications Act and the FCC regulations are published in the *License Manual*.

CHAPTER TWO

Electrical and Radio Fundamentals

¶ 2-1 Fundamentals of a Radio System

THE BASIS of radio communication is the transmission of electromagnetic waves through space. The production of suitable waves constitutes radio transmission, and their detection, or conversion at a distant point into the intelligence put into them at the originating point, is radio reception. There are several distinct processes involved in the complete chain. At the transmitting point it is necessary first to generate power in such form that when it is applied to an appropriate radiator, called the antenna, it will be sent off into space in electromagnetic waves. The message to be conveyed must be superimposed on that power by suitable means, a process called modulation.

As the waves spread outward from the transmitter they rapidly become weaker, so at the receiving point an antenna again is used to abstract as much energy as possible from them as they pass. The wave energy is transformed into an electric current which is then amplified, or increased in amplitude, to a suitable value. Then the modulation is changed back into the form it originally had at the transmitter. Thus the message becomes intelligible.

Since these processes are performed by electrical means, a knowledge of the principles of electricity is necessary to understand them.

¶ 2-2 The Nature of Electricity

Electrons — All matter — solids, liquids and gases — is made up of fundamental units, called *molecules*. The molecule, the smallest subdivision of a substance retaining all its characteristic properties, is constructed of *atoms* of the elements comprising the substance.

The atom is made up of a central part, called the *nucleus*, around which minute particles or charges of electricity, called *electrons*, circulate. The atom can be compared roughly to the solar system, with the sun representing the nucleus and the planets the electrons. By far the greater part of the mass or weight of an atom is in the nucleus, but because of its extreme compactness the nucleus occupies only a small part of the space taken up by the atom. In the normal or *neutral* atom the electrical "charge" on each electron is balanced by an equal charge of opposite kind associated with the nucleus. The kind of electricity represented by the electron is called *negative*, while that associated with the nucleus is called *positive*.

The greater mass of the nucleus (the nucleus is more than 1800 times as heavy as the electrons associated with it) is considered to be principally in neutral particles — that is, particles which exhibit no electrical effects — bound together by some means. These neutral particles each may actually be the result of the combination of a positive and a negative particle, so that the charge on each is neutralized. The net positive charge associated with the nucleus can be looked upon as an excess of positive particles, or as an absence of enough negative charges to neutralize completely the positive charges present. Ordinary electrical activity is the result of movements of the electrons, or negative charges, so it is customary to consider electrical phenomena as caused by the presence or absence of these negative particles.

In the atoms of many substances, one or two of the outer electrons associated with the nucleus can be detached from the atom by suitable means, thus leaving the atom as a whole with a net positive charge. When this occurs, electrical activity becomes evident.

The unit of quantity — The amount of electricity represented by a single electron is extremely small — far too small to be used as a unit of quantity in practical electrical work. The practical unit of electrical quantity is the *coulomb*. One coulomb is equal to about 6.2×10^{18} electrons. Because the electron is so minute, the "granular" nature of electricity is not apparent in practical work.

Static and current electricity — An electrical charge may be either at rest (*static*) or moving. *Electrostatics* is that branch of electrical theory which deals with the behavior of electricity at rest. If an electrical charge is moving, its movement constitutes a *current* of electricity. The movement may take place through a vacuum, through a gas or liquid, or through solid materials (usually metals) called *conductors*. When the movement is through a solid, the collection of electrons constituting the original charge does not move as a unit through the entire path; instead, individual electrons all along the path are urged to leave the atoms to which they are attached. Each electron travels only a relatively short distance before finding another atom which is electron-deficient, and to which it tends to attach itself. The motion is, therefore, transmitted along the path from electron to electron, much in the same way that motion in a chain is transmitted from link

to link. Naturally, the ease with which the electron motion is transmitted depends upon the ease with which an electron can be detached from an atom of the substance through which the current is moving.

The flow of current through a conductor is accompanied by heating of the conductor, which may be explained as resulting from collisions between moving electrons and atoms, setting the latter into vibration. Thus there is a loss of energy, in the form of heat, accompanying the flow of current.

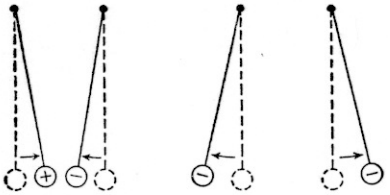

Fig. 201 — Attraction and repulsion of charged objects, as demonstrated by the pith-ball experiment described.

Insulators and conductors — Materials whose atoms will readily give up an electron are called *conductors*, while those in which all the electrons are firmly bound in the atom are called *insulators* or *dielectrics*. Most metals are good conductors, as also are acid or salt solutions. Among the insulators are wood, hard rubber, bakelite, quartz, glass, porcelain, textiles and many other nonmetallic materials.

Resistance — No substance is a perfect conductor, and there is also no such thing as a perfect insulator. The measure of the difficulty in moving an electron by electrical means is called *resistance*. Good conductors have low resistance (high *conductivity*), good insulators very high resistance. Between the two are materials which are neither good conductors nor good insulators, but nonetheless are useful since there often is need for intermediate values of resistance in electrical circuits.

Circuits — A circuit is simply a complete path along which electrons can move. There will normally be a source of energy (a battery, for instance), and a *load*, or portion of the circuit where the current is made to do useful work. There must be an unbroken path through which the electrons can move, with the source of energy acting as an electron pump and sending them around the circuit. The circuit is said to be *open* when no charges can move, because of a break in the path. It is *closed* when no break exists — when switches are closed and all connections are made.

2-3 Static Electricity

The electric charge — Many materials that have a high resistance can be made to acquire a charge (surplus or deficiency of electrons) by mechanical means, such as friction. The familiar crackling when a hard-rubber comb is run through hair on a dry winter day is an example of an electric charge generated by friction. Objects can have either a surplus or a deficiency of electrons — a surplus of electrons is called a *negative* charge; a lack of them is called a *positive* charge. The kind of charge is called its *polarity*. A negatively charged object is frequently called a negative *pole*, and a positively charged object a positive pole.

Attraction and repulsion — Unlike charges (one positive, one negative) exert an attraction on each other. This can be demonstrated by giving charges of opposite polarity to two very light, well-insulated conductors, such as bits of metal foil suspended from dry thread (Fig. 201). (Pith balls covered with foil frequently are used in this experiment.) When the two charged objects are brought close together, they will be attracted to each other. If the charges are equal and the charged bodies are permitted to touch, the surplus electrons on the negatively charged object will transfer to the positively charged object (i.e., the one deficient in electrons) and the two charges will neutralize, leaving both bodies uncharged. If the charges are not equal, the weaker charge neutralizes an equal amount of the stronger when the two bodies touch, upon which the excess of the stronger charge distributes itself over both. Both bodies then have charges of the same polarity, and a force of repulsion is exercised between them. Consequently, the bits of foil tend to spring away from each other. *Unlike charges attract, like charges repel.*

Electrostatic field — From the foregoing it is evident that an electric charge can exert a force through the space surrounding the charged object. The region in which this force is exerted is considered to be pervaded by an *electrostatic field*, this concept of a field being adopted to explain the "action at a distance" of the charge. The field is pictured as consisting of *lines of force* originating on the charge and spreading in all directions, finally terminating on other charges of opposite polarity. These other charges may be a very large distance away. The number of lines of force per unit area is a measure of the intensity of the field.

The general picture of a charged object in isolated space is shown in Fig. 202. This is an idealized situation, since in practice the charged object could not be completely isolated. The presence of other charges, or simply of insulators or conductors, in the vicinity will greatly change the configuration of the field. The direction of the field, as indicated by the

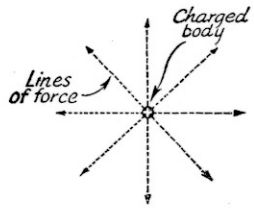

Fig. 202 — Lines of force from a charged object extend outward radially. Although only two dimensions are shown, the field extends in all directions from the charge, and should be visualized in three dimensions.

arrowheads, is away from a positively charged object; if the charge were negative, the direction would be toward the charge.

It should be understood that the field picture as represented above is a convenient method of explaining observed effects, and is not to be taken too literally. The electric force does not consist of separate lines like strings or rods, but completely pervades the medium through which the force is exerted. With this understanding, it is *convenient* to talk of lines of force and to measure the field intensity in terms of number of lines per unit area.

The intensity of the field dies away with distance from the charged object in a manner determined by its shape and the circumstances of its surroundings. In the case of an isolated charge at a point (an infinitesimally small object), the field strength is inversely proportional to the square of the distance. However, this relationship is not true in many other cases; in some important practical applications the field intensity is inversely proportional to the distance, not to its square.

Electrostatic induction — If a piece of conducting material is brought near a charged object, the field will exert a force on the electrons of the metal so that those free to move will do so. If the object is positively charged, as indicated in Fig. 203, the free electrons will move toward the end of the conductor nearest the charged body, leaving a deficiency of electrons at the other end. Hence, one end of the conductor becomes negatively charged while the other end has an equal positive charge. The lines of force from the charged body terminate on the conductor, where sufficient electrons accumulate to provide an electric intensity equal and opposite to that of the field at that point. Because of this effect, the electrostatic field inside the conductor is completely neutralized by the induced charge; in other words, the field does not penetrate the conductor. In radio work this provides the means by which electrostatic fields may be excluded from regions where they are not wanted.

Charges induced in a conductor as shown in Fig. 203-A are held in existence by the field from the charged object. On taking the conductor out of the field the electrons will redistribute themselves so that the charges disappear. However, if the conductor is connected to the earth through a wire while under the influence of the field, as shown in Fig. 203-B, the induced positive charge will tend to move as far as possible from the source of the field (that is, electrons will flow from the earth to the conductor). If the grounding wire is then removed, the conductor will be left with an excess of electrons and will have acquired a "permanent" charge — permanent, that is, so long as the conductor is well enough insulated to prevent the charge from escaping to earth or to other objects. The polarity of the induced charge always is opposite to the polarity of the charge which set up the original field.

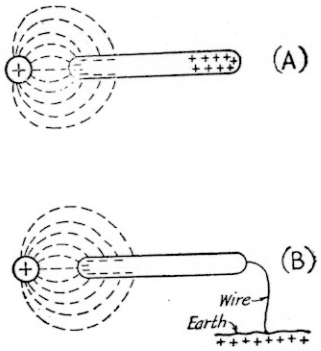

Fig. 203 — Electrostatic induction. The field from the positively charged body attracts electrons, which accumulate to form a negative charge. The opposite end of the conductor consequently acquires a positive charge. This may be "drained off" to earth, as shown at (B).

Energy in the electrostatic field — The expenditure of energy is necessary to place an electrical charge upon an object and thus establish an electrostatic field. Once the field is established and is constant, no further expenditure of energy is required. The energy supplied to establish the field is stored in the field; thus the field represents *potential* energy (that is, energy available for use). The potential energy is acquired in the same way that potential energy is given any object (a 10-pound weight, for instance) lifted against the gravitational pull of the earth. If the weight is allowed to drop, its potential energy is changed into the energy of motion. Similarly, if the electrostatic field is made to disappear, its potential energy is transformed into a movement of electrons, or into an electric current.

The potential energy of the lifted weight is measured by its weight and the distance it is lifted; that is, by the work done in lifting it. Similarly, the potential energy (called simply *potential*) of the electrostatic field at any point is measured by the work done in moving a charge of specified value to that point, against the repulsion of the field. In practice, absolute potential is of less interest than the *difference of potential* between two points in the field.

Potential difference — If two objects are charged differently, a potential difference exists between them. Potential difference is measured by an electrical unit called the *volt*. The greater the potential difference, the higher (numerically) the voltage. This voltage exerts an electrical pressure or *force* as explained above, and is often called *electromotive force* or, simply, *e.m.f.* It is not necessary to have unlike charges in order to have a difference of potential; both, for instance, may be negative, so long as one charge is more intense than the other. From the viewpoint of the stronger charge, the weaker one appears to be positive in such a case, since it has a smaller number of excess electrons; in other words, its *relative polarity* is positive. The greater the potential difference, the more intense is the electrostatic field between the two charged objects.

Capacity — More work must be done in moving a given charge against the repulsion of a strong field than against a weak one; hence, potential is proportional to the strength of the field. In turn, field strength is proportional to the charge or quantity of electricity on the charged object, so that potential also is proportional to charge. By inserting a suitable constant, the proportionality can be changed to an equality:

$$Q = CE$$

where Q is the quantity of charge, E is the potential, and C is a constant depending upon the charged object (usually a conductor) and its surroundings and is called the *capacity* of the object. Capacity is the ratio of quantity of charge to the potential resulting from it, or

$$C = \frac{Q}{E}$$

When Q is in coulombs and E in volts, C is measured in *farads*. A conductor has a capacity of one farad when the addition of one coulomb to its charge raises its potential by one volt.

The farad is much too large a unit for practical purposes. In radio work, the *microfarad* (one millionth of a farad) and the *micro-microfarad* (one millionth of a microfarad) are the units most frequently used. They are abbreviated *μfd.* and *μμfd.*, respectively.

The capacity of a conductor in air depends upon its size and shape. A given charge on a small conductor results in a more intense electrostatic field in its vicinity than the same charge on a larger conductor. This is because the charge distributes itself over the surface, hence its density (the quantity of electricity per unit area) is smaller on the larger conductor. Consequently, the potential of the larger conductor is smaller, for the same amount of charge. In other words, its capacity is greater because a greater charge is required to raise its potential by the same amount.

Condensers — If a grounded conductor, *A* (Fig. 204), is brought near a second conductor, *B*, which is charged, the former will acquire a charge by electrostatic induction. Since the

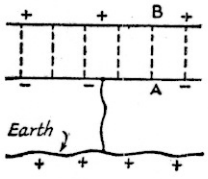

Fig. 204 — The principle of the condenser.

charge on *A* is opposite in polarity to that on *B*, the field set up by the induced charge on *A* will oppose the original field set up by the charge on *B*, hence the potential of *B* will be lowered. Because of this, more charge must be placed on *B* to raise its potential to its original value; in other words, its *capacity has been increased* by the presence of the second conductor. The combination is called a *condenser*.

The capacity of a condenser depends upon the areas of the conductors, as before, and also becomes greater as the distance between the conductors is decreased, since, with a fixed amount of charge, the potential difference between them decreases as they are moved closer together.

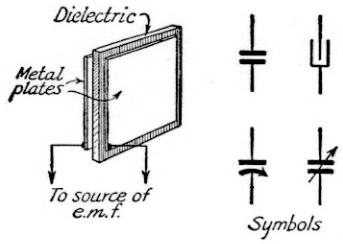

Fig. 205 — A simple type of condenser, consisting of two metal plates separated by dielectric material. Diagrammatic symbols for condensers are shown at the right. The two at the top indicate condensers of fixed capacity; the two below, condensers whose capacity is variable. The symbols on the left are commonly used.

If insulating or dielectric material other than air is inserted between the conductors, it is found that the potential difference is lowered still more — that is, there is a further increase in capacity. This lowering of the potential difference is considered to be the result of *polarization* of the dielectric. By this it is meant that the molecules of the substance tend to be distorted under the influence of the electrostatic field in such a way that the negative charges within the molecule are drawn toward the positively charged conductor, leaving the other end of the molecule with a positive charge facing the negatively charged conductor. Since the electrons are firmly bound in the atoms of the dielectric, there is no flow of current and the total charge on each atom is still zero, but there is a *tendency* toward separation which causes a reaction on the electrostatic field. The dielectric of a charged condenser thus is under mechanical stress, and if the potential difference between the plates of the condenser is great enough the dielectric may break down mechanically and electrically.

The ratio of the capacity of a condenser with a given dielectric material between its plates to the capacity of the same condenser with air as a dielectric is called the *specific inductive capacity* of the dielectric, or, probably more commonly, the *dielectric constant*. Strictly speaking, the comparison should be made to empty space (i.e., a vacuum) rather than to air, but the dielectric constant of air is so nearly that of a vacuum that the practical difference is negligible. A table of dielectric constants is given in Chapter Twenty-One.

Condensers have many uses in electrical and radio circuits, all based on their ability to store energy in the electric field when a potential difference or voltage is caused to exist between the plates — energy which later can be released to perform useful functions.

2-4 The Electric Current

Conduction in metals — When a difference of potential is maintained between the ends of a metallic conductor, there is a continuous drift of electrons through the conductor toward the end having a positive potential (relative polarity positive). This electron drift constitutes an electric current through the metal (§ 2-2). The speed with which the electron movement is established is very nearly the speed of light (300,000,000 meters, or approximately 186,000 miles, per second), so that the current is said to travel at nearly the speed of light. By this it is meant that the time interval between the application of the electromotive force and the flow of current in all parts of a circuit, even one extending over hundreds of miles, is negligible. However, the individual electrons do not move at anything approaching such a speed. The situation is similar to that existing when a mechanical force is transmitted by means of a rigid rod. A force applied to one end of the rod is transmitted practically instantaneously to the other end, even though the rod itself moves relatively slowly or not at all.

The magnitude of the electric current is the rate at which electricity is moved past a point in the circuit. If the rate is constant, then the current is equal to the quantity of electricity moved past a given point in some selected time interval. That is,

$$I = \frac{Q}{t}$$

where I is the intensity or magnitude of the current, Q is the quantity of electricity, and t is the time. If Q is in coulombs and t in seconds, the unit for I is called the *ampere*. One ampere of current is equal to one coulomb of electricity moving or "flowing" past a given point in a circuit in one second.

The currents used by different electrical devices vary greatly in magnitude. The current which flows in an ordinary 60-watt lamp, for instance, is about one-half ampere, the current in an electric iron is about 5 amperes, and that in a radio tube may be as low as 0.001 ampere.

When a current flows through a metallic conductor there is no visible or chemical effect on the conductor. The only physical effect is the heat developed (§ 2-2) as the result of energy loss in the conductor. Under normal conditions the rate at which heat is generated and that at which it is radiated by the conductor will quickly reach equilibrium. However, if the heat is developed at a more rapid rate than it can be radiated, the temperature will continue to rise until the conductor burns or melts.

Experimental measurements have shown that the current which flows in a given metallic conductor is directly proportional to the applied e.m.f., so long as the temperature of the conductor is held constant. There is no e.m.f. so small but that some current will flow as a result of its application to a metallic conductor.

Gaseous conduction — In any gas or mixture of gases (such as air, for example) there are always some free electrons — that is, electrons not attached to an atom — and also some atoms lacking an electron. Thus there are both positively and negatively charged particles in the gas, as well as many neutral atoms. An atom lacking an electron is called a *positive ion*, while the free electron is called a *negative ion*. The term *ion* is, in fact, applied to any elemental particle which has an electric charge.

If the gas is in an electric field, the free electrons will be attracted toward the source of positive potential and the positive ions will be attracted toward the source of negative potential. If the gas is at atmospheric pressure neither particle can travel very far before meeting an ion of the opposite kind, when the two combine to form a neutral atom. Since a neutral atom is not affected by the electric field, there is no flow of current through the gas.

However, if the gas is enclosed in a glass container in which two separate metal pieces called *electrodes* are sealed, and the gas pressure is then reduced by pumping out most of the gas, a different set of conditions results. At low pressure there is a comparatively large distance between each atom, and when an electric field is established by applying a difference of potential to the electrodes the ions can travel a considerable distance before meeting another ion or atom. The farther the ion travels the greater the velocity it acquires, since the effect of the field is to accelerate its motion. If the field is strong enough the ions will acquire such velocity that when one happens to collide with a neutral atom the force of the collision will knock an electron out of the atom, so that this atom also becomes *ionized*. The process is cumulative, and the freed electrons are attracted to the positive electrode while the positive ions are attracted to the negative electrode. This movement of charged particles constitutes an electric current through the gas.

Since an ion must acquire a certain velocity before it can knock an electron out of a neutral atom, a definite field strength is required before conduction can take place in a gas. That is, a certain value of potential difference, called the *ionizing potential*, must be applied to the electrodes. If less voltage is applied, the

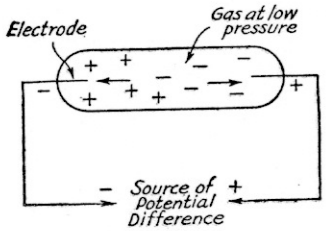

Fig. 206 — Illustrating conduction through a gas at low pressure. Positive ions are attracted to the negative electrode, while electrons are attracted to the positive electrode. This takes place only after the gas is ionized.

type of cell just described, it has a liquid

gas does not ionize and the current is negligible. On the other hand, once the gas is ionized an increase in potential does not have much effect on the current, since the ions already have sufficient velocity to maintain the ionization. The ionizing potential required depends upon the kind of gas and the pressure. Ionization is usually accompanied by a colored glow in the gas, different kinds of gases having different characteristic colors.

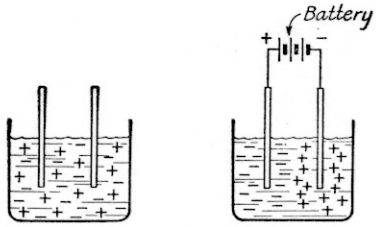

Fig. 207 — Electrolytic conduction. When an e.m.f. is applied to the electrodes, negative ions are attracted to the positively charged plate and positive ions to the negatively charged plate. The battery, which is the source of the e.m.f., is indicated by its customary symbol.

Current flow in liquids — A very large number of chemical compounds have the peculiar characteristic that, when they are put into solution, the component parts become ionized. For example, common table salt (sodium chloride), each molecule of which is made up of one atom of sodium and one of chlorine, will, when put into water, break down into a sodium ion (positive, with one electron deficient) and a chlorine ion (negative, with one excess electron). This can only occur so long as the salt is in solution — take away the water and the ions are recombined into the neutral sodium chloride. This spontaneous *dissociation* in solution is another form of ionization, and if two wires with a difference of potential across them are placed in the solution, the negative wire will attract the positive sodium ions and the positive wire will attract the negative chlorine ions. Thus an electric current will flow through the solution. When the ions reach the wires the electron surplus or deficiency will be remedied, and a neutral atom will be formed.

In this process, the water is decomposed into its gaseous constituents, hydrogen and oxygen. The energy used up in decomposing the water and in moving the ions is supplied by the source of potential difference. The energy used in decomposing the water is equivalent to an opposing e.m.f., of the order of a volt or two. If this constant "back voltage" is subtracted from the applied voltage, it is found that the current flowing through a given solution, or *electrolyte*, is proportional to the difference between the two voltages.

Current flow in vacuum — If a suitable metallic conductor is heated to a high temperature in a vacuum, electrons will be emitted from the surface. The electrons are freed from this *filament* or *cathode* because it has been heated to a temperature that gives them sufficient energy of motion to allow them to break away from the surface. The process is called *thermionic electron emission*. Now, if a metal plate is placed in the vacuum and given a positive charge with respect to the cathode, this plate or *anode* will attract a number of the electrons that surround the cathode. The passage of the electrons from cathode to anode constitutes an electric current. All thermionic vacuum tubes depend for their operation on the emission of electrons from a hot cathode.

Since the electrons emitted from the hot cathode are negatively charged, it is evident that they will be attracted to the plate only when the latter is at a positive potential with respect to the cathode. If the plate is negatively charged with respect to the cathode the electrons will be repelled back to the cathode, hence no current will flow through the vacuum. Consequently, a thermionic vacuum tube conducts current *in one direction only*. When the plate is positive, it is found that (if the potential is not too large) the current increases with an increase in potential difference between the plate and cathode. However, the relationship between current and applied voltage is not a simple one. If the voltage is made large enough all the electrons emitted by the cathode will be drawn to the plate, and a further increase in voltage therefore cannot cause a further increase in current. The number of electrons emitted by the cathode depends upon the temperature of the cathode and the material of which it is constructed.

Direction of current flow — Use was being made of electricity for a long time before its electronic nature was understood. While it is now clear that current flow is a drift of negative electrical charges or electrons toward a source of positive potential, in the era preceding the electron theory it was *assumed* that the current flowed from the point of higher positive potential to a point of lower (i.e., less positive or more negative) potential. While this assump-

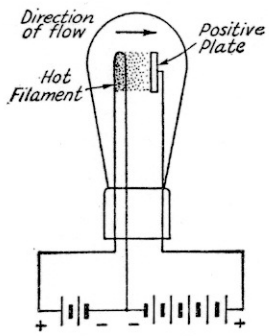

Fig. 208 — Illustrating conduction by thermionic emission of electrons in a vacuum tube. One battery is used *only* to heat the filament to a temperature where it will emit electrons. The other battery places a potential on the plate which is positive with respect to the filament, and as a result the electrons are attracted to the plate. The flow of electrons from filament to plate completes the electrical path, and current flows in the plate circuit.

tion turned out to be wholly wrong, it is still customary to speak of current as flowing "from positive to negative" in many applications. The practice often causes confusion, but this distinction between "current" flow and "electron" flow often must be taken into account. If electron flow is specifically mentioned there is of course no doubt as to the meaning, but when the direction of *current* flow is specified it may be taken, by convention, as being opposite to the direction of electron movement.

Primary cells — If two electrodes of dissimilar metals are immersed in an electrolyte, it is found that a small difference of potential exists between the electrodes. Such a combination is called a *cell*. If the two electrodes are connected together by a conductor external to the cell, an electric current will flow between them. In such a cell, chemical energy is converted into electrical energy. The difference of potential arises as a result of the fact that material from one or both of the electrodes goes into solution in the electrolyte, and in the process ions are formed in the vicinity of the electrodes. The electrodes acquire charges because of the electric field associated with the charged ions. The difference of potential between the electrodes is principally a function of the metals used, and is more or less independent of the kind of electrolyte or the size of the cell.

When current is supplied to an external circuit, two principal effects occur within the cell. The negative electrode (negative as viewed from outside the cell) loses weight as its material is used up in furnishing energy, and hydrogen bubbles form on the positive electrode. Since the gas bubbles are non-conducting, their accumulation tends to reduce the effective area of the positive electrode, and consequently reduces the current. The effect is cumulative, and eventually the electrode will be completely covered and no further current can flow. This effect is called *polarization*. If the bubbles are removed, or prevented from forming by chemical means, polarization is reduced and current can flow as long as there is material in the negative electrode to furnish the energy. A chemical which prevents the formation of hydrogen bubbles in a cell is called a *depolarizer*.

In addition to polarization effects, a cell has a certain amount of *internal resistance* because of the resistance of the electrodes and the electrolyte and the contact resistance between the electrodes and electrolyte. The *internal resistance* depends upon the materials used and the size and electrode spacing of the cell. Large cells with the electrodes close together will have smaller internal resistance than small cells made of the same materials.

A collection of cells connected together is called a *battery*. The term battery also is applied frequently (although incorrectly) to a single cell.

Dry cells — The most familiar form of primary cell is the *dry cell*. Like the elementary type of cell just described, it has a liquid electrolyte, but the liquid is mixed with other materials to form a paste. The cell therefore can be used in any position and handled as though it actually were dry.

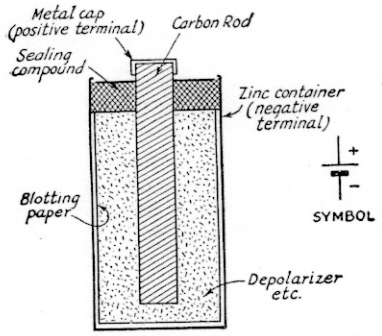

Fig. 209 — Construction of a dry cell.

The construction of an ordinary dry cell is shown in Fig. 209. The container is the negative electrode and is made of zinc. Next to it is a section of blotting material saturated with the electrolyte, a solution of sal ammoniac. The positive electrode is a carbon rod, and the space between it and the blotting paper is filled with a mixture of carbon, manganese dioxide (the depolarizer) and the electrolyte. The top is filled with sealing compound to prevent evaporation, since the cell will not work when the electrolyte drys out. The e.m.f. of a dry cell is about 1.5 volts.

Dry cells are made in various sizes, depending upon the current which they will be called upon to furnish. The construction frequently varies from that shown in Fig. 209, although in general the basic materials are the same in all dry cells. Batteries of small cells are assembled together as a unit for furnishing plate current for the vacuum tubes used in portable receiving sets; such "B" batteries, as they are called, can supply a current of a few hundredths of an ampere continuously. Larger cells, such as the common "No. 6" cell, can deliver currents of a fraction of an ampere continuously, or currents of several amperes for very short periods of time. The total amount of energy delivered by a dry cell is larger when the cell is used only intermittently, as compared with continuous use. The cell will deteriorate even without use, and should be put into service within a year or so from the time it is manufactured. The period during which it is usable (without having been put in service) is known as the "shelf life" of the cell or battery.

Secondary cells — The types of cells just described are known as *primary cells*, because the electrical energy is obtained directly from chemical energy. In some types of cells the chemical actions are reversible; that is, forcing a current through the cell, in the opposite direction to the current flow when the cell is delivering electrical energy, causes just the reverse chemical action. This tends to restore the cell to its original condition, and electrical

energy is transformed into chemical energy. The process is called *charging* the cell. A cell which must first be charged before it can deliver electrical energy is called a *secondary cell.*

A simple form of secondary cell can be made by immersing two lead electrodes in a dilute solution of sulphuric acid. If a current is forced through the cell, the surface of the electrode which is connected to the positive terminal of the charging e.m.f. will be changed to lead peroxide and the surface of the electrode connected to the negative terminal will be changed to spongy lead. After a period of charging the charging source can be disconnected, and the cell will be found to have an e.m.f. of about 2.1 volts. It will furnish a small current to an external circuit for a period of time. This *discharge* of electrical energy is accompanied by chemical action which forms lead sulphate on both electrodes. When the lead peroxide and spongy lead are converted to lead sulphate there is no longer a difference of potential, since both electrodes are now the same material, and the cell is completely discharged.

The lead storage battery — The most common form of secondary cell is the lead storage cell. The common storage battery for automobile starting consists of three such cells connected together electrically and assembled in a single container. The principle of operation is similar to that just described, but the construction of the cell is considerably more complicated. To obtain large currents it is necessary to use electrodes having a great deal of surface area and to put them as close together as possible. The electrodes are made in the form of rectangular flat plates, consisting of a latticework or grid of lead or an alloy of lead. The interstices of the latticework are filled with a paste of lead oxide. The electrolyte is a solution of sulphuric acid in water. When the cell is charged, the lead oxide in the positive plate is converted to lead peroxide and that in the negative plate to spongy lead. To obtain high current capacity, a cell consists of a number of positive plates, all connected together, and a number of negative plates likewise connected together. They are arranged as shown in Fig. 210, with alternate negative and positive plates kept from touching by means of thin *separators* of insulating material, generally treated wood or perforated hard rubber. The separators preferably should be porous, so that the electrolyte can pass through them freely; thus they do not impede the passage of current from one plate to the next. There is always one extra negative plate in such an assembly, because the active material in the positive plate expands when the cell is being charged and if all the expansion took place on one side the plate would be distorted out of shape.

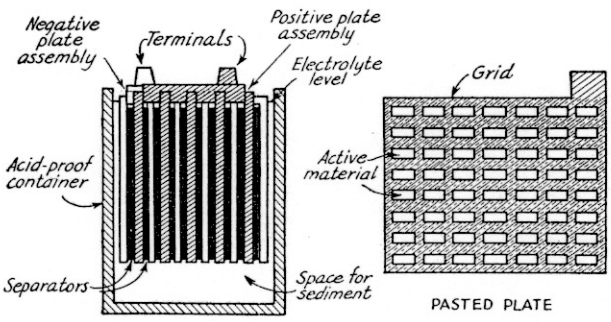

Fig. 210 — **Details of typical lead storage-battery construction.**

The e.m.f. of a fully charged storage cell is about 2.1 volts. When the e.m.f. drops to about 1.75 volts on discharge, the cell is considered to be completely discharged. Discharge beyond this limit may result in the formation of so much lead sulphate on the plates that the cell cannot be recharged, since lead sulphate is an insulator. During the charging process water in the electrolyte is used up, with the result that the sulphuric acid solution becomes more concentrated. The higher concentration increases the specific gravity of the solution, so that the specific gravity may be used to indicate the state of the battery with respect to charge. In the ordinary lead storage cell the solution is such that a specific gravity of 1.285 to 1.300 indicates a fully charged cell, while a discharged cell is indicated by a specific gravity of 1.150 to 1.175. The specific gravity can be measured by means of a *hydrometer*, shown in Fig. 211. For use with portable batteries, the hydrometer usually consists of a glass tube fitted with a syringe so that some of the electrolyte can be drawn from the cell into the tube. The hydrometer float is a smaller glass tube, air-tight and partly filled with shot to make it sink into the solution. The lower the specific gravity of the solution, the farther the float sinks into it. A graduated scale on the float shows the specific gravity directly, being read at the level of the solution.

Storage cells are rated in *ampere-hour capacity*, based on the number of amperes which can be furnished continuously for a stated period of time. For example, the cell may have a rating of 100 ampere-hours at an 8-hour discharge rate. This means that the cell will deliver 100/8 or 12.5 amperes continuously for 8 hours after having been fully charged. The ampere-hour capacity of a cell will vary with the discharge rate, becoming smaller as the rated time of discharge is made shorter. It also depends upon the size of the plates and their number. In automobile-type batteries the dimensions of the plates are fairly well standardized, so that the ampere-hour capacity is chiefly determined by the number of plates in a cell. It is, therefore, common practice to speak of "11-plate," "15-plate," etc., batteries as an indication of the battery capacity.

Lead storage batteries must be kept fully charged if they are to stay in good condition. If a discharged battery is left standing idle, lead sulphate will

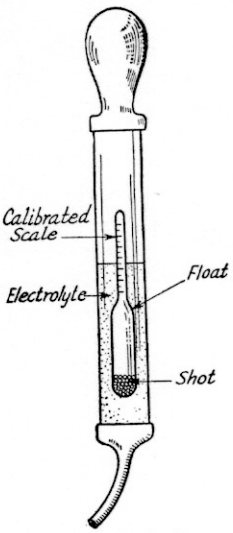

Fig. 211 — The hydrometer, a device with a calibrated scale for measuring the specific gravity of the electrolyte, used to determine the state of charge of a lead storage battery.

form on the plates and eventually the battery will be useless. When the battery is being charged, hydrogen bubbles are given off by the electrolyte which, in bursting at the surface, throw out fine drops of the electrolyte. This is called "gassing." The sulphuric-acid solution spray from gassing will attack many materials, and consequently care must be used to see that it is not permitted to fall on near-by objects. It should also be wiped off the battery itself.

A lead battery may be charged at its nominal discharge rate; i.e., a 100-ampere-hour battery, 8-hour rating, can be charged at 100/8, or 12.5 amperes. The charging voltage required is slightly more than the output voltage of the cell. The preferred method is to charge at the full rate until the cells start to "gas" freely, after which the charging rate should be dropped to about half its initial value until the battery is fully charged, as indicated by the hydrometer reading. Alternatively, the battery may be charged from a constant-potential source (about 2.3 volts per cell), when the rise of terminal voltage of the battery as it accumulates a charge will automatically "taper" the charging rate.

The solution in a lead storage battery will freeze at a temperature of about zero degrees Fahrenheit when the battery is discharged, but a fully charged battery will not freeze until the temperature reaches about 90 degrees below zero. Keeping the battery charged therefore will prevent damage by freezing.

Cells in series and parallel — For proper operation, many electrical devices require higher voltage or current than can be obtained from a single cell. If greater voltage is needed, cells may be connected in *series*, as shown in Fig. 212-A. The negative terminal of one cell is connected to the positive terminal of the next, so that the total e.m.f. of the battery is equal to the sum of the e.m.f.s of the individual cells. For radio purposes, batteries of 45 and 90 volts or more are built up in this way from 1.5-volt dry cells. An automobile storage battery consists of three lead storage cells in series, totalling 6.3 volts — or, in round figures, 6 volts. The current which may be taken safely from a battery composed of cells in series is the same as that which may be taken safely from one cell alone; since the same current flows through all cells, the current capacity is unchanged.

When the device or load to which the battery is to be connected requires more current than can be taken safely from a single cell, the cells may be connected in parallel, as shown in Fig. 212-B. In this case the total current is the sum of the currents contributed by the individual cells, each contributing the same amount if the cells are all alike. When cells are connected in parallel it is essential that the e.m.f.s all be the same, since if one cell generated a larger voltage than the others it would force current through the other cells in the reverse direction and thus would take most, if not all, of the load. Also, if one cell has a lower terminal voltage than the others it will take current from the others rather than carrying its fair share.

Cells may be connected in series-parallel, as in Fig. 212-C, to increase both the voltage and the current-carrying capacity of the battery.

§ 2-5 Electromagnetism

The magnetic field — Everyone is familiar with the fact that a bar or horseshoe magnet will attract small pieces of iron. Just as in the case of electrostatic attraction (§ 2–3) the concept of a *field*, in this case a field of *magnetic* force, is adopted to explain the magnetic action. The field is visualized as being made up of *lines* of magnetic force, the number of which per unit area determines the field strength. As in the case of the electrostatic field, the lines of force do not have physical existence but simply represent a convenient way of describing the properties of the force.

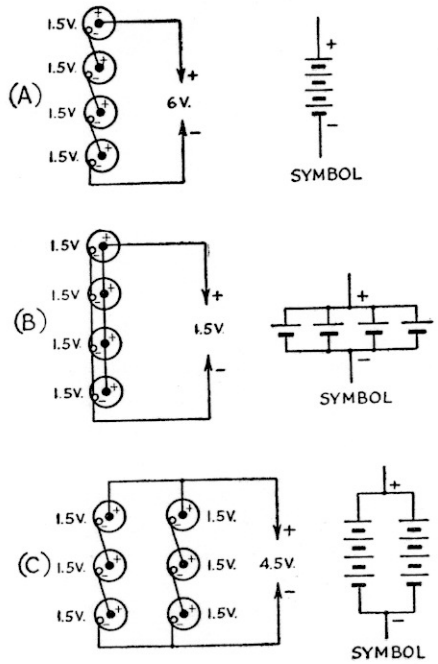

Fig. 212 — Series, parallel, and series-parallel connection of cells. Series connection increases the total voltage without changing current capacity; parallel connection increases current capacity without increasing voltage.

Magnetic attraction and repulsion — The forces exerted by the magnetic field are analogous to electrostatic forces. Corresponding to positive and negative electric charges, it is found that there are two kinds of magnetic poles. Instead of being called "positive" and "negative," however, the magnetic poles are called "north" (*N*) and "south" (*S*) poles. These names arise from the fact that, when a magnetized steel rod is freely suspended, it will turn into such a position that one end points toward the north. The end which points north is called the "north-seeking," or simply the "north," pole.

Unlike electric lines of force, which terminate on charges of opposite polarity (§ 2-3), magnetic lines of force are *closed upon themselves*. This is illustrated by the field about a bar magnet, as shown in Fig. 213-A. The lines extend through the magnet, the direction being taken from *S* to *N* inside the magnet and from *N* to *S* outside the magnet. If similar poles of two magnets are brought near each other, there is a force of repulsion between them, while dissimilar poles are attracted when brought close together. As in the case of electric charges, like poles repel, unlike poles attract.

If a bar magnet is cut in half, as in Fig. 213-B, it is found that the cut ends also are poles, of opposite kind to the original poles on the same piece. Such cutting can be continued indefinitely, and, no matter how small the pieces are made, there are always two opposite poles associated with each piece. In other words, a single magnetic pole cannot exist alone; it must always be associated with a pole of the opposite kind.

To explain this property of a magnet, it is considered that each molecule of a magnetic substance is itself a miniature magnet. If the material is not magnetized, the molecules are in random positions and the total magnetic effect is zero since there are just as many molecules tending to set up a magnetic field in one direction as there are others tending to set up a field in the opposite direction. When the substance becomes magnetized, however, the molecules are aligned so that most or all of the *N* poles of the molecular magnets are turned toward one end of the material while the *S* poles point toward the other end.

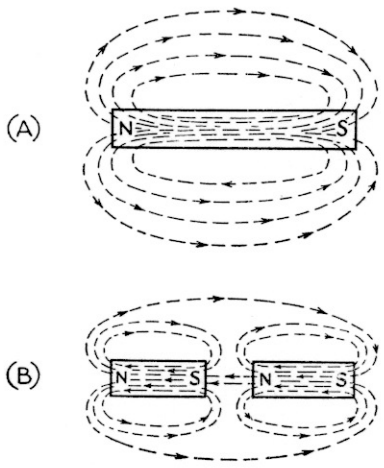

Fig. 213 — (A) The field about a bar magnet. The magnetic lines of force are continuous, part of the path being inside the magnet and part outside. (B) Cutting a magnet produces two magnets, each complete with N and S poles. With the magnets in the positions shown, some of the lines of force are common to both magnets.

Magnetic induction — When an unmagnetized piece of iron is brought into the field of a magnet, its molecules tend to align themselves as described in the preceding paragraph. If one end of the iron is near the *N* pole of the magnet, the *S* poles of the molecules will turn toward that end and an *S* pole is said to be *induced* in the iron. An *N* pole will appear at the opposite end. Because of the attraction between opposite poles, the iron will be drawn toward the magnet. Since the iron has become a magnet under the influence of the field, it also possesses the property of attracting other pieces of iron.

When the magnetic field is removed, the molecules may or may not resume their random positions. If the material is soft iron the magnetism disappears quite rapidly when the field is removed, but in some types of steel the molecules are slow to resume their random positions and such materials will retain magnetism for a long time. A magnet which loses its magnetism quickly when there is no external magnetizing force is called a *temporary magnet,* while one which retains its magnetism for a long time is called a *permanent magnet.* The tendency to retain magnetism is called *retentivity.* The process of destroying magnetism can be hastened by heating, which increases the motion of the molecules within the substance, as well as by mechanical shock, which also tends to disturb the molecular alignment.

Electric current and the magnetic field — Experiment shows that a moving electron generates a magnetic field of exactly the same nature as that existing about a permanent magnet. Since a moving electron, or group of electrons moving together, constitutes an electric current, it follows that the flow of current is accompanied by the creation of a magnetic field. When the conductor is a wire the magnetic lines of force are in the form of concentric circles around it and lie in planes at right angles to it, as shown in Fig. 214. The direction of this field is controlled by the direction of current flow.

There is an easily remembered method for finding the relative directions of the current and of the magnetic field it sets up. Imagine the fingers of the right hand curled about the wire, with the thumb extended along the wire in the direction of current flow (the conventional direction, from positive to negative, not the direction of electron movement). Then the fingers will be found to point in the direction of the magnetic field; that is, from *N* to *S*.

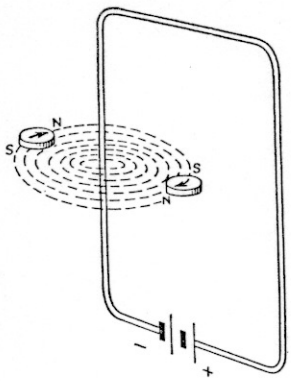

Fig. 214 — Whenever electric current passes through a wire, magnetic lines of force are set up in the form of concentric circles at right angles to the wire, and a magnetic field exists around the wire. The direction of this field is controlled by the direction of current flow, and can be traced by means of a small compass.

Magnetomotive force — The force which causes the magnetic field is called *magnetomotive force*, abbreviated *m.m.f.* It corresponds to electromotive force or e.m.f. in the electric circuit. The greater the magnetomotive force, the stronger the magnetic field; that is, the larger the number of magnetic lines per unit area. Magnetomotive force is proportional to the current flowing. When the wire carrying the current is formed into a coil so that the magnetic flux will be concentrated instead of being spread over a large area, the m.m.f. also is proportional to the number of turns in the coil. Consequently magnetomotive force can be expressed in terms of the product of current and turns, and the *ampere-turn*, as this product is called, is in fact the common unit of magnetomotive force. The same magnetizing effect can be secured with a great many turns and a weak current or with a few turns and a strong current. For example, if 10 amperes flow in one turn of wire, the magnetizing effect is 10 ampere-turns. If one ampere flows in 10 turns of wire, the m.m.f. also is 10 ampere-turns.

The magnetic circuit — Since magnetic lines of force are always closed upon themselves, it is possible to draw an analogy between the magnetic *circuit* and the ordinary electrical circuit. The electrical circuit also must be closed so that a complete path is provided around which the electrons or current can flow. However, there is no insulator for the magnetic field, so that the magnetic circuit is always complete even though no magnetic material (such as iron) may be present.

The number of lines of magnetic force, or *flux*, is equivalent in the magnetic circuit to current in the electric circuit. However, it is usual practice to express the strength of the field in terms of the number of lines per unit area, or *flux density*. The unit of flux density is the *gauss*, which is equal to one line per square centimeter, but the terms "lines per square centimeter" or "lines per square inch" are commonly used instead.

Corresponding to resistance in the electric circuit is the tendency to obstruct the passage of magnetic flux, which is called *reluctance*. The reluctance of good magnetic materials, such as iron and steel, is quite low.

The *permeability* of a material is the ratio of the flux which would be set up in a closed magnetic path or circuit of the material to the flux that would exist in a path of the same dimensions in air, the same m.m.f. being used in both cases. The permeability of air is assigned the value 1. The permeability of steels of various types varies from about 50 to several thousand, depending upon the materials alloyed with the steel. Very high permeabilities are attained in special materials such as "permalloy," which is an alloy of iron and nickel.

The permeability of magnetic materials depends upon the density of magnetic flux in the material. At very high flux densities the permeability is less than its value at low or moderate flux densities. This is because the flux in magnetic materials is proportional to the applied m.m.f. only over a limited range. As the m.m.f. increases more and more of the molecular magnets within the material become aligned, until eventually a point is reached where a very great increase in m.m.f. is required to cause a relatively small increase in flux. This is called *magnetic saturation*. In this region of saturation the permeability decreases, since the *ratio* between the number of lines in the material and the number in air, for the same m.m.f., is smaller than when the flux density is below the saturation point.

Energy in the magnetic field — Like the electrostatic field (§ 2-3), the magnetic field represents potential energy. Consequently the expenditure of energy is necessary to set up a magnetic field, but once the field has been established and remains constant no further energy is consumed in maintaining it. If by some means the field is caused to disappear, the stored-up magnetic energy is converted to energy in some other form. In other words the energy undergoes a transformation when the magnetic field is *changing*, being stored in the field when the field strength is increasing and being released from the field when the field strength is decreasing.

When a magnetic field is set up by a current flowing in a wire or coil, a certain amount of energy is used initially in bringing the field into existence. Thereafter the current must continue to flow, if the field is to be maintained at steady strength, but no expenditure of energy is required for this purpose. (There will be a steady energy loss in the circuit, but only because of the resistance of the wire.) If the current stops the energy of the field is transformed back into electrical energy, tending to keep the current flowing. The amount of energy stored and subsequently released depends upon the strength of the field, which in turn depends upon the intensity of the current and the circuit conditions, i.e., the relationship between field strength and current in the circuit.

Induced voltage — Since a magnetic field is set up by an electric current, it is not surprising to find that, in turn, a magnetic field can cause a current to flow in a closed electrical circuit.

That is, an e.m.f. can be *induced* in a wire in a magnetic field. However, since a *change* in the field is required for energy transformation, an e.m.f. will be induced only when there is a change in the field with respect to the wire.

This change may be an actual change in the field strength or may be caused by relative motion of the field and wire; e.g., a moving field and a stationary wire, or a moving wire and a stationary field. It is convenient to consider this induced e.m.f. as resulting from the wire's "cutting through" the lines of force of the field. The strength of the e.m.f. so induced is proportional to the *rate* of cutting of the lines of force.

If the conductor is moving parallel with the lines of force in a field, no voltage is induced since no lines are cut. Maximum cutting results when the conductor moves through the field in such a way that both its longer dimension and direction of motion are perpendicular to the lines of force, as shown in Fig. 215. When the conductor is stationary and the field strength varies, the induced voltage results from the alternate increase and decrease in the number of lines of force cutting the wire as the m.m.f. varies in intensity.

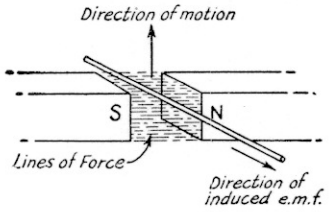

Fig. 215 — Showing how e.m.f. is induced in a conductor moving through a stationary magnetic field, cutting the lines of force. Conversely, a current sent through the conductor in the same direction by means of an external e.m.f. will cause the conductor to move downward.

Lenz's Law — When a voltage is induced and current flows in a conductor moving in a magnetic field, energy of motion is transformed into electrical energy. That is, mechanical *work* is done in moving the conductor when an induced current flows in it. If this were not so the induced voltage would be creating electrical energy, in violation of the fundamental principle of physics that energy can neither be created nor destroyed but only transformed. It is found, therefore, that the flow of current creates an opposing magnetic force tending to stop the movement of the wire. The statement of this principle is known as Lenz's Law: "In all cases of electromagnetic induction, the induced currents have such a direction that their reaction tends to stop the motion which produces them."

Motor principle — The fact that current flowing in a conductor moving through a magnetic field tends to oppose the motion indicates that current sent through a *stationary* conductor in a magnetic field would tend to *set the conductor in motion*. Such is the case. If moving the conductor through the field in the direction indicated in Fig. 215 causes a current to flow as shown, then, if the conductor is stationary and an e.m.f. is applied to send a current through the conductor in the same direction, the conductor will tend to move across the field in the *opposite* direction.

This principle is used in the electric motor. The same rotating machine frequently may be used either as a generator or motor; as a generator it is turned mechanically to cause an induced e.m.f., and as a motor electric current through it causes mechanical motion.

Self-induction — When an e.m.f. is applied to a wire or coil, current begins to flow and a magnetic field is created. Just before closing the circuit there was no field; just after closing it the field exists. Consequently, at the instant of closing the circuit the *rate of change* of the field is very rapid. Since the wire or coil carrying the current is a conductor in a changing field, an e.m.f. will be induced in the wire. This induced voltage is the *e.m.f. of self-induction*, so called because it results from the current flowing in the wire itself.

By the principle of conservation of energy (and Lenz's Law), the polarity of the induced voltage must be such as to oppose the applied voltage; that is, the induced voltage must tend to send current through the circuit in the direction opposite to that of the current caused by the applied voltage. At the instant of closing the circuit the field changes at such a rate that the induced voltage equals the applied voltage (it cannot exceed the applied voltage, because then it would be supplying energy to the source of applied e.m.f.), but after a short interval the rate of change of the field no longer is so rapid and the induced voltage decreases. Thus the current flowing is very small at first when the applied and induced e.m.f.s are about equal, but rises as the induced voltage becomes smaller. The process is cumulative, the current eventually reaching a final value determined only by the resistance in the circuit.

In forcing current through the circuit against the pressure of the induced or "back" voltage, work is done. The total amount of work done during the time that the current is rising to its final value is equal to the amount of energy stored in the magnetic field, neglecting heat losses in the wire itself. As explained before, no further energy is put into the field once the current becomes steady. However, if the circuit is opened and current flow caused by the applied e.m.f. ceases, the field collapses. The rate of change of field strength is very great in this case, and a voltage is again induced in the coil or wire. This voltage causes a current flow in the *same* direction as that of the applied e.m.f., since energy is now being restored to the circuit. The energy usually is dissipated in the spark which occurs when such a circuit is opened. Since the field collapses very rapidly when the switch is opened, the induced e.m.f. at such a time can be extremely high.

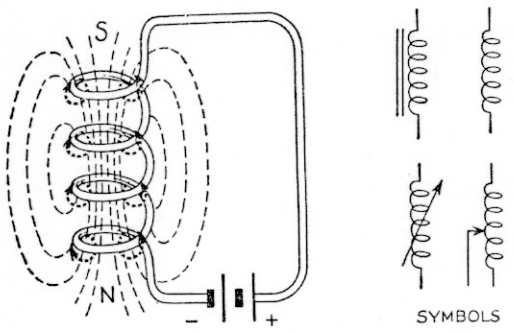

Fig. 216 — When the conducting wire is coiled, the individual magnetic fields of each turn are in such a direction as to produce a field similar to that of a bar magnet. The schematic symbols for inductance are shown at the right. The symbol at the left in the top row indicates an iron-core inductance; at the right, air core. Variable inductances are shown in the bottom row.

Inductance — As explained above, the strength of the self-induced voltage is proportional to the rate of change of the field. However, it is also apparent from the foregoing that it depends as well upon the properties of the circuit, since, if a number of similar conductors are in the same varying field, the same voltage will be induced in each. By combining the conductors properly, the total induced voltage in such a case will be the sum of the voltages induced in each wire. Also, the rate of change of field strength depends upon the strength of the field set up by a given amount of current flowing in the wire or coil, and this in turn depends upon the ampere-turns, permeability, length and cross-section of the magnetic path, etc. For a given circuit, however, the field strength will be determined by the current, and the rate of change of the field consequently will be determined by the rate of change of current. Hence, it is possible to group all the other factors into one quantity, a property of the circuit. This property is called *inductance*. When this is done, the equation giving the value of the induced voltage becomes:

Induced voltage
$= L \times$ rate of change of current

where L is the inductance.

Inductance is a property associated with all circuits, although in many cases it may be so small in comparison to other circuit properties (such as resistance) that no error results from neglecting it. The inductance of a straight wire increases with the length of the wire and decreases with increasing wire diameter. The inductance of such a wire is small, however. For a given length of wire, much greater inductance can be secured by winding the wire into a coil so that the total flux from the wire is concentrated into a small space and the flux density correspondingly increased. The unit of inductance is the *henry*. A circuit or coil has an inductance of one henry if an e.m.f. of one volt is induced when the current changes at the rate of one ampere per second. In radio work it is frequently convenient to use smaller units; those commonly used are the *millihenry* (one thousandth of a henry) and the *microhenry* (one millionth of a henry).

It will be recognized that the relationship between inductance and the magnetic field is similar to that between capacity and the electrostatic field. The greater the inductance, the greater the amount of energy stored in the magnetic field for a given amount of current; the greater the capacity, the greater the amount of energy stored in the electrostatic field for a given voltage.

The inductance of a coil of wire depends upon the number of turns, the cross-sectional dimensions of the coil, and the length of the winding. It also depends upon the permeability of the material on which the coil is wound, or *core*. Formulas for computing the inductance of air-core coils of the type commonly used in radio work, are given in Chapter Twenty-One.

Mutual inductance — If two coils are arranged with their axes coinciding, as shown in Fig. 217, a current sent through Coil 1 will cause a magnetic field which cuts Coil 2. Consequently, an e.m.f. will be induced in Coil 2 whenever the field strength is changing. This induced e.m.f. is similar to the e.m.f. of self-induction; that is,

Induced e.m.f.
$= M \times$ rate of change of current

where M is a quantity called the *mutual inductance* of the two coils. The mutual inductance may be large or small, depending upon the self-inductances of the coils and the proportions of the total flux set up by one coil which cuts the turns of the other coil. If all the flux set up by one coil cuts all the turns of the other coil the mutual inductance has its maximum possible value, while if only a small part of the flux set up by one coil cuts the turns of the other the mutual inductance may be relatively small. Two coils having mutual inductance are said to be *coupled*.

The *degree of coupling* expresses the ratio of actual mutual inductance to the maximum possible value. Coils which have nearly the maximum possible mutual inductance are said to be *closely*, or *tightly*, coupled, while if the

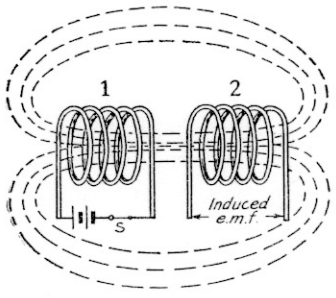

Fig. 217 — Mutual inductance. When the switch, S, is closed current flows through Coil 1, setting up a magnetic field which induces an e.m.f. in the turns of Coil 2.

mutual inductance is relatively small the coils are said to be *loosely* coupled. The degree of coupling depends upon the physical spacing between the coils and how they are placed with respect to each other. Maximum coupling exists when they have a common axis, as shown in Fig. 217, and are as close together as possible.

If two coils having mutual inductance are connected in the same circuit, the directions of the respective magnetic fields may be such as to add or oppose. In the former case the mutual inductance is said to be "positive"; in the latter case, "negative." Positive mutual inductance in such a circuit means that the total inductance is greater than the sum of the two individual inductances, while negative inductance means that the total inductance is less than the sum of the two individual inductances. The mutual inductance may be made either positive or negative simply by reversing the connections to *one* of the coils.

§ 2-6 Fundamental Relations

Direct current — A current which always flows in the same direction through a circuit is called a *direct current*, frequently abbreviated *d.c.* Current flow caused by batteries, for example, is direct current. One terminal of each cell is always positive and the other always negative, hence electrons are attracted only in the one direction around the circuit. To make the current change direction, the connections to the battery terminals must be reversed.

Work, energy and power — When a quantity of electricity is moved from a point of one potential to a point at a second potential, work is done. The work done is measured by the product of the quantity of electricity and the difference of potential through which it is moved; that is,

$$W = QE$$

In the practical system of units, with Q in coulombs and E in volts, the unit of work is called the *joule*. Energy, which is the capacity for doing work, is measured in the same units.

Since $I = Q/t$ when the current is constant (§ 2-1), $Q = It$. Substituting for Q in the equation above gives

$$W = EIt$$

where E is in volts, I in amperes, and t in seconds. One ampere flowing through a difference of potential of one volt for one second does one joule of work. *Power* is the time rate at which work is done, so that, if the work is done at a uniform rate, dividing the equation by t will give the electrical power:

$$P = EI$$

The unit of power is called the *watt*.

In practical work, the term "joule" is seldom used for the unit of work or energy. The more common name is *watt-second* (one joule is equal to one watt applied for one second). The watt-second is a relatively small unit; a larger one, the *watt-hour* (one watt of power applied for one hour) is more frequently used. Again, for some purposes the watt is too small a unit, and the *kilowatt* (1000 watts) is used instead. A still larger energy unit is the *kilowatt-hour*, the meaning of which is easily interpreted.

Fractional and multiple units — As illustrated by the examples in the preceding paragraph, it is frequently convenient to change the value of a unit so that it will not be necessary to use very large or very small numbers. As applied to electrical units, the practice is to add a prefix to the name of the fundamental unit to indicate whether the modified unit is larger or smaller. The common prefixes are *micro* (one millionth), *milli* (one thousandth), *kilo* (one thousand) and *mega* (one million). Thus, a microvolt is one millionth of a volt, a milliampere is one thousandth of an ampere, a kilovolt is one thousand volts, and so on.

Unless there is some indication to the contrary, it should be assumed that, whenever a formula is given in terms of unprefixed letters (E, I, P, R, etc.), the fundamental units are meant. If the quantities to be substituted in the equation are given in fractional or multiple units, conversion to the fundamental units is necessary before the equation can be used.

Ohm's Law — In any metallic conductor, the current which flows is directly proportional to the applied electromotive force. This relationship, which is known as *Ohm's Law*, can be written

$$E = RI$$

where E is the e.m.f., I is the current, and R is a constant, depending on the conductor, called the *resistance* of the conductor. By definition, a conductor has one unit of resistance when an applied e.m.f. of one volt causes a current of one ampere to flow. The unit of resistance is called the *ohm*.

Ohm's Law does not apply to all types of conduction, particularly to conduction through gases and in a vacuum. The law is of very great importance, however, because practically all electrical circuits use metallic conduction in whole or in part.

By transposing the equation, the following equally useful forms are obtained:

$$R = \frac{E}{I} \qquad I = \frac{E}{R}$$

The three equations state that, in a circuit to which Ohm's Law applies, the voltage across the circuit is equal to the current multiplied by the resistance; the resistance of the circuit is equal to the voltage divided by the current; and the current in the circuit is equal to the voltage divided by the resistance.

Resistance and resistivity — The resistance of a conductor is determined by the material of which it is made and its temperature, and is directly proportional to the length of the conductor (that is, the length of the path of the current through the conductor) and inversely

proportional to the area through which the current flows. If the temperature is constant,

$$R = k\frac{L}{A}$$

where R is the resistance, k is a constant depending upon the material of which the conductor is made, L is the length and A the area. For the purpose of giving a specific value to k, L is taken as one centimeter and A as one square centimeter (a cube of the material measuring one centimeter on a side); k is then the resistance in ohms of such a cube at a specified temperature. It is called the *specific resistance* or *resistivity* of the material. If the resistivity is known, the resistance of any conductor of known length and uniform cross-section readily can be determined by the formula above. The length must be in centimeters and the area in square centimeters.

The relationships given above are true only for unidirectional (direct) currents and low-frequency alternating currents. Modifications must be made when the current reverses its direction many times each second (§ 2-8).

Conductance and conductivity — The reciprocal of resistance is called *conductance*, and has the opposite properties to resistance. The lower the resistance of a circuit, the higher is the conductance, and vice versa. The symbol of conductance is G, and the relationship to resistance is

$$G = \frac{1}{R} \qquad R = \frac{1}{G}$$

The unit of conductance is called the *mho*. A circuit or conductor which has a resistance of one ohm has a conductance of one mho. By substituting $1/G$ for R in Ohm's Law,

$$G = \frac{I}{E} \qquad I = EG \qquad E = \frac{I}{G}$$

The reciprocal of resistivity is called the *specific conductance* or *conductivity* of a material, and is measured in mhos per centimeter cube. It is frequently useful to know the *relative* conductivity of different materials. This is usually expressed in *per cent conductivity*, the conductivity of annealed copper being taken as 100 per cent. A table of per cent conductivities is given in Chapter Twenty-One.

Power used in resistance — If two conductors of different resistances have the same current flowing through them, then by Ohm's Law the conductor with the larger resistance will have a greater difference of potential across its terminals. Consequently, more energy is supplied to the larger resistance, since in a given period of time the same amount of electricity is moved through a greater potential difference. The energy appears in the form of heat in the conductor. With a steady current, the heat will raise the temperature of the conductor until a balance is reached between the heat generated and that radiated to the surrounding air or otherwise carried away.

Since $P = EI$, substituting for E the appropriate form of Ohm's Law ($E = IR$) gives

$$P = I^2R$$

and making a similar substitution for I gives

$$P = \frac{E^2}{R}$$

That is, the power used in heating a resistance (or *dissipated* in the resistance) is proportional to the square of the voltage applied or to the square of the current flowing. In these formulas P is in watts, E in volts and I in amperes.

Further transposition of the equations gives the following forms, useful when the resistance and power are known:

$$E = \sqrt{PR} \qquad I = \sqrt{\frac{P}{R}}$$

Unless the circuit containing the resistance is being used for the specific purpose of generating heat, the power used in heating a resistance is generally considered as a loss. However, there are very many applications in radio circuits where, despite the loss of power, a useful purpose is served by introducing resistance deliberately. Resistances made to specified values and provided with connecting terminals are called *resistors*. They are frequently wound on ceramic or other heat-resisting tubing with wire having high resistivity.

Temperature coefficient of resistance — The resistance of most pure metals increases with an increase in temperature. The resistance of a wire at any temperature is given by the formula

$$R = R_0 (1 + at)$$

where R is the required resistance, R_0 is the resistance at 0 degrees C. (temperature of melting ice), t is the temperature (Centigrade), and a is the *temperature coefficient of resistance*. For copper, a is about 0.004; that is, starting from a temperature of 0° C., the resistance increases 0.4 per cent per degree above zero.

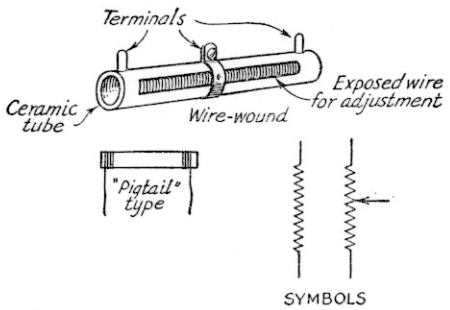

Fig. 218 — Two common types of fixed resistors. The wire-wound type is used for dissipating power of the order of 5 watts or more. "Pigtail" resistors, usually made of carbon or other resistance material in the form of a molded rod or as a thin coating on an insulating tube, rather than being wound with wire, are small in size but do not safely dissipate much power. Schematic symbols for fixed and variable resistors are shown at lower right.

Temperature coefficient of resistance becomes of importance when conductors operate at high temperatures. In the case of resistors used in electrical and radio circuits, the heat developed by current flow may raise the temperature of the resistance wire to several hundred degrees F. In such a case the resistance at operating temperature can be very considerably higher than the resistance at room temperature. Consequently such resistors are wound with wire which has a low temperature coefficient of resistance, so that the resistance will be as nearly constant as possible under all working conditions.

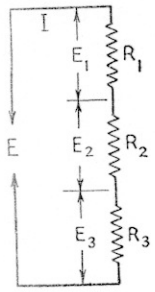

Fig. 219 — Resistances in series.

Resistances in series — When two or more resistances are connected so that the same current flows through each in turn, as shown in Fig. 219, they are said to be connected *in series*. Then, by Ohm's Law,

$$E_1 = IR_1$$
$$E_2 = IR_2$$
$$E_3 = IR_3$$

etc., where the subscripts 1, 2, 3 indicate the first, second and third resistor, and the voltages E_1, E_2 and E_3 are the voltages appearing across the terminals of the respective resistors. Adding the three voltages gives the total voltage across the three resistors:

$$E = E_1 + E_2 + E_3 = IR_1 + IR_2 + IR_3 = I(R_1 + R_2 + R_3) = IR$$

That is, the voltage across the resistors in series is equal to the current multiplied by the sum of the individual resistances. In the above equation, R, which denotes this sum, may be called the *equivalent* resistance or *total* resistance. The equivalent resistance of a number of resistors connected in series is, therefore, equal to the sum of the individual resistances.

Resistances in parallel — When a number of resistances are connected so that the same voltage is applied to all, as shown in Fig. 220, they are said to be connected *in parallel*. By Ohm's Law,

$$I_1 = \frac{E}{R_1} \qquad I_2 = \frac{E}{R_2} \qquad I_3 = \frac{E}{R_3}$$

so that the total current, I, which is the sum of the currents in the individual resistors, is

$$I = I_1 + I_2 + I_3 = \frac{E}{R_1} + \frac{E}{R_2} + \frac{E}{R_3} =$$

$$E\left(\frac{1}{R_1} + \frac{1}{R_2} + \frac{1}{R_3}\right) = E\frac{1}{R}$$

where R is the equivalent resistance — i.e., the resistance through which the same total current would flow if such a resistance were substituted for the three shown. Therefore,

$$\frac{1}{R} = \frac{1}{R_1} + \frac{1}{R_2} + \frac{1}{R_3}$$

That is, the reciprocal of the equivalent resistance of a number of resistances in parallel is equal to the sum of the reciprocals of the individual resistances. Since the reciprocal of resistance is conductance,

$$G = G_1 + G_2 + G_3$$

where G is the total conductance and G_1, G_2, G_3, etc., are the individual conductances in parallel.

To obtain R instead of its reciprocal the equation above may be inverted, so that

$$R = \frac{1}{\frac{1}{R_1} + \frac{1}{R_2} + \frac{1}{R_3}}$$

The number of terms in the denominator of this equation will, of course, be equal to the actual number of resistors in parallel.

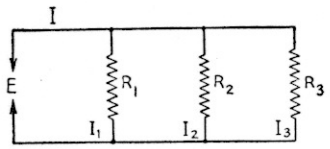

Fig. 220 — Resistances in parallel.

For the special case of only two resistances in parallel, the equation reduces to

$$R = \frac{R_1 R_2}{R_1 + R_2}$$

Series-parallel connection of resistors is shown in Fig. 221. When circuits of this type are encountered the equivalent or total resistance can be found by first adding the series resistances in each group, then treating each group as a single resistor so that the formula for resistors in parallel can be used.

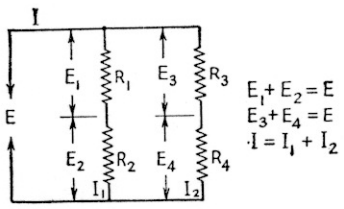

Fig. 221 — Series-parallel connection of resistances. Voltage and current relationships are given at the right.

Voltage dividers and potentiometers — Since the same current flows through resistors connected in series, it follows from Ohm's Law that the voltage (termed *voltage drop*) across each resistor of a series-connected group is proportional to its resistance. Thus, in Fig. 222-A, the voltage E_1 across R_1 is equal to the applied voltage, E, multiplied by the ratio of R_1 to the total resistance, or

$$E_1 = \frac{R_1}{R_1 + R_2 + R_3} \cdot E$$

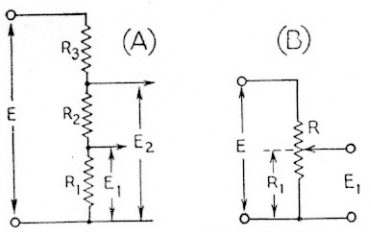

Fig. 222 — Voltage divider (A) and potentiometer (B).

Similarly, the voltage, E_2, is equal to

$$\frac{R_1 + R_2}{R_1 + R_2 + R_3} \cdot E$$

Such an arrangement is called a *voltage divider*, since it provides a means for obtaining smaller voltages from a source of fixed voltage. When current is drawn from the divider at the various tap points the above relations are no longer strictly true, since under such conditions the same current does not flow in all parts of the divider. Design data for such cases are given in § 8-10.

A similar arrangement is shown in Fig. 222-B, where the total resistance, R, is equipped with a sliding tap for fine adjustment. Such a resistor is frequently called a *potentiometer*.

Inductances in series and parallel — As explained in § 2-5, inductance determines the voltage induced when the current changes at a given rate. That is, $E = L \times$ rate of change of current. This resembles Ohm's Law, if L corresponds to R and the rate of change of current to I. Thus, by reasoning similar to that used in the case of resistors, it can be shown that, for inductances in series,

$$L = L_1 + L_2 + L_3$$

and for inductances in parallel,

$$L = \frac{1}{\frac{1}{L_1} + \frac{1}{L_2} + \frac{1}{L_3}}$$

where the number of terms in either equation is determined by the actual number of inductances connected in series or parallel.

These equations do not hold if there is mutual inductance (§ 2-5) between the coils.

Condensers in series and parallel — When a number of condensers are in parallel, as in Fig. 223-A, the same e.m.f. is applied to all. Consequently, the quantity of electricity stored in each is in proportion to its capacity. The total quantity stored is the sum of the quantities in the individual condensers:

$$Q = Q_1 + Q_2 + Q_3 = C_1E + C_2E + C_3E = (C_1 + C_2 + C_3)E = CE$$

where C is the equivalent capacity. The equivalent capacity of condensers in parallel is equal to the sum of the individual capacities.

When condensers are connected in series, as in Fig. 223-B, the application of an e.m.f. to the circuit causes a certain quantity of electricity to accumulate on the top plate of C_1. By electrostatic induction, an equal charge of opposite polarity (negative in the illustration) appears on the bottom plate of C_1, and, since the lower plate of C_1 and the upper plate of C_2 are connected together, this must leave an equal positive charge on the upper plate of C_2. This, in turn, causes the lower plate of C_2 to assume an equal negative charge, and so on down to the plate connected to the negative terminal of the source of e.m.f. In other words the same quantity of electricity is placed on each condenser, and this is equal to the total quantity stored. The voltage across each condenser will depend upon its capacity, and the sum of these voltages must equal the applied voltage. Thus,

$$E = E_1 + E_2 + E_3 = \frac{Q}{C_1} + \frac{Q}{C_2} + \frac{Q}{C_3} = Q\left(\frac{1}{C_1} + \frac{1}{C_2} + \frac{1}{C_3}\right) = \frac{Q}{C}$$

where C is the equivalent capacity. This leads to an expression similar to that for resistances in parallel:

$$C = \frac{1}{\frac{1}{C_1} + \frac{1}{C_2} + \frac{1}{C_3}}$$

where the number of terms in the denominator should be the same as the actual number of condensers in series.

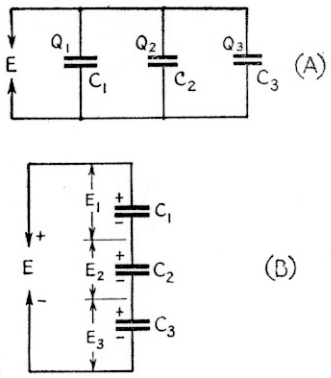

Fig. 223 — Condensers in parallel (A) and in series (B).

Time constant — When a condenser and resistor are connected in series with a source of e.m.f., such as a battery, the initial flow of current into the condenser is limited by the resistance, so that a longer period of time is required to complete the charging of the condenser than would be the case without the resistor. Likewise, when the condenser is discharged through a resistance, a measurable period of time is taken for the current flow to reach a negligible value. In the case of either charge or discharge the time required is proportional to the capacity and resistance, the product of which is called the *time constant* of the circuit. If C is in farads and R in ohms, or C in microfarads and R in megohms, this prod-

uct gives the time in seconds required for the voltage across a discharging condenser to drop to $1/e$, or approximately 37 per cent of its original value. (The constant e is the base of the natural series of logarithms.)

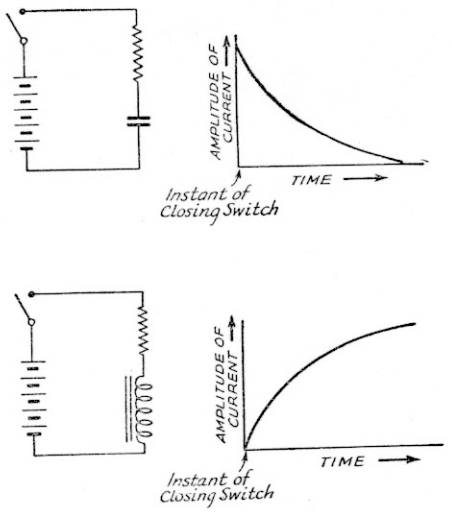

Fig. 224 — Showing how the current in a circuit combining resistance with inductance or capacity takes a finite period of time to reach its steady-state value.

A circuit containing inductance and resistance also has a time constant, for similar reasons. The time constant of an inductive circuit is equal to L/R, where L is in henrys and R in ohms. It gives the time in seconds required for the current to reach $1-1/e$, or approximately 63 per cent of its final steady value when a constant voltage is applied.

Measuring instruments — Instruments for measuring d.c. current and voltage make use of the force acting on a coil carrying current in a magnetic field (§ 2-5), produced by a permanent magnet, to move a pointer along a calibrated scale. All such instruments therefore are current operated, the current required for full-scale deflection of the pointer varying from several milliamperes to a few microamperes according to the sensitivity required. If the instrument is to read high currents, it is *shunted* (paralleled) by a low resistance through which most of the current flows, leaving only enough flowing through the instrument to give a full-scale deflection corresponding to the total current flowing through both meter and shunt. An instrument which reads microamperes is called a *microammeter* or *galvanometer;* one calibrated in milliamperes is called a *milliammeter;* one calibrated in amperes is an *ammeter*. A *voltmeter* is simply a milliammeter with a high resistance in series so that the current will be limited to a suitable value when the instrument is connected across a voltage source; it is calibrated in terms of the voltage which must appear across the terminals to cause a given value of current to flow. The series resistance is called a *multiplier*. A *wattmeter* is a combination voltmeter and ammeter in which the pointer deflection is proportional to the power in the circuit.

An ammeter or milliammeter is connected in series with the circuit in which current is being measured, so that the current flows through the instrument. A voltmeter is connected in parallel with the circuit.

2-7 Alternating Current

Description — An alternating current is one which periodically reverses its direction of flow. In addition to this alternate change in direction, usually the amount or *amplitude* of the current also varies continually during the period when the current is flowing in one direction. These variations are accompanied by corresponding variations in the magnetic field set up by the current, and it is this feature which makes the alternating current so useful. By means of the varying field, energy may be continually transferred (by induction) from one circuit to another without direct connection, and the voltage may be changed in the process. Neither of these is possible with direct current because, except for brief periods when the circuit is closed or opened, the field accompanying a steady direct current is unchanging, and hence there is no way of inducing an e.m.f. except by moving a conductor through the field (§ 2-5).

Alternating currents may be generated in several ways. Rotating electrical machines (*a.c. generators* or *alternators*) are used for developing large amounts of power when the rate of reversal is relatively slow. However, such machines are not suitable for producing currents which reverse direction thousands or millions of times each second. The thermionic vacuum tube is used for this purpose, as described in Chapter Three.

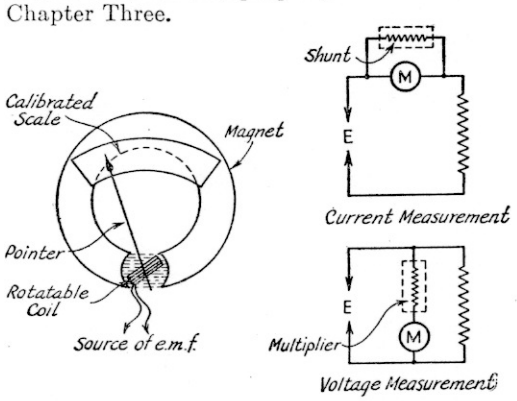

Fig. 225 — Principle of the d.c. measuring instrument. Current flowing through the rotatable coil in the field of the permanent magnet causes a force to act on the coil, tending to turn it. The turning tendency is counteracted by springs (not shown) so that the amount of movement is proportional to the value of the current in the coil. Connections for measuring current and voltage are indicated at the right. The shunt resistor is used for increasing the value of the current which the instrument can measure, by providing an alternate path through which some of the current can flow. The series multiplier limits the current when the instrument is used to measure voltage.

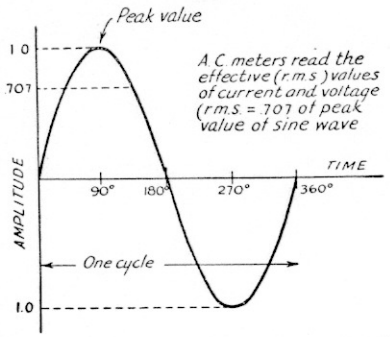

Fig. 226 — Sine-wave alternating current or voltage.

The simplest form of alternating current (or voltage) is shown graphically in Fig. 226. This chart shows that the current starts at zero value, builds up to a maximum in one direction, comes back down to zero, builds up to a maximum in the opposite direction and comes back to zero. The curve follows the sine law and is known as a *sine wave*, because of the wavelike nature of the curve which results when sine values are plotted on rectangular coördinates as a function of angle or time.

An alternating current or voltage of sine-wave form has angular velocity, period, frequency and phase.

Units of frequency — Alternating currents are identified by their frequency, the basic unit for which is the number of cycles per second. In radio work, where frequencies are extremely large, it is convenient to use two other units, *kilocycles* per second (cycles per second ÷ 1000) and megacycles per second (cycles per second ÷ 1,000,000). These are usually abbreviated kc. and Mc., respectively. Occasionally these abbreviations are written kcs. and Mcs. to indicate "kilocycles per second" and "megacycles per second" rather than simply "kilocycles" and "megacycles," but in both written and spoken usage it is understood that "per second" is an integral part of the term when the shorter forms are used.

Peak, instantaneous effective and average values — The highest value of current or voltage during the time when the current is flowing in one direction is called the *maximum* or *peak* value. For the sine wave, the peak has the same absolute value on both the positive and negative halves of the cycle. This is not necessarily true of waves having other than the sine form.

The value of current or voltage at any particular point of time in the cycle is called the *instantaneous* value. The instant for which the value is to be found can be specified in terms of time (fraction of the period) or of angle.

Since both the voltage and current are swinging continuously between their positive maximum and negative maximum values, it might be wondered how one can speak of so many amperes of alternating current when the value is changing continuously. The problem is simplified in practical work by considering that an alternating current has an effective value of one ampere when it produces heat, in flowing through a given resistance, at the same average rate as one ampere of continuous direct current flowing through the same resistance. This effective value is the square root of the mean of all the instantaneous current values squared. For the sine-wave form,

$$E_{\text{eff}} = \sqrt{\tfrac{1}{2}E_{\text{max}}^2}$$

For this reason, the effective value of an alternating current or voltage is also known as the *root-mean-square*, or *r.m.s.*, value. Hence, the effective value is the square root of ½, or 0.707, times the maximum value.

In a purely a.c. circuit the average current over a whole cycle must be zero, because if the average current on, say, the positive half of the cycle were greater than the average on the negative half, there would be a net current flow in the positive direction. This would correspond to a direct (although intermittent) current, and hence must be excluded because a purely alternating current was assumed. The "average" value of an alternating current is defined as the average current during the part of the cycle when the current is flowing in one direction only. It is of particular importance when alternating current is changed to direct current by the methods considered in later chapters. For a sine wave, the average value is equal to 0.636 of the peak value.

In the sine wave the three voltage values, peak, effective and average, are related to each other as follows:

$$E_{\text{max}} = E_{\text{eff}} \times 1.414 = E_{\text{ave}} \times 1.57$$
$$E_{\text{eff}} = E_{\text{max}} \times 0.707 = E_{\text{ave}} \times 1.11$$
$$E_{\text{ave}} = E_{\text{max}} \times 0.636 = E_{\text{eff}} \times 0.9$$

The relationships for current are equivalent to those given above for voltage.

Current, voltage and power in an inductance — When alternating current flows through an inductance, the continually varying magnetic field causes the continuous generation of an e.m.f. of self-induction (§ 2-5). The induced voltage at any instant is proportional to the rate at which the current is changing at that instant. If the current is a sine wave, it can be shown that the rate of change is greatest when the current is passing through zero and is least when the current is maximum. For this reason, the induced voltage is maximum when the current is zero and is zero when the current is maximum. The direction or polarity of the induced voltage is such as to tend to keep the current flowing when the current is decreasing and to prevent it from flowing when the current is increasing (§ 2-5). As a result, the induced voltage in an inductance lags 90 degrees behind the current.

By Lenz's Law, the induced voltage must always oppose the applied voltage; that is, the induced and applied voltages must be in phase opposition, or 180 degrees out of phase. Consequently, the *applied* voltage leads the current

by 90 degrees. These relationships are shown in Fig. 227. Using the voltage as a reference, the current in an inductance lags 90 degrees, or one-quarter cycle, behind the voltage. (In a

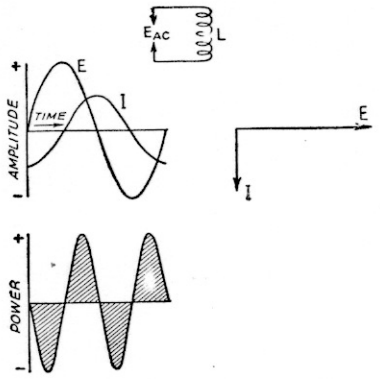

Fig. 227 — Voltage, current and power relations in an alternating-current circuit consisting of inductance only.

vector diagram, the current and voltage cannot be added vectorially because they are different kinds of quantities. In diagrams showing both current and voltage, one is generally used simply as a reference, to establish phase relationships. If several currents are shown on one diagram, they can of course be added together if they are in the same circuit; similarly, several voltages in the same circuit can be added. However, frequent use is made of vector diagrams to show phase relationships in *different* circuits, in which case the vectors representing current and/or voltage in different circuits cannot be added.)

When the current is increasing in either direction, energy is being stored in the magnetic field. At such times the voltage has the same polarity as the current, so that the product of the two, which gives the instantaneous power fed to the inductance, is positive. When the current is decreasing energy is being restored to the circuit and the applied voltage has the opposite polarity, so that the product of current and voltage is negative. This is also shown in Fig. 227. Positive power means power taken from the source (i.e., the source of the applied e.m.f.), while negative power means power returned to the source. Power is alternately taken and given back in each quarter cycle, and, since the amount given back is the same as that taken, the *average* power in an inductance is zero when considering a whole cycle. In a practical inductance the wire will have some resistance, so that some of the power supplied will be consumed in heating the wire, but if the resistance of the circuit is small compared to the inductance the power consumption is very small compared to the power which is alternately stored and returned.

Current, voltage and power in a condenser — When an alternating voltage is applied to a condenser, the condenser acquires a charge while the voltage is rising and loses its charge while the voltage is decreasing. The quantity of electricity stored in the condenser at any instant is proportional to the voltage across its terminals at that instant ($Q = CE$). Since current is the *rate* of transfer of quantity of electricity, the current flowing into the condenser (when it is being charged) or out of it (when it is discharging) consequently will be proportional to the rate of change of the applied voltage. If the voltage is a sine wave, its rate of change will be greatest when passing through zero and least when the voltage is maximum. As a result, the current flowing into or out of the condenser is greatest when the voltage is passing through zero and least when the voltage reaches its peak value.

This relationship is shown in Fig. 228. Whenever the voltage is rising (in either direction) the current flow is in the same direction as the applied voltage. When the voltage is decreasing and the condenser is discharging, the current flows in the opposite direction. This is of course the normal condition for charge and discharge of a condenser. The energy stored in the condenser on the charging part of the cycle is restored to the circuit on the discharge part, and the total energy consumed in a whole cycle therefore is zero. A condenser operating on a.c. takes no average power from the source, except for such actual energy losses as may occur as the result of heating of the dielectric (§ 2-3). The energy loss in air condensers used in radio circuits is negligibly small except at extremely high frequencies.

As shown by Fig. 228, the phase relationship between current flow and applied voltage is such that the current leads the voltage by 90 degrees. This is just the opposite to the inductance case.

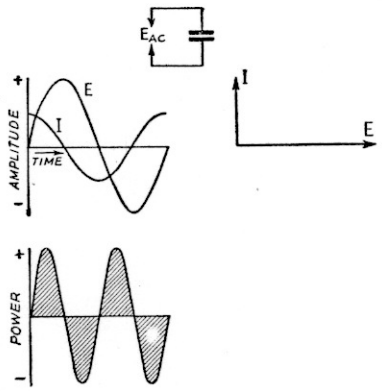

Fig. 228 — Voltage, current and power relations in an alternating-current circuit consisting of capacity only.

Current, voltage and power in resistance — In a circuit containing resistance only there are no energy storage effects, and consequently the current and voltage are in phase. The current therefore always flows in the same direction as the applied voltage, and, since the power is always positive, there is continual power

dissipation in the resistance. The relationships are shown in Fig. 229.

Strictly speaking, no circuit can have resistance only, because the flow of current always

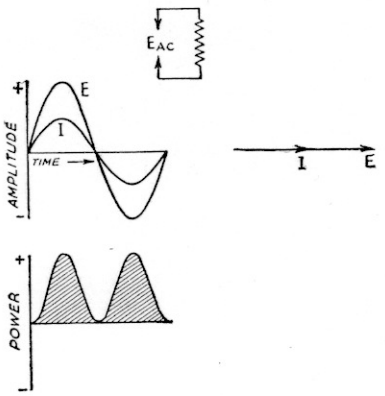

Fig. 229 — Voltage, current and power relations in an alternating-current circuit consisting of resistance only.

is accompanied by the creation of a magnetic field and every conductor also has a certain amount of capacity. Whether or not such residual inductance and capacity are large enough to require consideration is determined by the frequency at which the circuit is to operate.

The a.c. spectrum — Alternating currents of different frequencies have different properties and are useful in many varieties of ways. For the transmission of power to light homes, run motors and perform familiar everyday tasks by electrical means, low frequencies are most suitable. Frequencies of 25, 50 and 60 cycles are in common use, the latter being most widely used in this country. The range of frequencies between about 15 and 15,000 cycles is known as the *audio-frequency* range, because when frequencies of this order are converted from a.c. into air vibrations, as by a loudspeaker or telephone receiver, they are distinguishable as sounds having a tone pitch proportional to the frequency. Frequencies above 15,000 cycles (15 kilocycles) are used for radio communication, because with frequencies of this order it is possible to convert electrical energy into radio waves which can be radiated over long distances.

For convenience in reference, the following classifications for radio frequencies have been recommended by an international technical conference and are now increasingly in use:

10 to 30 kilocycles	Very-low frequencies
30 to 300 kilocycles	Low frequencies
300 to 3000 kilocycles	Medium frequencies
3 to 30 megacycles	High frequencies
30 to 300 megacycles	Very-high frequencies
300 to 3000 megacycles	Ultrahigh frequencies
3000 to 30,000 megacycles	Superhigh frequencies

Until recently, older terminology was in common use; for example, all frequencies above 30 megacycles formerly were considered to be in the "ultrahigh-frequency" region.

¶ 2-8 Ohm's Law for Alternating Currents

Resistance — Since current and voltage are always in phase through a resistance, the instantaneous relations for a.c. are equivalent to those in d.c. circuits. By definition, the effective units of current and voltage for a.c. are made equal to those for d.c. in resistive circuits (§ 2-7). Therefore the various formulas expressing Ohm's Law for d.c. circuits apply without any change to a.c. circuits containing resistance only, or for purely resistive parts of complex a.c. circuits. See § 2-6.

In applying the formulas, it must be remembered that consistent units must be used. For example, if the instantaneous value of current is used in finding voltage or power, the voltage found will be the instantaneous voltage and the power will be the instantaneous power. Likewise, if the effective value is used for one quantity in the formula, the unknown will be expressed in effective value. Unless otherwise indicated, the effective value of current or voltage is always understood to be meant when reference is made to "current" or "voltage."

Reactance — In an a.c. circuit containing inductance or capacity, but no resistance, there is no consumption of power — simply a continuous back-and-forth transfer of energy between the magnetic or electric field and the circuit (§ 2-7). Since the average power is zero, the Ohm's Law formulas cannot be applied in terms of peak or effective voltages and currents. Nevertheless, if the frequency is constant the current which flows in an inductive or capacitive circuit is directly proportional to the voltage applied; that is,

$$E = XI$$

where X is a constant depending upon the circuit, and is called the *reactance* of the circuit. By transposition, the formula can be written

$$X = \frac{E}{I} \qquad I = \frac{E}{X}$$

These expressions are quite similar to those for the resistive circuit, and the quantity X has the same effect upon current flow as does resistance in a resistive circuit. Consequently, the ohm is used as the unit of reactance, just as it is for resistance. Unlike resistance, however, reactance does not use up or dissipate power.

Inductive reactance — When alternating current flows through an inductance, the induced voltage and applied voltage are equal (§ 2-7). Since the induced voltage is equal to the inductance of the coil multiplied by the rate of change of current, it is evident that a given value of voltage (to oppose a fixed applied voltage) can be induced either by using a large inductance and a small rate of change of current or by using a large rate of current change and a small inductance, so long as the product of the two is constant. The rate of change of current is determined by the amplitude of the current and the angular velocity.

Therefore, for sine-wave current,

$$E = 2\pi fLI, \text{ or } \frac{E}{I} = 2\pi fL$$

Since $X = E/I$, then

$$X_L = 2\pi fL$$

where the subscript L indicates that the reactance is inductive. That is, inductive reactance is proportional to inductance and to the applied frequency. At low frequencies a large inductance must be used to obtain high reactance, but at very high frequencies the same value of reactance can be obtained readily with quite a small inductance.

The fundamental units (ohms, cycles, henrys) must be used in the above equation, or appropriate factors inserted if other units are employed. If inductance is in millihenrys, frequency should be in kilocycles; if inductance is in microhenrys, frequency should be in megacycles, to bring the answer in ohms.

Capacitive reactance — With a fixed value of applied voltage, the quantity of electricity stored in a condenser of given capacity is always the same ($Q = CE$), and, if losses are negligible, the same quantity of electricity is taken out of the condenser on discharge. When an a.c. voltage is applied to a condenser the alternate charge and discharge, as the applied voltage rises and falls and reverses polarity, constitutes current flow "through" the condenser. The amplitude of the current is proportional to the rate of change of the voltage (§ 2-7) and also to the capacity of the condenser, since both these quantities increase the amount of electricity transferred in the circuit in a given period of time. Since rate of change of voltage is proportional to the amplitude of the voltage and the angular velocity, then, for sine-wave voltage,

$$I = 2\pi fCE, \text{ or } \frac{E}{I} = \frac{1}{2\pi fC}$$

Since $X = E/I$, then

$$X_C = \frac{1}{2\pi fC}$$

where the subscript C indicates that the reactance is capacitive. Capacitive reactance is *inversely* proportional to capacity and to the applied frequency. For a given value of capacity, the reactance decreases as the frequency increases.

Fundamental units (farads, cycles per second) must be used in the right-hand side of the equation to obtain the reactance in ohms. Conversion factors must be used if the frequency and capacity are in units other than cycles and farads. If C is in microfarads and f in megacycles, the conversion factors cancel and the reactance will be given in ohms.

Impedance — In any series circuit the same current flows through all parts of the circuit. If a resistance and inductance are connected in series to form an a.c. circuit they both carry the same current, but the voltage across the resistance is in phase with the current while the voltage across the inductance leads the current by 90 degrees. In a d.c. circuit with resistances in series, the applied voltage is equal to the sum of the voltages across the individual resistances (§ 2-6). This is also true of the a.c. circuit with resistance and inductance in series if the *instantaneous* voltages are added algebraically to find the instantaneous value of applied voltage. But, because of the phase difference between the two voltages, the maximum value of the applied voltage will not be the sum of the maximum values of the two voltages (§ 1-9), so that the effective values cannot be added directly.

The relationships are shown by means of vectors in Fig. 230. If the current vector is used as a reference, the voltage across the resistance is in phase with the current and hence lies on the same line. The voltage across the inductance is 90 degrees ahead of the current, and therefore is drawn at right angles upward. The resultant voltage is, consequently, the hypothenuse of a right triangle, and, by geometry,

$$E^2 = E^2_L + E^2_R, \text{ or } E = \sqrt{E^2_R + E^2_L}$$

Since $E_R = IR$ and $E_L = IX_L$, substitution gives

$$E = I\sqrt{R^2 + X^2_L}, \text{ or } \frac{E}{I} = \sqrt{R^2 + X^2_L}$$

E/I is called the *impedance* of the circuit and is designated by the letter Z. The impedance determines the voltage which must be applied to the circuit to cause a given current to flow. The unit of impedance is, therefore, the ohm, just as in the case of resistance and reactance, which also determine the ratio of voltage to current. However, the phase angle between voltage and current must be specified, along with the impedance, for the true nature of the impedance to be known.

Similar consideration of resistance and capacity in series leads to the same expression for the impedance of such a circuit. However, in this case the voltage across the condenser lags the current, so that the "impedance tri-

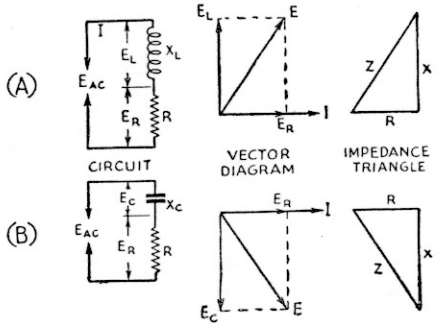

Fig. 230 — Voltage and current relationships in a.c. circuits having resistance and inductance or resistance and capacity. Vector diagrams should be drawn to scale for particular values of voltage or reactance and resistance.

angle" is drawn with the condenser voltage or reactance extending downward. The general formula is

$$Z = \sqrt{R^2 + X^2}$$

Ohm's Law for alternating current circuits then becomes

$$I = \frac{E}{Z};\ Z = \frac{E}{I};\ E = IZ$$

In summary, impedance is a generalized quantity applying to a.c. or d.c. circuits, simple or complex. In a d.c. circuit or in an a.c. circuit containing resistance only, the phase angle is zero (current and voltage are in phase) and the impedance is equal to the resistance.

In an a.c. circuit containing reactance only the phase angle is 90 degrees, with current lagging the voltage if the reactance is inductive and current leading the voltage if the reactance is capacitive. In either case, the impedance is equal to the reactance.

In an a.c. circuit containing both resistance and reactance the phase angle may have any value between zero and 90 degrees, with the current lagging the voltage if the reactance is inductive and leading the voltage if the reactance is capacitive. The impedance, in ohms, may be found from the equation above.

Series circuits with L, C and R — When inductance, capacity and resistance all are in series in an a.c. circuit, the voltage relations are a combination of the separate cases just considered. The voltage across each element will be proportional to the resistance or reactance of that element, since the current is the same through all. The voltages across the inductance and capacity are 180 degrees out of phase, since one leads the current by 90 degrees and the other lags the current by 90 degrees. This means that the two voltages tend to cancel; in fact, if the voltage across only the inductance and capacity in series is considered (leaving out the resistance), the total voltage is the *difference* between the two voltages.

This is shown by the vector diagram of Fig. 231. Since the angles of lead and lag are both 90 degrees, the reactance voltage lines are oppositely directed. The effect is exactly the same as though the *difference* between the two voltages (or reactances, in the impedance diagram) had been found first, and this difference then used as though it were a single voltage (or reactance). The net reactance in a series circuit is, hence, the difference between the inductive and capacitive reactances; or

$$X = X_L - X_C$$

If more than one inductance is present, the total inductive reactance is the sum of the individual reactances; similarly for capacitive reactances. Inductive reactance is conventionally taken as "positive" and capacitive reactance as "negative." With this convention, algebraic addition of all the reactances in a series circuit gives the total or net reactance of the circuit.

Parallel circuits with L, C and R — The equivalent resistance of a number of resistances in parallel in an a.c. circuit is found by the same rules as in the case of d.c. circuits (§ 2-6).

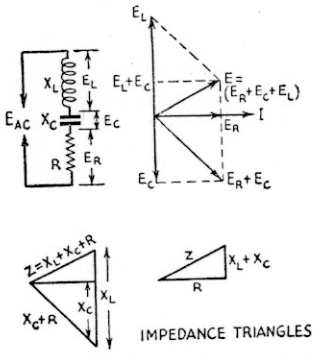

Fig. 231 — Current and voltage relationships in an a.c. circuit containing resistance, inductance and capacity in series. Step-by-step addition of voltage vectors is shown. The + signs are used in the algebraic sense, capacitive voltage or reactance being considered negative.

Parallel reactances *of the same kind* have an equivalent reactance given by a similar rule:

$$X = \frac{1}{\frac{1}{X_1} + \frac{1}{X_2} + \frac{1}{X_3} \cdots\cdots}$$

This formula cannot be used, however, if both inductive and capacitive reactance are in parallel.

When reactances and resistances are in parallel, the same voltage is applied to the various circuit elements. The current which flows is the *vector* sum of the currents in the various branches; that is, the phase of the currents with respect to the applied voltage must be taken into account in finding the total current. Fig. 232-A shows a resistance and inductance in parallel, with the corresponding vector diagram. The voltage is taken as the reference, since it is common to both branches. The current through the resistance is in phase with the voltage and coincides in direction with the voltage line. The current through the inductance lags the applied voltage by 90 degrees, hence is drawn at right angles downwards. The amplitudes of both currents are found by dividing the voltage by the resistance and reactance, respectively. The total current combines by the right-triangle rule; that is,

$$I = \sqrt{I_R^2 + I_X^2}$$

The impedance of the circuit is equal to E/I, so

$$Z = \frac{E}{\sqrt{I_R^2 + I_X^2}}$$

By assuming some convenient value for the applied voltage and then solving for the currents in the resistance and reactance, the values so found may be substituted in this equation to find the impedance of the circuit.

Resistance and capacity in parallel are shown in Fig. 232-B, with the corresponding vector diagram. Except for the fact that the current now leads the voltage, the relationships are the same as before and the total current and impedance can be found by using the same formulas.

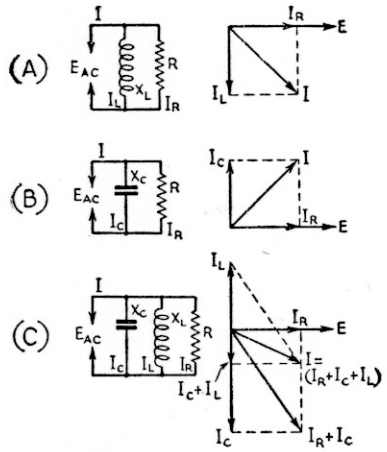

Fig. 232 — Parallel reactance and resistance in a.c. circuits. The various currents add vectorially as indicated.

When resistance, inductance and capacity are combined in parallel, as in Fig. 232-C, the vector diagram has the typical form shown. The currents in the inductance and capacity are 180 degrees out of phase, so that the total current through these elements (neglecting the resistance) is the *difference* between the two currents. Because of this, the current flowing in the line is always smaller than the largest reactive current, indicating that when inductance and capacity are connected in parallel the resultant impedance is larger than either of the individual reactances. The net reactive current may either lead or lag the applied voltage, depending upon whether the inductive or capacitive reactance is larger. The current taken by the parallel resistance is determined solely by the applied voltage. The total current and impedance of such a circuit can be found by the formulas used above, if for I_X the *difference* between the currents in the inductance and capacity is used.

With series-parallel circuits the solution becomes considerably more complicated, since the phase relationships in any parallel branch may not be either 90 degrees or zero. However, the majority of parallel circuits used in radio work can be solved by the rather simple approximate methods described in § 2-10.

Power factor — The power dissipated in an a.c. circuit containing both resistance and reactance is consumed entirely in the resistance, hence is equal to I^2R. However, the reactance is also effective in determining the current or voltage in the circuit, even though it consumes no energy. Hence the product of volts times amperes (which gives the power consumed in d.c. circuits) for the whole circuit may be several times the actual power used up. The ratio of power dissipated (watts) to the *volt-ampere* product is called the power factor of the circuit, or

$$Power\ factor = \frac{Watts}{Volt\text{-}amperes}$$

Distributed capacity and inductance — It should not be thought that the reactance of coils becomes infinitely high as the frequency is increased to a high value and, likewise, that the reactance of condensers becomes infinitely low at high frequencies. All coils have some capacity between turns, and the reactance of this capacity can become low enough at some high frequencies to tend to cancel the high reactance of the coil. Likewise, the leads and plates of condensers will have considerable inductance at very high frequencies, which will tend to offset the capacitive reactance of the condenser itself. For these reasons, coils for high-frequency work must be designed to have low "distributed" capacity and condensers must be made with short, heavy leads to have low inductance.

Units and instruments — The units used in a.c. circuits may be divided or multiplied to give convenient numerical values to different orders of magnitude, just as in d.c. circuits (§ 2-6). Because the rapidly reversing current is accompanied by similar reversals in the magnetic field, instruments used for measurement of d.c. (§ 2-6) will not operate on a.c. At low frequencies suitable instruments can be constructed by making the current produce both magnetic fields, one by means of a fixed coil and the other by the moving coil. Such instruments are used for measurement of either current or voltage. At radio frequencies this type of instrument is inaccurate because of distributed capacity and other effects, and the only reliable type of direct-reading instrument is the *thermocouple* ammeter or milliammeter. This is a power-operated device consisting of a resistance wire heated by the flow of r.f. current through it, to which is attached a thermocouple or pair of wires of dissimilar metals joined together and possessing the property of developing a small d.c. voltage between the terminals when heated. This voltage, which is proportional to the heat applied to the couple, is used to operate a d.c. instrument of ordinary design.

2-9 The Transformer

Principles — It has been shown in the preceding sections that, when an alternating voltage is applied to an inductance, the flow of alternating current through the coil causes an induced e.m.f. which is opposed to the applied e.m.f. The induced e.m.f. results from the varying magnetic field accompanying the flow of alternating current. If a second coil is brought into the same field, a similar e.m.f. likewise

will be induced in this coil. This induced e.m.f. may be used to force a current through a wire, resistance or other electrical device connected to the terminals of the second coil.

Two coils operating in this way are said to be *coupled*, and the pair of coils constitutes a *transformer*. The coil connected to the source of energy is called the *primary* coil, and the other is called the *secondary* coil. Energy may be taken from the secondary, being transferred from the primary through the medium of the varying magnetic field.

Voltage and turns ratio — For a given varying magnetic field, the voltage induced in a coil in the field will be proportional to the number of turns on the coil. If the two coils of a transformer are in the same field, it follows that the induced voltages will be proportional to the number of turns on each coil. In the case of the primary, or coil connected to the source of power, the induced voltage is practically equal to, and opposes, the applied voltage. Hence, for all practical purposes,

$$E_s = \frac{n_s}{n_p} E_p$$

where E_s is the secondary voltage, E_p is the primary voltage, and n_s and n_p are the number of turns on the secondary and primary, respectively. The ratio n_s/n_p is called the *turns ratio* of the transformer.

This relationship is true *only* when all the flux set up by the primary current cuts all the turns of the secondary. If some of the magnetic flux follows a path which does not make it cut the secondary turns then the secondary voltage is less than given by this formula, since this causes the rate of change of flux to be less in the secondary than in the primary. In general, the equation can be used only when both coils are wound on a closed core of high permeability, so that practically all of the flux can be confined to definite paths.

Types of transformers — The usefulness of the transformer lies in the fact that energy can be transferred from one circuit to another without direct connection, and in the process can be readily changed from one voltage level to another. Thus, if a device to be operated requires, for example, 120 volts and only a 440-volt source is available, a transformer can be used to change the source voltage to that required. The transformer, of course, can be used only on a.c., since no voltage will be induced in the secondary if the magnetic field is not changing. If d.c. is applied to the primary of a transformer, a voltage will be induced in the secondary only at the instant of closing or opening the primary circuit, since it is only at these times that the field is changing.

Transformers for use at radio frequencies are usually wound on nonmagnetic material ("air core") because the losses in ordinary iron cores are excessive at these frequencies. As a general rule, the equation given in the preceding paragraph does not apply to such transformers, because only a small part of the flux set up by the primary cuts the secondary turns. Even when special iron cores are used this statement is usually true of r.f. transformers, for reasons considered in § 2-11.

Transformers for use at power frequencies and audio frequencies are wound on iron cores, hence nearly all of the primary flux cuts the secondary turns. The turns-ratio equation can be used at these frequencies. The following discussion will be confined to such transformers.

Effect of secondary current — The primary current which has been discussed above is usually called the *magnetizing current* of the transformer. Like the current in any inductance, it lags the applied voltage by 90 degrees, neglecting the small energy losses in the resistance of the primary coil and in the iron core.

When current is drawn from the secondary winding, the secondary current sets up a magnetic field of its own in the core. The phase relationship between this field and that caused by the magnetizing current will depend upon the phase relationship between current and voltage in the secondary circuit. In every case there will be an effect upon the original field. To maintain the induced primary voltage equal to the applied voltage, however, the original field *must* be maintained. Consequently, the primary current must change in such a way that the effect of the field set up by the secondary current is completely canceled. This is accomplished when the primary draws an additional current that sets up a field exactly equal to the field set up by the secondary current, but which always opposes the secondary field. The additional primary current is thus 180 degrees out of phase with the secondary current. (This assumes that all the flux cuts both coils.) The total primary current is then the vector sum of the magnetizing current and this additional *load current*.

In rough calculations on transformers it is convenient to neglect the magnetizing current and to assume that the primary current is caused entirely by the secondary load. This is justifiable, because in any well-designed transformer the magnetizing current is quite small in comparison to the load current when the latter is near the rated value.

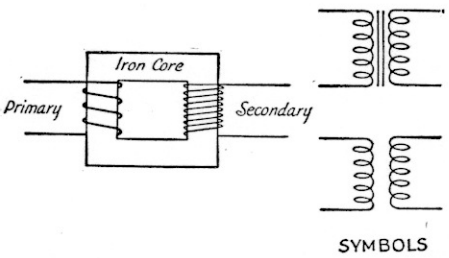

Fig. 233 — **The transformer. Power is transferred from the primary coil to the secondary by means of the magnetic field. The upper symbol at right indicates an iron-core transformer, the lower one an air-core transformer.**

For the fields set up by the primary and secondary load currents to be equal, the number of ampere turns in the primary must equal the number of ampere turns in the secondary. That is,

$$n_s I_s = n_p I_p$$

Hence,

$$I_p = \frac{n_s}{n_p} I_s$$

The load current in the primary for a given load current in the secondary is proportional to the turns ratio, secondary to primary. This is the opposite of the voltage relationships.

If the magnetizing current is neglected, the phase relationship between current and voltage in the primary circuit will be identical with that existing between the secondary current and voltage. This is because the applied voltage and induced voltage are 180 degrees out of phase, and the primary current and secondary current likewise are 180 degrees out of phase.

Energy relationships; efficiency — A transformer cannot create energy; it can only transfer and transform it. Hence, the power taken from the secondary cannot exceed that taken by the primary from the source of applied e.m.f. Since there is always some power loss in the resistance of the coils and in the iron core, the power taken from the source always will exceed that taken from the secondary. Thus,

$$P_o = n P_i$$

where P_o is the power taken from the secondary, P_i is the power input to the primary, and n is a factor which always is less than 1. It is called the *efficiency* of the transformer and is usually expressed as a percentage. The efficiency of small power transformers such as are used in radio receivers and transmitters may vary between about 60 per cent and 90 per cent, depending upon the size and design.

Leakage reactance — In a practical transformer not all of the magnetic flux is common to both windings, although in well-designed transformers the amount of flux which cuts one coil and not the other is only a small percentage of the total flux. This *leakage flux* acts in the same way as flux about any coil which is not coupled to another coil; that is, it gives rise to self-induction. Consequently, there is a small amount of *leakage inductance* associated with both windings of the transformer, but not common to them. Leakage inductance acts in exactly the same way as an equivalent amount of ordinary inductance inserted in series with the circuit. It has, therefore, a certain reactance, depending upon the amount of inductance and the frequency. This reactance is called *leakage reactance.*

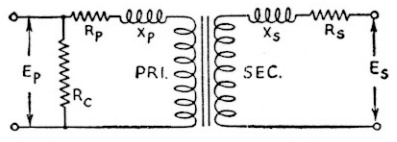

Fig. 234 — The equivalent circuit of a transformer includes the effects of leakage inductance and resistance of both primary and secondary windings. The resistance R_c is an equivalent resistance representing the constant core losses. Since these are comparatively small, their effect may be neglected in many approximate calculations.

In the primary the practical effect of leakage reactance is equivalent to a reduction in applied voltage, since the primary current flowing through the leakage reactance causes a voltage drop. This voltage drop increases with increasing primary current, hence it increases as more current is drawn from the secondary. The induced voltage consequently decreases, since the applied voltage (which the induced voltage must equal in the primary) has been effectively reduced. The secondary induced voltage also decreases proportionately. When current flows in the secondary circuit the secondary leakage reactance causes an additional voltage drop, which results in a further reduction in the voltage available from the secondary terminals. Thus, the greater the secondary current, the smaller the secondary terminal voltage becomes. The resistance of the primary and secondary windings of the transformer also causes voltage drops when current is flowing, and, although these voltage drops are not in phase with those caused by leakage reactance, together they result in a lower secondary voltage under load than is indicated by the turns ratio of the transformer. At power frequencies (60 cycles) the voltage at the secondary, with a reasonably well-designed transformer, should not drop more than about 10 per cent under load. The drop in voltage may be considerably more than this in a transformer operating at audio frequencies, however, since the leakage reactance in a transformer increases directly with the frequency.

Impedance ratio — In an ideal transformer having no losses or leakage reactance, the primary and secondary volt-amperes are equal; that is,

$$E_p I_p = E_s I_s$$

On this assumption, and by making use of the relationships between voltage, current and turns ratio previously given, it can be shown that

$$\frac{E_p}{I_p} = \frac{E_s}{I_s}\left(\frac{n_p}{n_s}\right)^2$$

Since $Z = E/I$, E_s/I_s is the impedance of the load on the secondary circuit, and E_p/I_p is the impedance of the loaded transformer as viewed from the line. The equation states that the impedance presented by the primary of the transformer to the line, or source of power, is equal to the secondary load impedance multiplied by the square of the primary-to-secondary turns ratio. This primary impedance is called the *reflected impedance* or *reflected load.* The reflected impedance will have the same phase angle as the secondary load impedance,

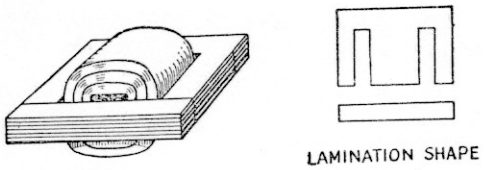

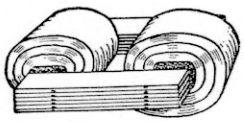

Fig. 235 — Two common types of transformer construction. Core pieces are interleaved to provide a continuous magnetic path with as low reluctance as possible.

as previously explained. If the secondary load is resistive only, then the input terminals of the transformer primary will appear to the source of e.m.f. as a pure resistance.

In practice there is always some leakage reactance and power loss in the transformer, so that the relationship above does not hold exactly. However, it gives results which are adequate for many practical cases. The *impedance ratio* of the transformer consequently is considered to be equal to the square of the turns ratio, both ratios being taken from the same winding to the other.

Impedance matching — Many devices require a specific value of load resistance (or impedance) for optimum operation. The resistance of the actual load which is to dissipate the power may differ widely from this value, hence the transformer, with its impedance-transforming properties, is frequently called upon to change the actual load to the desired value. This is called *impedance matching*. From the preceding paragraph,

$$\frac{n_s}{n_p} = \sqrt{\frac{Z_s}{Z_p}}$$

where n_s/n_p is the required secondary-to-primary turns ratio, Z_s is the impedance of the actual load, and Z_p is the impedance required for optimum operation of the device delivering the power.

Transformer construction — Transformers are generally built so that flux leakage is minimized insofar as possible. The magnetic path is laid out so that it is as short as possible, since this reduces its reluctance and hence the number of ampere-turns required for a given flux density, and also tends to minimize flux leakage. Two core shapes are in common use, as shown in Fig. 235. In the shell type both windings are placed on the inner leg, while in the core type the primary and secondary windings may be placed on separate legs, if desired. This is sometimes done when it is necessary to minimize capacity effects between the primary and secondary, or when there is a large difference of potential between primary and secondary.

Core material for small transformers is usually silicon steel, called "transformer iron." The core is built up of thin sheets, called *laminations*, insulated from each other (by a thin coating of shellac, for example) to prevent the flow of *eddy currents* which are induced in the iron at right angles to the direction of the field. If allowed to flow, these eddy currents would cause considerable loss of energy in overcoming the resistance of the core material. The separate laminations are overlapped, to make the magnetic path as continuous as possible and thus reduce leakage.

The number of turns required on the primary for a given applied e.m.f. is determined by the maximum permissible flux density in the type of core material used, the frequency, and the magnetomotive force required to force the flux through the iron. As a rough indication, windings of small power transformers frequently have about two turns per volt for a core of 1 square inch cross-section and a magnetic path 10 or 12 inches in length. A longer path or smaller cross section would require more turns per volt, and vice versa.

In most transformers the coils are wound in layers, with a thin sheet of paper insulation between each layer. Thicker insulation is used between separate coils and between the coils and the core.

In power transformers distributed capacity in the windings is of little consequence, but in audio-frequency transformers it may cause undesired resonance effects (see § 2-10 for a discussion of resonance). High-grade audio transformers often have special types of windings designed to minimize distributed capacity.

The autotransformer — The transformer principle can be utilized with only one winding instead of two, as shown in Fig. 236; the principles just discussed apply equally well. The *autotransformer* has the advantage that, since the line and load currents are out of phase, the section of the winding common to both circuits carries less current than the remainder of the coil. This advantage is not very marked unless the primary and secondary voltages do not differ very greatly, while it is frequently disadvantageous to have a direct connection between primary and secondary circuits. For these reasons, application of the autotransformer is usually limited to boosting or reducing the line voltage by a relatively small amount for purposes of voltage correction.

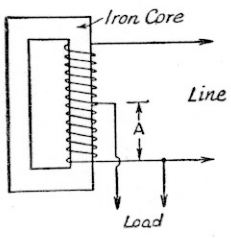

Fig. 236 — The auto-transformer is based on the transformer principle, but uses only one winding. The line and load currents in the common winding (A) flow in opposite directions, so that the resultant current is the difference between them. The voltage across A is proportional to the turns ratio.

¶ 2-10 Resonant Circuits

Principle of resonance — It has been shown (§ 2-8) that the inductive reactance of a coil and the capacitive reactance of a condenser are oppositely affected by frequency. In any series combination of inductance and capacitance, therefore, there is one particular frequency for which the inductive and capacitive reactances are equal. Since these two reactances cancel each other, the net reactance in the circuit becomes zero, leaving only the resistance to impede the flow of current. The frequency at which this occurs is known as the *resonant frequency* of the circuit and the circuit is said to be *in resonance* at that frequency, or *tuned* to that frequency.

Series circuits — The frequency at which a series circuit is resonant is that for which $X_L = X_C$. Substituting the formulas for inductive and capacitive reactance (§ 2-8) gives

$$2\pi fL = \frac{1}{2\pi fC}$$

Solving this equation for frequency gives

$$f = \frac{1}{2\pi\sqrt{LC}}$$

This equation is in the fundamental units — cycles per second, henrys and farads — and so, if fractional or multiple units are used, the appropriate factors must be inserted to change them to the fundamental units. A formula in units commonly used in radio circuits is

$$f = \frac{1}{2\pi\sqrt{LC}} \times 10^6$$

where f is the frequency in kilocycles per second, 2π is 6.28, L is the inductance in microhenrys (μh.), and C is the capacitance in micro-microfarads ($\mu\mu$fd.).

The resistance that may be present does not enter into the formula for resonant frequency.

When a constant a.c. voltage of variable frequency is applied, as shown in Fig. 237-A, the current flowing through such a circuit will be maximum at the resonant frequency. The magnitude of the current at resonance will be determined by the resistance in the circuit. The curves of Fig. 237 illustrate this, curve *a* being for low resistance and curves *b* and *c* being for increasingly greater resistances.

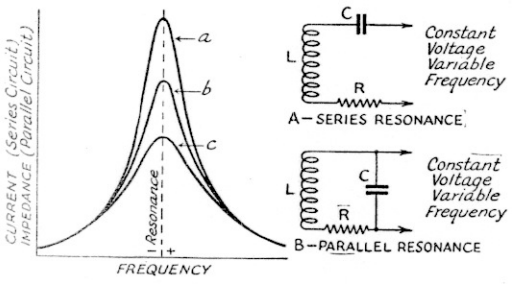

Fig. 237 — Characteristics of series-resonant and parallel-resonant circuits with variations in resistance, R.

In the circuits used at radio frequencies the reactance of either the coil or condenser at resonance is usually several times as large as the resistance of the circuit, although the *net* reactance is zero. As the applied frequency departs from resonance, say on the low-frequency side, the reactance of the condenser increases and that of the inductance decreases, so that the net reactance (which is the difference between the two) increases rather rapidly. When it becomes several times as high as the resistance, it becomes the chief factor in determining the amount of current flowing. Hence, for circuits having the same values of inductance and capacity but varying amounts of resistance, the resonance curves tend to coincide at frequencies somewhat removed from resonance. The three curves in the figure show this tendency.

Parallel circuits — The parallel-resonant circuit is illustrated in Fig. 237-B. This circuit also contains inductance, capacitance and resistance in series, but the voltage is applied in parallel with the combination instead of in series with it as in A. As explained in connection with parallel inductance and capacity (§ 2-8), the total current through such a combination is less than the current flowing in the branch having the smaller reactance. If the currents through the inductive and capacitive branches are equal in amplitude and exactly 180 degrees out of phase, the total current, called the *line* current, will be zero no matter how large the individual branch currents may be. The impedance ($Z = E/I$) of such a circuit, viewed from its parallel terminals, would be infinite. In practice the two currents will not be exactly 180 degrees out of phase, because there is always some resistance in one or both branches. This resistance makes the phase relationship between current and voltage less than 90 degrees in the branch containing it, hence the phase difference between the currents in the two branches is less than 180 degrees and the two currents will not cancel completely. However, the line current may be very small if the resistance is small compared to the reactance, and thus the parallel impedance at resonance may be very high.

As the applied frequency is increased or decreased from the resonant frequency, the reactance of one branch decreases and that of the other branch increases. The branch with the smaller reactance takes a larger current, if the applied voltage is constant, and that with the larger reactance takes a smaller current. As a result, the difference between the two currents becomes larger as the frequency is moved farther from resonance. Since the line current is the difference between the two currents, the current increases when the frequency moves away from resonance; in other words, the parallel impedance of the circuit decreases.

The variation of parallel impedance of a parallel-resonant circuit with frequency is illustrated by the same curves of Fig. 237 that show the variation in current with frequency for the series-resonant circuit. The parallel impedance at resonance increases as the series resistance is made smaller.

In the case of parallel circuits, resonance may be defined in three ways: the condition which gives maximum impedance, that which gives a power factor of 1 (impedance purely resistive), or (as in series circuits) when the inductive and capacitive reactances are equal. If the resistance is low, the resonant frequencies obtained on the three bases are practically identical. This condition usually is satisfied in radio work, so that the resonant frequency of a parallel circuit is generally computed by the series-resonance formula given above.

Resistance at high frequencies — At radio frequencies the resistance of a conductor may be considerably higher than its resistance to direct current or low-frequency a.c. This is because the magnetic field set up inside the wire tends to force the current to flow in the outer part of the wire, an effect which increases with frequency. At high radio frequencies this *skin effect* is so pronounced that practically all the current flows very near the surface of the conductor, thereby in effect reducing the cross-sectional area and hence increasing the resistance. For this reason low resistance can be achieved only by using conductors with large surface area, but, since the inner part of the conductor does not carry current, thin-walled tubing will serve just as well as solid wire of the same diameter.

A further effect occurs in coils at radio frequencies. The magnetic fields cause a concentration of current in certain parts of the conductors, again causing an effective decrease in the conductor size and raising the resistance. These effects, plus the effects of stray currents caused by distributed capacity (§ 2-8), raise the effective resistance of a coil at radio frequencies to many times the d.c. resistance of the wire.

Magnetic materials at high frequencies — At frequencies above the audio range (upper limit in the vicinity of 15,000 cycles) ordinary iron and steel cores are not useful for increasing the inductance of coils, although they are highly effective for this purpose at low frequencies. This is principally because losses from currents induced in the iron (eddy currents) increase to a prohibitive extent at high frequencies, since the induced current is proportional to frequency. Coils for radio-frequency purposes either are constructed without magnetic material (*air-core*) or have special types of iron cores particularly designed to reduce losses. Cores for radio-frequency use are made from finely divided iron of selected grades, held together with an insulating binding material in such a way that each iron particle is effectively insulated from the others. This prevents, or greatly reduces, the loss from eddy currents. The permeability of such a "powdered-iron" core is high enough, and the core losses are low enough, so that it is possible to construct an iron-core coil having lower effective resistance than an air-core coil of the same inductance. Although coils of this type now are used chiefly at the lower radio frequencies (below about 2 Mc.), practicable iron-core coils have been constructed for frequencies approaching the very-high-frequency range.

Sharpness of resonance — As the internal series resistance is increased the resonance curves become "flatter" for frequencies near the resonance frequency, as shown in Fig. 237. The relative sharpness of the resonance curve near resonance frequency is a measure of the *sharpness of tuning* or *selectivity* (ability to discriminate between voltages of different frequencies) in such circuits. This is an important consideration in tuned circuits for radio work.

Flywheel effect; Q — A resonant circuit may be compared to a flywheel in its behavior. Just as such a wheel will continue to revolve after it is no longer driven, so also will oscillations of electrical energy continue in a resonant circuit after the source of power is removed. The flywheel continues to revolve because of its stored mechanical energy; current flow continues in a resonant circuit by virtue of the energy stored in the magnetic field of the coil and the electric field of the condenser. When the applied power is shut off the energy surges back and forth between the coil and condenser, being first stored in the field of one, then released in the form of current flow, and then restored in the field of the other. Since there is always resistance present some of the energy is lost as heat in the resistance during each of these *oscillations* of energy, and eventually all the energy is so dissipated. The length of time the oscillations will continue is proportional to the ratio of the energy stored to that dissipated in each cycle of the oscillation. This ratio is called the Q (quality factor) of the circuit.

Since energy is stored by either the inductance or capacity and may be dissipated in either the inductive or capacitive branch of the circuit, a Q can be established for either the inductance or capacity alone as well as for the entire circuit. It can be shown that the energy stored is proportional to the reactance and that the energy dissipated is proportional to the resistance, so that, for either inductance or capacity associated with resistance,

$$Q = \frac{X}{R}$$

This relationship is useful in circuit problems.

In resonant circuits at frequencies below about 28 Mc. the internal resistance is practically wholly in the coil; condenser resistance may be neglected. Consequently, the Q of the circuit as a whole is determined by the Q of the coil, or its ratio of reactance to resistance. Coils

for frequencies below the very-high-frequency region may have Qs ranging from 100 to several hundred, depending upon their size and construction.

The sharpness of resonance of a tuned circuit is directly proportional to the Q of the circuit. As an indication of the effect of Q, the current in a series circuit drops to a little less than half its resonance value when the applied frequency is changed by an amount equal to $1/Q$ times the resonant frequency. The parallel impedance of a parallel circuit similarly decreases with change in frequency. For example, in a circuit having a Q of 100, changing the applied frequency by 1/100th of the resonant frequency will decrease the parallel impedance to less than half its value at resonance.

Damping, decrement — The rate at which current dies down in amplitude in a resonant circuit after the source of power has been removed is called the *decrement* or *damping* of the circuit. A circuit with high decrement (low Q) is said to be highly damped; one with low decrement (high Q) is lightly damped.

Voltage rise — When a voltage of the resonant frequency is inserted in series in a resonant circuit, the voltage which appears across either the coil or condenser is considerably higher than the applied voltage. This is because the current in the circuit is limited only by the resistance, and hence may have a relatively high value; however, the same current flows through the high reactances of the coil and condenser, and consequently causes large voltage drops (§ 2-8). As explained above, the reactances are of opposite types and hence the voltages are opposite in phase, so that the net voltage around the circuit is only that which is applied. The ratio of the reactive voltage to the applied voltage is proportional to the ratio of reactance to resistance, which is the Q of the circuit. Hence, the voltage across either the coil or condenser is equal to Q times the voltage inserted in series with the circuit.

Parallel-resonant circuit impedance — The parallel-resonant circuit offers pure resistance (its *resonant impedance*) between its terminals because the line current is practically in phase with the applied voltage. At frequencies off resonance the current increases through the branch having the lower reactance (and vice versa) so that the circuit becomes reactive, and the resistive component of the impedance decreases as shown in Fig. 238.

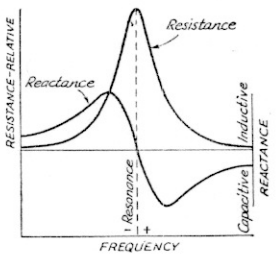

Fig. 238 — The impedance of a parallel-resonant resistance circuit is shown here separated into its reactance and resistance components. The parallel resistance of the circuit is equal to the parallel impedance at resonance.

If the circuit Q is 10 or more, the parallel impedance at resonance is given by the formula

$$Z_r = X^2/R = XQ$$

where X is the reactance of either the coil or the condenser and R is the internal resistance.

Q of loaded circuits — In many applications, particularly in receiving, the only power dissipated is that lost in the resistance of the resonant circuit itself. Hence the coil should be designed to have as high Q as possible. Since, within limits, increasing the number of turns raises the reactance faster than it raises the resistance, coils for such purposes are made with relatively large inductance for the frequency under consideration.

On the other hand, when the circuit delivers energy to a load, as in the case of the resonant circuits used in transmitters, the energy consumed in the circuit itself is usually negligible compared with that consumed by the load. The equivalent of such a circuit can be represented as shown in Fig. 239-A, where the parallel resistor represents the load to which power is delivered. If the power dissipated in the load is greater by 10 times or more than the power lost in the coil and condenser, the parallel impedance of the resonant circuit alone will be so high compared to the resistance of the load that the latter may be considered to determine the impedance of the combined circuit. (The parallel impedance of the tuned circuit alone is resistive at resonance, so that the impedance of the combined circuit may be calculated from the formula for resistances in parallel. If one of two resistances in parallel has 10 times the resistance of the other, the resultant resistance is practically equal to the smaller resistance.) The error will be small, therefore, if the losses in the tuned circuit alone are neglected. Then, since $Z = XQ$, the Q of a circuit loaded with a resistive impedance, Z, is

$$Q = \frac{Z}{X}$$

where Z is the load resistance connected across the circuit and X is the reactance of either the coil or condenser. Hence, for a given parallel impedance, the effective Q of the circuit including the load is inversely proportional to the reactance of either the coil or the condenser. A circuit loaded with a relatively low resistance (a few thousand ohms) must therefore have a large capacity and relatively small inductance to have reasonably high Q.

From the above it is evident that connecting a resistance in parallel with a resonant circuit decreases the impedance of the circuit. However, the reactances in the circuit are unchanged, hence the reduction in impedance is equivalent to a reduction in the Q of the circuit. The same reduction in impedance also could be brought about by increasing the *series*

resistance of the circuit. The *equivalent series resistance* introduced in a resonant circuit by an actual resistance connected in parallel is that value of resistance which, if added in

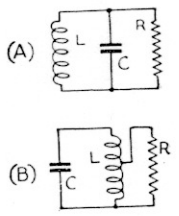

Fig. 239 — The equivalent circuit of a resonant circuit delivering power to a load. The resistor R represents the load resistance. At (B) the load is tapped across part of L, which by transformer action is equivalent to using a higher load resistance across the whole circuit.

series with the coil and condenser, would decrease the circuit Q to the same value it has when the parallel resistance is connected. When the resistance of the resonant circuit alone can be neglected, the equivalent resistance is

$$R = \frac{X^2}{Z}$$

the symbols having the same meaning as in the formula above.

The effect of a load of given resistance on the Q of the circuit can be changed by connecting the load across only part of the circuit. The most common method of accomplishing this is by tapping the load across part of the coil, as shown in Fig. 239-B. The smaller the portion of the coil across which the load is tapped, the less the loading on the circuit; in other words, tapping the load "down" is equivalent to connecting a higher value of load resistance across the whole circuit. This is similar in principle to impedance transformation with an iron-core transformer (§ 2-9). However, in the high-frequency resonant circuit the impedance ratio does not vary exactly as the square of the turn ratio, because all the magnetic flux lines do not cut every turn of the coil. A desired reflected impedance usually must be obtained by experimental adjustment.

L/C ratio — The formula for resonant frequency of a circuit shows that the same frequency always will be obtained so long as the *product* of L and C is constant. Within this limitation, it is evident that L can be large and C small, L small and C large, etc. The relation between the two for a fixed frequency is called the *L/C ratio*. A *high-C* circuit is one which has more capacity than "normal" for the frequency; a *low-C* circuit one which has less than normal capacity. These terms depend to a considerable extent upon the particular application considered, and have no exact numerical meaning.

Piezoelectricity — Properly ground plates or bars of quartz and certain other crystalline materials show a mechanical strain when subjected to an electric charge and, conversely, will show a difference in potential between two faces when subjected to mechanical stress. This characteristic is called the *piezoelectric* effect. A piezoelectric crystal is a mechanical vibrator electrically equivalent to a series-resonant circuit of very high Q, and can be used for many of the purposes for which ordinary resonant circuits are used.

2-11 Coupled Circuits

Energy transfer; loading — Two circuits are said to be *coupled* when energy can be transferred from one to the other. The circuit delivering energy is called the primary circuit; that receiving energy is called the secondary circuit. The energy may be practically all dissipated in the secondary circuit itself, as in receiver circuits, or the secondary may simply act as a medium through which the energy is transferred to a load resistance where it does work. In the latter case, the coupled circuits may act as a radio-frequency impedance-matching device (§ 2-9) where the matching can be accomplished by adjusting the loading on the secondary (§ 2-10) and by varying the coupling between the primary and secondary.

Coupling by a common circuit element — One method of coupling between two resonant circuits is to have some type of circuit element common to both circuits. The three variations of this type of coupling (often called *direct coupling*) shown at A, B and C of Fig. 240, utilize a common inductance, capacity and resistance, respectively. Current circulating in one LC branch flows through the common element (L_c, C_c, or R_c) and the voltage developed across this element causes current to flow in the other LC branch. The degree of coupling between the two circuits becomes greater as the reactance (or resistance) of the common element is increased in comparison to the remaining reactances in the two branches.

If both circuits are resonant to the same frequency, as is usually the case, the common impedance — reactance or resistance — required for maximum energy transfer is generally quite small compared to the other reactances in the circuits.

Capacity coupling — The circuit at D shows electrostatic coupling between two resonant circuits. The coupling increases as the capacity of C_c is made greater (reactance of C_c is decreased). When two resonant circuits are coupled by this means, the capacity required for maximum energy transfer is quite small if the Q of the secondary circuit is at all high. For example, if the parallel impedance of the secondary circuit is 100,000 ohms, the reactance of the coupling condenser need not be lower than 10,000 ohms or so for ample coupling. The corresponding capacity required is only a few micromicrofarads at high frequencies.

Inductive coupling — Fig. 240-E illustrates inductive coupling, or coupling by means of the magnetic field. A circuit of this type re-

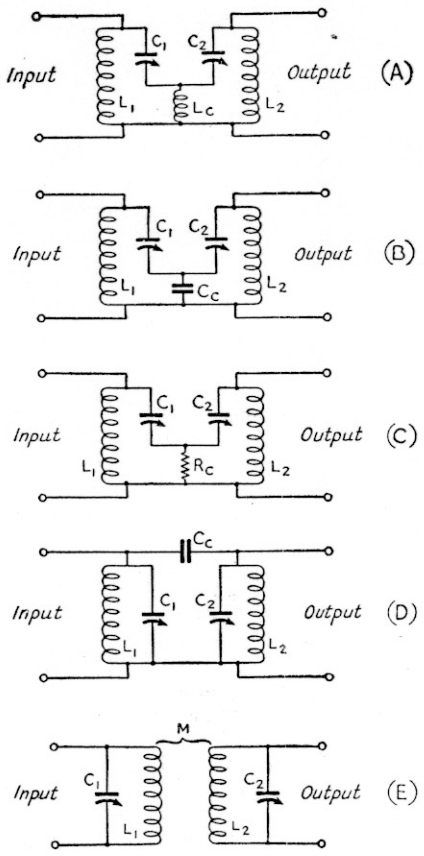

Fig. 240 — Basic methods of circuit coupling.

sembles the iron-core transformer (§ 2-9) but, because only a small percentage of the flux lines set up by one coil cut the turns of the other coil, the simple relationships between turns ratio, voltage ratio and impedance ratio in the iron-core transformer do not hold. To determine the operation of such circuits, it is necessary to take account of the mutual inductance (§ 2-5) between the coils.

Link coupling — A variation of inductive coupling, called *link coupling*, is shown in Fig. 241. This gives the effect of inductive coupling between two coils which may be so separated that they have no mutual inductance; the link may be considered simply as a means of providing the mutual inductance. Because mutual inductance between coil and link is involved at each end of the link, the total mutual inductance between two link-coupled circuits cannot be made as great as when normal inductive coupling is used. In practice, however, this ordinarily is not disadvantageous. Link coupling frequently is convenient in the design of equipment where inductive coupling would be impracticable because of constructional considerations.

The link coils generally have few turns compared to the resonant-circuit coils, since the coefficient of coupling is relatively independent of the number of turns on either coil.

Coefficient of coupling — The degree of coupling between two coils is a function of their mutual inductance and self-inductances:

$$k = \frac{M}{\sqrt{L_1 L_2}}$$

where k is called the *coefficient of coupling*. It is often expressed as a percentage. The coefficient of coupling cannot be greater than 1, and generally is much smaller in resonant circuits.

Inductively coupled circuits — Three types of circuits with inductive coupling are in general use. As shown in Fig. 242, one type has a tuned-secondary curcuit with an untuned-primary coil, the second a tuned-primary circuit and untuned-secondary coil, and the third uses tuned circuits in both the primary and secondary. The circuit at A is frequently used in receivers for coupling between amplifier tubes when the tuning of the circuit must be varied to respond to signals of different frequencies. Circuit B is used principally in transmitters, for coupling a radio-frequency amplifier to a resistive load. Circuit C is used for fixed-frequency amplification in receivers. The same circuit also is used in transmitters for transferring power to a load which has both reactance and resistance.

If the coupling between the primary and secondary is "tight" (coefficient of coupling large), the effect of inductive coupling in circuits A and B, Fig. 242, is much the same as though the circuit having the untuned coil were tapped on the tuned circuit (§ 2-10). Thus any resistance in the circuit to which the untuned coil is connected is coupled into the tuned circuit in proportion to the mutual inductance. This is equivalent to an increase in the series resistance of the tuned circuit, and its Q and selectivity are reduced (§ 2-10). The higher the coefficient of coupling, the lower the Q for a given value of resistance in the coupled circuit. These circuits may be used for impedance matching by adjustment of the coupling and of the number of turns in the untuned coil.

If the circuit to which the untuned coil is connected has reactance, a certain amount of reactance will be "coupled in" to the tuned circuit depending upon the amount of reactance present and the degree of coupling. The chief effect of this coupled reactance is to require readjustment of the tuning when the coupling is increased, if the tuned circuit has first been adjusted to resonance under conditions of very loose coupling.

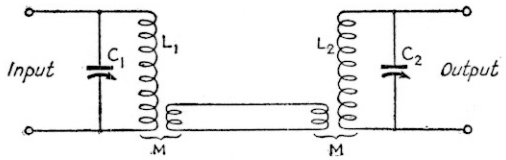

Fig. 241 — Link coupling. The mutual inductances at both ends of the link are equivalent to mutual inductance between the tuned circuits, and serve the same purpose.

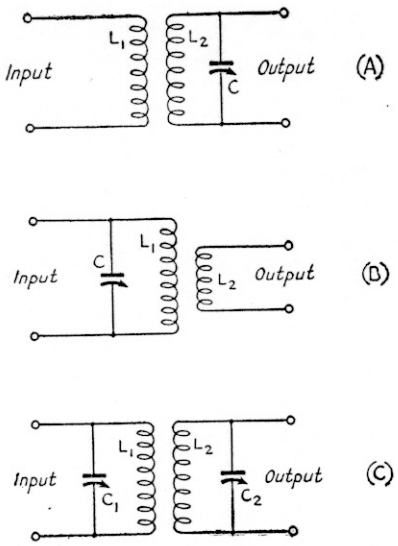

Fig. 242 — Types of inductively coupled circuits. In A and B, one circuit is tuned, the other untuned. C shows the method of coupling between two tuned circuits.

Coupled resonant circuits — The effect of a tuned-secondary circuit on a tuned primary is somewhat more complicated than in the simpler circuits just described. When the secondary is tuned to resonance with the applied frequency, its impedance is resistive only. If the primary also is tuned to resonance, the current flowing in the secondary circuit (caused by the induced voltage) will, in turn, induce a voltage in the primary which is opposite in phase to the voltage acting in series in the primary circuit. This opposing voltage reduces the effective primary voltage, and thus causes a reduction in primary current. Since the actual voltage *applied* in the primary circuit has not changed, the reduction in current can be looked upon as being caused by an increase in the resistance of the primary circuit. That is, the effect of coupling a resonant secondary to the primary is to increase the primary resistance. The resistance under consideration is the *series* resistance of the primary circuit, not the parallel impedance or resistance. The parallel resistance decreases, since the increase in series resistance reduces the Q of the primary circuit.

If the secondary circuit is not tuned to resonance, the voltage induced back in the primary by the secondary current will not be exactly out of phase with the voltage acting in the primary; in effect, reactance is coupled into the primary circuit. If the applied frequency is fixed and the secondary circuit tuning is being varied, this means that the primary circuit will have to be retuned to resonance each time the secondary tuning is changed.

If the two circuits are initially tuned to resonance at a given frequency and then the applied frequency is varied, both circuits become reactive at all frequencies off resonance. Under these conditions, the reactance coupled into the primary by the secondary retunes the primary circuit to a new resonant frequency. Thus, at some frequency off resonance, the primary current will be maximum, while at the actual resonant frequency the current will be smaller because of the resistance coupled in from the secondary at resonance. There is a point of maximum primary current both above and below the true resonant frequency.

These effects are almost negligible with very "loose" coupling (coefficient of coupling very small), but increase rapidly as the coupling increases. Because of them, the selectivity of a pair of coupled resonant circuits can be varied over a considerable range simply by changing the coupling between them. Typical curves showing the variation of selectivity are shown in Fig. 243, lettered in order of increasing coefficient of coupling. At loose coupling, A, the voltage across the secondary circuit (induced voltage multiplied by the Q of the secondary circuit) is less than the maximum possible because the induced voltage is small with loose coupling. As the coupling increases the secondary voltage also increases, until critical coupling, B, is reached. At still closer coupling the effect of the primary current "humps" causes the secondary voltage to show somewhat similar humps, while when the coupling is further increased the frequency separation of the humps becomes greater. Resonance curves such as those at C and D are called "flat-topped," because the output voltage is substantially constant over an appreciable frequency range. Such a characteristic is desirable in many receiver applications.

Critical coupling — It will be observed that maximum secondary voltage is obtained in the curve at B in Fig. 243. With tighter coupling the resonance curve tends to be double-peaked, but in no case is such a peak higher than that shown for curve B. The coupling at which the secondary voltage is maximum is known as *critical coupling*. With this coupling the resistance coupled into the primary circuit is equal to the resistance of the primary itself, corresponding to the condition of matched impedances. Hence, the energy transfer is maximum at critical coupling. The over-all selectivity of the coupled circuits at critical coupling

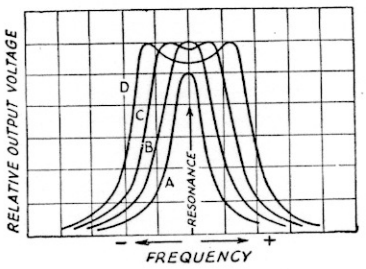

Fig. 243 — Showing the effect on the output voltage from the secondary circuit of changing the coefficient of coupling between two resonant circuits independently tuned to the same frequency. The input voltage is held constant in amplitude while the frequency is varied.

is intermediate between that obtainable with loose coupling and tight coupling. At very loose coupling, the selectivity of the system is very nearly equal to the product of the selectivities of the two circuits taken separately; that is, the effective Q of the circuit is equal to the product of the Qs of the primary and secondary.

Effect of circuit Q — Critical coupling is a function of the Qs of the two circuits taken independently. A higher coefficient of coupling is required to reach critical coupling when the Qs are low; if the Qs are high, as in receiving applications, a coupling coefficient of a few per cent may give critical coupling.

With loaded circuits it is not impossible for the Q to reach such low values that critical coupling cannot be obtained even with the highest practicable coefficient of coupling (coils as close physically as possible). In such case the only way to secure sufficient coupling is to increase the Q of one or both of the coupled circuits. This can be done either by decreasing the L/C ratio or by tapping the load down on the secondary coil (§ 2-10). One or the other of these methods often must be used with link coupling, because the maximum coefficient of coupling between two coils seldom runs higher than 50 or 60 per cent and the net coefficient is approximately equal to the products of the coefficients at each end of the link. If the load resistance is known beforehand, the circuits may be designed for a Q in the vicinity of 10 or so with assurance that sufficient coupling will be available; if unknown, the proper Qs can be determined by experiment.

Shielding — Frequently it is necessary to *prevent* coupling between two circuits which, for constructional reasons, must be physically near each other. Capacitive coupling may readily be prevented by enclosing one or both of the circuits in grounded low-resistance metallic containers, called *shields*. The electrostatic field from the circuit components does not penetrate the shield, because the lines of force are short-circuited (§ 2-3). A metallic plate called a *baffle shield*, inserted between two components, may suffice to prevent electrostatic coupling between them, since very little of the field tends to bend around such a shield if it is large enough to make the components electrostatically invisible to each other.

Similar metallic shielding is used at radio frequencies to prevent magnetic coupling. In this case the magnetic field induces a current (*eddy current*) in the shield, which in turn sets up its own magnetic field opposing the original field (§ 2-5). The induced current is proportional to the frequency and also to the conductivity of the shield, hence the shielding effect increases with frequency and with the conductivity and thickness of the shielding material. A closed shield is required for good magnetic shielding; in some cases separate shields, one about each coil, may be required. The baffle shield is rather ineffective for magnetic shielding, although it will give partial shielding if placed at right angles to the axes of, as well as between, the two coils to be shielded from each other.

Cancellation of part of the field of the coil reduces its inductance, and, since some energy is dissipated in the shield, the effective resistance of the coil is raised as well. Hence the Q of the coil is reduced. The effect of shielding on coil Q and inductance becomes less as the distance between the coil and shield is increased. The losses also decrease with an increase in the conductivity of the shield material. Copper and aluminum are satisfactory materials. The Q and inductance will not be greatly reduced if the spacing between the sides of the coil and the shield is at least half the coil diameter, and is not less than the coil diameter at the ends of the coil.

At audio frequencies the shielding container is made of magnetic material, preferably of high permeability (§ 2-5), to short-circuit the external flux about the coil to be shielded. A nonmagnetic shield is quite ineffective at these low frequencies because the induced current is small.

Filters — By suitable choice of circuit elements a coupling system may be designed to pass, without undue attenuation, all frequencies below and reject all frequencies above a certain value, called the *cut-off frequency*. Such a coupling system is called a *filter*, and in the above case is known as a *low-pass filter*.

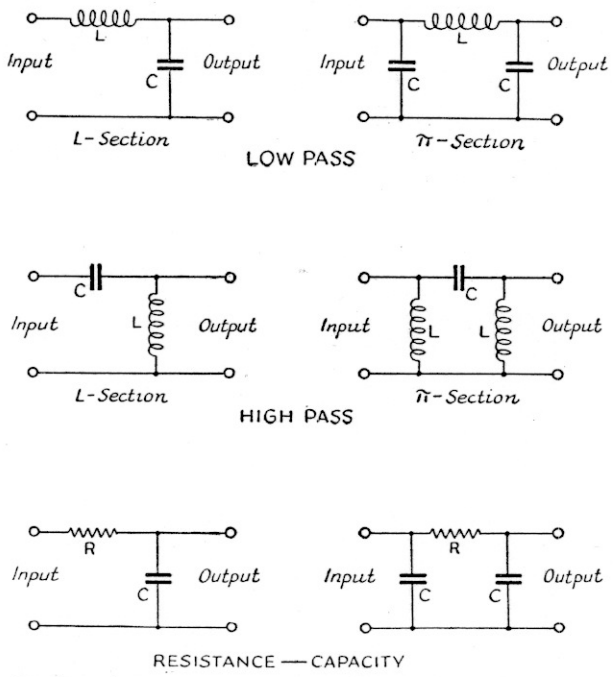

Fig. 244 — Examples of the various types of simple filter circuits.

If frequencies above the cut-off frequency are passed and those below attenuated, the filter is a *high-pass filter*. Simple filter circuits of both types are shown in Fig. 244. The fundamental circuit, from which more complex filters are constructed, is the *L-section*. Fig. 244 also shows *π-section* filters, constructed from the basic L-section, which are frequently encountered both in low-frequency and r.f. circuits. The proportions of L and C for proper operation of the filters depend upon the load resistance connected across the output terminals, L being larger and C smaller as the load resistance is increased.

A *band-pass* filter is one designed to pass without attenuation all frequencies between two selected cut-off frequencies, and to attenuate all frequencies outside these limits. The group of frequencies passed through the filter is called the *pass-band*. Two resonant circuits with greater than critical coupling represent a common form of band-pass filter.

The *resistance-capacity filter*, shown in Fig. 244, is used where both d.c. and a.c. are flowing through the circuit and it is desired to provide greater attenuation for the alternating current than the direct current. It is usually employed where the direct current has a low value so that the d.c. voltage drop is not excessive, or when a d.e. voltage drop actually is required. The time constant (§ 2-6) must be large compared to the time of one cycle of the lowest frequency to be attenuated. In determining the time constant, the resistance of the load must be included as well as that in the filter itself.

Bridge circuits — A *bridge circuit* is a device primarily used in making measurements of resistance, reactance or impedance (§ 2-8), although it has other applications in radio circuits. The fundamental form is shown in Fig. 245-A. It consists of four resistances (called *arms*) connected in series-parallel to a source of voltage, E, with a sensitive galvanometer, M, connected between the junctions of the series-connected pairs. When the equation

$$\frac{R_1}{R_2} = \frac{R_3}{R_4}$$

is satisfied there is no potential difference between points A and B, since the drop across R_2 equals that across R_4 and the drop across R_1 equals that across R_3. Under these conditions the bridge is said to be *balanced*, and no current flows through M. If R_3 is an unknown resistance and R_4 is a variable known resistance, R_3 can be found from the following equation after R_4 has been adjusted to balance the bridge (*null* indication on M):

$$R_3 = \frac{R_1}{R_2} R_4$$

R_1 and R_2 are known as the *ratio arms* of the bridge; the ratio of their resistances is usually adjustable (frequently in steps of 1, 10, 100, etc.), so that a single variable resistor, R_4, can serve as a standard for measuring widely different values of unknown resistance.

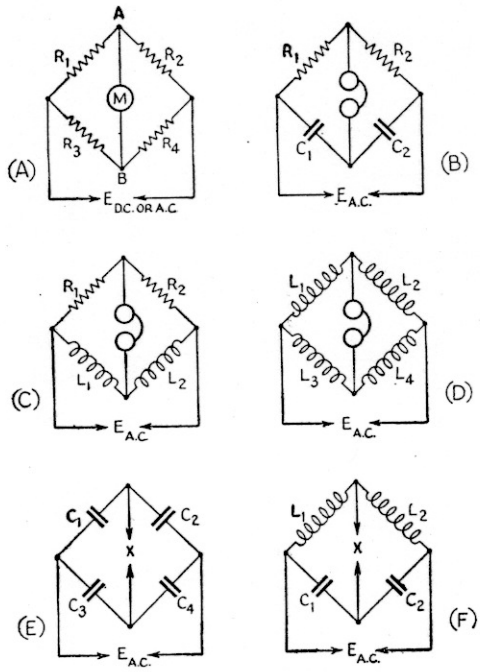

Fig. 245 — Bridge circuits utilizing resistance, inductance and capacity arms, both alone and in combination.

Bridges similarly can be formed with condensers, inductances and combinations of resistance with either. Typical simple arrangements are shown in Fig. 245. For measurements with alternating currents the bridge must not introduce phase shifts which would destroy the balance, hence similar impedances should be used in each branch, as shown in Fig. 245, and the Qs of the coils and condensers should be the same. When bridges are used at audio frequencies, a telephone headset is a good null indicator. The bridges at E and F are commonly used in r.f. neutralizing circuits (§ 4-7); the voltage from the source, E_{ac}, is balanced out at X.

2-12 Linear Circuits

Standing waves — If an electrical impulse is started along a wire, it will travel at approximately the speed of light until it reaches the end. If the end of the wire is open circuited, the impulse will be *reflected* at this point and will travel back again. When a high-frequency alternating voltage is applied to the wire a current will flow toward the open end, and reflection will occur continuously. If the wire is long enough so that time comparable to a half cycle or more is required for current to travel to the open end, the phase relations between the reflected current and outgoing current will vary along the wire, and at one point the two currents will be 180 degrees out of phase and at another in phase, with intermediate values between. Assuming negligible losses, this means that the resultant current will vary in amplitude from zero to a maximum value along the wire. Such a variation is called a *standing*

wave. The voltage along the wire also goes through standing waves, but reaches its maximum values where the current is minimum and vice versa.

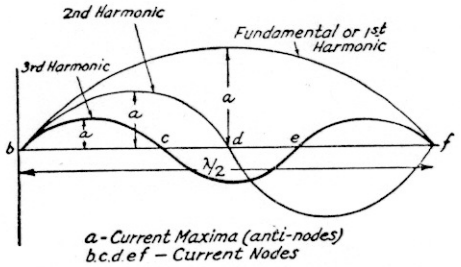

Fig. 246 — Standing-wave current distribution on a wire operating as an oscillatory circuit, at the fundamental, second harmonic and third harmonic frequencies.

Frequency and wavelength — It is possible to describe the constants of such line circuits in terms of inductance and capacitance, or inductance and capacitance per unit length, but it is more convenient to give them simply in terms of fundamental resonant frequency or of length. Since the velocity at which the current travels is 300,000 kilometers (186,000 miles) per second, the *wavelength*, or distance through which the current will travel in the time of one cycle, is

$$\lambda = \frac{300{,}000}{f_{kc.}}$$

where λ is the wavelength in meters and $f_{kc.}$ is the frequency in kilocycles. The lowest frequency at which the wire or line will be resonant is known as its *fundamental* frequency or wavelength. It is common to describe lines (or antennas, which have similar current and voltage distribution) as *half-wave*, *quarter-wave*, etc., for a certain frequency ("half-wave 7000-kc. antenna," for instance).

Wavelength is also used interchangeably with frequency in describing not only antennas but also tuned circuits, complete transmitters, receivers, etc. Thus, the terms "high-frequency receiver" and "short-wave receiver," or "75-meter fundamental antenna" and "4000-kilocycle fundamental antenna," are synonymous.

Harmonic resonance — Although a coil-condenser combination having lumped constants (capacitance and inductance) resonates only at one frequency, circuits such as antennas which contain distributed constants resonate readily at frequencies which are very nearly integral multiples of the fundamental frequency. These frequencies are, therefore, in *harmonic* relationship to the fundamental frequency, and hence are referred to as *harmonics* (§ 2-7). In radio practice the fundamental itself is called the *first harmonic*, the frequency twice the fundamental is called the *second harmonic*, and so on.

Fig. 246 illustrates the distribution of current on a wire for fundamental, second and third harmonic excitation. There is one point of maximum current with fundamental operation, two when operation is at the second harmonic, and three at the third harmonic; the number of current maxima corresponds to the order of the harmonic and the number of standing waves on the wire. As noted in the figure, the points of maximum current are called *anti-nodes* (also known as "loops") and the points of zero current are called *nodes*.

Radiation resistance — Since a line circuit has distributed inductance and capacity, current flow causes storage of energy in magnetic and electrostatic fields (§ 2-3, 2-5). At low frequencies practically all the energy so stored is returned to the wire during another part of the cycle (§ 2-8), but above 15,000 cycles or so (radio frequency) some escapes — is *radiated* — in the form of electromagnetic waves. Since energy radiated by a line or antenna is energy dissipated, insofar as the line is concerned, the energy loss can be considered to take place in an *equivalent resistance*. This equivalent resistance is known as *radiation resistance*.

Resonant-line circuits — The effective resistance of a resonant straight wire, such as an antenna, is considerable, because of the power radiated. The resonance curve of such a straight-line circuit is quite broad; in other words, its Q is relatively low. However, by folding the line, as suggested by Fig. 247, the fields about the adjacent sections largely cancel each other and very little radiation takes place. The radiation resistance is greatly reduced, and the line-type circuit can be made to have a very sharp resonance curve, or high Q.

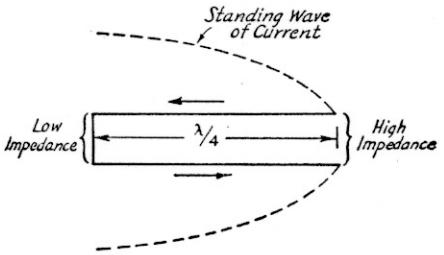

Fig. 247 — Standing wave and instantaneous current (arrows) conditions of a folded resonant-line circuit.

A circuit of this type will have a standing wave on it, as shown by the dashed-line of Fig. 247, with the instantaneous current flow in each wire opposite in direction to the flow in the other, as indicated by the arrows on the diagram. This opposite current flow accounts for the cancellation of radiation, since the fields about the two wires oppose each other. Furthermore, the impedance across the open ends of the line will be very high (thousands of ohms) while the impedance across the line near the closed end will be very low. This is because the current is low and the voltage is high at the open end of the line, but the current is high and the voltage low at the closed end.

A folded line may be made in the form of two concentric conductors, as shown in Fig. 248. The *concentric line* has even lower radiation resistance than the folded-wire line, since the

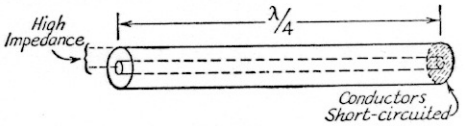

Fig. 248 — A concentric-line resonant circuit.

outer conductor acts as a shield. Standing waves exist but are confined to the outside of the inner conductor and the inside of the outer conductor, since skin effect prevents the currents from penetrating to the other sides. Thus such a line will have no radio-frequency potentials on its exposed surfaces. Because of the low radiation resistance and the relatively large conducting surfaces, such lines can be made to have much higher *Qs* than are attainable with coils and condensers. They are most applicable at very high frequencies (very short wavelengths) (§ 2-7), where the dimensions are small.

§ 2-13 Circuits with Superimposed Currents

Combined a.c. and d.c. — There are many practical instances of simultaneous flow of alternating and direct currents in a circuit. When this occurs there is a *pulsating* current, and it is said that an alternating current is *superimposed* on a direct current. As shown in Fig. 249, the maximum value is equal to the d.c. value plus the a.c. maximum, while the minimum value (on the negative a.c. peak) is the difference between the d.c. and the maximum a.c. values. The average value (§ 2-7) of the current is simply equal to the direct-current component alone. The effective value (§ 2-7) of the combination is equal to the square root of the sum of the effective a.c. squared and the d.c. squared:

$$I = \sqrt{I_{ac}^2 + I_{dc}^2}$$

where I_{ac} is the effective value of the a.c. component, I is the effective value of the combination, and I_{dc} is the average (d.c.) value of the combination.

Beats — If two or more alternating currents of different frequencies are present in a normal circuit they have no particular effect upon one another, and for this reason can be separated again at any time by the proper selective circuits. However, if two (or more) alternating currents of different frequencies are present in an element having unilateral or one-way current flow properties, not only will the two original frequencies be present in the output but also currents having frequencies equal to the sum, and difference, of the original frequencies. These sum and difference frequencies are called the *beat* frequencies. For example, if frequencies of 2000 and 3000 kc. are present in a normal circuit only those two frequencies exist, but if they are passed through a unilateral-element (such as a properly adjusted vacuum tube) there will be present in the output not only the two original frequencies of 2000 and 3000 kc. but also currents of 1000 (3000 − 2000) and 5000 (3000 + 2000) kc. Suitable circuits can be used to select the desired beat frequency.

By-passing — In combined circuits, it is frequently necessary to provide a low-impedance path for a.c. around, for instance, a source of d.c. voltage. This can be done by using a *by-pass condenser*, which will not pass direct current but will readily permit the flow of alternating current. The capacity of the condenser should be of such value that its reactance is low (of the order of 1/10th or less) compared to the a.c. impedance of the device being by-passed. The lower the reactance, the more effectively will the a.c. be confined to the desired path.

Similarly, alternating current can be prevented from flowing through a direct-current circuit to which it may be connected by inserting an inductance of high reactance (called a *choke coil*) between the two circuits. This will permit the d.c. to flow without hindrance, since the resistance of the choke coil may be made quite low, but will effectively prevent the a.c. from flowing where it is not wanted.

If both r.f. and low-frequency (audio or power) currents are present in a circuit, they may be confined to desired paths by similar means, since an inductance of high reactance for radio frequencies will have negligible reactance at low frequencies, while a condenser of low reactance at radio frequencies will have high reactance at low frequencies.

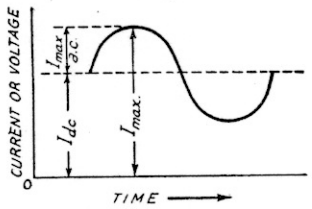

Fig. 249 — Pulsating current, composed of an alternating current superimposed on a direct current.

Grounds — The term "ground" is frequently met with in discussions of circuits. Normally it means the voltage reference point in the circuit. There may or may not be an actual connection to earth, but it is understood that a point in the circuit said to be at *ground potential* could be connected to earth without disturbing the operation of the circuit in any way. In direct-current circuits, the negative side generally is grounded. The ground symbol in circuit diagrams is used for convenience in indicating common connections between various parts of the circuit, as through a metal chassis, and, with respect to actual ground, usually has the meaning indicated above.

CHAPTER THREE

Vacuum Tubes

¶ 3-1 Diodes

Rectification — Practically all of the vacuum tubes used in radio work depend upon thermionic conduction (§ 2-4) for their operation. The simplest type of vacuum tube is that shown in Fig. 301. It has two elements, a cathode and a plate, and is called a *diode*. When heated by the "A" battery the cathode emits electrons, which are attracted to the plate if the plate is at a positive potential with respect to the cathode.

Because of the nature of thermionic conduction, the tube is a conductor in one direction only. If a source of alternating voltage is connected between the cathode and plate, then electrons will flow only on the positive half-cycles of alternating voltage; there will be no electron flow during the half cycle when the plate is negative with respect to the cathode. Thus the tube can be used as a *rectifier*, to change alternating current to pulsating direct current. This alternating current can be anything from the 60-cycle kind to the highest radio frequencies.

Rectification finds its chief applications in detecting radio signals and in power supplies. These are treated in Chapters Seven and Eight, respectively.

Characteristic curves — The performance of the tube can be reduced to easily understood terms by making use of tube *characteristic curves*. A typical characteristic curve for a diode is shown at the right, in Fig. 301. It shows the current flowing between plate and cathode with different d.c. voltages applied between the elements. The curve of Fig. 301 shows that, with fixed cathode temperature, the plate current increases as the voltage between cathode and plate is raised. For an actual tube the values of plate current and plate voltage would be plotted along their respective axes.

The power consumed in the tube is the product of the plate voltage multiplied by the plate current, just as in any d.c. circuit. In a vacuum tube this power is dissipated in heat developed in the plate and radiated to the bulb.

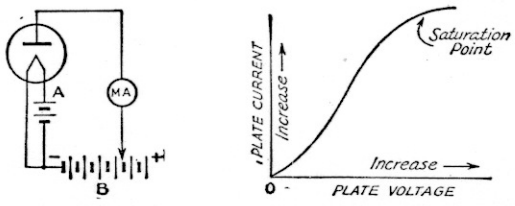

Fig. 301 — The diode or two-element tube and a typical characteristic curve showing plate current vs. voltage.

Space charge — With the cathode temperature fixed the total number of electrons emitted is always the same, regardless of the plate voltage. Fig. 301 shows, however, that less plate current will flow at low plate voltages than when the plate voltage is large. With low plate voltage, only those electrons nearest the plate are attracted to the plate. The electrons in the space near the cathode, being themselves negatively charged, tend to repel the similarly charged electrons leaving the cathode surface and cause them to fall back on the cathode. This is called the *space-charge* effect. As the plate voltage is raised more and more electrons are attracted to the plate, until finally the space charge effect is completely overcome. When this occurs all the electrons emitted by the cathode are attracted to the plate, and a further increase in plate voltage can cause no further increase in plate current. This condition is called *saturation*.

¶ 3-2 Triodes

Grid control — If a third element, called the *control grid*, or simply the *grid*, is inserted between the cathode and plate of the diode, the space-charge effect can be controlled. The tube then becomes a *triode* (three-element tube) and is useful for more things than rectification. The grid is usually in the form of an open spiral or mesh of fine wire. If the grid is connected externally to the cathode so that it is at the same potential as the cathode, and a steady voltage from a d.c. supply is then applied between the cathode and plate (the positive of the "B" supply is always connected to the plate), there will be a constant flow of electrons from cathode to plate through the openings of the grid, much as in the diode. However, if the grid is given a positive potential with respect to the cathode, the space charge will be partially neutralized and there will be an increase in plate current. If the grid is made negative with respect to the cathode, the space charge will be reinforced and the current will decrease.

This effect of grid voltage can be shown by curves in which plate current is plotted against grid voltage. At any given value of grid voltage the plate current will still depend upon the plate voltage, so if complete information about the tube is to be secured it is necessary to plot a *series* of curves taken with various values of plate voltage. Such a set of grid voltage vs. plate current curves, typical of a small receiving triode, is shown in Fig. 303.

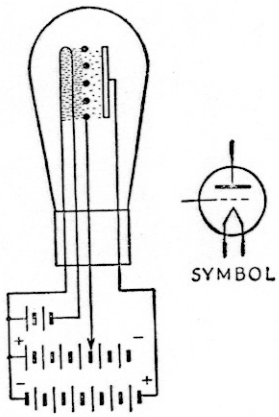

Fig. 302 — Illustrating the construction of an elementary triode vacuum tube, showing the filament, grid (with an end view of the grid wires) and plate. The relative density of the space charge is indicated roughly by the dot density. Battery symbols follow those of the usual schematic diagrams, while the schematic tube symbol is shown at the right.

So long as the grid has a negative potential with respect to the cathode, electrons emitted by the cathode are repelled (§ 2-3) from the grid, with the result that no current flows to the grid. Hence, under these conditions, the grid consumes no power. However, when the grid becomes positive with respect to the cathode, electrons are attracted to it, and a current flows to the grid; when this *grid current* flows, power is dissipated in the grid circuit.

In addition to the set of curves showing the relationship between grid voltage and plate current at various fixed values of plate voltage, two other sets of curves may be plotted to show the characteristics of a triode. These are the plate voltage vs. plate current characteristic, which shows the relationship between plate voltage and plate current for various fixed values of grid voltage, and the constant-current characteristic, which shows the relationship between plate voltage and grid voltage for various fixed values of plate current.

Amplification — The grid evidently acts as a valve to control the flow of plate current, and it is found that it has a much greater effect on plate current flow than does the plate voltage; that is, a small change in grid voltage is just as effective in bringing about a given change in plate current as is a large change in plate voltage.

The fact that a small voltage acting on the grid is equivalent to a large voltage acting on the plate indicates the possibility of *amplification* with the triode tube; that is, the generation of a large voltage by a small one, or the generation of a relatively large amount of power from a small amount. The many uses of the electronic tube nearly all are based upon this amplifying feature. The amplified power or voltage output from the tube is obtained, not from the tube itself, but from the source of e.m.f. connected between its plate and cathode. The tube simply *controls* the power from this source, changing it to the desired form.

To utilize the controlled power, a device for consuming it, or for transferring it to another circuit, must be connected in the plate circuit, since no particularly useful purpose would be served in having the current merely flow through the tube and the source of e.m.f. Such a device is called the *load*, and may be either a resistance or an impedance. The term "impedance" is frequently used even though the load may be purely resistive.

Amplification factor — The relative effect of the grid and plate voltages on the plate current is measured by the *amplification factor* of the tube, usually represented by the Greek letter μ. Amplification factor is defined as the ratio of the change in plate voltage required to produce a given change in plate current to the change in grid voltage required to produce the same plate-current change. Strictly speaking, very small changes in both grid and plate voltage must be used in determining the amplification factor, because the curves showing the relationship between plate voltage and plate current, and between grid voltage and plate current, are not perfectly straight, especially if the plate current is nearly zero. Hence the slope (§ 1-10) varies at different points along the curves, and different values will be obtained for the amplification factor as larger or smaller voltage differences are taken for the purpose of calculating it. The expression for amplification factor can be written:

$$\mu = \frac{\Delta E_p}{\Delta E_g}$$

where ΔE_p indicates a very small change in plate voltage and ΔE_g is the change in grid voltage producing the same plate current change. The symbol Δ (the Greek letter *delta*) indicates a small increment, or small change.

The amplification factor is simply a ratio, and has no unit.

Plate resistance — Since only a limited amount of plate current flows when a given voltage is applied between plate and cathode, it is evident that the plate-cathode circuit of the tube has resistance. However, there is no simple relationship between plate voltage and plate current, so that in general the plate circuit of the tube does not follow Ohm's Law. Under a given set of conditions the application

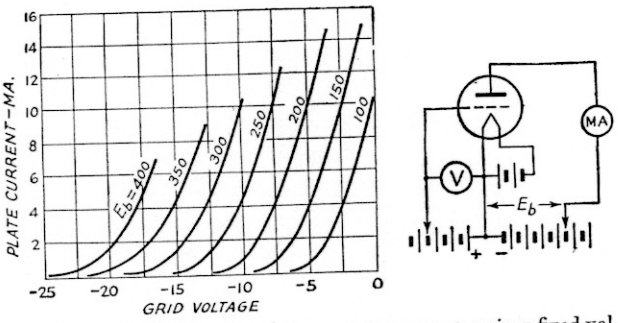

Fig. 303 — Grid voltage vs. plate current curves at various fixed values of plate voltage (E_b) for a typical small triode. Characteristic curves of this type can be taken by means of the circuit at the right.

of a given plate voltage will cause a certain plate current to flow, and if the plate voltage is divided by the plate current a "resistance" value will be obtained which frequently is called the "d.c. resistance" of the tube. This "d.c. resistance" will be different for every value of plate voltage and also for different values of grid voltage, since the plate current also depends upon the grid voltage when the plate voltage is fixed.

In applications of the vacuum tube, it is more important to know how the plate current changes with a *change* in plate voltage than it is to know the relationship between the actual values of plate current and plate voltage. The relationship between plate-current change and plate-voltage change determines the *a.c. plate resistance* of the tube. This resistance usually is designated r_p. It can be found from the plate voltage vs. plate current characteristic curves by finding the slope of the curve at the point considered. Hence

$$r_p = \frac{\Delta E_p}{\Delta I_p}$$

where ΔE_p is a small change in plate voltage and ΔI_p the corresponding small change in plate current, the grid voltage being fixed.

Plate resistance is expressed in ohms, since it is the ratio of voltage to current. The value of plate resistance will, in general, change with the particular voltages applied to the plate and grid. It depends as well upon the structure of the tube; low-μ tubes have relatively low plate resistance and high-μ tubes have high plate resistance.

Transconductance — The effect of grid voltage upon plate current is expressed by the *grid-plate transconductance* of the tube. Transconductance is a general term giving the relationship between the voltage applied to one electrode and the current which flows, as a result, in a second electrode. As in the previous two cases, it is defined as the *change* in current through the second electrode caused by a change in voltage on the first. Thus the grid-plate transconductance, commonly called the *mutual conductance*, is

$$g_m = \frac{\Delta I_p}{\Delta E_g}$$

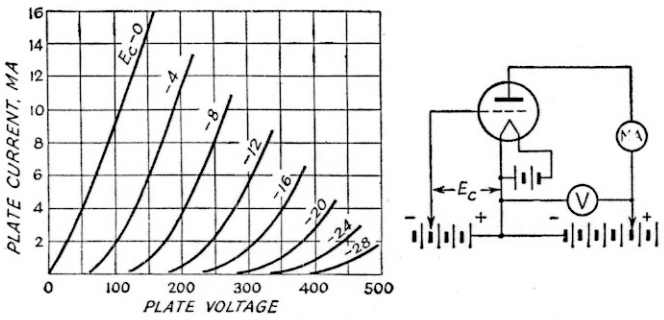

Fig. 304 — Plate voltage vs. plate current curves at various fixed values of negative grid voltage for the same triode as in curves in Fig. 303.

where g_m is the mutual conductance, ΔI_p the change in plate current, and ΔE_g the change in grid voltage, the plate voltage being fixed. As before, the sign Δ indicates that the changes must be small. Transconductance is measured in mhos, since it is the ratio of current to voltage. The unit usually employed in connection with vacuum tubes is the *micromho* (one millionth of a mho), because the conductances are small. By combining with the two preceding formulas, it can be shown that $g_m = \mu / r_p$.

The mutual conductance of a tube is a rough indication of its merit as an amplifier, since it includes the effects of both amplification factor and plate resistance. Its value varies with the voltages applied to the plate and grid. With the plate voltage fixed, the mutual conductance decreases when the grid is made increasingly negative with respect to the cathode. This characteristic frequently can be used to advantage in the control of amplification, since the amount of amplification can be varied over wide limits simply by adjusting the value of a steady voltage applied to the grid.

Static and dynamic curves — Curves of the type shown in Figs. 301 and 303 are called *static* curves. They show the current which flows when various voltages are applied directly to the tube electrodes. Another useful set of static curves is the "plate family," or plate voltage vs. plate current characteristic. A typical set of curves of this type is shown in Fig. 304.

A curve showing the relationship between grid voltage and plate current when a load resistance is connected in the plate circuit is called a *dynamic* characteristic curve. Such a curve includes the effect of the load resistance, and hence is more indicative of the performance of the tube as an amplifier. With a fixed value of plate-supply voltage the actual value of voltage between the plate and cathode of the tube will depend upon the amount of plate current flowing, since the plate current also flows through the load resistance and therefore results in a voltage drop which must be subtracted from the plate-supply voltage. The dynamic curve includes the effect of this voltage drop. Consequently, the plate current always is lower, for a given value of grid voltage and plate-supply voltage, with the load resistance in the circuit than it is without it.

Representative dynamic characteristics are shown in Fig. 305. These were taken with the same type of tube whose static curves are shown in Fig. 303. Different curves would be obtained with different values of plate-supply voltage, E_b; this set is for a plate-supply voltage of 300 volts. Note that increasing the value of the load resistance reduces the plate current at a given bias voltage, and also

that the curves are straighter with the higher values of load resistance. Zero plate current always occurs at the same value of negative grid bias, since at zero plate current there is no voltage drop in the load resistance and the full supply voltage is applied to the plate.

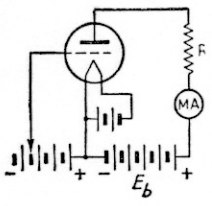

Fig. 306 shows how the plate current responds to an alternating voltage (*signal*) applied to the grid. If the plate current is to have the same waveshape as that of the signal, it is necessary to confine the operation to the straight section of the curve. To do this, it is necessary to select an *operating point* near the middle of the straight portion; this operating point is determined by the fixed voltage (*bias*) applied to the grid. The alternating signal voltage then adds to or subtracts from the grid bias, depending upon whether the instantaneous signal voltage is negative or positive with respect to the cathode, and causes a corresponding variation in plate current. The maximum departure of instantaneous grid voltage or plate current from the operating point is called the *swing*. The varying plate current flows through the load resistance, causing a varying voltage drop which constitutes the useful output voltage of the tube.

The point at which the plate current is reduced to zero is called the *cut-off point*. The value of negative grid voltage at which cut-off occurs depends upon the amplification factor of the tube and the plate voltage. It is approximately equal to the plate-supply voltage divided by the amplification factor.

Interelectrode capacities — Any pair of elements in a tube forms a miniature condenser (§ 2-3), and, although the capacities of these condensers may be only a few micromicrofarads or less, they must frequently be taken into account in vacuum-tube circuits. The capacity from grid to plate (*grid-plate capacity*) has an important effect in many applications. In triodes, the other capacities are the *grid-cathode* and *plate-cathode*. In multi-element tubes (§ 3-5), similar capacities exist between these and other electrodes. With screen-grid tubes, the terms "input" and "output" capacity mean, respectively, the capacity measured from grid to all other elements connected together and from plate to all other elements connected together. The same terms are used with triodes but are not so easily defined, since the effective capacities existing depend upon the operating conditions (§ 3-3).

Tube ratings — Specifications of suitable operating voltages and currents are called *tube ratings*. Ratings include proper values for filament or heater voltage and current, plate voltage and current, and similar operating specifications for other elements. An important rating in power tubes is the *maximum safe plate dissipation*, or the maximum power that can be dissipated continuously in heat on the plate (§ 3-1).

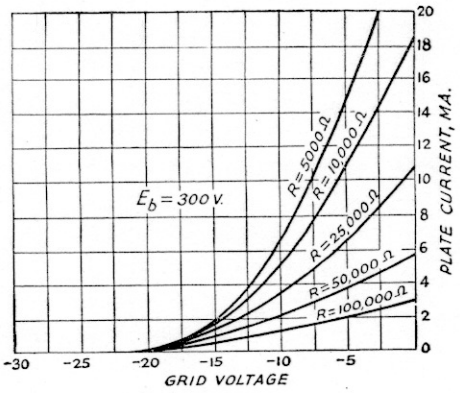

Fig. 305 — Dynamic characteristics of a small triode with various load resistances from 5,000 to 100,000 ohms.

¶ 3-3 Amplification

Principles — The operation of a simple amplifier, which was described briefly in the preceding section, is shown in more detail in Fig. 307. The load in the plate circuit is the resistor, R_p. For the sake of example, it is assumed that the plate-supply voltage is 300 volts, the negative grid bias is 5 volts, and the plate current at this bias when R_p is 50,000 ohms is 2 milliamperes (0.002 ampere). If no signal is applied to the grid circuit, the voltage drop in the load resistor is 50,000 × 0.002, or 100 volts, leaving 200 volts between the plate and cathode.

If a sine-wave signal having a peak value of 2 volts is applied in series with the bias voltage in the grid circuit, the instantaneous voltage at the grid will swing to − 3 volts at the instant the signal reaches its positive peak and to − 7 volts at the instant the signal reaches its negative peak. The maximum plate current will occur at the instant the grid voltage is − 3 volts and, as shown by the graph, will have a value of 2.65 milliamperes. The minimum plate current occurs at the instant the grid voltage is − 7 volts, and has a value of 1.35 ma. At intermediate values of grid voltage, intermediate plate-current values will occur. The instantaneous voltage between the plate and

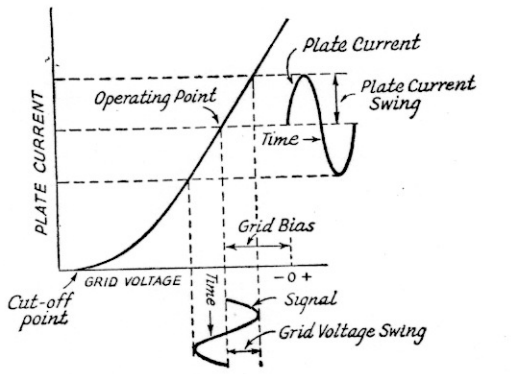

Fig. 306 — Behavior of the plate current of a vacuum tube in response to an alternating signal voltage superimposed on a steady negative grid voltage or bias.

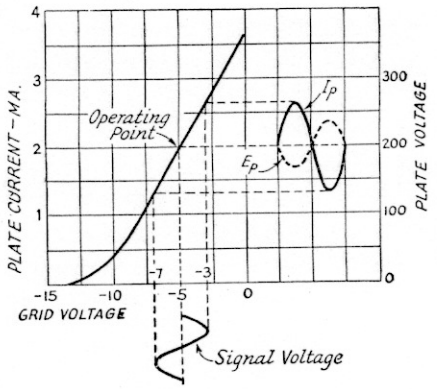

Fig. 307 — Amplifier operation. When the plate current varies in response to the signal applied to the grid, a varying voltage drop appears across the load, R_p, as shown by the dashed curve, E_p. I_p is the plate current.

cathode of the tube also is shown on the graph. When the plate current is maximum the instantaneous voltage drop in R_p is 50,000 × 0.00265 or 132.5 volts, and when the plate current is minimum the instantaneous voltage drop in R_p is 50,000 × 0.00135 or 67.5 volts. The actual voltage between plate and cathode is therefore the difference between the plate-supply voltage, 300 volts, and these voltage drops in the load resistance, or 167.5 and 232.5 volts, respectively.

The varying plate voltage is an a.c. voltage superimposed (§ 2-13) on the steady plate-cathode voltage of 200 volts, which was previously determined for no-signal conditions. The peak value of this a.c. output voltage is the difference between either the maximum or minimum plate-cathode voltage and the no-signal value of 200 volts. In the illustration this difference is 232.5 − 200 or 200 − 167.5, or 32.5 volts. Since the grid signal voltage has a peak value of 2 volts, the voltage amplification ratio of the amplifier is 32.5/2 or 16.25. That is, approximately 16 times as much voltage will be obtained from the plate circuit as is applied to the grid circuit.

Amplifiers in which the voltage output, rather than the power output, is the primary consideration are called *voltage amplifiers.*

It will be observed that only the alternating plate and grid voltages enter into the calculation of the amplification ratio. The d.c. plate and grid voltages are of course essential to the operation of the tube, since they set the operating point, but otherwise their presence may be ignored. This being the case, it is possible to show that the tube can be replaced by an *equivalent generator* which has an internal resistance equal to the a.c. plate resistance of the tube (§ 3-2) at the operating point chosen and which generates a voltage equal to the amplification factor of the tube multiplied by the signal voltage applied to the grid. The equivalent generator, together with the load resistance, R_p, is shown in Fig. 308. This simplification enables ready calculation of the amplification. If the generated voltage is μE_g, then the same current flows through r_p and R_p, and hence the voltage drop across R_p, which is the useful output voltage, is

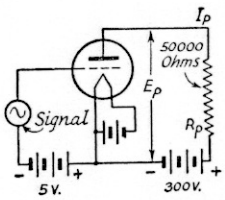

$$E_o = \mu E_g \frac{R_p}{r_p + R_p}$$

since R_p and r_p together constitute a voltage divider (§ 2-6). The voltage-amplification ratio is given by the output voltage divided by the input voltage, hence dividing the above expression by E_g gives the following formula for the amplification of the tube:

$$\text{Amplification} = \frac{\mu R_p}{r_p + R_p}$$

This expression shows that, to obtain a large voltage-amplification ratio, it is necessary to make the plate load resistance, R_p, large compared to the plate resistance, r_p, of the tube. The maximum possible amplification, obtained when R_p is infinitely larger than r_p, is equal to the μ of the tube. A tube with a large value of μ will, in general, give more voltage amplification than one with a medium or low value. However, the advantage of the high μ is less than might be expected, because a high-μ tube usually also has a correspondingly high value of r_p, so that a high value of load resistance must be used to realize an appreciable part of the possible amplification. This in turn not only requires the use of high values of plate-supply voltage, but has some further disadvantages to be described later.

Power in grid circuit — In the operation depicted in Fig. 306, the grid is always negative with respect to the cathode. If the peak signal voltage is larger than the bias voltage, the grid will be positive with respect to the cathode during part of the signal cycle. Grid current will flow during this time, and the signal source will be called upon to furnish power during the period while grid current is flowing. In many cases the signal source is not capable of furnishing appreciable power, so that care must be taken to avoid "driving the grid positive."

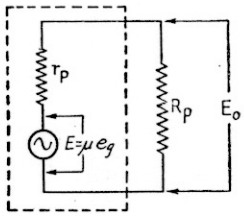

Fig. 308 — Equivalent circuit of the vacuum-tube amplifier. The tube is replaced by an equivalent generator having an internal resistance equal to the a.c. plate resistance of the vacuum tube.

When dealing with small signals the source of signal voltage frequently has high internal resistance, so that a considerable voltage drop occurs in the source itself whenever it is called upon to furnish grid current. Since this voltage drop occurs only during part of the cycle, the

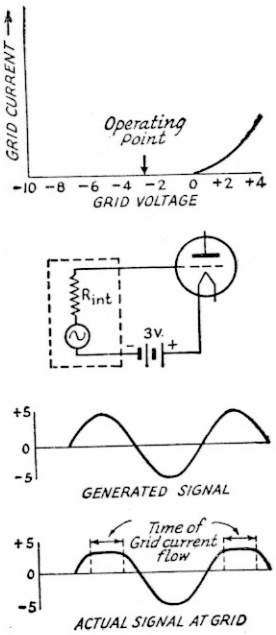

Fig. 309 — Distortion of applied signal because of grid-current flow. With the operating point at 3 volts negative bias, grid current will flow as shown by the curve whenever the applied signal voltage is more than 3 volts positive. If there is appreciable internal resistance, as indicated in the second drawing, there will be a voltage drop in the resistance whenever current is flowing but not during the period when no current flows. The signal will reach the grid unchanged so long as the instantaneous voltage is less than 3 volts positive, but the voltage at the grid will be less than the instantaneous voltage when the latter is above this figure. The shape of the negative half-cycle is unaltered.

voltage applied to the grid undergoes a change in waveshape because of the current flow. This is shown in Fig. 309, where a sine-wave signal is generated but, because of the internal resistance of the source, is *distorted* at the grid of the tube during the time when grid current flows.

If the internal resistance of the signal source is low, so that the internal voltage drop is negligible when current flows, this distortion does not occur. With such a source, it is possible to operate over a greater portion of the amplifier characteristic.

Harmonic distortion — If the operation of the tube is not confined to a straight or linear portion of the dynamic characteristic, the waveshape of the output voltage will not be exactly the same as that of the signal voltage. This is shown in Fig. 310, where the operating point is selected so that the signal voltage swings into the curved part of the characteristic. While the upper half-cycle of plate current reproduces the sine-wave shape of the positive half-cycle of signal voltage, the lower half-cycle of plate current is considerably distorted and bears little resemblance to the upper half-cycle of plate current.

As explained in § 2-7, a non-sinusoidal waveshape can be resolved into a number of sine-wave components or harmonics which are integral multiples of the lowest frequency present. Consequently, this type of distortion is known as *harmonic distortion*. Distortion resulting from grid-current flow, described in the preceding paragraph, also is harmonic distortion. Harmonic distortion from either or both causes may arise in the same amplifier.

Harmonic distortion may or may not be tolerable in an amplifier. At audio frequencies it is desirable to keep harmonic distortion to a minimum, but radio-frequency amplifiers are frequently operated in such a way that the r. f. wave is greatly distorted.

Frequency distortion — Another type of distortion, known as *frequency distortion*, occurs when the amplification varies with the frequency of the a.c. voltage applied to the grid circuit of the amplifier. It is not necessarily accompanied by harmonic distortion. It can be shown by a *frequency-response curve* or graph in which the relative amplification is plotted against frequency over the frequency range of interest.

Resistance-coupled amplifiers — An amplifier with a resistance load is known as a "resistance-coupled" amplifier. This type of amplifier is widely used for amplification at audio frequencies. A simplified circuit is shown in Fig. 311, where the amplifier is coupled to a following tube. Since all the power output of a resistance-coupled amplifier is consumed in the load resistor such amplifiers are used almost wholly for voltage amplification, usually working into still another amplifier.

A single amplifier is called a *stage* of amplification, and a number of amplifier stages in succession are said to be in *cascade*.

The purpose of the coupling condenser, C_c, is to transfer to the grid of the following tube the a.c. voltage developed across R_p, and to prevent the d.c. plate voltage on tube A from being applied to the grid of tube B. The grid resistor, R_g, transfers the bias voltage to the grid of tube B and prevents short-circuiting the a.c. voltage through the bias battery. Since no grid current flows, there is no d.c. voltage drop in R_g; consequently the full bias voltage is applied to the grid. In order to obtain the maximum a.c. voltage at the grid of tube B the reactance of the coupling condenser must be small compared to the resistance of R_g, so that most of the voltage will appear across R_g rather than across C. Also, the resistance of R_g must be large compared to R_p because, so far as the a.c. voltage developed in R_p is concerned, R_g is in parallel with R_p and therefore is just as much a part of R_p as though it were

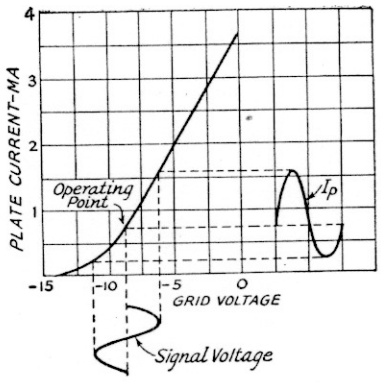

Fig. 310 — Harmonic distortion resulting from choice of an operating point on the curved part of the tube characteristic. The lower half-cycle of plate current does not have the same shape as the grid voltage causing it.

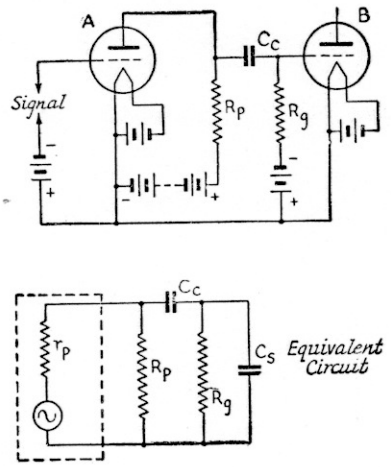

Fig. 311 — Typical resistance-coupled amplifier circuits.

connected directly in parallel with it. (The impedance of the plate-supply battery is assumed to be negligible, so that there is no a.c. voltage drop between the lower end of R_p and the common connection between the two tubes.) In practice the maximum usable value of R_g is limited to from 0.5 to about 2 megohms, depending upon the characteristics of the tube with which it is associated. If the value is made too high, stray electrons collecting on the grid may not "leak off" back to the cathode rapidly enough to prevent the accumulation of a negative charge on the grid. This is equivalent to an increase in the negative grid bias, and hence to a shift in the operating point.

The equivalent circuit of the amplifier now includes C_c, R_g, and a shunt capacity, C_s, which represents the input capacity of tube B and the plate-cathode capacity of tube A, together with such stray capacity as exists in the circuit. The reactance of C_s will depend upon the frequency of the voltage being amplified, and, since C_s is in parallel with R_p and R_g, it also becomes part of the load impedance for the amplifier. At low frequencies — below 1000 cycles or so — the reactance of C_s usually is so high that it has practically no effect on the amplification, but, since the reactance decreases at higher frequencies, it is found that the amplification drops off rapidly when the reactance of C_s becomes comparable to the resistance of R_p and R_g in parallel. To maintain the amplification at high frequencies, it is necessary that R_p be relatively small if C_s is large, or that C_s be small if R_p is large.

Under the best conditions, in practice C_s will be of the order of 15 $\mu\mu$fd. or more, while it is possible for it to reach values as high as a few hundred $\mu\mu$fd. The larger values are encountered when tube B is a high-μ triode, as described in a later paragraph. Even with a low value of shunt capacity, the shunt reactance will decrease to a comparatively low value at the upper limit of the audio-frequency range; a shunting capacity of 20 $\mu\mu$fd., for example, represents a reactance of about 0.5 megohm at 15,000 cycles, and hence is of the same order as R_p for the type of tubes with which such a low value of capacity would be associated. In order to secure the same amplification at high as at low frequencies, therefore, it is necessary to sacrifice low-frequency amplification by reducing the value of R_p to the point where the reactance of C_s at the highest frequency of interest is considerably larger than R_p.

At radio frequencies the reactance of C_s becomes so low that the amount of amplification it is possible to realize is negligible compared to that which can be obtained in the audio-frequency range. The resistance-coupled amplifier, therefore, is used principally for audio-frequency work.

Impedance-coupled amplifiers — If either the plate resistor or grid resistor (or both) in the amplifier described in the preceding paragraph is replaced by an inductance, the amplifier is said to be *impedance-coupled*. The inductance or impedance is commonly substituted for the plate load resistor, so that the usual circuit for such an amplifier is as given in Fig. 312.

Considering the operation of the tube from the standpoint of the equivalent circuit of Fig. 308, it is evident that a voltage drop would exist across a reactance of suitable value substituted for the indicated load resistance, R_p, so long as the output of the generator is alternating current. From the physical standpoint, any change in the current flowing through the inductance in Fig. 312 would cause a self-induced e.m.f. having a value proportional to the rate of change of current and to the inductance of the coil. Consequently, if an a.c. signal voltage is applied to the grid of the tube, the resultant variations in plate current cause a corresponding a.c. voltage to appear across the coil terminals. This induced voltage is the useful output voltage of the tube.

The amplitude of the output voltage can be calculated, knowing the μ and plate resistance of the tube and the impedance of the load, in much the same way as in the case of resistance coupling, except that the equation must be modified to take account of the fact that the phase relationship between current and voltage is not the same in an impedance as it is in a resistance. In practice, the plate load inductance is shunted by the tube and stray capacities of the circuit as well as by its own distributed capacity. Since the greatest amplification will

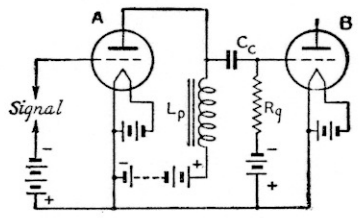

Fig. 312 — Impedance-coupled amplifier, in which an inductance, L_p, is used as the plate load impedance.

be secured when the load impedance is as high as possible, the coil usually is made to have sufficient inductance so that, in combination with these shunting capacities, the circuit as a whole will be parallel-resonant at some frequency near the middle of the audio-frequency range. Under these conditions the load impedance has its highest possible value, and is approximately resistive rather than reactive.

The equation for amplification with resistance coupling shows that, when R_p is several times the plate resistance, r_p, a further increase in R_p results in comparatively little increase in amplification. The load circuit of an impedance-coupled amplifier usually has an impedance value quite high in comparison to the plate resistance of the tube with which it is used, so that the load impedance can vary over a considerable range without much effect on the amplification. This gives the impedance-coupled amplifier an amplification vs. frequency characteristic which is fairly "flat" — that is, the amplification is practically constant with changes in frequency — over a considerable portion of the audio-frequency range. However, the performance of the impedance-coupled amplifier is not as good in this respect as that of a well-designed resistance-coupled amplifier.

If the impedance of the load circuit is high compared to the plate resistance of the tube, which will be the case if the tube is a low-μ triode and normal inductance values (a few hundred henrys) are used in the plate circuit, the amplification in the optimum frequency range will be practically equal to the μ of the tube. At very low frequencies the impedance decreases because of the decreasing reactance of the coil, while at very high frequencies the impedance again decreases because of the decreasing reactance of the shunt capacities. Consequently, the amplification drops off at both ends of the range, usually at a more rapid rate than in the case of resistance coupling.

The frequency-response characteristic of the impedance-coupled amplifier depends considerably upon the plate resistance of the tube. If impedance coupling is used with tubes of very high plate resistance, the response will be markedly greater at the resonant frequency than at frequencies either higher or lower.

Impedance coupling can be used at radio frequencies, since the inductance can be adjusted to resonate with the shunt capacities at practically any desired frequency.

Transformer-coupled amplifiers — The coupling impedance in Fig. 312 may be replaced by a transformer, connected as shown in Fig. 313. A.c. voltage is developed across the primary of the transformer in the same way as in the case of impedance coupling. The secondary of the transformer serves as a means for transferring the voltage to the grid of the following tube, and if the secondary has more turns than the primary the voltage across the secondary terminals will, in general, be larger than the voltage across the primary terminals.

As in the case of impedance coupling, the effective capacity shunting the primary of an audio-frequency transformer usually causes the primary circuit to be parallel-resonant at some frequency in the middle of the audio-frequency range. At the medium audio frequencies, therefore, the voltage across the primary is practically equal to the applied grid voltage multiplied by the μ of the tube. The voltage across the secondary will be the primary voltage multiplied by the secondary-to-primary turns ratio of the transformer, so that the total voltage amplification is μ times the turns ratio. The amplification at low frequencies depends upon the ratio of the primary reactance to the plate resistance of the tube, as in the case of impedance-coupled amplifiers.

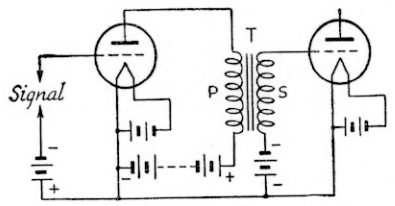

Fig. 313 — Transformer-coupled amplifier circuit.

At some high frequency, usually in the range 5000–10,000 cycles with ordinary transformers, the leakage inductance (§ 2-9) of the secondary becomes series resonant with the effective capacity shunting the secondary. At and near this resonant frequency the resonant rise in voltage may increase the amplification considerably, giving rise to a "peak" in the frequency-response curve of the amplifier. At frequencies above this resonance point amplification decreases rapidly, because as the reactance of the shunting capacity decreases it tends to act more and more as a short circuit across the secondary of the transformer. The relative height of the high-frequency peak depends principally upon the effective resistance of the secondary circuit. This effective resistance includes the actual resistance of the secondary coil and the "reflected" (§ 2-9) plate resistance of the tube, this resistance being in parallel with the primary of the transformer. Consequently, the height of the peak is affected by the tube with which the transformer is used. The peak can be reduced by connecting a resistance of the order of 0.25 to 1 megohm across the secondary of the transformer. While this helps make the frequency response curve more flat, it also reduces the amplification at medium and low frequencies.

Transformer coupling is most suitable for triodes of low or medium μ and having medium values of plate resistance. This is because the primary inductance required for good amplification at low frequencies is proportional to the plate resistance of the tube with which the transformer is to be used, and in practice it is difficult to obtain high primary inductance, a large secondary-to-primary turns ratio ("step-

up ratio"), and low distributed capacity in the windings all at the same time. Increasing the primary inductance usually means that the turns ratio must be reduced, because the increase in distributed capacity as the coils are made larger tends to bring the resonant peak down to a relatively low frequency unless the secondary inductance is decreased to compensate for the increase in capacity. The step-up ratio seldom is more than 3 to 1 in transformers designed for good frequency response.

Transformer coupling can be used at radio frequencies if the transformers are properly designed for the purpose. In such transformers either the primary or secondary (or both) is made resonant at the frequency to be used, so that maximum amplification will be secured.

Phase relations in plate and grid circuits — When the exciting voltage on the grid has its maximum positive instantaneous value, the plate current also is maximum (§ 3-2), so that the voltage drop across the resistance connected in the plate circuit of a resistance-coupled amplifier likewise has its greatest value. The actual instantaneous voltage between plate and cathode is therefore minimum at the same instant, because it is equal to the d.c. supply voltage (which is unvarying) minus the voltage drop across the load resistance. When the signal voltage is at its negative peak the plate current has its least value, with the result that the voltage drop in the load resistance is less than at any other part of the cycle. At this instant, therefore, the voltage between plate and cathode is maximum.

These variations in plate-cathode voltage constitute the a.c. output of the tube, superimposed on the mean or no-signal plate-cathode voltage. Since the alternating plate-cathode voltage is decreasing when the instantaneous grid voltage is increasing (becoming more positive with respect to the cathode), the output voltage is less than the mean value, or negative, when the signal voltage is positive. Likewise, when the signal voltage is negative the output voltage is positive, or greater than the mean value. In other words, the alternating plate voltage is 180 degrees out of phase with the alternating grid voltage. Thus there is a *phase reversal* through the amplifier. The relationships should become clear from the behavior of the signal voltage and E_p in Fig. 307.

The same phase relationship between signal and output voltages holds when the amplifier is impedance- or transformer-coupled, in the frequency region where the load acts like a parallel-resonant circuit. However, if the load is reactive the phase relationship is not exactly 180 degrees but depends upon the kind of reactance present and the relative amounts of reactance and resistance. (This is true also of the resistance-coupled amplifier at low frequencies where the reactance of the coupling condenser affects the amplification, or at high frequencies where the reactance of the shunting capacities becomes important.) Since the reactance varies with the applied signal frequency, the phase relationship between signal voltage and output voltage depends upon the frequency in such cases.

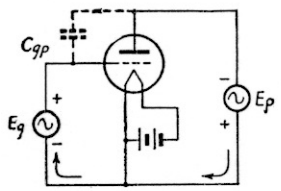

Fig. 314 — The a.c. voltage appearing between the grid and plate of the amplifier is the sum of the signal voltage and the output voltage, as shown by this simplified circuit. Instantaneous polarities are indicated.

Input capacity and resistance — When an alternating voltage is applied between the grid and cathode of an amplifier tube, an alternating current flows through the small condenser formed by these elements (§ 3-2) just as it would in any other condenser. Similarly, an alternating current also flows in the condenser formed by the grid and plate, since there is an alternating difference of potential between these elements. When the tube is amplifying, the alternating plate voltage and signal voltage are effectively applied in series across the grid-plate condenser, as indicated in Fig. 314. As described in the preceding paragraph, in the resistance-coupled amplifier the two voltages are out of phase with respect to the cathode, but inspection of the circuit shows that they are in phase so far as the grid-plate condenser is concerned. Consequently, the voltage applied to the grid-plate capacity is the sum of the alternating grid and plate voltages, or $E_g + E_p$. Since E_p is equal to AE_g, where A is the voltage amplification of the tube and circuit, the a.c. voltage between the grid and plate is $E_g (1 + A)$. The current, I, flowing in the grid-plate capacity is therefore $E_g (1 + A)$ divided by the reactance of the grid-plate condenser, and consequently is proportional to the grid-plate capacity.

The signal voltage must help in causing this relatively large current to flow, and, since the reactance as viewed from the input circuit is $X_g = E_g/I$, the input reactance becomes smaller as the current becomes larger. That is, the *effective* input capacity of the amplifier is increased when the tube is amplifying. From the above, the increase in input capacity is approximately proportional to the voltage amplification of the circuit and to the grid-plate capacity of the tube. The total input capacity is the sum of the grid-cathode capacity and this additional effective capacity. The total input capacity of an amplifier may reach values ranging from 50 to a few hundred micromicrofarads, if the voltage amplification is high and the grid-plate capacity relatively large. Both usually are true in a high-μ triode.

When the load is reactive the a.c. grid and plate voltages still act in series across the grid-plate condenser, but since they are not exactly

180 degrees out of phase with respect to the cathode they are not exactly in phase with respect to the grid-plate capacity. The lack of exact phase relationship indicates that resistance as well as capacity is introduced into the input circuit. Analysis shows that, when the reactance of the load circuit is capacitive, the resistance component is positive — that is, it represents a loss of power in the input circuit — and that when the load circuit has inductive reactance the resistance component is negative. Negative resistance indicates that power is being supplied to the grid circuit from the plate.

Feed-back — If some of the amplified energy in the plate circuit of an amplifier is coupled back into the grid circuit, the amplifier is said to have *feed-back*. If the voltage fed from the plate circuit to the grid circuit is in such phase that, when it is added to the signal voltage already existing, the sum of the two voltages is larger than the original signal voltage, the feed-back is said to be *positive*. Positive feed-back usually is called *regeneration*. If regeneration exists in a circuit the total amplification is increased because the feed-back increases the amplitude of the signal at the grid and this larger signal is amplified in the same ratio, giving a greater output voltage than would exist if the signal voltage alone were present in the grid circuit. Many types of circuits can be used to secure positive feed-back. A simple one is shown in Fig. 315. The feed-back coil, L, a third winding on the grid-circuit transformer, is connected in series with the primary of the transformer in the plate circuit, so that some of the amplified voltage appears across its terminals. This induces a voltage in the secondary, S, of the grid-circuit transformer which, if the winding directions of the two coils are correct, will increase the value of signal voltage applied to the grid.

Positive feed-back is accompanied by a tendency to give maximum amplification at only one frequency, since the feed-back voltage will tend to be highest at the frequency at which the original amplification is greatest. It therefore increases the selectivity of the amplifier, and hence is used chiefly where high gain and sharpness of resonance both are wanted.

If the phase of the voltage fed back to the grid circuit is such that the sum of the feed-back voltage and the original signal voltage is less than the latter alone, the feed-back is said to be *negative*. Negative feed-back frequently is called *degeneration*. In this case the total amplification is decreased, since the grid signal has been made smaller, and hence the amplified output voltage is smaller for a given original signal than it would be without feed-back.

The amount of voltage fed back will depend upon the actual amplification of the tube and circuit, and if the amplification ratio tends to change, as it may at the extreme high or low frequencies in the audio-frequency range, the feed-back voltage will be reduced when the amplification decreases. For example, suppose

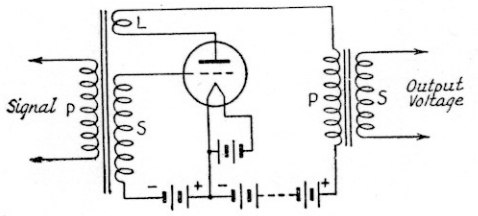

Fig. 315—An elementary form of feed-back circuit. The feed-back may be either positive or negative, depending upon how the coil L is connected in the circuit. This type of circuit illustrates the principle of feed-back, but it is not practical for use in an actual audio-frequency amplifier.

that an amplifier has a voltage gain of 20 and that it is delivering an output voltage of 50 volts. Without feed-back, the grid signal voltage required to produce 50 volts output is 50/20 or 2.5 volts. But suppose that 10 per cent of the output voltage (5 volts) is fed back to the grid circuit in opposite phase to the applied grid voltage. Then, since it is still necessary to have a 2.5-volt signal to produce 50 volts output, the applied voltage must be 2.5 + 5 or 7.5 volts. Now suppose that at some other frequency the voltage gain drops to 10. Then for the same 50-volt output a 5-volt signal is required, but since the feed-back voltage is still 5 volts the total required signal is now 10 volts. With feed-back the gain in the first case was 50/7.5 volts or 6.66 and in the second case 50/10 or 5, the gain in the second case being 75 per cent as high as in the first. Without feed-back the gain in the second case was 50 per cent as high as in the first. The effect of feed-back therefore is to make the resultant gain more uniform, despite the tendency of the amplifier itself to discriminate against certain frequencies.

Negative feed-back also tends to decrease harmonic distortion arising in the plate circuit of the amplifier. This distortion is present in the amplified output voltage, but not in the original signal voltage applied to the grid. The voltage fed back to the grid circuit contains the distortion but in opposite phase to the distortion components in the plate circuit, hence the two tend to cancel each other. For similar reasons, the over-all amplification is less dependent upon the value of load impedance used in the plate circuit; in fact, if a large amount of negative feed-back is used in an amplifier it is even possible to substitute tubes of rather widely different characteristics without much effect on the over-all performance.

Both positive and negative feed-back may be applied over several stages of an amplifier, rather than being applied directly from the plate circuit to the grid circuit of a single stage.

Power amplification — In the types of amplifiers previously described, the chief consideration was that of securing as much voltage gain as possible within the permissible limits of harmonic distortion and frequency response characteristic. Such amplifiers are principally used to furnish an amplified signal voltage,

which in turn can be supplied to a succeeding amplifier. If the succeeding amplifier is operated in such a way that its grid is never driven positive with respect to its cathode, grid current does not flow, and hence the power requirements are negligibly small. However, if an amplifier is used to actuate some power-consuming device, such as a loudspeaker or a succeeding amplifier in which it is permissible to drive the grid into the positive region, the primary consideration is that of obtaining the maximum power output consistent with the permissible distortion. In such a case the voltage at which the power is secured is of little consequence, since a transformer may be used to change the voltage to any desired value, within reasonable limits. Hence, the voltage gain of a power amplifier is of little importance.

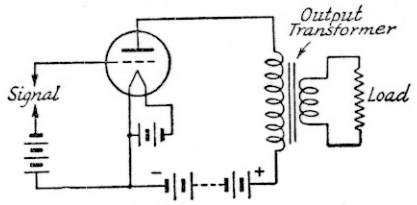

Fig. 316 — An elementary power-amplifier circuit in which the power-consuming load is coupled to the plate circuit through an impedance-matching transformer.

In power-amplifier operation the grid may or may not be driven into the positive region, depending upon the particular application. The present discussion will be confined to the triode amplifier operating without grid current; other types are considered in § 3-4. The principles upon which such a power amplifier operates are practically identical with those already described. The chief differences between a voltage amplifier and a power amplifier lie in the selection of tubes and in the choice of the value of load resistance. As previously described, if voltage gain is the primary consideration the load resistance should be as large as possible in comparison to the plate resistance of the tube. It can be shown that, in any electrical circuit, maximum *power* output is secured when the resistance of the load is made equal to the internal resistance of the source of power. This is true whether the power source is a battery, a generator or a vacuum tube. In the case of the vacuum tube the internal resistance is the plate resistance of the tube, so that for maximum power output the load resistance should be made equal to the plate resistance. However, when the tube is operated with such a low value of plate load resistance there is always considerable harmonic distortion, and it has been found that *optimum* power output, representing an acceptable compromise between distortion and the amount of power obtainable, is secured when the load resistance is approximately twice the plate resistance.

Power-amplifier circuits — The plate or output circuit of a power amplifier almost invariably is transformer-coupled to the power-consuming device or load with which it is associated. This is because the impedance of the desired load seldom is the proper value for obtaining optimum power output from the amplifier. Consequently, the load impedance must be changed to a value suitable for the plate circuit of the amplifier tube. This can be done by using transformers, as described in § 2-9.

A basic power-amplifier circuit is shown in Fig. 316. So long as the amplifier is operated entirely in the negative-grid region and no grid current flows, any of the previously described types of coupling may be used between the grid of the power amplifier and the preceding amplifier. If there is no preceding amplifier, the method of coupling will depend principally on the characteristics of the source of the signal.

In Fig. 316 the load is represented as a resistance. An actual load may have a reactance as well as a resistance component, but only the resistance will consume power (§ 2-8).

Power amplification ratio — The ratio of a.c. output power to the a.c. power consumed in the grid circuit (*driving power*) is called the *power amplification ratio* or simply *power amplification* of the amplifier. If the amplifier operates without grid current the a.c. power consumed in the grid circuit is negligibly small, so that the power amplification ratio of such an amplifier is extremely large. With other types of operation the power amplification ratio may be relatively small, as described in § 3-4.

Plate efficiency — The ratio of a.c. output power to the d.c. power supplied to the plate circuit of an amplifier is called the *plate efficiency* of the amplifier. It is usually expressed as a percentage:

$$\% \text{ plate efficiency} = \frac{P_o}{EI} \times 100$$

where P_o is the a.c. output power, E is the plate voltage and I is the plate current, the latter two being d.c. values.

The plate efficiency of amplifiers designed for minimum distortion and a high power amplification ratio (operation without grid current) is relatively low — of the order of 15 to 30 per cent. For minimum distortion the operation must be confined to the region where the waveshape of the alternating plate current is substantially identical with that of the signal on the grid, and, as previously explained, this requirement can be met only by limiting the plate-current variations (that is, the alternating component of plate current) to the straight portion of the dynamic grid voltage vs. plate current characteristic. Since with a given load resistance the power output is proportional to the square of the alternating component of plate current, it follows that limiting the plate-current variation also limits the power output in comparison to the d.c. plate power input.

Higher plate efficiency can be secured by increasing the alternating component of plate current, but this is accompanied by increased distortion. Special types of amplifiers have

been devised to compensate for this distortion, as described in the next section. In some applications, as in r.f. power amplification, the fact that the signal applied to the grid is greatly distorted is of no consequence, so that such amplifiers can have high plate efficiency.

Power sensitivity — The ratio of a.c. power output to alternating grid voltage is called the *power sensitivity* of an amplifier. It provides a convenient measure for comparing power tubes, especially those designed for audio-frequency amplification where the operation is to be without grid current, since it expresses the relationship between power output and the amount of signal voltage required to produce the power.

The term power sensitivity also is used in connection with radio-frequency power amplifiers, in which case it has the same meaning as power amplification ratio. A tube which delivers its rated output power with a relatively small amount of power consumed in the grid circuit is said to have high power sensitivity.

Parallel operation — When it is necessary to obtain more power output than one tube is capable of giving, two or more tubes may be connected in *parallel*. In this case the similar elements in all tubes are connected together. This method is shown in Fig. 317 for a transformer-coupled amplifier. The power output of a parallel stage will be in proportion to the number of tubes used; the exciting voltage required, however, is the same as for one tube.

If the amplifier operates in such a way as to consume power in the grid circuit, the grid power required also is in proportion to the number of tubes used.

Push-pull operation — An increase in power output can be secured by connecting two tubes in *push-pull*, the grids and plates of the two tubes being connected to opposite ends of the circuit as shown in Fig. 317. A "balanced" circuit, in which the cathode returns are made to the midpoint of the input and output devices, is necessary with push-pull operation. At any instant the ends of the secondary winding of the input transformer, T_1, will be at opposite potentials with respect to the cathode connection, so that the grid of one tube is swung positive at the same instant that the grid of the other is swung negative. Hence, in any push-pull-connected stage the voltages and currents of one tube are out of phase with those of the other tube. The plate current of one tube therefore is rising while the plate current of the other is falling, hence the name "push-pull." In push-pull operation the even-harmonic (second, fourth, etc.) distortion is cancelled in the symmetrical plate circuit, so that for the same power output the distortion will be less than with parallel operation.

The exciting voltage measured between the two grids must be twice that required for one tube. If the grids consume power, the driving power for the push-pull stage is twice that taken by either tube alone.

The decibel — The ratio of the power levels at two points in a circuit such as an amplifier can be expressed in terms of a unit called the *decibel*, abbreviated *db*. The number of decibels is 10 times the logarithm of the power ratio, or

$$db. = 10 \log \frac{P_1}{P_2}$$

The decibel is a particularly useful unit because it is logarithmic, and thus corresponds to the response of the human ear to sounds of varying loudness. One decibel is approximately the power ratio required to make a just noticeable difference in sound intensity. Within wide limits, changing the power by a given ratio produces the same apparent change in loudness regardless of the power level; thus if the power is doubled the increase is 3 db., or three steps of intensity; if it is doubled again the increase is again 3 db., or three further distinguishable steps. Successive amplifications expressed in decibels can be added to obtain the overall amplification.

A power loss also can be expressed in decibels. A decrease in power is indicated by a minus sign (e.g., − 7 db.), and an increase in power by a plus sign (e.g., + 4 db.). Negative and positive quantities can be added numerically. Zero db. indicates the reference power level, or a power ratio of 1.

Applications of amplification — The major uses of vacuum-tube amplifiers in radio work are for amplifying at audio and radio frequencies (§ 2-7). The audio-frequency amplifier generally is used to amplify without discrimination at all frequencies in a wide range (say from 100 to 3000 cycles for voice communication), and therefore is associated with nonresonant or untuned circuits which offer a uniform load over the desired range. The radio-frequency amplifier, on the other hand, generally is used to amplify selectively at a single radio

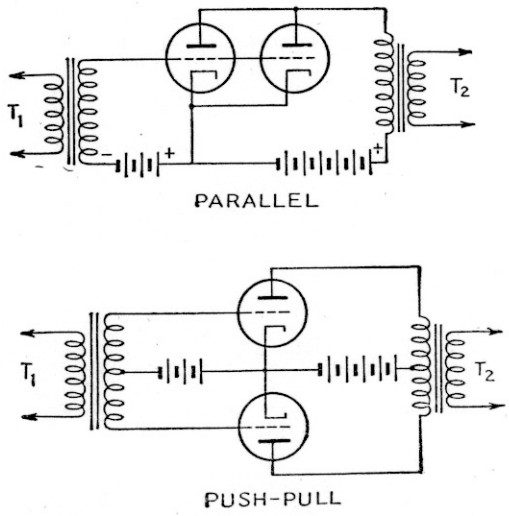

Fig. 317 — Parallel and push-pull amplifier circuits.

frequency, or over a small band of frequencies at most, and therefore is associated with resonant circuits tunable to the desired frequency.

An audio-frequency amplifier may be considered a *broad-band amplifier;* most radio-frequency amplifiers are designed to have relatively narrow bandwidths.

In audio circuits the power tube or output tube in the last stage usually is designed to deliver a considerable amount of audio power, while requiring but negligible power from the input or exciting signal. To get the alternating voltage (*grid swing*) required for the grid of such a tube, voltage amplifiers are used employing high-μ tubes which greatly increase the voltage amplitude of the signal. Voltage amplifiers are used in the radio-frequency stages of receivers as well as in audio amplifiers; power amplifiers are used in the radio-frequency stages of transmitters.

¶ 3-4 Classes of Amplifiers

Reason for classification. — It is convenient to divide amplifiers into groups according to the work they are intended to perform, as related to the operating conditions necessary to accomplish the purpose. This makes identification easy and obviates the necessity for giving a detailed description of the operation when *specific* operating data are not required.

Class A — An amplifier operated as shown in Fig. 306 or 307, in which the output waveshape is a faithful reproduction of the input waveshape, is known as a *Class-A* amplifier.

As generally used, the grid of a Class-A amplifier never is driven positive with respect to the cathode by the exciting signal, and never is driven so far negative that plate-current cut-off is reached. The plate current is constant both with and without grid excitation. The chief characteristics of the Class-A amplifier are low distortion, relatively low power output for a given size of tube, and a high power-amplification ratio. The plate efficiency is relatively low (§ 3-3).

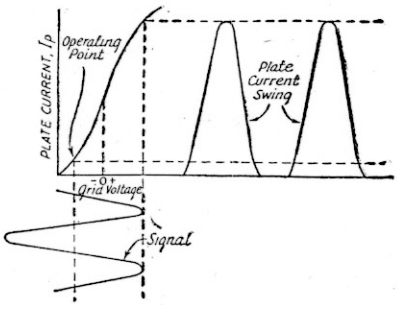

Fig. 318 — Class-B amplifier operation.

Class-A power amplifiers find application as output amplifiers in audio systems and as drivers for Class-B power amplifiers. Class-A voltage amplifiers are found in the stages preceding the power stage or stages in such applications, and as r.f. amplifiers in receivers.

Class B — The *Class-B* amplifier is primarily one in which the output current, or alternating component of the plate current, is proportional to the amplitude of the exciting grid voltage. Since power is proportional to the square of the current, the power output of a Class-B amplifier is proportional to the square of the exciting grid voltage.

The distinguishing operating condition in Class-B service is that the grid bias is set so that the plate current is relatively low without grid excitation; the exciting signal amplitude is made such that the entire linear portion of the tube's characteristic is used. Fig. 318 illustrates Class-B operation with the tube biased practically to cut-off. In this operating condition plate current flows only during the positive half-cycle of excitation voltage. No plate current flows during the negative swing of the excitation voltage. The shape of the plate current pulse is essentially the same as that of the positive swing of the signal voltage. Since the plate current is driven up toward the saturation point, it is usually necessary for the grid to be driven positive with respect to the cathode during part of the grid swing. Grid current flows, therefore, and the driving source must furnish power to supply the grid losses.

Class-B amplifiers are characterized by medium power output, medium plate efficiency (50 to 60 per cent at maximum signal), and a moderate ratio of power amplification. At radio frequencies they are used as *linear amplifiers* to raise the output power level in radiotelephone transmitters after modulation.

For Class-B audio-frequency amplification, two tubes must be used. The second tube, working alternately with the first, must be included so that both halves of the cycle will be present in the output. A typical method of arranging the tubes and circuit to achieve this is shown in Fig. 319. The signal is fed to a transformer, T_1, whose secondary is divided into two equal parts, with the tube grids connected to the outer terminals and the grid bias fed in at the center. A transformer, T_2, with a similarly divided primary, is connected to the plates of the tubes. When the signal voltage in the upper half of T_1 is positive with respect to the center connection (*center tap*), the upper tube draws plate current while the lower tube is idle; when the lower half of T_1 becomes positive, the lower tube draws plate current while the upper tube is idle. The corresponding voltages induced in the halves of the primary of T_2 combine in the secondary to produce an amplified reproduction of the signal waveshape.

The Class-B amplifier is capable of delivering much more power for a given tube size than a Class-A amplifier. While Class-B audio-frequency operation produces somewhat more distortion than Class-A, for most purposes the distortion is small enough to be neglected.

Class AB — The similarity between Fig. 319 and the ordinary push-pull amplifier circuit (Fig. 317) will be noted. Actually the circuits

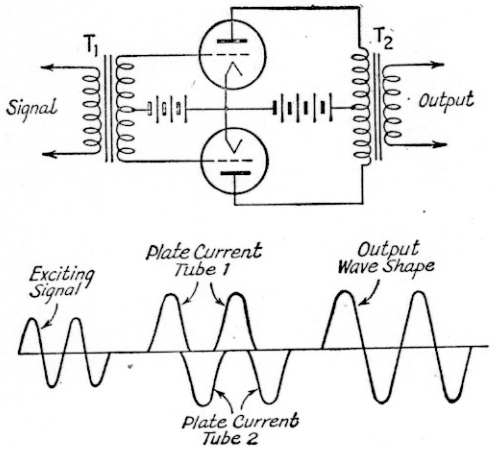

Fig. 319 — **The Class-B audio amplifier, showing how the outputs of the two tubes in push-pull are combined.**

are the same, the difference being in the method of operation. If the bias is adjusted so that the tubes draw a moderate value of plate current with no signal, the amplifier will operate Class A at low signal voltages and more nearly Class B at high signal voltages. An amplifier so operated is called *Class AB*. The advantages of this method are low distortion at moderate signal levels and high plate efficiency at high signal levels, making it possible to use relatively small tubes in audio power amplifiers.

A further distinction can be made between amplifiers which draw grid current and those which do not. The *Class-AB*$_1$ amplifier draws no grid current and thus consumes no power from the driving source. The *Class-AB*$_2$ amplifier draws grid current at higher signal levels, and power must be supplied to its grid circuit.

Class C — The *Class-C* amplifier is one operated so that the alternating component of the plate current is directly proportional to the plate voltage. The output power is therefore proportional to the square of the plate voltage. Other characteristics inherent to Class-C operation are high plate efficiency, high power output, and relatively low power amplification.

The grid bias for a Class-C amplifier is ordinarily set at a value at least twice that required for plate-current cut-off without grid excitation. As a result, plate current flows during only a fraction of the positive excitation cycle. The exciting signal should be of sufficient amplitude to drive the plate current to the saturation point, as shown in Fig. 320. Since the grid must be driven far into the positive region to cause saturation, considerable numbers of electrons are attracted to the grid at the peak of the cycle, robbing the plate of some that it would normally attract. This causes the droop at the upper bend of the characteristic, and also may cause the plate-current pulse to be indented at the top. The output wave-form is badly distorted, but at radio frequencies the distortion is largely eliminated by the flywheel effect of the tuned output circuit.

Although requiring considerable driving power, because of the relatively large grid swing and grid-current flow, the high plate efficiency (ordinarily 70 to 80 per cent) of the Class-C amplifier makes it an effective generator of radio-frequency power.

3-5 Multi-Element and Special-Purpose Tubes

Radio-frequency amplification — As described in the preceding section, the reactances of the grid-to-cathode and plate-to-cathode capacities (together with unavoidable stray capacities) in an amplifier circuit become very low at frequencies higher than the audio-frequency range. As a result, ordinary resistance, impedance or transformer coupling cannot be used at radio frequencies, because these capacities act as low-reactance by-passes across the input and output circuits; hence the total impedance in either the plate or grid circuit is too low for appreciable voltage to be developed.

When an amplifier is to be operated at radio frequencies it is necessary to use resonant circuits as loads, the circuits being tuned to the frequency to be amplified. Since such circuits consist of coils and condensers, the tube and stray capacities become part of the total tuning capacity and are thus made to serve a useful purpose. As described in § 2-10, the parallel impedance of a resonant circuit can reach quite high values when the Q is high. Values of parallel-resonant impedance suitable for effective amplification are readily obtainable with reasonably well-designed tuned circuits.

Since maximum parallel impedance, and consequently maximum amplification when resonant circuits are associated with an amplifier tube, is obtained when the circuit is exactly resonant at the applied frequency, it is necessary that the resonant circuit associated with the grid and that connected to the plate be tuned to the same frequency. In practice, it is difficult to maintain exact tuning over a

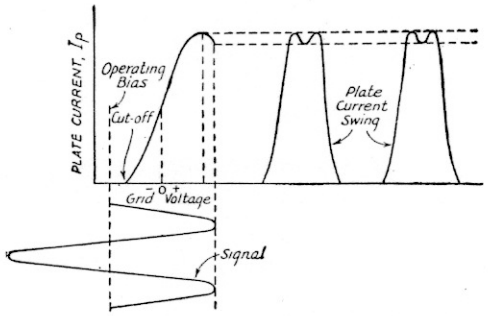

Fig. 320 — **Class-C amplifier operation.**

period of time. If the amplifier tube is a triode, its input circuit will have a negative-resistance characteristic (§ 3-3) when the plate-circuit load has inductive reactance. If the resonant circuit associated with the plate is tuned slightly to the high-frequency side of exact

resonance, the circuit will have inductive reactance, and energy will be transferred from the plate circuit to the grid circuit. Such a circuit has positive feed-back, or is regenerative. If enough energy is so transferred (very little is required) the tube will generate a self-sustaining radio-frequency current, in which case it is said to be *oscillating*. When oscillation commences the circuit ceases to operate as an amplifier of incoming signals, since it is generating a signal of its own.

Oscillation can be prevented by using special circuits with triode amplifiers, but in practice these are unsatisfactory in receiving applications. Since the feed-back arises because of the grid-plate capacity of the tube, it can be eliminated by eliminating the grid-plate capacity.

Screen-grid tubes — The grid-plate capacity can be eliminated, or at least reduced to a negligible value, by inserting a second grid between the control grid and the plate as indicated in Fig. 321. The second grid, called the *screen grid* or *shield grid*, acts as an electrostatic shield (§ 2-11) between the control grid and plate. It is made in the form of a grid or coarse screen rather than as a solid metal sheet, so that electrons can pass through it to the plate; a solid shield would entirely prevent the flow of plate current. The screen grid is connected to the cathode through a path, such as a by-pass condenser, which has low impedance at the radio frequency being amplified. The electric lines of force from the plate practically all terminate on the screen grid, very little of the field getting through to the control grid; similarly, the field set up by the control grid does not penetrate past the screen grid. Thus there is no common field between the control grid and plate, and hence no capacity between these two tube elements.

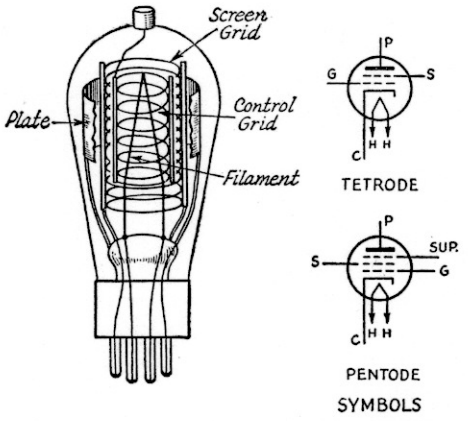

Fig. 321 — Representative arrangement of elements in a screen-grid tube, with front part of plate and screen-grid cut away. The screen grid usually is made longer than either the control grid or plate, so that the shielding will be as effective as possible. In this drawing the control grid connection is made through a cap on the top of the tube, thus eliminating the capacity which would exist between the plate and grid lead wires if both passed through the base. Some modern tubes which have both leads going through the base use special shielding and construction to eliminate capacity. Symbols for pentode and tetrode tubes: H, heater; C, cathode; G, control grid; P, plate; S, screen grid; Sup., suppressor grid.

Since the electric field from the plate does not penetrate into the region occupied by the control grid, which is the region in which most of the space charge is concentrated, the plate is unable to exert an attraction upon the electrons in this region. Consequently, the plate voltage cannot control the flow of plate current as it does in a triode. In order to get electrons to the plate, it is necessary to apply a positive potential (with respect to the cathode) to the screen. The screen then attracts electrons much in the same way as does the plate in a triode tube. In traveling toward the screen the electrons acquire velocity, and most of them shoot between the screen wires into the region where the field from the plate is effective. Those that pass through and are attracted to the plate constitute the plate current of the tube. A certain proportion of the electrons do strike the screen, however, with the result that a current also flows to the screen grid. In a properly designed screen-grid tube, the screen current will be low compared to the plate current with normal operating potentials.

A tube with two grids, such as is shown in Fig. 321, is a *tetrode*, or four-element tube.

Secondary emission — When an electron traveling at appreciable velocity through a tube strikes the plate it dislodges other electrons, which "splash" from the plate into the interelement space. This phenomenon is called *secondary emission*. In the triode, ordinarily operated with the grid negative with respect to cathode, these secondary electrons are repelled back into the plate and cause no disturbance. In the screen-grid tube, however, the positively charged screen grid attracts the secondary electrons, causing a reverse current to flow between screen and plate. The effect is particularly marked when the plate and screen potentials are nearly equal, which may be the case during the part of the a.c. cycle when the instantaneous plate current is large and the plate voltage low (§ 3-3).

Pentode tubes — To overcome the effects of secondary emission, a third grid, called the *suppressor grid*, may be inserted between the screen and plate. This grid is connected directly to the cathode, and repels the relatively low-velocity secondary electrons back to the plate without obstructing to any appreciable extent the regular plate-current flow.

Although the screen grid in either the tetrode or pentode greatly reduces the influence of the plate upon plate-current flow, it is quite obvious that the control grid still can control the plate current in essentially the same way that it does in a triode, since the control grid is still in the space-charge region. Consequently, the grid-plate transconductance (or mutual conductance) of a tetrode or pentode will be of the same order of value as in a triode of corresponding structure. On the other hand, since

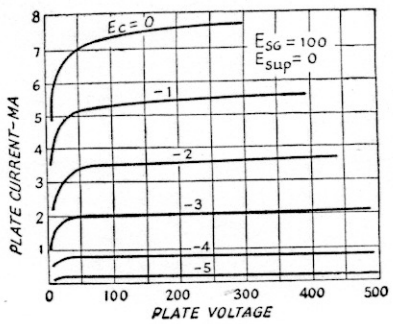

Fig. 322 — Plate voltage vs. plate current curves of a small receiving pentode. Plate voltage has relatively little effect on plate current. In taking these curves, the screen-grid voltage, E_{sg}, was 100 volts and suppressor-grid voltage, E_{sup}, zero with respect to the cathode.

the plate voltage has very little effect on the plate-current flow, both the amplification factor and plate resistance of a pentode or tetrode are very high, as is apparent from the definitions of these constants (§ 3-2). In small pentodes used for receiving purposes the amplification factor is usually of the order of 1000, while the plate resistance may be from 0.5 to 1 or more megohms. Because of the high plate resistance, the actual voltage amplification possible with a pentode is very much less than the large amplification factor might indicate. In resistance-coupled audio-frequency amplifiers, a voltage amplication or gain of 100 to 200 is typical.

A typical set of characteristic curves for a small pentode is shown in Fig. 322. That the plate voltage has little effect on the plate current is indicated by the fact that the curves are practically horizontal once the plate voltage is high enough to prevent the electrons in the space between the screen grid and the plate from being attracted back to the screen. The plate potential at which this occurs is considerably less than the screen potential, because the electrons entering the space have considerable velocity and hence tend to move away from the screen despite the fact that the screen has a positive charge.

In addition to their applications as radio-frequency amplifiers, pentode or tetrode screen grid tubes also can be constructed for audio-frequency power amplification. In tubes designed for this purpose the shielding effect of the screen grid is not so important; the chief function of the screen is to serve as an accelerator of the electrons, so that large values of plate current can be drawn at relatively low plate voltages. Such tubes have quite high power sensitivity (§ 3-4) compared to triodes of the same power output, because the amplification factor of an equivalent triode has to be made quite low in order to secure the same plate current at the same plate voltage. Because of the low μ, the triode requires a relatively large signal voltage for full output, hence has low power sensitivity. The harmonic distortion is somewhat greater with pentodes and tetrodes than with triodes, however.

Beam tubes — A "beam"-type tube is a tetrode with grids so constructed as to form the electrons traveling to the plate into concentrated beams, resulting in higher plate efficiency and power sensitivity. Suitable design also overcomes the effects of secondary emission without the necessity for a suppressor grid. Tubes constructed on the beam principle are used in receivers as both r.f. and audio amplifiers, and are built in larger sizes for transmitting circuits.

Variable-mu and sharp cut-off tubes — Receiving screen-grid tetrodes and pentodes for radio-frequency voltage amplification are made in two types, known as *sharp cut-off* and *variable-μ* or "super-control" types. In the sharp cut-off type the amplification factor is practically constant regardless of grid bias, while in the variable-μ type the amplification factor decreases as the negative bias is increased. The purpose of this design is to permit the tube to handle large signal voltages without distortion in circuits in which grid-bias control is used to vary the mutual conductance, and hence the amplification.

The way in which mutual conductance varies with grid bias in two typical small receiving pentodes, similar except in that one is a sharp cut-off type and the other a variable-μ type, is shown in Fig. 323. Obviously, the variable-μ type can handle a much larger signal voltage without swinging either beyond zero grid bias or plate-current cut-off (zero mutual conductance) if the bias is properly chosen.

Multi-purpose types — A number of combination types of tubes have been constructed to perform multiple functions, particularly in receiver circuits. Among the simplest are full-wave rectifiers, combining two diodes in one envelope, and twin triodes, consisting of two triodes in one bulb for Class-B audio amplification. More complex types include duplex-diode triodes, duplex-diode pentodes, converters and mixers (for superheterodyne receivers), combination power tubes and rectifiers, and so on. In many cases the nature of the tube structure can be identified by the name.

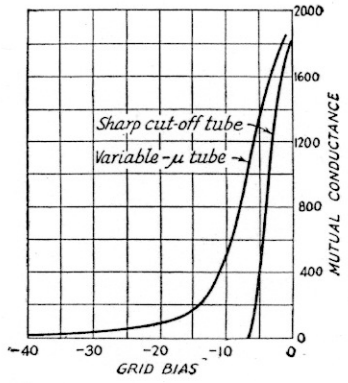

Fig. 323 — Curves showing mutual conductance vs. negative grid bias for two small receiving pentodes, one a sharp cut-off type and the other a variable-μ type.

Mercury-vapor rectifiers — For a given value of plate current, the power lost in a diode rectifier (§ 3-1) will be lessened if it is possible to decrease the plate-cathode voltage at which the current is obtained. If a small amount of mercury is put in the tube, the mercury will vaporize when the cathode is heated, and, further, will ionize (§ 2-4) when plate voltage is applied. The positive ions neutralize the space charge and reduce the plate-cathode voltage drop to a practically constant value of about 15 volts, regardless of the value of plate current. Since this voltage drop is much smaller than can be attained with purely thermionic conduction, there is less power loss in the rectifier. That the voltage drop is constant when the current varies also is an advantage. Mercury-vapor tubes are widely used in power rectifiers.

Grid-control rectifiers — If a grid is inserted in a mercury-vapor rectifier it is found that with sufficient negative grid bias it is possible to prevent plate current from flowing, but only if the bias is present before plate voltage is applied. If the bias is lowered to the point where plate current can flow, the mercury vapor will ionize and the grid will lose control of plate current, since the space charge disappears when ionization occurs. It can assume control again only after the plate voltage is reduced below the ionizing potential. The same phenomenon also occurs in triodes filled with other gases which ionize at low pressure. Grid-control rectifiers find considerable application in "electronic switching" circuits.

¶ 3-6 Common Elements in Vacuum-Tube Circuits

Types of cathodes — Cathodes are of two general types, directly and indirectly heated. Directly heated cathodes or filaments used in receiving tubes are of the *oxide-coated* type, consisting of a wire or ribbon of tungsten coated with certain rare metals and earths which form an oxide capable of emitting large numbers of electrons with comparatively little cathode-heating power.

When directly heated cathodes are operated on alternating current, the cyclic variation of current causes electrostatic and magnetic effects which vary the plate current of the tube at the supply-frequency rate and thus produce hum in the output. Hum from this source is eliminated by the *indirectly heated* cathode, consisting of a thin metal sleeve or thimble, coated with electron-emitting oxides, enclosing a tungsten wire which acts as a heater. The heater brings the cathode thimble to the proper temperature to cause electron emission. This type of cathode is also known as the *equipotential* cathode since all parts are at the same potential, in contrast to the directly heated filament where a voltage drop occurs along the wire because of the heating current which flows through it.

When a tube has a directly heated cathode, the source of filament power — battery or transformer — necessarily is directly connected to the tube circuit. On the other hand, if the tube has an indirectly heated cathode the source of heating power can be entirely independent of the tube circuit, since the electron-emitting cathode need not be electrically connected to the heating element. This is an advantage in certain types of amplifiers.

While the oxide-coated cathode is the most efficient type, in that it emits large numbers of electrons per watt of heating power, it is suitable only for tubes operating at plate voltages of 1000 volts or less. In the manufacture of the tube there is some tendency for the electron-emitting material to be deposited on the control grid. While this is of little consequence in receiving tubes, it leads to difficulties in power-tube operation. A receiving tube is usually operated with little or no grid current, so that only very small amounts of power must be dissipated by the grid. On the other hand, a power tube operated as a Class-C amplifier or oscillator will take considerable grid current, so that the power the grid must dissipate is relatively high and its temperature will rise correspondingly. In addition, both cathode and plate power dissipation are large in tubes handling large amounts of power, further raising the internal tube temperature, so that the control-grid temperature in a power tube readily may be high enough to cause electron emission from the deposited oxide material. When this occurs, the grid is in effect a second cathode. The plate will attract the electrons so emitted, increasing the total plate current without increasing the power output, with the result that the plate efficiency is lowered and the plate temperature rises. This in turn tends to increase the grid temperature, causing more electron emission, and in a short time the tube will "run away" — that is, its plate current will increase to unsafe values and the power output will decrease.

A second factor which makes oxide-coated cathodes unsuitable for power tubes is bombardment of the cathode by positive ions.

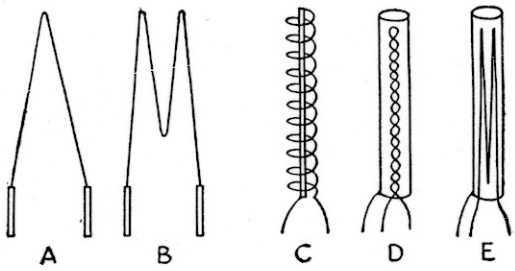

Fig. 324 — Types of cathode construction. Directly heated cathodes or filaments are shown at A, B, and C. The inverted V filament is used in small receiving tubes, the M in both receiving and transmitting tubes. The spiral filament is a transmitting-tube type. The indirectly heated cathodes at D and E show two types of heater construction, one a twisted loop and the other bunched heater wires. Both types tend to cancel the magnetic fields set up by the current through the heater.

Although by far the greater part of the air is pumped out of the tube, it is impossible to obtain a complete vacuum; there is always some residual gas. The gas molecules will become ionized when the tube is operating (§ 2-4), separating into an electron and a positively charged ion, with the latter having practically all the weight of the molecule. The heavy positive ion is repelled by the positive charge on the plate and driven at high velocity into the cathode. The force of the collision breaks up the electron-emitting material, frequently stripping whole sections of it from the heating wire or sleeve.

Tubes intended for operation at voltages up to about three or four thousand volts usually are made with *thoriated-tungsten* cathodes. This type of cathode always is directly heated, consisting of a filament of tungsten containing dissolved thoria. The presence of the thorium makes the filament much more efficient as an electron emitter than tungsten alone, but the thoriated filament is in turn less efficient than the oxide-coated type. However, it is free from the grid-emission effects described above. While it is less susceptible to positive ion bombardment than the oxide-coated type, partly because less gas is trapped or "occluded" in the cathode itself, the beneficial effect of the thorium can be destroyed (at least temporarily) by bombardment.

Since the bombardment increases with higher plate voltages, thoriated filaments become unusable at very high voltages, and tubes built to operate at several thousand volts are provided with cathodes of pure tungsten. This material must be operated at high temperature (white heat) for reasonable electron-emission efficiency, but even under this condition is very much less efficient than either the thoriated or oxide-coated cathode. However, it is the only type which is satisfactory in high-voltage operation.

The operating temperature of a thoriated tungsten filament is fairly critical, particularly with respect to good life characteristics, and the filament voltage should be maintained within a few per cent of the value specified by the manufacturer. These filaments, as well as oxide-coated cathodes, eventually "lose emission"; that is, the emission efficiency of the cathode decreases to the point where it is impossible to obtain sufficient electron emission for satisfactory tube operation without raising the cathode temperature to an unsafe value. Pure tungsten cathodes do not lose emission, but the high operating temperature makes them more susceptible to "burn-out."

Methods of obtaining grid bias — Grid bias may be obtained from a source of voltage especially provided for that purpose, such as a battery or other type of d.c. power supply. This is indicated in Fig. 325-A. A second method, utilizing a *cathode resistor*, is shown at B; d.c. plate current flowing through the resistor causes a voltage drop which, with the connections shown, has the right polarity to bias the grid negatively with respect to the cathode. The value of the resistor is determined by the bias required and the plate current which flows at that value of bias, as found from the tube characteristic curves; with the voltage and current known, the resistance can be determined by Ohm's Law (§ 2-6):

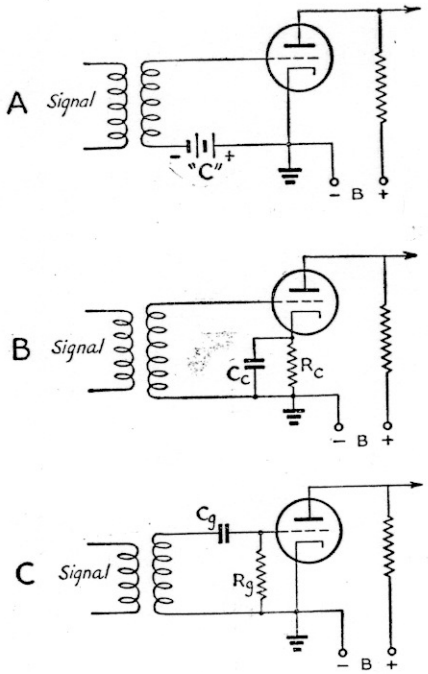

Fig. 325 — The three basic methods of obtaining grid bias. A, fixed bias; B, cathode bias; C, grid-leak bias.

$$R_c = \frac{E \times 1000}{I_c}$$

where R_c = cathode bias resistor in ohms
E = desired bias voltage
I_c = total d.c. cathode current in milliamperes.

If the tube is a multi-element type, the screen- and suppressor-grid currents should be added to the plate current to obtain the total cathode current. The control-grid current also should be included if the control grid is driven positive.

The a.c. component of plate current flowing through the cathode resistor will cause an a.c. voltage drop which gives negative feed-back (§ 3-3) into the grid circuit, and thus reduces the amplification. To prevent this, the resistor usually is by-passed (§ 2-13), C_c being the *cathode by-pass condenser*. To be effective, the reactance of the by-pass condenser must be small compared to R_c at the frequency being amplified. This condition generally is satisfied if the reactance is 10 per cent or less of the cathode resistance. In audio-frequency amplifiers, the *lowest* frequency at which full amplification must be secured should be used in calculating the required capacity.

A third biasing method is by use of a *grid leak*, R_g in Fig. 325-C. This requires that the ex-

citing voltage be positive with respect to the cathode during part of the cycle, so that grid current will flow. The flow of grid current through the grid leak causes a voltage drop across the resistor, which gives the grid a negative bias. The time constant (§ 2-6) of the grid leak and grid condenser should be large in comparison to the time of one cycle of the exciting voltage, so that the grid bias will be substantially constant and will not follow the variations in a.c. grid voltage. For grid-leak bias,

$$R_g = \frac{E \times 1000}{I_g}$$

where R_g = grid-leak resistance in ohms
E = desired bias voltage
I_g = d.c. grid current in milliamperes.

When two tubes are operated in push-pull or parallel and use a common cathode- or grid-leak resistor, the value of resistance becomes one-half what it would be for one tube. In push-pull Class-A circuits operating at audio frequencies, it is unnecessary to by-pass the cathode resistor to prevent negative feed-back. In this case the a.c. component of cathode current in one tube is out of phase with the a.c. component in the other, so that the two components cancel each other.

The choice of a biasing method depends upon the type of operation. Fixed bias generally is required where the d.c. plate current of the amplifier varies in operation, as in Class-B audio-frequency amplifiers. If cathode bias is used in such a case the bias voltage will vary with the plate current, which usually is undesirable. Since the plate current of a Class-A amplifier is constant with or without signal, such amplifiers almost invariably have cathode bias. Grid-leak bias cannot be used with amplifiers operated so that the grid is always negative with respect to the cathode, since in such a case there is no grid current and hence no voltage drop in the grid leak. Grid-leak bias is chiefly used for r.f. power amplifiers and for certain types of detectors. In some types of power amplifiers, two or even all three types of bias may be used on one tube.

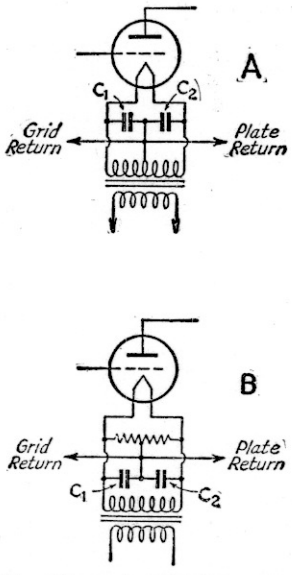

Fig. 326 — Filament center-tap connections.

Cathode circuits; filament center tap — When a filament-type cathode is heated by a.c., the hum introduced can be minimized by making the two ends of the filament have equal and opposite potentials with respect to a center point, usually grounded (§ 2-13), to which the grid and plate return circuits are connected. The filament transformer winding is frequently *center-tapped* for this purpose, as shown in Fig. 326-A. The same result can be secured with an untapped winding by substituting a center-tapped resistor of 10 to 50 ohms, as at B. The by-pass condensers, C_1 and C_2, are used in radio-frequency circuits to avoid having the r.f. current flow through the transformer or resistor, either of which may have considerable reactance at r.f.

The filament supply for tubes with indirectly heated cathodes sometimes is center-tapped for the same purpose; although frequently one side of the filament supply, and hence one terminal of the heater, is grounded.

¶ 3-7 Oscillators

Self-oscillation — The possibility of making an amplifier tube generate a sustained radio-frequency current already has been mentioned (§ 3-5). Self-oscillation is possible only because of the amplifying action of the tube, hence a triode or multi-element tube must be used. The ordinary diode does not amplify, and consequently cannot be made to oscillate.

In an amplifier circuit having positive feed-back, the total amplification is larger than it would be without feed-back (§ 3-3). In general the greater the feed-back the greater the total amplification, but the process of increasing feed-back for greater amplification cannot be carried on indefinitely. Because of the amplifying properties of the tube, more energy is developed in the plate circuit than is required in the grid circuit. If enough energy is fed back to the grid, the feed-back process becomes independent of any applied signal voltage and continuous oscillations are generated. That is, the tube supplies its own grid excitation. The actual energy required to overcome the grid losses is, in the end, taken from the d.c. plate supply.

It is sometimes helpful to look at oscillation from the standpoint of *negative resistance*. As previously described (§ 3-3), positive feed-back is equivalent to shunting a negative resistance across the input circuit of the tube. When the value of negative resistance becomes lower than the positive resistance of the circuit (if the circuit is parallel resonant the positive resistance will be the resonant impedance of the circuit) the net resistance is negative, indicating that the circuit can be looked upon as a *source* of energy. Such a source is capable of

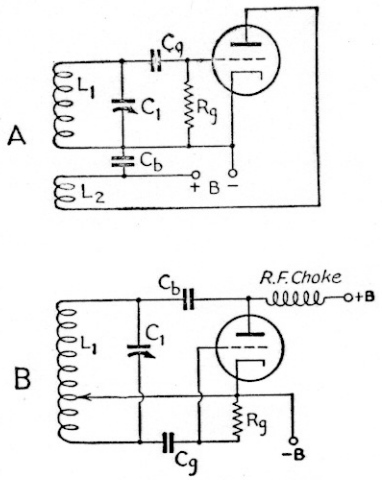

Fig. 327 — Two types of oscillator circuits with magnetic feed-back. A, tickler circuit; B, Hartley circuit.

maintaining a constant voltage which can be amplified by the tube. The actual energy, of course, comes from the plate circuit of the tube, so that the two viewpoints are equivalent.

A circuit having the property of generating continuous oscillations is called an *oscillator*. It is not necessary to apply external excitation to such a circuit, since any random variation in current will be amplified to cause oscillation. The frequency of oscillation will be that at which the feed-back voltage has the proper phase and amplitude. In the case of the resonant circuits usually associated with oscillators, it is very nearly the resonant frequency of the tuned circuit.

Magnetic feed-back — One form of feed-back is by electromagnetic coupling between plate (output) and grid (input) circuits. Two representative circuits of this type are shown in Fig. 327. That at A is called the *tickler* circuit. The amplified current flowing in the "tickler," L_2, induces a voltage in L_1 in the proper phase when the coils are wound in the same direction and are connected as shown in the diagram. The feed-back can be adjusted by adjusting the coupling between L_1 and L_2.

The *Hartley* circuit, B, is similar in principle. There is only one coil, but it is divided so that part of it is in the plate circuit and part in the grid circuit. The magnetic coupling between the two sections of the coil provides the feed-back, which can be adjusted by moving the tap on the coil.

Capacity feed-back — The feed-back can also be obtained through capacity coupling, as shown in Fig. 328. In A, the *Colpitts* circuit, the voltage across the resonant circuit is divided, by means of the series condensers, into two parts. The instantaneous voltages at the ends of the circuit are opposite in polarity with respect to the cathode, hence in the right phase to sustain oscillation.

The tuned-grid tuned-plate circuit at B utilizes the grid-plate capacity of the tube to provide feed-back coupling. There should be no magnetic coupling between the two tuned-circuit coils. Feed-back can be adjusted by varying the tuning of either the grid or plate circuit. The circuit with the higher Q (§ 2-10) determines the frequency of oscillation. The plate circuit must be tuned to a slightly higher frequency than the grid circuit, so that it will have inductive reactance and hence give positive feed-back (§ 3-3). The amount of detuning required is small, so it is customary to assume that the circuits are tuned to approximately the same frequency.

The *ultraudion* circuit at C is equivalent to the Colpitts, with the voltage division for oscillation brought about through the grid-to-filament and plate-to-filament capacities of the tube. In this and in the Colpitts circuit, the feed-back can be controlled by varying the ratio of the two capacities. In the ultraudion circuit, this can be done by connecting a small variable condenser between grid and cathode.

Crystal oscillators — Since a properly cut quartz crystal is equivalent to a high-Q tuned circuit (§ 2-10), it may be substituted for a conventional tuned circuit in an oscillator to control the frequency of oscillation. A simple crystal oscillator circuit is shown in Fig. 329. It will be recognized as the tuned-plate tuned-grid circuit with the crystal substituted for the resonant circuit in the grid. Many variations of this fundamental circuit are used in practice.

Series and parallel feed — A circuit such as the tickler circuit of Fig. 327-A is said to be *series fed* because the source of plate voltage and the r.f. plate circuit (the tickler coil) are

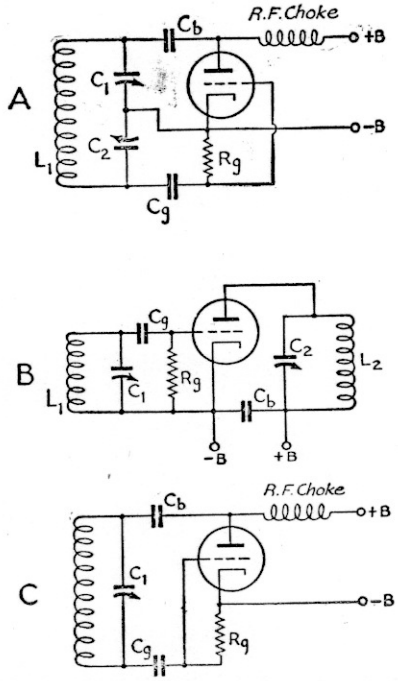

Fig. 328 — Oscillator circuits with capacity feed-back. A, Colpitts; B, tuned-plate tuned-grid; C, ultraudion.

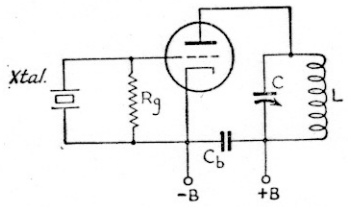

Fig. 329 — Simple crystal oscillator circuit.

connected in series, hence the d.c. plate current flows through the coil to the plate. A by-pass (§ 2-13) condenser, C_b, must be connected across the plate supply to shunt the radio-frequency current around the source of power. Other examples of series plate feed are shown in Figs. 328-B and 329.

In some cases the source of plate power must be connected in parallel with the tuned circuit in order to provide a path for direct current to the plate. This is illustrated by the Hartley circuit of Fig. 327-B, where it would be impossible to feed the plate current through the coil because there is a direct connection between the coil and cathode. Hence the voltage is applied to the plate through a radio-frequency choke, which prevents the r.f. current from flowing to the plate supply and thus short-circuiting the oscillator. The blocking condenser, C_b, provides a low-impedance path for radio-frequency current flow but is an open circuit for direct current (§ 2-13). Other examples of parallel feed are shown in Figs. 328-A and 328-C.

Values of chokes, by-pass and blocking condensers are determined by the considerations outlined in § 2-13.

Excitation and bias — The excitation voltage required depends upon the characteristics of the tube and the losses in the circuit, including the power consumed in the load. In practically all oscillators the grid is driven positive during part of the cycle, so that power is consumed in the grid circuit (§ 3-2). This power must be supplied by the plate circuit. With insufficient excitation, the tube will not oscillate; with too-high excitation, the *grid losses*, or power consumed in the grid circuit, will be excessive.

Oscillators are almost always grid-leak biased (§ 3-6). This not only takes advantage of the grid-current flow but also gives better operation, since the bias adjusts itself to the excitation voltage available.

Tank circuit — The resonant circuit associated with the oscillator generally is called the *tank circuit*. This name derives from the storage of energy associated with a resonant circuit of reasonably high Q (§ 2-10). It is applied to any resonant circuit in transmitting applications, whether used in an oscillator or in an amplifier.

Power output — The *power output* of an oscillator is the useful a.c. power consumed in a load connected to the oscillator. The load may be coupled as described in § 2-11.

Plate efficiency — The *plate efficiency* (§ 3-3) of an oscillator depends upon the load resistance, excitation and other operating conditions, and usually is in the vicinity of 50 per cent. It is not as high as in the case of an amplifier since the oscillator must supply its own grid losses, which usually are 10 per cent to 20 per cent of the output power.

Frequency stability — The frequency stability of an oscillator is its ability to maintain constant frequency in the presence of variable operating conditions. The more important factors which may cause a change in frequency are (1) plate voltage, (2) temperature, (3) loading, (4) mechanical variations of circuit elements. Plate-voltage variations will cause a corresponding instantaneous shift in frequency; this type of frequency shift is called *dynamic* instability. Temperature changes will cause tube elements to expand or contract slightly, thus causing variations in the interelectrode capacities (§ 3-2), and since these are unavoidably part of the tuned circuit the frequency will change correspondingly. Temperature changes in the coil or condenser will change the inductance and capacity slightly, again causing a shift in the resonant frequency. Both these temperature effects are relatively slow in operation, and the frequency change caused by them is called *drift*. Load variations act in much the same way as plate voltage variations except when there is a temperature change in the load, when drift also may be present. Mechanical variations, usually caused by vibration, cause changes in inductance and/or capacity which in turn cause the frequency to "wobble" in step with the vibration.

Dynamic instability can be reduced by using a tuned circuit of high effective Q, which means, since the tube and load represent a relatively low resistance in parallel with the circuit, that a low L/C ratio ("high-C") must be used (§ 2-10) and that the circuit should be lightly loaded. Dynamic stability also can be improved by using a high value of grid leak, which gives high grid bias and raises the effective resistance of the tube as seen by the tank circuit, and by using relatively high plate voltage and low plate current, which accomplishes the same result. Drift can be minimized by using low d.c. input (for the size of tube), by using coils of large wire to prevent undue temperature rise, and by providing good venti-

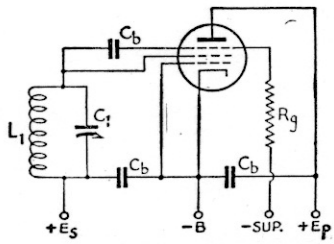

Fig. 330 — Negative-resistance oscillator. This circuit, known as the "transitron," requires that the screen be operated at a higher d.c. potential than the plate.

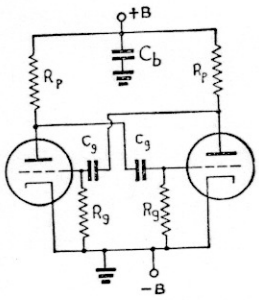

Fig. 331 — The multivibrator, or relaxation oscillator.

lation to carry off heat rapidly. A low L/C ratio in the tank circuit also helps, because the interelectrode capacity variations have proportionately less effect on the frequency when shunted by a large condenser. Special temperature-compensated components also can be used. Mechanical instability can be prevented by using well-designed components and insulating the oscillator from mechanical vibration.

Negative-resistance oscillators — If a resonant circuit were completely free from losses, a current once started would continue indefinitely; that is, sustained oscillations would occur. As previously explained, this condition can be simulated in practice by canceling the actual resistance in the circuit by inserting an equal or greater amount of *negative resistance*. Negative resistance is exhibited by any device showing an increase of current when the applied voltage is decreased, or vice versa.

In addition to negative resistance by feedback, the vacuum tube can be made to show negative resistance by a number of arrangements of electrode potentials. One such circuit is shown in Fig. 330. Negative resistance is produced by virtue of the fact that, as the suppressor grid of a pentode is given more negative bias, electrons normally passing through to the plate are turned back to the screen, thus increasing the screen current and reversing normal tube action (§ 3-2). The negative resistance so produced is sufficiently low so that ordinary tuned circuits will oscillate readily at frequencies up to 15 Mc. or so.

The multivibrator — The type of oscillator circuit shown in Fig. 331 is known as the *multivibrator*, or *relaxation* oscillator. Two tubes are used with resistance coupling, the output of one tube being fed to the input circuit of the other. The frequency of oscillation is determined by the time constants (§ 2-6) of the resistance-capacity combinations. The principle of oscillation is the same as in the feedback circuits already described, the second tube being necessary to obtain the proper phase relationship (§ 3-3) for oscillation when the energy is fed back.

The multivibrator is a very unstable oscillator, and for this reason its frequency readily can be controlled by a small signal of steady frequency introduced into the circuit. This phenomenon is called *locking*. The output waveshape of the multivibrator is highly distorted, hence has high harmonic content (§ 2-7). A useful feature is that the multivibrator can be locked at its fundamental frequency by a frequency corresponding to one of its higher harmonics (the tenth harmonic is frequently used), and thus can be used as a *frequency divider*.

§ 3-8 Cathode-Ray Tubes

Principles — The cathode-ray tube is a vacuum tube in which the electrons emitted from a hot cathode are first accelerated to give them considerable velocity, then formed into a beam, and finally allowed to strike a special translucent screen which *fluoresces*, or gives off light at the point where the beam strikes. A narrow beam of moving electrons is analogous to a wire carrying current (§ 2-4) and, like the wire, is accompanied by electrostatic and electromagnetic fields. Hence the beam can be moved laterally or deflected by electric or magnetic fields, since such fields will exert a force on the beam in the same way as on charged bodies or on wires carrying current (§ 2-3, 2-5). Since the cathode-ray beam consists only of moving electrons, its weight and inertia are negligibly small. For this reason, it can be made to follow instantly the variations in fields which are changing periodically, even at very high radio frequencies.

Electron gun — The electrode arrangement which forms the electrons into a beam is called the *electron gun*. In the simple tube structure shown in Fig. 332, the gun consists of the cathode, grid, and anodes Nos. 1 and 2. The intensity of the electron beam is regulated by the grid in the same way as in an ordinary tube (§ 3-2). Anode No. 1 is operated at a positive potential with respect to the cathode, thus accelerating the electrons which pass through the grid, and is provided with small apertures through which the electron stream passes. On emerging from the apertures the electrons are traveling in practically parallel straight-line paths. The electrostatic fields set up by the potentials on anode No. 1 and anode No. 2 form an *electron lens* system, comparable to an optical lens, which makes the electron paths converge to a point at the fluorescent screen in much the same way that a glass lens takes parallel rays of light and brings them to a point focus. Focusing of the electron beam is accomplished by varying the potentials on the anodes, the potential in turn determining the strength of the field. In practice the potential on anode No. 2 is usually fixed, while that on anode No. 1 is varied to bring the beam to focus. Anode No. 1 is, therefore, frequently called the *focusing electrode*.

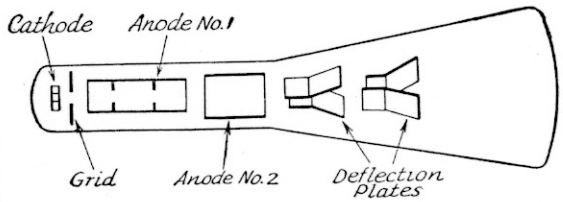

Fig. 332 — Arrangement of the elements in a cathode-ray tube of the type employing electrostatic beam deflection.

Sharpest focus is obtained when the electrons of the beam have high velocity, so that relatively high d.c. potentials are common with cathode-ray tubes. The current flowing to the anodes, however, is quite small (of the order of a few milliamperes at most), so that the power required is negligible. In some tubes a second grid is inserted between the control grid and anode No. 1, to provide additional acceleration of the electrons.

Methods of deflection — When focused, the beam from the gun simply produces a small spot on the screen, as just described. However, if after leaving the gun the beam is deflected by either magnetic or electrostatic fields, the spot will move across the screen in proportion to the force exerted on the beam. If the motion is sufficiently rapid, retentivity of vision makes the path of the moving spot (*trace*) appear as a continuous line.

Electrostatic deflection, generally used in the smaller tubes, is produced by *deflection plates*. Two sets of plates are placed at right angles to each other, as indicated in Fig. 332. The fields are created by applying suitable voltages between the two plates of each pair. Usually one plate of each pair is connected to anode No. 2, to establish the polarities (§ 2-3) of the fields with respect to the beam and to each other.

Tubes intended for magnetic deflection have the same type of gun, but have no deflection plates. Instead the deflecting fields are set up by means of coils, corresponding to the plates in tubes having electrostatic deflection. The coils are external to the tube but are mounted close to the glass envelope in the same relative positions occupied by the electrostatic deflection plates, as shown in Fig. 333. The coils marked A_1 and A_2 are connected so that their fields aid and have their axes on the same line through the tube. The coils marked B_1 and B_2 likewise are connected with fields aiding and also are aligned along the same axis through the tube, but this axis is perpendicular to the A_1-A_2 axis.

The beam deflection caused by a given change in the field intensity is called the *deflection sensitivity*. With electrostatic-deflection tubes it is usually expressed in millimeters per volt, which gives the linear movement of the spot on the screen as a function of the voltage applied to a set of deflecting plates. Values range from about 0.1 to 0.6 mm/volt, depending upon the tube construction and gun electrode voltages. The sensitivity is decreased by an increase in anode No. 2 voltage because a higher voltage gives the electrons in the beam higher velocity, and hence they are less easily deflected by a field of given strength.

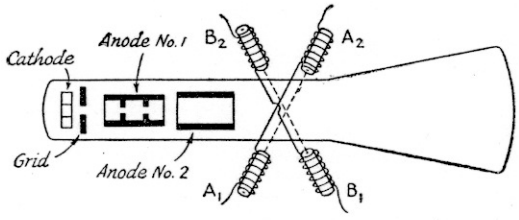

Fig. 333 — A cathode-ray tube with magnetic deflection. The gun represented here is the same as in the electrostatic-deflection tube shown in Fig. 332, but the beam is deflected by magnetic instead of electric fields. Actual deflection coils usually are formed to fit as closely as possible to the neck of the tube, so that the field will be as strong as possible for a given coil current.

Fluorescent screens — The fluorescent screen materials used have varying characteristics, according to the type of work for which the tube is intended. The spot color is green, white, yellow or blue, depending upon the screen material. The *persistence* of the screen is the time duration of the after-glow which exists when the excitation of the electron beam is removed. Screens are classified as long-, medium- and short-persistence. Small tubes for oscilloscopic work usually are provided with medium-persistence screens of greenish fluorescence.

Tube circuits — A representative cathode-ray tube circuit with electrostatic deflection is shown in Fig. 334. One plate of each pair of deflecting plates is connected to anode No. 2. Since the voltages required normally are rather high, the positive terminal of the supply is usually grounded (§ 2-13) so that the common deflection plates will be at ground potential. This places the cathode and other elements at high potentials above ground, hence these elements must be well insulated. The various electrode voltages are obtained from a voltage divider (§ 2-6) across the high-voltage d.c. supply. R_3 is a variable divider or "potentiometer" for adjusting the negative bias on the control grid and thereby varying the beam current; it is called the *intensity* or *brightness* control. The *focus*, or sharpness of the luminous spot formed on the screen by the beam, is controlled by R_4, which changes the ratio of the anode No. 2 and anode No. 1 voltages. The focusing and intensity controls interlock to some extent, and the sharpest focus is obtained by keeping the beam current low.

Deflecting voltages for the plates are applied to the terminals marked "input voltage," R_1 and R_2 being high resistances (1 megohm or more) to drain off any accumulation of charge on the deflecting plates. Usually some provision is made to place an adjustable d.c. voltage on each set of plates, so that the spot can be "centered" when stray electrostatic or magnetic fields are present; the adjustable voltage simply neutralizes such fields.

The tube is mounted so that one set of plates produces a horizontal line when a varying voltage is applied to it, while the other set of plates produces a vertical line under similar conditions. They are called, respectively, the "horizontal" and "vertical" plates, but which set of actual plates produces which line is simply a matter of how the tube is mounted. It is usually necessary to provide a mounting which can be

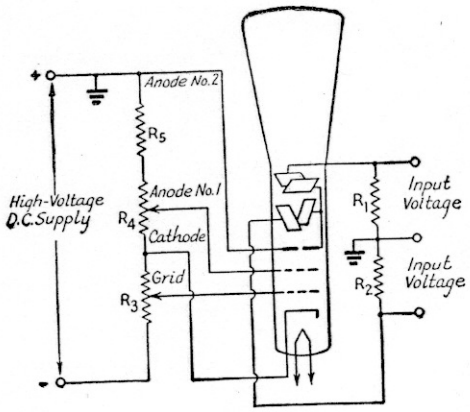

Fig. 334 — Cathode-ray tube circuit. Typical values for a 3-inch (screen-diameter) tube such as the 906:
R_1, R_2 — 1 to 10 megohms. R_4 — 0.2 megohm.
R_3 — 20,000 ohms. R_5 — 0.5 megohm.
The high-voltage supply should be about 1300 volts d.c.

rotated to some extent, so that the lines will actually be horizontal and vertical.

Power supply — The d.c. voltage required for operation of the tube may vary from 500 volts for the miniature type (1-inch diameter screen) to several thousand for the larger tubes. The current, however, is very small, so that the power required is likewise small. Because of the small current requirements, a rectified a.c. supply with half-wave rectification (§ 8-3) and a single 0.5 to 2-μfd. condenser as a filter (§ 8-5) is satisfactory.

§ 3-9 The Oscilloscope

Description — An oscilloscope is essentially a cathode-ray tube in the basic circuit of Fig. 334, but with provision for supplying a suitable deflection voltage on one set of plates (ordinarily those giving horizontal deflection). The deflection voltage is called the *sweep*. Oscilloscopes frequently are also equipped with vacuum-tube amplifiers for increasing the amplitude of small a.c. voltages to values suitable for application to the deflecting plates. These amplifiers ordinarily are limited to operation in the audio-frequency range, and hence cannot be used at radio frequencies.

Formation of patterns — When periodically varying voltages are applied to the two sets of deflecting plates, the path traced by the fluorescent spot forms a *pattern* which is stationary so long as the amplitude and phase relationships of the voltages remain unchanged. Fig. 335 shows how such patterns are formed. The horizontal sweep voltage is assumed to have the "sawtooth" waveshape indicated; with no voltage applied to the vertical plates the trace simply sweeps from left to right across the screen along the horizontal axis X–X′ until the instant H is reached, when it reverses direction and returns to the starting point. The sine-wave voltage applied to the vertical plates similarly would trace a line along the axis Y–Y′ in the absence of any deflecting voltage on the horizontal plates. However, when both voltages are present the position of the spot at any instant depends upon the voltages on both sets of plates at that instant. Thus at time B the horizontal voltage has moved the spot a short distance to the right and the vertical voltage has similarly moved it upward, so that it reaches the actual position B′ on the screen. The resulting trace is easily followed from the other indicated positions, which are taken at equal time intervals.

Types of sweeps — A horizontal sweep-voltage waveshape such as that shown in Fig. 335 is called a *linear sweep*, because the deflection in the horizontal direction is directly proportional to time. If the sweep were perfect the "fly-back" time, or time taken for the spot to return from the end (H) to the beginning (I or A) of the horizontal trace, would be zero, so that the line HI would be perpendicular to the axis Y–Y′. Although the fly-back time cannot be made zero in practicable sweep-voltage generators it can be made quite small in comparison to the time of the desired trace AH, at least at most frequencies within the audio range. The fly-back time is somewhat exaggerated in Fig. 335, to show its effect on the pattern. The line H′I′ is called the *return trace;* with a linear sweep it is less brilliant than the pattern, because the spot is moving much more rapidly during the fly-back time than during the time of the main trace. If the fly-back time is short enough, the return trace will be invisible.

The linear sweep has the advantage that it shows the shape of the wave applied to the vertical plates in the same way in which it is usually represented graphically (§ 2-7). If the time of one cycle of the a.c. voltage applied to the vertical plates is a fraction of the time taken to sweep horizontally across the screen, several cycles of the vertical or signal voltage will appear in the pattern. The shape of only the last cycle (or the last few cycles, depending upon the number in the pattern and the

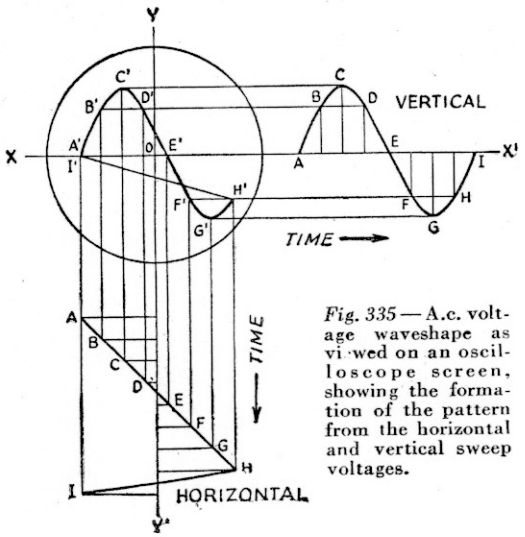

Fig. 335 — A.c. voltage waveshape as viewed on an oscilloscope screen, showing the formation of the pattern from the horizontal and vertical sweep voltages.

characteristics of the sweep) to appear will be affected by the fly-back in such a case.

Although the linear sweep generally is most useful, other sweep waveshapes may be desirable for certain purposes. The shape of the pattern obtained, with a given signal waveshape on the vertical plates, obviously will depend upon the shape of the horizontal sweep voltage. If the horizontal sweep is sinusoidal, the main and return sweeps each occupy the same time and the spot moves faster horizontally in the center of the pattern than it does at the ends. If two sinusoidal voltages of the same frequency are applied to both sets of plates the resulting pattern may be a straight line, an ellipse or a circle, depending upon the amplitude and phase relationships. If the frequencies are harmonically related (§ 2-7) a stationary pattern will result, but if one frequency is not an exact harmonic of the other the pattern will show continuous motion. This is also the case when a linear sweep circuit is used; the sweep frequency and the frequency under observation must be harmonically related or the pattern will not be stationary.

Sweep circuits — A sinusoidal sweep is easiest to obtain, since it is possible to apply a.c. voltage from the power line, either directly or through a suitable transformer, to the horizontal plates. A variable voltage divider or potentiometer can be used to regulate the width of the horizontal trace.

A typical circuit for a linear sweep is shown in Fig. 336. The tube is a *gas triode* or grid-control rectifier (§ 3-5). The breakdown voltage, or plate voltage at which the tube ionizes and starts conducting, is determined by the grid bias. When plate voltage is applied the voltage across C_1 rises, as it acquires a charge through R_1, until the breakdown voltage is reached, when the condenser discharges rapidly through the comparatively low plate-cathode resistance of the tube. When the voltage drops to a value too low to maintain plate-current flow, the ionization is extinguished and C_1 once more charges through R_1. If R_1 is large enough, the voltage across C_1 rises linearly with time up to the breakdown point. This voltage is used for the sweep, being coupled to the cathode-ray tube or to an amplifier through C_2. The fly-back is the time required for discharge through the tube, and to keep it small the resistance during discharge must be low.

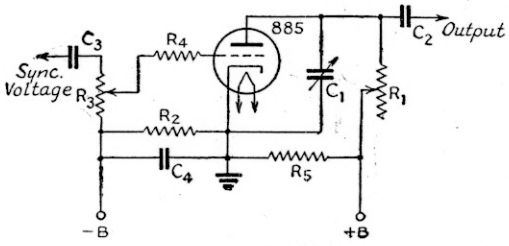

Fig. 336 — A linear sweep-oscillator using a gas triode.
C_1 — 0.001 to 0.25 μfd.
C_2 — 0.5 μfd.
R_1 — 0.3 to 1.5 megohms.
R_2 — 2000 ohms.
R_3 — 0.25 megohm.
C_3 — 0.1 μfd.
C_4 — 25 μfd., 25-volt electrolytic.
R_4 — 25,000 ohms.
R_5 — 0.1 megohm.
The "B" supply should deliver 300 volts. C_1 and R_1 are proportioned to give a suitable sweep frequency; the higher the time constant (§ 2-6), the lower the frequency. R_4 limits grid-current flow during the de-ionizing period, when positive ions are attracted to the negative grid.

To obtain a stationary pattern, the "sawtooth" frequency can be controlled by varying C_1 and R_1 and by introducing some of the voltage to be observed (on the vertical plates) into the grid circuit of the tube. This voltage "triggers" the tube into operation in synchronism with the signal frequency. Synchronization will occur even though the signal frequency is a multiple of the sweep frequency, provided the circuit constants and the amplitude of the synchronizing voltage are properly adjusted.

The voltage output of the type of circuit shown in Fig. 336 is limited, because the charging rate of the condenser is linear only on that portion of the logarithmic charging curve (§ 2-6) which is practically a straight line. A linear charging rate over a longer period of time can be secured by substituting a current-limiting device, such as a properly adjusted vacuum tube, for R_1.

Amplifiers — The usefulness of the oscilloscope is enhanced by providing amplifiers for both the horizontal and vertical sweep voltages, thereby insuring that sufficient voltage will be available at the deflection plates to give a pattern of suitable size. With small oscilloscope tubes (3-inch and smaller screens) the voltage required for a deflection of one inch varies from about 30 to 100 volts, depending upon the anode voltages, so that an amplifier tube capable of an undistorted peak output voltage of 100 or so is necessary. (With such an amplifier, the voltage difference, or total voltage "swing," between the positive and negative peaks is 200 volts.) A resistance-coupled voltage amplifier (§ 3-3) having a pentode tube is ordinarily used because of the high gain obtainable with this type of tube. The amplifier should be designed to have flat frequency response over as wide a range of audio frequencies as possible (§ 3-3, 5-9). Since a voltage gain of 100 to 150 or more is readily obtainable, full deflection of the beam can be secured with an input of one volt or less by the use of such an amplifier.

Constructional considerations — An oscilloscope should be housed in a metal cabinet, both to shield the tube from stray electromagnetic and electrostatic fields which might deflect the beam and also to protect the operator from the high voltages associated with the tube. It is good practice to provide an interlock switch which automatically disconnects the high-voltage supply when the cabinet is opened for servicing or other reasons.

CHAPTER FOUR

R.-F. Power Generation

¶ 4-1 Transmitter Requirements

General Requirements — To minimize interference when a large number of stations must work in one frequency band, the power output of a transmitter must be as stable in frequency and as free from spurious radiations as the state of the art permits. The steady r.f. output, called the *carrier* (§ 5-1), must be free from amplitude variations attributable to ripple from the plate power supply (§ 8-4) or other causes, its frequency should be unaffected by variations in supply voltages or inadvertent changes in circuit constants, and there should be no radiation on other than the intended frequency. The degree to which these requirements can be met depends upon the operating frequency.

Design principles — The design of the transmitter depends on the output frequency, the required power output and the type of operation (c.w. telegraphy or 'phone). For c.w. operation at low power on medium-high frequencies (up to 7 Mc. or so), a simple crystal oscillator circuit can meet the requirements satisfactorily. However, the stable power output which can be taken from an osciliator is limited, so that for higher power the oscillator is used simply as a frequency-controlling element, the power being raised to the desired level by means of amplifiers. The requisite frequency stability can be obtained only when the oscillator is operated on relatively low frequencies, so that for output frequencies up to about 60 Mc. it is necessary to increase the oscillator frequency by multiplication (harmonic generation — § 3-3), which usually is done at fairly low power levels and before the final amplification. An amplifier which delivers power on the frequency applied to its grid circuit is known as a *straight amplifier;* one which gives harmonic output is known as a *frequency multiplier.* An amplifier used principally to isolate the frequency-controlling oscillator from the effects of changes in load or other variations in following amplifier stages is called a *buffer amplifier.* A complete transmitter therefore may consist of an oscillator followed by one or more buffer amplifiers, frequency multipliers and straight amplifiers, the number being determined by the output frequency and power in relation to the oscillator frequency and power. The last amplifier is called the *final amplifier,* and the stages up to the last comprise the *exciter.* Transmitters usually are designed to work in a number of frequency bands so that means for changing frequency harmonic steps usually is provided, generally by means of plug-in inductances.

The general method of designing a transmitter is to decide upon the power output and the highest output frequency required, and also the number of bands in which the transmitter is to operate. The latter usually will determine the oscillator frequency, since it is general practice to set the oscillator on the lowest frequency band to be used. The oscillator frequency seldom is higher than 7 Mc. except in some portable installations where tubes and power must be conserved. A suitable tube (or pair of tubes) should be selected for the final amplifier, and the required grid driving power determined from the tube manufacturer's data. This sets the power required from the preceding stage. From this point the same process is followed back to the oscillator, including frequency multiplication wherever necessary. The selection of a suitable tube complement requires a knowledge of the operating characteristics of the various types of amplifiers and oscillators. These are discussed in the following sections.

At 112 Mc. and higher frequencies these methods of transmitter design tend to become rather cumbersome, because of the necessity for a large number of frequency multiplier stages. However, in this frequency region less severe stability requirements are imposed because the transmission range is limited (§ 9-5) and the possibility of interference to other communication is reduced. Simple oscillator transmitters, without frequency multiplication or buffer amplifiers, are widely used at 112 Mc. and above.

Vacuum tubes — The type of tube used in the transmitter has an important effect on the circuit design. Tubes of high power sensitivity (§ 3-3) such as pentodes and beam tetrodes give larger power amplification ratios per stage than do triodes, hence fewer tubes and stages may be used to obtain the same output power. On the other hand triodes have certain operating advantages, such as simpler power supply circuits and relatively simpler adjustment for modulation (§ 5-3), and in addition are considerably less expensive for the same power output rating. Consequently it is usually more economical to use triodes as output amplifiers, even though an extra low-power amplifier stage may be necessary.

At frequencies in the region of 56 Mc. and above it is necessary to select tubes designed particularly for operation at very-high frequencies, since tubes built primarily for lower frequencies may work poorly or not at all.

¶ 4-2 Self-Controlled Oscillators

Advantages and disadvantages — The chief advantage of a self-controlled oscillator is that the frequency of oscillation is determined by the constants of the tuned circuit, and hence readily can be set to any desired value. However, extreme care in design and adjustment are essential to secure satisfactory frequency stability (§ 3-7). Since frequency stability is generally poorer as the load on the oscillator is increased, the self-controlled oscillator should be used purely to control frequency and not for the purpose of obtaining appreciable power output in transmitters intended for working below 60 Mc.

Oscillator circuits — The inherent stability of all of the oscillator circuits described in § 3-7 is about the same, since stability is more a function of choice of proper circuit values and of adjustment than of the method by which feed-back is obtained. However, some circuits are more convenient to use than others, particularly from the standpoint of feed-back adjustment, mechanical considerations (whether the tuning condenser rotor plates can be grounded or not, etc.), and uniform output over a considerable frequency range. All simple circuits suffer from the fact that the power output must be taken from the frequency-determining tank circuit, so that, aside from the effect of loading on frequency stability, the following amplifier stage also can react on the oscillator in such a way as to cause a change in the frequency.

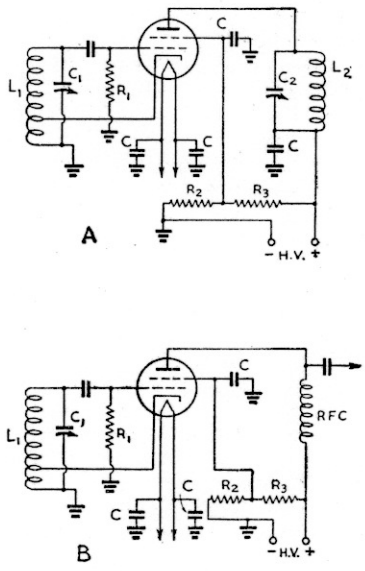

Fig. 401 — Electron-coupled oscillator circuits. For maximum stability the grid leak, R_1, should be 100,000 ohms or more. The grid condenser should be of the order of 100 $\mu\mu$fd. and the other fixed condensers from 0.002 μfd. to 0.1 μfd. Proper values for R_2 and R_3 may be determined from § 8-10. For maximum isolation between oscillator and output circuits the tube should be well shielded and have extremely low grid-plate capacity.

The electron-coupled oscillator — The effects of loading and coupling to the next stage can be greatly reduced by use of the *electron-coupled* circuit, in which a screen-grid tube (§ 3-5) is so connected that its screen grid is used as a plate, in conjunction with the control grid and cathode, in an ordinary triode oscillator circuit. The screen is operated at ground r.f. potential (§ 2-13) to act as a shield between the actual plate and the cathode and control grid; the latter two elements therefore must be above ground potential. The output is taken from the plate circuit. Under these conditions the capacity coupling (§ 2-11) between the plate and other ungrounded tube elements is quite small, hence the output power is secured almost entirely by variations in the plate current caused by the varying potentials on the grid and cathode. Since in a screen-grid tube the plate voltage has a relatively small effect on the plate current, the reaction on the oscillator frequency for different conditions of loading is small.

It is generally most convenient to use a Hartley (§ 3-7) circuit in the frequency-determining part of the oscillator. This is shown in Fig. 401, where L_1C_1 is the oscillator tank circuit. The screen is grounded for r.f. through a by-pass condenser (§ 2-13), but has the usual d.c. potential. The cathode connection is made to a tap on the tank coil to provide feed-back. In the plate circuit, a resonant circuit, L_2C_2, can be connected as shown at A; it may be tuned either to the oscillation frequency or to one of its harmonics. Untuned output coupling is shown at B; with this method the output voltage and power are considerably lower than with a tuned plate circuit, but better isolation between oscillator and amplifier is secured.

If the oscillator tube is a pentode having an external suppressor connection the suppressor grid should be grounded. This provides additional internal shielding and further isolates the plate from the frequency-determining circuit.

Factors influencing stability — The causes of frequency instability and the necessary remedial steps have been discussed in § 3-7. These apply to all oscillators. In addition, in the electron-coupled oscillator the ratio of plate to screen voltage has marked effect on the stability with changes in supply voltage; the optimum ratio is generally of the order of 3:1, but should be determined experimentally for each case. Since the cathode is above ground potential, means should be taken to reduce the effects of heater-to-cathode capacitance or leakage which, by allowing a small a.c. voltage from the heater supply to develop between cathode and ground, may cause modulation (§ 5-1) at the supply frequency. This effect, which is usually appreciable only at 14 Mc. and higher, may be reduced by by-passing the heater as in Fig. 401 or by operating the heater at the same r.f. potential as the cathode. The latter may be accomplished by the wiring arrangement shown in Fig. 402.

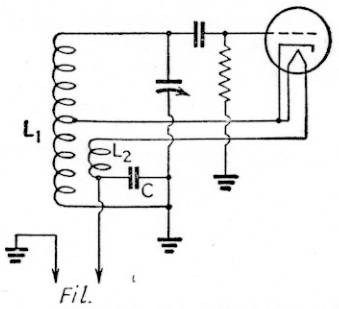

Fig. 402 — Method of operating the heater at cathode r.f. potential in an electron-coupled oscillator. The feed-back coil, L_2, should have the same number of turns as the part of L_1 between ground and the cathode tap, and should be closely coupled to L_1 (preferably interwound). The by-pass condenser, C, should be 0.01 to 0.1 μfd.

Tank-circuit Q — The most important single factor in determining frequency stability is the Q of the oscillator tank circuit. The effective Q must be as high as possible for best stability. Since oscillation is accompanied by grid-current flow the grid-cathode circuit constitutes a resistance load of appreciable proportions, the effective resistance being low enough to be the determining factor in establishing the effective parallel impedance of the tank circuit. Consequently, if the ends of the tank are connected to plate and grid, as is usual, a high effective Q can be obtained only by decreasing the L/C ratio and making the inherent resistance in the tank as low as possible. The tank resistance can be decreased by using low-loss insulation on condensers and coils, and by winding the coil with large wire. With ordinary construction, the optimum tank capacity is of the order of 500 to 1000 $\mu\mu$fd. at a frequency of 3.5 Mc.

The effective circuit Q can be raised by increasing the resistance of the grid circuit and thus decreasing the loading. This can be accomplished through reducing the oscillator grid current, by using minimum feed-back to maintain stable oscillation and by using a high value of grid-leak resistance.

A high-Q tank circuit can also be obtained with a higher L/C ratio by "tapping down" the tube connections on the tank (§ 2-10). This is advantageous in that a coil with higher inherent Q can be used; also, the circulating r.f. current in the tank circuit is reduced so that drift from coil heating is decreased. However, the circuit is complicated to some extent and under some conditions parasitic oscillations may be set up (§ 4-10).

Plate supply — Since the oscillator frequency will be affected to some extent by changes in plate-supply voltage, it is necessary that the latter be free from ripple (§ 8-4) which would cause frequency variations at the ripple-frequency rate (*frequency modulation*). It is advantageous to use a voltage-stabilized power supply (§ 8-8). Since the oscillator usually is operated at low voltage and current, VR-type gaseous regulator tubes are quite suitable.

Power level — The self-controlled oscillator should be designed purely for frequency control and not to give appreciable power output, hence small tubes of the receiving type may be used. The power input ordinarily is not more than a watt or two, subsequent buffer amplifiers being used to increase the power to the desired level. The use of receiving tubes is advantageous mechanically, since the small elements are less susceptible to vibration and usually are securely braced to the envelope.

Oscillator adjustment — The adjustment of an oscillator consists principally in observing the design principles outlined in the preceding paragraphs. Frequency stability should be checked with the aid of a stable receiver. An auxiliary crystal oscillator may be used as a standard for checking dynamic stability and drift, the self-controlled oscillator being adjusted to approximately the same frequency so that an audio-frequency beat (§ 2-13) can be obtained. If it is possible to vary the oscillator plate voltage (an adjustable resistor of 50,000 or 100,000 ohms in series with the plate supply lead will give considerable variation), the change in frequency with change in plate voltage may be observed and the operating conditions varied until minimum frequency shift results. The principal factors affecting dynamic stability will be the tank circuit L/C ratio, the grid-leak resistance, and the amount of feed-back. In the electron-coupled circuit the latter may be adjusted by changing the cathode tap on the tank coil; critical adjustment is required for optimum stability.

Drift may be checked by allowing the oscillator to operate continuously from a cold start, the frequency change being observed at regular intervals. Drift may be minimized by using less than the rated power input to the plate of the tube, by construction which prevents tube heat from reaching the tank circuit elements, and by use of large wire in the tank coil to reduce temperature rise from internal heating.

In the electron-coupled oscillator having a tuned plate circuit (Fig. 401-A), resonance at the fundamental and harmonic frequencies of the oscillator portion of the tube will be indicated by a decrease in plate current as the plate tank condenser is varied. This "dip" should be rather marked at the fundamental, but will be less so on harmonic frequencies.

◖ 4-3 Piezoelectric Crystals

Characteristics — Piezoelectric crystals (§ 2-10) are universally used for controlling the frequency of transmitting oscillators, because the extremely high Q of the crystal and the necessarily loose coupling between it and the oscillator tube make the frequency stability of a crystal-controlled oscillator very high. Active plates may be cut from a raw crystal at various angles to its electrical, mechanical and optical axes, resulting in differing characteristics as to thickness, frequency-temperature coefficient, power-handling capabilities, etc.

The commonly used cuts are designated as X, Y, AT, V, and LD.

The ability to adhere closely to a known frequency is the outstanding characteristic of a crystal oscillator. This also is a disadvantage, in that a different crystal is required for each frequency on which the transmitter is to operate.

Frequency-thickness ratio — Crystals used for transmitting purposes are so cut that the thickness of the crystal is the frequency-determining factor, the length and width of the plate being of relatively minor importance. For a given crystal cut, the thickness and frequency are related by a constant, k; that is,

$$F = \frac{k}{t}$$

where F is the frequency in megacycles and t is the thickness of the crystal in thousandths of an inch. For the X-cut, $k = 112.6$; for the Y-cut, $k = 77.0$; for the AT-cut, $k = 66.2$.

At frequencies above the 7-Mc. region the crystal becomes very thin and correspondingly fragile, so that crystals seldom are manufactured for operation much above this frequency. Direct crystal control on 14 and 28 Mc. is secured by use of "harmonic" crystals, which are ground to be active oscillators when excited at the third harmonic of the frequency represented by their thickness.

Temperature coefficient of frequency — The resonant frequency of a crystal will vary with its temperature, to an extent depending upon the type of cut. The frequency-temperature coefficient is usually expressed in the number of cycles frequency change per megacycle per degree Centigrade temperature change, and may be either positive (increasing frequency with increasing temperature) or negative (decreasing frequency with increasing temperature). X-cut crystals have a negative coefficient of 15 to 25 cycles/megacycle/degree C. The coefficient of Y-cut crystals may vary from − 20 cycles/megacycle/degree C. to + 100 cycles/megacycle/degree C. The AT, V and LD cuts have very low coefficients. Y-cut crystals frequently "jump" to another frequency when the temperature is changed rather than gradually changing frequency as the nominal coefficient might indicate, and hence are rather unreliable under temperature variations.

The temperature of a crystal depends not only on the temperature of its surroundings but also on the power it must dissipate while oscillating, since power dissipation causes heating (§ 2-6, 2-8). Consequently, the crystal temperature in operation may be considerably above that of the surrounding air. To minimize heating and frequency drift (§ 3-7), the power dissipated must be kept to a minimum.

Power limitations — If the crystal is made to oscillate too strongly, as when it is used in an oscillator circuit with high plate voltage and excessive feed-back, the amplitude of the mechanical vibration will become great enough to crack or puncture the quartz. An indication of the vibration amplitude can be obtained by connecting an r.f. current-indicating device of suitable range in series with the crystal. Safe r.f. crystal currents range from 50 to 200 milliamperes, depending upon the type of cut. A flashlight bulb or dial light of equivalent current rating makes a good current indicator. By choosing a bulb of lower rating than the current specified by the manufacturer as safe for the particular type of crystal used, the bulb will serve as a fuse, burning out before a current dangerous to the crystal is reached. The 60-ma. and 100-ma. bulbs frequently are used for this purpose. High crystal current is accompanied by increased power dissipation and heating, so that the frequency change also is greatest when the crystal is overloaded.

Crystal mountings — To make use of the crystal, it must be mounted between two metal electrodes. There are two types of mountings, one having a small air-gap between the top plate and the crystal and the other maintaining both plates in contact with the crystal. It is essential that the surfaces of the metal plates in contact with the crystal be perfectly flat. In the air-gap type of holder, the frequency of oscillation depends to some extent upon the size of the gap. By using a holder having a top plate with closely adjustable spacing, a controllable frequency variation can be obtained. A 3.5-Mc. crystal will oscillate without very great variation in power output over a range of about 5 kc. X- and Y-cut crystals are not generally suitable for this type of operation, because they have a tendency to "jump" in frequency with different air gaps.

A holder having a heavy metal bottom plate with a large surface exposed to the air is advantageous in that it radiates quickly the heat generated in the crystal, thereby reducing temperature effects. Different plate sizes, pressures, etc., will cause slight changes in frequency, so that if a crystal is being ground to an exact frequency it should be tested in the same holder and in the same oscillator circuit with which it will be used in the transmitter.

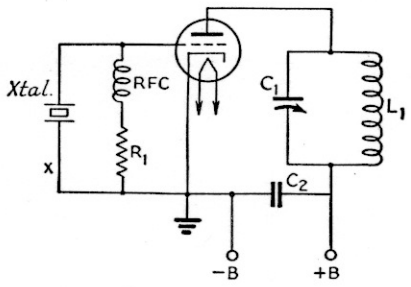

Fig. 403 — Triode crystal oscillator. The tank condenser, C_1, may be a 100-$\mu\mu$fd. variable, with L_1 proportioned so that the tank will tune to the crystal frequency. C_2 should be 0.001 μfd. or larger. The grid leak, R_1, will vary with the type of tube; high-μ tubes take values of 2500 to 10,000 ohms, while medium and low-μ types take values of 10,000 to 25,000 ohms. A small flashlight bulb or r.f. milliammeter (§ 4-3) may be inserted at X.

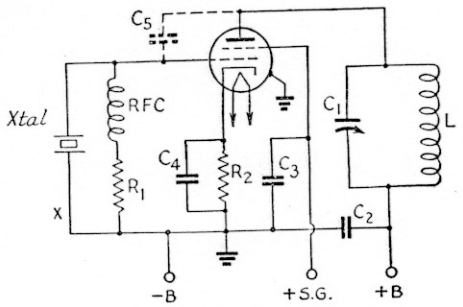

Fig. 404 — Tetrode or pentode crystal oscillator. Typical values: C_1, 100 $\mu\mu$fd., with L wound to suit frequency; C_2, C_3, 0.001 μfd. or larger; C_4, 0.01 μfd.; R_1, 10,000 to 50,000 ohms, best value being determined by trial for the plate voltage and operating conditions chosen; R_2, 250 to 400 ohms. R_2 and C_4 may be omitted, connecting cathode directly to ground, if plate voltage is limited to 250 volts. C_5 (if needed) may be formed by two metal plates ½-inch square spaced ¼ inch. If the tube has a suppressor grid, it should be grounded. X indicates where a flashlight bulb may be inserted (§ 4-3).

§ 4-4 Crystal Oscillators

Triode oscillators — The triode crystal oscillator circuit (§ 3-7) is shown in Fig. 403. The limit of plate voltage that can be used without endangering the crystal is about 250 volts. With the r.f. crystal current limited to a safe value of about 100 ma., the power output obtainable is about 5 watts. The oscillation frequency is dependent to some extent on the plate tank tuning, because of the change in input capacity with changes in effective amplification (§ 3-3).

Tetrode and pentode oscillators — Since the power output of a crystal oscillator is limited by the permissible r.f. crystal current (§ 4-3), it is advantageous to use an oscillator tube of high power sensitivity (§ 3-3) such as a pentode or beam tetrode (§ 3-5). Thus for a given crystal voltage or current more power output may be obtained than with the triode oscillator, or for a given output the crystal voltage will be lower, thereby reducing crystal heating. In addition, tank-circuit tuning and loading react less on the crystal frequency because of the lower grid-plate capacity (§ 3-3).

Fig. 404 shows a typical pentode or tetrode oscillator circuit. The pentode and tetrode tubes designed for audio power work are excellent crystal-oscillator tubes. The screen voltage is generally of the order of half the plate voltage for optimum operation. Small tubes rated at 250 volts for audio work may be operated with 300 volts on the plate and 100–125 on the screen as crystal oscillators. The screen is at ground potential for r.f. and has no part in the operation of the circuit other than to set the operating characteristics of the tube. The larger beam tubes may be operated at 400 to 500 volts on the plate and 250 on the screen for maximum output.

Pentode oscillators operating at 250 to 300 volts will give 4 or 5 watts output under normal conditions. Beam-type tubes such as the 6L6 and 807 will give 15 watts or more at maximum plate voltage.

The grid-plate capacity may be too low to give sufficient feed-back, particularly at the lower frequencies, in which case a feed-back condenser, C_5, may be required. Its capacity should be the lowest value which will give stable oscillation; 1 or 2 $\mu\mu$fd. is generally sufficient.

Circuit constants — Typical values for grid-leak resistances and by-pass condensers are given in Figs. 403 and 404. Since the crystal is the frequency-determining element, the Q of the plate tank circuit has a relatively minor effect on the oscillator frequency. A Q of 12 (§ 4-8) is satisfactory for average conditions, but some departure from this figure will not greatly affect the performance of the oscillator.

Adjustment of crystal oscillators — The tuning characteristics and procedure to be followed in tuning are essentially the same for triode, tetrode or pentode crystal oscillators. Using a plate milliammeter as an indicator of oscillation (a 0–100 ma. d.c. meter will have ample range for all low-power oscillators), the plate current will be found to be steady when the circuit is in the non-oscillating state, but will dip when the plate condenser is tuned through resonance at the crystal frequency. Fig. 405 is typical of the behavior of plate current as the tank condenser capacity is varied. An r.f. indicator, such as a small neon bulb touched to the plate end of the tank coil, will show a maximum indication at point A. However, when the oscillator is delivering power to a load it is best to operate in the region B-C since the oscillator will be more stable and there is less likelihood that a slight change in loading will throw the circuit out of oscillation, which is likely to happen when operation is too near the critical point, A. The crystal current also is lower in the B-C region.

When power is taken from the oscillator the dip in plate current is less pronounced, as indicated by the dotted curve. The greater the power output, the smaller the dip in plate current. If the load is made too great, oscillations will not start. Loading is adjusted by varying the coupling to the load circuit (§ 2-11).

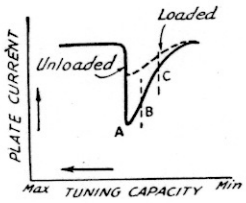

Fig. 405 — Curves showing d.c. plate current vs. plate tuning capacity in a crystal oscillator, both with and without load. These curves apply equally to the triode, tetrode or pentode crystal oscillator.

The greater the loading, the smaller the voltage fed back to the grid circuit for excitation purposes. This means that the r.f. voltage across the crystal also will be reduced, hence there is less crystal heating when the oscillator is delivering power than when it is unloaded.

Failure of a crystal circuit to oscillate may be caused by any of the following:

1) Dirty, chipped or fractured crystal.
2) Imperfect or unclean holder surfaces.
3) Too tight coupling to load.
4) Plate tank circuit not tuning correctly.
5) Insufficient feed-back capacity.

Pierce oscillator — This circuit is shown in Fig. 406. It is equivalent to the ultraudion circuit (§ 3-7), with the crystal replacing the tuned circuit. Although the output of the Pierce oscillator is relatively small, it has the advantage that no tuning controls are required. The circuit requires capacitive coupling to a following stage. The amount of feed-back is determined by the condenser, C_2. To sustain oscillation, the net reactance (§ 2-8) of the plate-cathode circuit must be capacitive; this condition is met so long as the inductance of the r.f. choke, together with the inductance of any coils associated with the input circuit of the following stage and the tube and stray capacities, forms a circuit tuned to a lower frequency than that of the crystal.

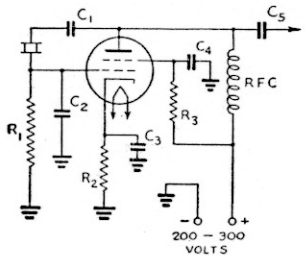

Fig. 406 — Pierce oscillator circuit. Tubes such as the 6C5 and 6F6 are suitable, operating at plate voltages not exceeding 300 to prevent crystal fracture. When a triode is used, R_3 and C_4 are omitted. R_1 should be 25,000 to 50,000 ohms. 1000 ohms is recommended for R_2. R_3 is the screen voltage dropping resistance (75,000 ohms for the 6F6). C_1 may have any value between 0.001 and 0.01 μfd. C_3 and C_4 should be 0.01 μfd. C_2, the regeneration capacity, must be determined by experiment; usual values are between 50 and 150 μμfd. The capacity of C_5 should be adjusted so that the oscillator is not overloaded; usually 100 μμfd is satisfactory.

¶ 4-5 Harmonic-Generating Crystal Oscillators

Tri-tet oscillator — The Tri-tet oscillator circuit is shown in Fig. 407. In this circuit the screen grid is operated at ground potential and the cathode at an r.f. potential above ground. The screen-grid acts as the anode of a triode crystal oscillator, while the plate or output circuit is tuned to the oscillator frequency or, for harmonic output, to a multiple of it.

Besides giving harmonic output, the Tri-tet circuit has the "buffering" feature of electron-coupling between crystal and output circuits (§ 4-2). This makes the crystal frequency less susceptible to changes in loading or tuning, and hence improves the stability.

If the output circuit is to be tuned to the same frequency as the crystal, a tube having low grid-plate capacity (§ 3-2, 3-5) must be used. Otherwise, there may be excessive feed-back and danger of fracturing the crystal.

The cathode tank circuit, L_1C_1, is not tuned to the frequency of the crystal, but to a considerably higher frequency. Recommended values for L_1 are given under the diagram. C_1 should be set to as near minimum capacity as is consistent with good output. This reduces the crystal voltage.

With pentode-type tubes having separate suppressor connections, the suppressor may be either connected directly to ground or operated at about 50 volts positive. The latter method will give somewhat higher output than with the suppressor connected to ground.

With transmitting pentodes or beam tubes operated at 500 volts on the plate an output of 15 watts can be obtained on the fundamental and very nearly as much on the second harmonic, or enough to drive directly an amplifier of moderate power.

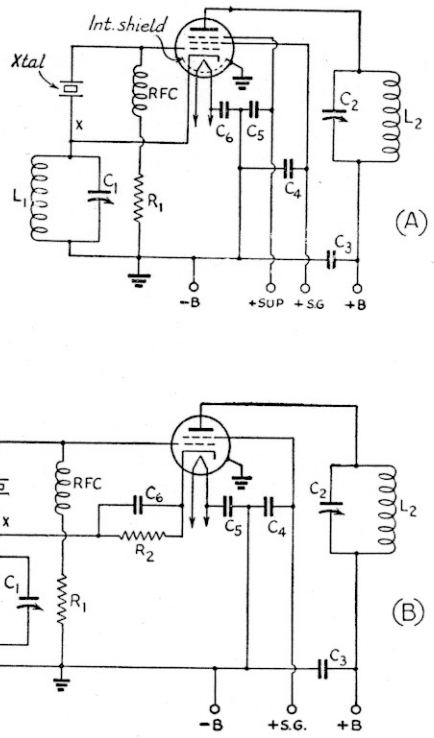

Fig. 407 — Tri-tet oscillator circuit, using pentodes (A) or beam tetrodes (B). C_1 and C_2 are 200-μμfd. variable condensers. C_3, C_4, C_5, C_6, may be 0.001 to 0.01 μfd.; their values are not critical. R_1, 20,000 to 100,000 ohms. R_2 should be 400 ohms for 400- or 500-volt operation. The following specifications for the cathode coils, L_1, are based on a diameter of 1½ inches and a length of 1 inch; turns should be spaced evenly to fill the required length: for 1.75-Mc. crystal, 32 turns; 3.5 Mc., 10 turns; 7 Mc., 6 turns. The screen should be operated at 250 volts or less. Audio beam tetrodes such as the 6L6 and 6L6G should be used only for second-harmonic output. A flashlight bulb may be inserted at the point marked X (§ 4-3). The L/C ratio in the plate tank, L_2C_2, should be such that the capacity in use is 75 to 100 μμfd. for fundamental output and about 25 μμfd. for second harmonic output.

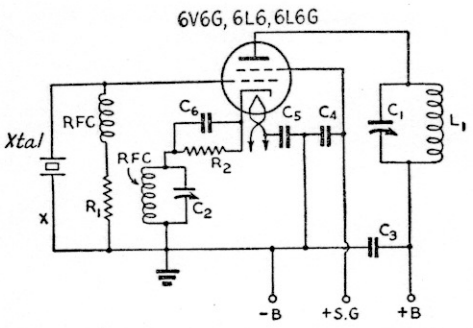

Fig. 408 — Grid-plate crystal oscillator circuit. In the cathode circuit, *RFC* is a 2.5-mh. r.f. choke. Other constants are the same as in Fig. 407. A crystal-current indicator may be inserted at the point marked *X* (§ 4-3).

Grid-plate oscillator — In the grid-plate oscillator, Fig. 408, the crystal is connected between grid and ground and the cathode tuned circuit, C_2RFC, is tuned to a frequency lower than that of the crystal. This circuit gives high output on the fundamental crystal frequency with low crystal current. The output on even harmonics (2nd, 4th, etc.) is not as great as that obtainable with the Tri-tet, but on odd harmonics (3rd, 5th, etc.) the output is appreciably better.

If harmonic output is not needed, C_2 may be a fixed capacity of 100 $\mu\mu$fd. The cathode coil, *RFC*, may be a 2.5-mh. choke, since the inductance is not critical.

Output power of 15 to 20 watts at the crystal fundamental may be obtained with a tube such as the 6L6G at plate and screen voltages of 400 and 250, respectively.

Tuning and adjustment — The tuning procedure for the Tri-tet oscillator is as follows: With the cathode tank condenser at about three-quarters scale turn the plate tank condenser until there is a sharp dip in plate current, indicating that the plate circuit is in resonance. The crystal should be oscillating continuously, regardless of the setting of the plate condenser. Set the plate condenser so that plate current is minimum. The load circuit may then be coupled and adjusted so that the oscillator delivers power. The minimum plate current will rise; it may be necessary to retune the plate condenser when the load is coupled to bring the plate current to a new minimum. Fig. 409 shows the typical behavior of plate current with plate-condenser tuning.

After the plate circuit is adjusted and the oscillator is delivering power, the cathode condenser should be readjusted to obtain optimum power output. The setting should be as far toward the low-capacity end of the scale as is consistent with good output; it may, in fact, be desirable to sacrifice a little output if so doing lowers the current through the crystal and thus reduces heating.

For harmonic output the plate tank circuit is tuned to the harmonic instead of the fundamental of the crystal frequency. A plate-current dip will occur at the harmonic. If the cathode condenser is adjusted for maximum output at the harmonic, this adjustment will usually serve for the fundamental as well. The crystal should be checked for excessive heating, the most effective remedy being to lower plate and/or screen voltage or to reduce the loading. Maximum r.f. voltage across the crystal is developed at maximum load, so heating should be checked with the load coupled.

When a fixed cathode condenser is used in the grid-plate oscillator the plate tank circuit is simply resonated, as indicated by the plate-current dip, to the fundamental or a harmonic of the output frequency, loading being adjusted to give optimum power output. If the variable cathode condenser is used, it should be set to give, by observation, the maximum power output consistent with safe crystal current. The variable condenser is useful chiefly in increasing the output on the third and higher harmonics; for fundamental operation, the cathode capacity is not critical and the fixed condenser may be used.

¶ 4-6 Interstage Coupling

Requirements — The purpose of the interstage coupling system is to transfer, with as little energy loss as possible, the power developed in the plate circuit of one tube (the *driver*) to the grid circuit of the following amplifier tube or frequency multiplier. The circuits in practical use are based on the fundamental coupling arrangements described in § 2-11. In the process of power transfer, impedance transformation (§ 2-9) frequently is necessary so that the proper exciting voltage and current will be available at the grid of the driven tube.

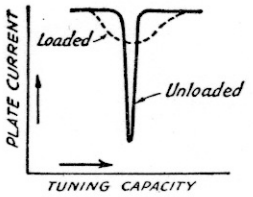

Fig. 409 — Curves showing d.c. plate current vs. plate tuning capacity, both with and without load, for the Tri-tet oscillator. The setting for minimum plate current may shift with loading.

Capacity coupling — Fig. 410 shows several types of capacitive coupling. In each case, *C* is the coupling condenser. The coupling condenser serves also as a blocking condenser (§ 2-13) to isolate the d.c. plate voltage of the driver from the grid of the amplifier. The circuits of C and D are preferable when a balanced circuit is used in the output of the driver; instead of both tubes being in parallel across one side, the output capacity of the driver tube and the input capacity of the amplifier are across opposite sides of the tank circuit, thereby preserving a better circuit balance. The circuits of E and F are designed for coupling to a push-pull stage.

In A, B, E and F, excitation is adjusted by moving the tap on the coil to provide an optimum impedance match. In E and F, the two grid taps should be maintained equidistant from the center-tap on the coil.

While capacitive coupling is simplest from the viewpoint of construction, it has certain disadvantages. The input capacity of the amplifier is shunted across at least a portion of the driver tank coil. When added to the output capacity of the driver tube, this additional capacity may be sufficient, in many cases, to prevent use of a desirable L/C ratio in circuits for frequencies above about 7 Mc.

Link coupling — At the higher frequencies it is advantageous in reducing the effects of tube capacities on the L/C ratio to use separate tank circuits for the driver plate and amplifier grid, coupling the two circuits by means of a link (§ 2-11). This method of coupling also has some constructional advantages, in that separate parts of the transmitter may be constructed as separate units without the necessity for running long leads at high r.f. potential.

Circuits for link coupling are shown in Fig. 411. The coupling ordinarily is by a turn or two of wire closely coupled to the tank inductance at a point of low r.f. potential, such as the center of the coil of a balanced tank circuit or the "ground" end of the coil in a single-ended circuit. The link line usually consists of two closely spaced parallel wires; occasionally the wires are twisted together, but this usually causes undue losses at high frequencies.

It is advisable to have some means of varying the coupling between link and tank coils. The link coil may be arranged to be swung in relation to the tank coil or, when it consists of a large turn around the outside of the tank coil, split into two parts which can be pulled apart or closed somewhat in the fashion of a pair of calipers. If the tank coils are wound on forms, the link may be wound close to the main coil.

With fixed coils, some adjustment of coupling usually can be obtained by varying the number of turns on the link. In general, the proper number of turns for the link must be found by experiment.

¶ 4-7 R.F. Power Amplifier Circuits

Tetrode and pentode amplifiers — When the input and output circuits of an r.f. amplifier tube are tuned to the same frequency it will oscillate as a tuned-grid tuned-plate oscil-

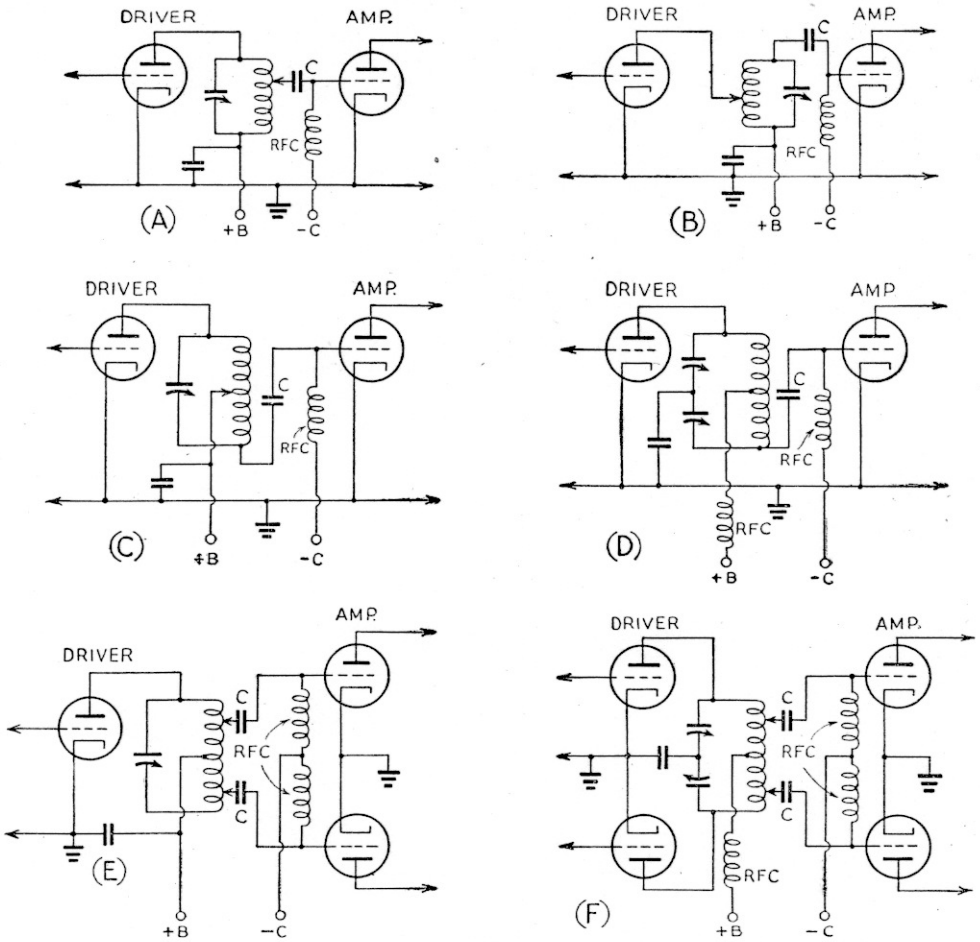

Fig. 410 — Direct- or capacity-coupled driver and amplifier stages. The coupling capacity may be from 50 $\mu\mu$fd. to 0.002 μfd.; it is not critical except where tapping the coils for control of excitation is not possible. Parallel plate feed to the driver and series grid feed to the amplifier may be substituted in any of the circuits (§ 3-7).

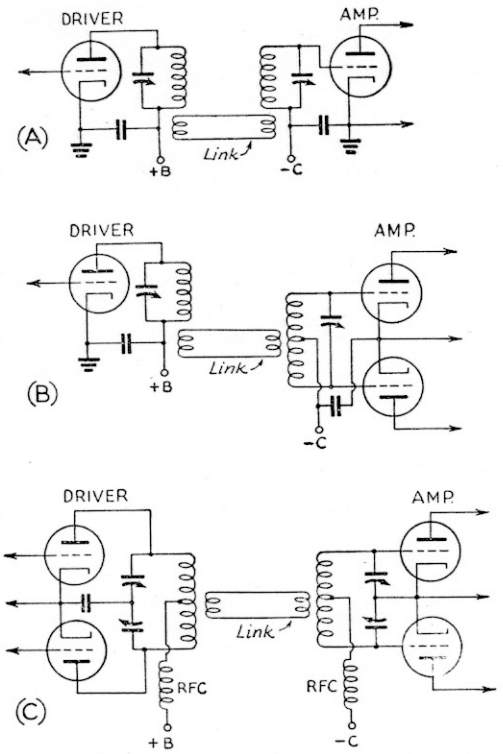

Fig. 411 — Link coupling between driver and amplifier.

lator, unless some means is provided to eliminate the effects of feed-back through the plate-to-grid capacity of the tube (§ 3-5). In all transmitting r.f. tetrodes and pentodes, this capacity is reduced to a satisfactory degree by the internal shielding between grid and plate provided by the screen. Tetrodes and pentodes designed for audio use (such as the 6L6, 6V6, 6F6, etc.) are not sufficiently well screened for use as r.f. amplifiers without employing suitable means for nullifying the effect of the grid-plate capacity.

Typical circuits of tetrode and pentode r.f. amplifiers are shown in Fig. 412. The high power sensitivity (§ 3-3) of pentodes and tetrodes, makes them prone to self-oscillate with very small values of feed-back voltage, however, so that particular care must be used to prevent feed-back by means external to the tube itself. This calls for adequate isolation of plate and grid tank circuits to prevent undesired magnetic or capacity coupling between them. The requisite isolation can be secured by keeping the circuits well separated and mounting the coils so that magnetic coupling is minimized, or by shielding (§ 2-11).

Triode amplifiers — The feed-back through the grid-plate capacity of a triode cannot be eliminated, and therefore special circuit means called *neutralization* must be used to prevent oscillation. A properly neutralized triode amplifier then behaves as though it were operating at very low frequencies, where the grid-plate capacity feed-back is negligible (§ 3-3).

Neutralization — Neutralization amounts to taking some of the radio-frequency current from the output or input circuit of the amplifier and introducing it into the other circuit in such a way that it effectively cancels the current flowing through the grid-plate capacity of the tube, thus rendering it impossible for the tube to supply its own excitation. For complete neutralization, the two currents must be opposite in phase (§ 2-7) and equal in amplitude.

The out-of-phase current (or voltage) can be obtained quite readily by using a balanced tank circuit for either grid or plate, taking the neutralizing voltage from the end of the tank opposite that to which the grid or plate is connected. The amplitude of the neutralizing voltage can be regulated by means of a small condenser, the *neutralizing condenser*, having the same order of capacity as the grid-plate capacity of the tube. Circuits in which the neutralizing voltage is obtained from a balanced grid tank and fed to the plate through the neutralizing condenser are termed *grid-neutralized* circuits, while if the neutralizing voltage is obtained from a balanced plate tank and fed to the grid of the tube the circuit is *plate-neutralized.*

Plate-neutralized circuits — The circuits for plate neutralization are shown in Fig. 413

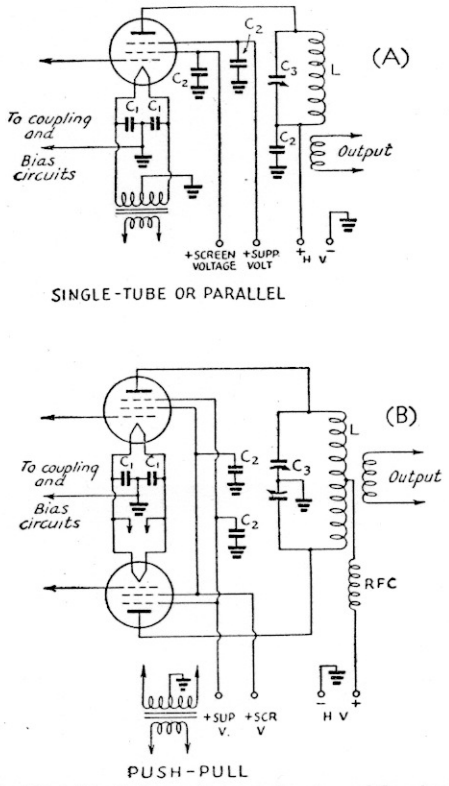

Fig. 412 — Typical tetrode-pentode r.f. amplifier circuits. C_1 — 0.01 μfd. C_2 — 0.001 μfd. C_3-L — see § 4-8. In circuits for tetrodes, the suppressor-grid connection and its associated by-pass condenser are omitted.

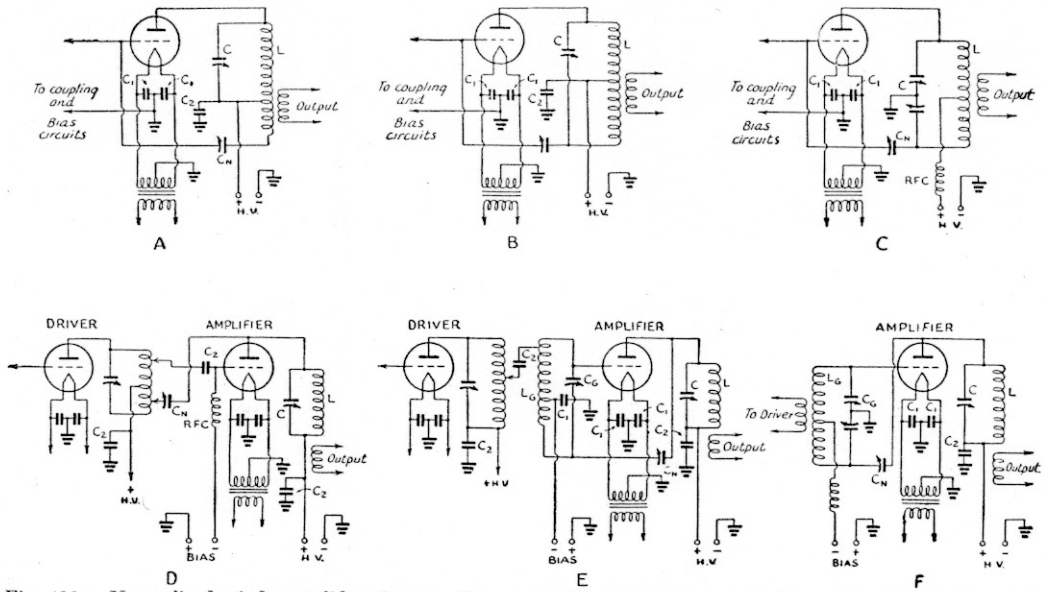

Fig. 413 — Neutralized triode amplifier circuits. Plate neutralization is shown in A, B and C, while D, E and F show types of grid neutralization. Either capacitive or link coupling may be used with the circuits of A, B or C. *C-L* — See § 4-8. C_g-L_g — Grid tank circuit. C_n — Neutralizing condensers. C_1 — 0.01 μfd. C_2 — 0.001 μfd.

at A, B and C. In A, voltage induced in the extension of the tank coil is fed back to the grid through the neutralizing condenser, C_n, to balance the voltage appearing between grid and plate. In this circuit, the capacity required at C_n increases as the tank coil extension is made smaller; in general, neutralization is satisfactory over only a small range of frequencies since the coupling between the two sections of the tank coil will vary with the amount of capacity in use at *C*.

In B the tank coil is center-tapped to give equal voltages on either side of the center tap, the tank condenser being across the whole coil. The neutralizing capacity is approximately equal to the grid-plate capacity of the tube, in this case. A disadvantage of the circuit, when used with the single tank condenser shown, is that the rotor of the condenser is above ground potential, and hence small capacity changes caused by bringing the hand near the tuning control (*hand capacity*) cause detuning. In general, neutralization is complete at only one frequency since the plate-cathode capacity of the tube is across only half the tank coil; also, it is difficult to secure an exact center-tap. Both of these factors cause unbalance, which in turn causes the voltages across the two halves of the coil to differ when the frequency is changed.

The circuit of C also uses a center-tapped tank circuit, the voltage division being secured by use of a balanced (split-stator) tank condenser, the two condenser sections being identical. C_n is approximately equal to the grid-plate capacity of the tube. In this circuit the upper section of the tank condenser is in parallel with the output capacity of the tube, hence the circuit can be completely neutralized at only one setting of the tank condenser unless a compensating capacity (Fig. 414) is connected across the lower section. In practice, if the capacity in use in the tank circuit is large compared to the plate-cathode capacity the unbalancing effect is not serious.

Grid-neutralized circuits — Typical circuits employing grid neutralization are shown in Fig. 413 at D, E and F. The principle of balancing out the feed-back voltage is the same as in plate neutralization. However, in these circuits the feed-back voltage may be either in phase or out of phase with the excitation voltage on the grid side of the input tank circuit (and the opposite on the other side) depending upon whether the tank is divided by means of a balanced condenser or a tapped coil. Circuits such as those at D and E, neutralized by ordinary procedure (described below), will be regenerative when the plate voltage is applied; the circuit at F will be degenerative. In addition the normal unbalancing effects previously described are present, so that grid neutralizing is less satisfactory than the plate method.

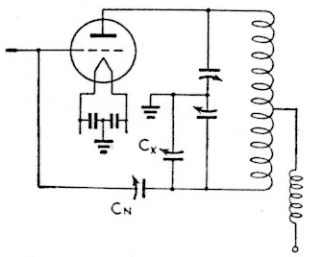

Fig. 414 — Compensating for unbalance in the single-tube neutralizing circuit. C_x, the balancing condenser, has a maximum capacity somewhat larger than the tube output capacity. It is adjusted so the neutralizing condenser need not be changed when frequency is shifted.

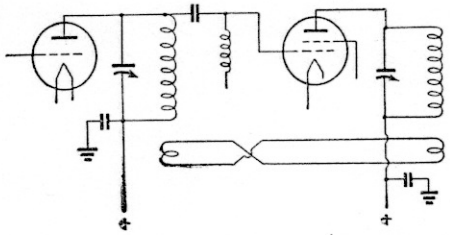

Fig. 415 — Inductive neutralizing circuit. The link coils are of one or two turns coupled to the grounded ends of the tank coils. Neutralization is adjusted by moving the link coils in relation to the tank coils. Reversal of connections to one coil may be required for proper phasing.

Inductive neutralization — With this type of neutralization, inductive coupling between the grid and plate circuits is provided in such a way that the voltage induced in the grid coil by magnetic coupling from the plate coil opposes the voltage fed back through the grid-plate capacity of the tube. A representative circuit arrangement, using a coupling link to provide the mutual inductance (§ 2-11), is shown in Fig. 415. Ordinary inductive coupling between the two coils also could be used, but it is less convenient. Inductive neutralization is complete only at one frequency since the effective mutual inductance changes to some extent with tuning, but is useful in cases where the grid-plate capacity of the tube being neutralized is very small and suitable circuit balance cannot be obtained with circuits using neutralizing condensers.

Push-pull neutralization — With push-pull circuits two neutralizing condensers are used, as shown in Fig. 416. In these circuits, the grid-plate capacities of the tubes and the neutralizing capacities form a capacity bridge (§ 2-11) which is independent of the grid and plate tank circuits. The neutralizing capacities are approximately the same as the tube grid-plate capacities. With electrically similar tubes and symmetrical construction (stray capacities to ground equal on both sides of the circuit), the neutralization is complete and independent of frequency. A circuit using a balanced condenser, as at B, is preferred, since it is an aid in obtaining good circuit balance.

Frequency effects — The effects of slight dissymmetry in a neutralized circuit become more important as the frequency is raised, and may be sufficient at the very-high frequencies (or even lower) to prevent good neutralization. At these frequencies the inductances and stray capacities of even short leads become important elements in the circuit, while input loading effects (§ 7-6) may make it impossible to get proper phasing, particularly in single-tube circuits. In such cases the use of a push-pull amplifier, with its general freedom from the effects of dissymmetry, is not only much to be preferred but may be the only type of circuit which can be satisfactorily neutralized.

Neutralizing condensers — In most cases the neutralizing voltage will be equal to the r.f. voltage between the plate and grid of the tube, so that for perfect balance the capacity required in the neutralizing condenser theoretically will be equal to the grid-plate capacity. If, in the circuits having tapped tank coils, the tap is more than half the total number of turns from the plate end of the coil, the required neutralizing capacity will increase approximately in proportion to the relative number of turns in the two sections of the coil.

With tubes having grid and plate connections brought out through the bulb, a condenser having at about half-scale or less a capacity equal to the grid-plate capacity of the tube should be chosen. If the grid and plate leads are brought through a common base the capacity needed is greater, because the tube socket and its associated wiring adds some capacity to the actual interelement capacities. When two or more tubes are connected in parallel, the neutralizing capacity required will be in proportion to the number of tubes.

The voltage rating of neutralizing condensers must at least equal the r.f. voltage across the condenser plus the sum of the d.c. plate voltage and the grid-bias voltage.

Neutralizing procedure — The procedure in neutralizing is essentially the same for all tubes and circuits. The filament of the tube should be lighted and excitation from the pre-

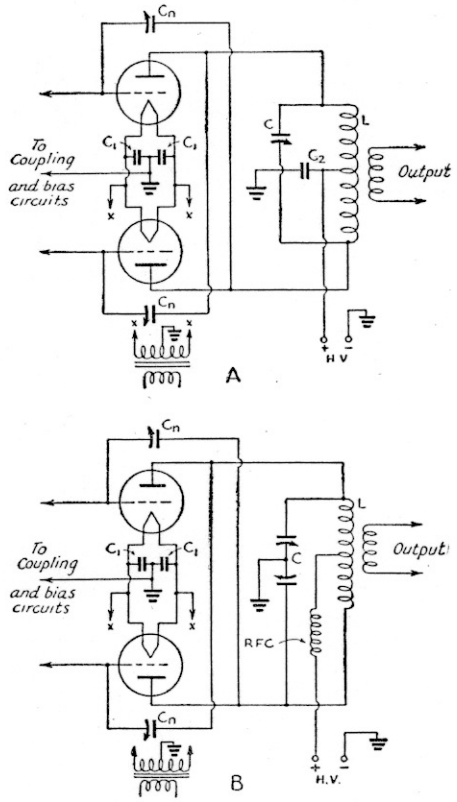

Fig. 416 — "Cross-neutralized" push-pull r.f. amplifier circuits. Either capacitive or link coupling may be used.
C-L — See § 4-8. C_n — Neutralizing condensers.
C_1 — 0.01 μfd. C_2 — 0.001 μfd. or larger.

ceding stage fed to the grid circuit. There should be no plate voltage on the amplifier.

The grid-circuit milliammeter makes a good neutralizing indicator. If the circuit is not completely neutralized, tuning of the plate tank circuit through resonance will change the tuning of the grid circuit and affect its loading, causing a change in the rectified d.c. grid current. The setting of the neutralizing condenser which leaves the grid current unaffected as the plate tank is tuned through resonance is the correct one. If the circuit is out of neutralization, the grid current will drop perceptibly as the plate tank is tuned through resonance. As the point of neutralization is approached, by adjusting the neutralizing capacity in small steps the dip in grid current as the plate condenser is swung through resonance will become less and less pronounced, until, at exact neutralization, there will be no dip at all. Further change of the neutralizing capacity in the same direction will bring the grid-current dip back. The neutralizing condenser should always be adjusted with a screwdriver of insulating material to avoid hand-capacity effects.

Adjustment of the neutralizing condenser may affect the tuning of the grid tank or driver plate tank, so both circuits should be retuned each time a change is made in neutralizing capacity. In neutralizing a push-pull amplifier the neutralizing condensers should be adjusted together, step by step, keeping their capacities as equal as possible.

With single-ended circuits having split-stator neutralizing, the behavior of the grid meter will depend somewhat upon the type of tube used. If the tube output capacity is not great enough to upset the balance, the action of the meter will be the same as in other circuits. With high-capacity tubes, however, the meter usually will show a gradual rise and fall as the plate tank is tuned through resonance, reaching a maximum right at resonance when the circuit is properly neutralized.

When an amplifier is not neutralized a neon bulb touched to the plate of the amplifier tube or to the plate side of the tuning condenser will glow when the tank circuit is tuned through resonance, providing the driver has sufficient power. The glow will disappear when the amplifier is neutralized. However, touching the neon bulb to such an ungrounded point in the circuit may introduce enough stray capacity to unbalance the circuit slightly, thus upsetting the neutralizing.

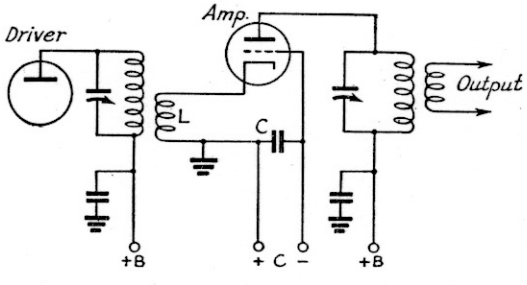

Fig. 417 — Inverted amplifier. The number of turns at *L* should be adjusted by experiment to give optimum grid excitation. By-pass condenser *C* is 0.001 μfd. or larger.

A flashlight bulb connected in series with a single-turn loop of wire 2½ or 3 inches in diameter, with the loop coupled to the tank coil, also will serve as a neutralizing indicator. Capacitive unbalance can be avoided by coupling the loop to the low-potential part of the tank coil.

Incomplete neutralization — If a setting of the neutralizing condenser can be found which gives minimum r.f. current in the plate tank circuit without completely eliminating it, there may be magnetic or capacity coupling between the input and output circuits external to the tube itself. Short leads in neutralizing circuits are highly desirable, and the input and output inductances should be so placed with respect to each other that magnetic coupling is minimized. Usually this requires that the axes of the coils must be at right angles to each other. In some cases it may be necessary to shield the input and output circuits from each other. Magnetic coupling can be detected by disconnecting the plate tank from the remainder of the circuit and testing for r.f. in it (by means of the flashlight lamp and loop) as the tank condenser is tuned through resonance. The driver stage must be operating while this is done, of course.

With single-ended amplifiers there are many stray capacities left uncompensated for in the neutralizing process. With large tubes, especially those having relatively high interelectrode capacities, these commonly neglected stray capacities can prevent perfect neutralization. Symmetrical arrangement of a push-pull stage is about the only way to obtain practically perfect balance throughout the amplifier.

The neutralization of tubes with extremely low grid-plate capacity, such as the 6L6, is often difficult, since it frequently happens that the wiring itself will introduce sufficient capacity between the right points to "overneutralize" the grid-plate capacity. The use of a neutralizing condenser only aggravates the condition. Inductive or link neutralization, as shown in Fig. 415, has been used successfully with such tubes.

The inverted amplifier — The circuit of Fig. 417 avoids the necessity for neutralization by operating the control grid of the tube at ground potential, thus making it serve as a shield between the input and output circuits. It is particularly useful with tubes of low grid-plate capacity, which are difficult to neutralize by ordinary methods. Excitation is applied between grid and cathode through the coupling coil, *L*; since this coil is common to both the plate and grid circuits the amplifier is degenerative with the circuit constants normally used, hence more excitation voltage and power are required for a given output than is the case with a neutralized amplifier. The

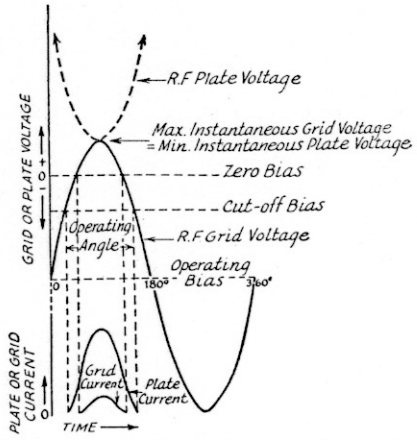

Fig. 418 — Instantaneous voltages and currents in a Class-C amplifier operating under optimum conditions.

tube used must have low plate-cathode capacity (of the order of 1 $\mu\mu$fd. or less) since larger values will give sufficient feed-back to permit it to oscillate, the circuit then becoming the ultraudion (§ 3-7). Tubes having sufficiently low plate-cathode capacity (audio pentodes, for example) can be used without danger of oscillation at frequencies up to 30 Mc. or so.

¶ 4-8 Power Amplifier Operation

Efficiency — An r.f. power amplifier is usually operated Class-C (§ 3-4) to obtain a reasonably high value of plate efficiency (§ 3-3). The higher the plate efficiency the higher the power input that can be applied to the tube without exceeding the plate dissipation rating (§ 3-2), up to the limits of other tube ratings (plate voltage and plate current). Plate efficiencies of the order of 75 per cent are readily obtainable at frequencies up to the 30–60-Mc. region. The *overall* efficiency of the amplifier will be lower by the power lost in the tank and coupling circuits, so that the actual efficiency is less than the plate efficiency.

Operating angle — The operating angle is the proportionate part of the exciting grid-voltage cycle (§ 2-7) during which plate current flows, as shown in Fig. 418. For Class-C operation, it is usually in the vicinity of 120–150 degrees. With other operating considerations, this angle results in an optimum relationship between plate efficiency and grid driving power.

Load impedance — The load impedance (§ 3-3) for an r.f. power amplifier is adjusted, by tuning the plate tank circuit to resonance, to represent a pure resistance at the operating frequency (§ 2-10). Its value, which usually is in the neighborhood of a few thousand ohms, is adjusted by varying the loading on the tank circuit, closer coupling to the load giving lower values of load resistance and vice versa (§ 2-11). The load may be either the grid circuit of a following stage or the antenna circuit.

For highest efficiency the value of load resistance should be relatively high, but if only limited excitation voltage is available greater power output will be secured by using a lower value of load resistance. The latter adjustment is accompanied by a decrease in plate efficiency. The optimum load resistance is that which, for the maximum permissible peak plate current, causes the minimum instantaneous plate voltage (Fig. 418) to be equal to the maximum instantaneous grid voltage required to cause the peak plate current to flow; this gives the optimum ratio of plate efficiency to required grid driving power.

R.f. grid voltage and grid bias — For most tubes optimum operating conditions result when the minimum instantaneous plate voltage is 10 to 20 per cent of the d.c. plate voltage, so that the maximum instantaneous positive grid voltage must be approximately the same figure. Since plate current starts flowing when the instantaneous voltage reaches the cut-off value (§ 3-2), the d.c. grid voltage must be considerably higher than cut-off to confine the operating angle to 150 degrees or less (with grid bias at cut-off, the angle would be 180 degrees). For an angle of 120 degrees, the r.f. grid voltage must reach 50 per cent of its peak value (§ 2-7) at the cut-off point. The corresponding figure for an angle of 150 degrees is 25 per cent. Hence, the operating bias required is the cut-off value plus 25 to 50 per cent of the peak r.f. grid voltage. These relations are shown in Fig. 418. The grid bias should be at least twice cut-off if the amplifier is to be plate modulated, so that the operating angle will be not less than 180 degrees when the plate voltage rises to twice the steady d.c. value (§ 5-3). Because of their relatively high amplification factors, with most modern tubes Class-C operation requires considerably more than twice cut-off bias to make the operating angle fall in the region mentioned above. Suitable operating conditions are usually given in the data accompanying the type of tube used.

Grid bias may be secured either from a bias source (*fixed bias*), a grid leak (§ 3-6) of suitable value, or from a combination of both. When a bias supply is used, its voltage regulation should be taken into consideration (§ 8-9).

Driving power — As indicated in Fig. 418, grid current flows only during a small portion of the peak of the r.f. grid voltage cycle. The power consumed in the grid circuit therefore is approximately equal to the peak r.f. grid voltage multiplied by the average rectified grid current as read by a d.c. milliammeter. The peak r.f. grid voltage, if not included in the tube manufacturer's operating data, can be estimated roughly by adding 10 to 20 per cent of the plate voltage to the operating grid bias, assuming the operating conditions are as described above.

At frequencies up to 30 Mc. or so, the grid losses are practically entirely those resulting from grid-current flow. At the very-high frequencies, however, dielectric losses in the glass envelope and base materials become appre-

ciable, together with losses caused by transit-time effects (§ 7-6), and may necessitate supplying several times the driving power indicated above. At any frequency, the driving stage should be capable of a power output two to three times the power it is expected the grid circuit of the amplifier will consume. This is necessary because losses in the tank and coupling circuits must also be supplied, and also to provide reasonably good regulation of the r.f. grid voltage. Good voltage regulation (see § 8-1 for general definition) insures that the waveform of the excitation voltage will not be distorted because of the changing load on the driver during the r.f. cycle.

Grid impedance — During most of the r.f. grid-voltage cycle no grid current is flowing, as indicated in Fig. 418, hence the grid impedance is infinite. During the peak of the cycle, however, the impedance may drop to very low values (of the order of 1000 ohms), depending upon the type of tube. Both the minimum and average values of grid impedance depend to a considerable extent on the amplification factor of the tube, being lower with tubes having large amplification factors.

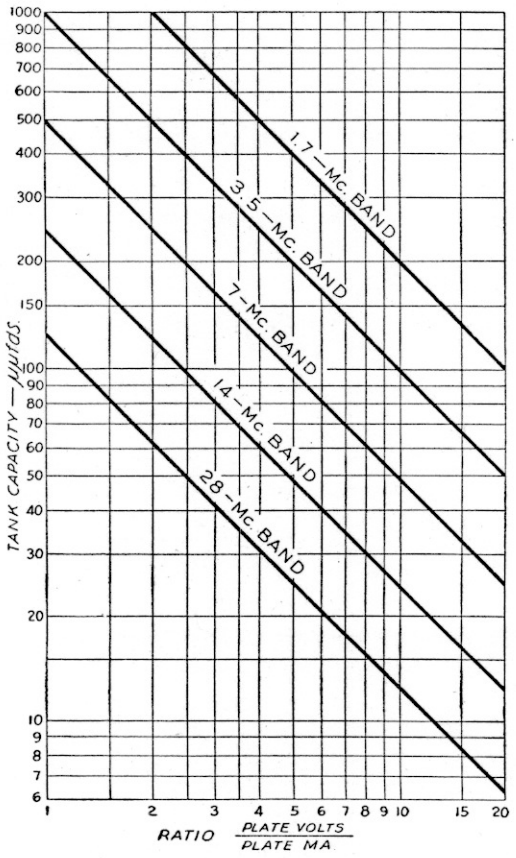

Fig. 419 — Chart showing tank capacities required for a Q of 12 with various ratios of plate voltage to plate current, for various frequencies. In circuits F, G, H (Fig. 420), the capacities shown in the graph may be divided by four. In circuits C, D, E, I, J and K, the capacity of each section of the split-stator condenser may be one-half that shown by the graph. The values given by the graph should be used for circuits A and B.

The average grid impedance is equal to E^2/P, where E is the r.m.s. (§ 2-7) value of r.f. grid voltage and P is the grid driving power. Under optimum operating conditions, values of average grid impedance ranging from 2000 ohms for high-μ tubes to four or five times as much for low-μ types are representative. Values in the vicinity of 4000 to 5000 ohms are typical of modern triodes with amplification factors of 20 to 30.

Because of the large change in impedance during the cycle it is necessary that the tank circuit associated with the amplifier grid have fairly high Q, so that the voltage regulation over the cycle will be good. The requisite Q may be obtained by adjusting the L/C ratio or by tapping the grid circuit across only part of the tank (§ 4-6).

Tank-circuit Q — Besides serving as a means for transforming the actual load resistance to the required value of plate load impedance for the tube, the plate tank circuit also should suppress the harmonics present in the tube output as a result of the non-sinusoidal plate current (§ 2-7, 3-3). For satisfactory harmonic suppression, a Q of 12 or more (with the circuit fully loaded) is desirable. A Q of this order also is helpful from the standpoint of securing adequate coupling to the load or antenna circuit (§ 2-11). The proper Q can be obtained by suitable selection of L/C ratio in relation to the optimum plate load resistance for the tube (§ 2-10).

For a Class-C amplifier operated under optimum conditions as described above, the plate load impedance is approximately proportional to the ratio of d.c. plate voltage to d.c. plate current. For a given effective Q the tank capacity required at a given frequency will be inversely proportional to the parallel resistance (§ 2-10), so that it will also be inversely proportional to the plate-voltage/plate-current ratio. The capacity required on various amateur bands for a Q of 12 is shown in Fig. 419 as a function of this ratio. The capacity given is for single-ended tank circuits, as shown in Fig. 420 at A and B. When a balanced tank circuit is used the total tank capacity required is reduced to one-fourth this value, because the tube is connected across only half the circuit (§ 2-9). Thus, if the plate-voltage/plate-current ratio calls for a capacity of 200 $\mu\mu$fd. in a single-ended circuit at the desired frequency, only 50 $\mu\mu$fd. would be needed in a balanced circuit. If a split-stator or balanced tank condenser is used each section should have a capacity of 100 $\mu\mu$fd., the total capacity of the two in series being 50 $\mu\mu$fd. These are "in use" capacities, not simply the rated maximum capacity of the condenser. Larger values may be used with an increase in the effective Q.

To reduce energy loss in the tank circuit, the inherent Q of the coil and condenser should be high. Since transmitting coils usually have Qs

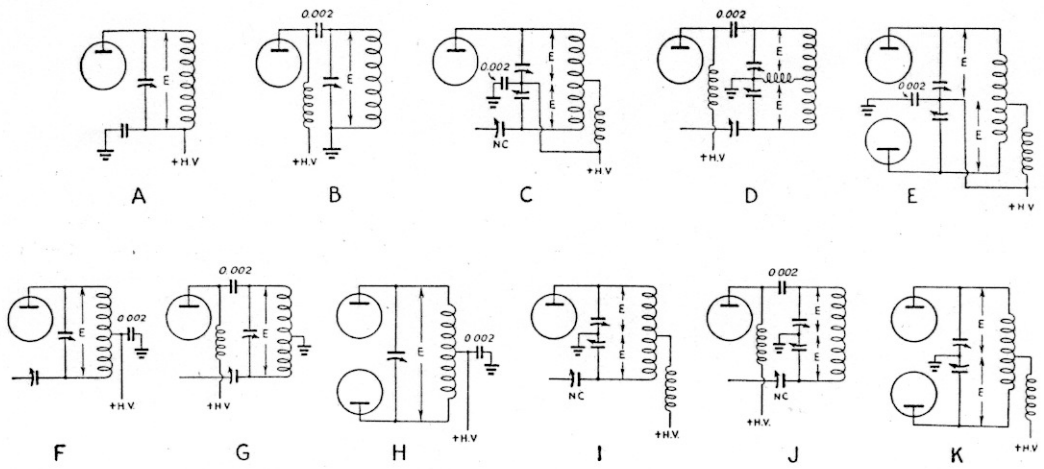

Fig. 420 — In circuits A, B, C, D and E, the peak voltage *E* will be approximately equal to the d.c. plate voltage applied for c.w. or twice this value for 'phone. In circuits F, G, H, I, J and K, *E* will be twice the d.c. plate voltage for c.w. or four times the plate voltage for 'phone. The circuit is assumed to be fully loaded. Tubes in parallel in any of the circuits will not affect the peak voltage. Circuits A, C, E, F, G and H require that the tank condenser be insulated from chassis or ground and that it be provided with a suitably insulated shaft coupling for tuning.

ranging from 100 to several hundred, the tank transfer efficiency generally is 90 per cent or more. An unduly large C/L ratio is not advisable since it will result in large circulating r.f. tank current and hence relatively large losses in the tank, with a consequent reduction in the power available for the load.

Tank constants — When the capacity necessary for a Q of 12 has been determined from Fig. 419, the inductance required to resonate at the given frequency can be found by means of the formula in § 2-10. Alternatively, the required number of turns on coils of various construction can be found from the charts of Figs. 421 and 422.

Fig. 421 is for coils wound on receiving-type forms having a diameter of 1½ inches and ceramic forms having a diameter of 1¾ inches and winding length of 3 inches. Such coils would be suitable for oscillator and buffer stages where the power is not over 50 watts. In all cases, the number of turns given must be wound to fit the length indicated and the turns should be evenly spaced.

Fig. 422 gives data on coils wound on transmitting-type ceramic forms. In the case of the smallest form, extra curves are given for double spacing (winding turns in alternate grooves). This is sometimes advisable in the case of 14- and 28-Mc. coils when only a few turns are required. In all other cases, the specified number of turns should be wound in the grooves without any additional spacing.

Ratings of components — The peak voltage to be expected between the plates of a tank condenser depends upon the arrangement of the tank circuit as well as the d.c. plate voltage. Peak voltage may be determined from Fig. 420, which shows all of the commonly used tank-circuit arrangements. These estimates assume that the amplifier is fully loaded; the voltage will rise considerably should the amplifier be operated without load. The figures include a reasonable factor of safety.

The condenser plate spacing required to withstand any particular voltage will vary with the construction. Most manufacturers specify peak-voltage ratings in describing their condensers.

Plate or screen by-pass condensers of 0.001 μfd. should be satisfactory for frequencies as low as 1.7 Mc. Cathode-resistor and filament by-passes in r.f. circuits should be not less than 0.01 μfd. Fixed condensers used for these purposes should have voltage ratings 25 to 50 per cent greater than the maximum d.c. or a.c. voltage across them.

Interstage coupling condensers should have voltage ratings 50 to 100 per cent greater than the sum of the driver plate and amplifier grid-biasing voltages.

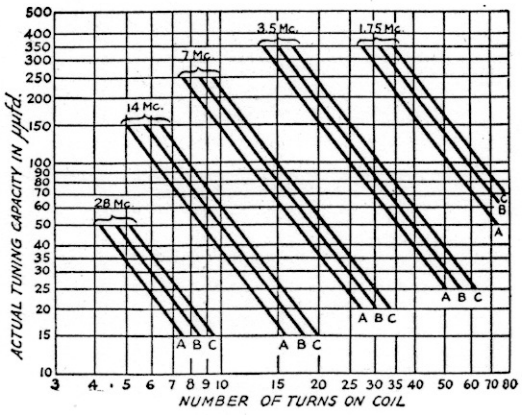

Fig. 421 — Coil-winding data for receiving-type forms, diameter 1½ inches. Curve A — winding length, 1 inch; Curve B — winding length, 1½ inches; Curve C — winding length, 2 inches. Curve C is also suitable for coils wound on 1¾-inch diameter transmitting-type ceramic forms with 3 inches of winding length.

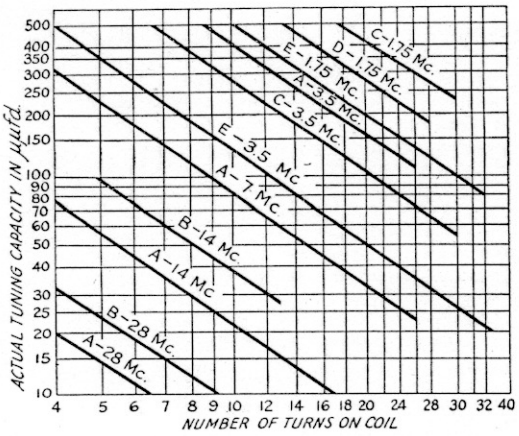

Fig. 422 — Coil-winding data for ceramic transmitting-type forms. Curve A — ceramic form 2½-inch effective diameter, 26 grooves, 7 per inch; Curve B — same as A, but with turns wound in alternate grooves; Curve C — ceramic form 2⅞-inch effective diameter, 32 grooves, 7.1 turns per inch, approximately; Curve D — ceramic form 4-inch effective diameter, 28 grooves, 5.85 turns per inch, approximately; Curve E — ceramic form 5-inch effective diameter, 26 grooves, 7 per inch. Coils may be wound with either No. 12 or No. 14 wire.

¶ 4-9 Adjustment of Power Amplifiers

Excitation — The effectiveness of adjustments to the coupling between the driver plate and amplifier grid circuits can be gauged by the relative values of amplifier rectified grid current and driver plate current, the object being to obtain maximum grid current with minimum driver loading. The amplifier grid circuit represents the load on the driver, and the average grid impedance must be transformed to the value for optimum driver operation (§ 4-8).

With capacity coupling, either the driver plate or amplifier grid must be tapped down on the driver tank coil, as shown in Fig. 410 at A and B, unless the grid impedance is approximately the right value for the driver plate load, when it will be satisfactory to connect both elements to the end of the tank. If the grid impedance is lower than the required driver plate load, Fig. 410-A is used; if higher, Fig. 410-B. In either case, the coupling which gives the desired grid current with minimum driver loading should be determined experimentally by moving the tap. Should both plate and grid be connected to the end of the circuit it is sometimes possible to control the loading, when the grid impedance is low, by varying the capacity of the coupling condenser, *C*, but this method is not altogether satisfactory since it is simply an expedient to prevent driver overloading without giving suitable impedance matching.

In push-pull circuits the method of adjustment is similar, except that the taps should be kept symmetrically located with respect to the center of the tank circuit.

With link coupling, Fig. 411, the object of adjustment is the same. The two tanks are first tuned to resonance, as indicated by maximum grid current, and the coupling adjusted by means of the links (§ 4-6) to give maximum grid current with minimum driver plate current. This usually will suffice to load the driver to its rated output, provided the driver plate and amplifier grid tank circuits have reasonable values of *Q*. If the *Q* of one or both of the circuits is too low, it may not be possible to load the driver fully with any adjustment of link turns or coupling at either tank. In such a case, the *Q*s of the tank circuits must be increased to the point where adequate coupling is secured. If the driver plate tank is designed to have a *Q* of 12, the difficulty almost invariably is in the amplifier grid tank. The *Q* can be increased to a suitable value by adjustment of the L/C ratio or by tapping the load across part of the coil (§ 2-10).

Whatever the type of coupling, a preliminary adjustment should be made with the proper bias voltage and/or grid leak, but with the amplifier plate voltage off; then the amplifier should be carefully neutralized. After neutralization the driver-amplifier coupling should be readjusted for optimum power transfer, after which plate voltage may be applied and the amplifier plate circuit adjusted to resonance and coupled to its load. Under actual operating conditions the grid current decreases below the value obtained without plate voltage on the amplifier and the effective grid impedance rises, hence the final adjustment is to re-check the coupling to take care of this shift.

With recommended bias, the grid current obtained before plate voltage is applied to the amplifier should be 25 to 30 per cent higher than the value required for operating conditions. If this value is not obtained, and the driver plate input is up to rated value, the reason may be either improper matching of the amplifier grid to the driver plate or simply insufficient power output from the driver to take care of all losses. Driver operating voltages should be checked to assure they are up to rated values. If batteries are used for bias and are not strictly fresh, they should be replaced, since batteries which have been in use for some time often develop high internal resistance which effectively acts as additional grid-leak resistance. If a rectified a.c. bias supply is used, the bleeder or voltage-divider resistances should be checked to make certain that low grid current is not caused by greater grid-circuit resistance than is recommended. In this connection it is helpful to measure the actual bias when grid current is flowing, by means of a high-resistance d.c. voltmeter. There is also the possibility of loss of filament emission of the amplifier tube, either from prolonged service or from operating the filament under or over the rated voltage.

Plate tuning — In preliminary tuning, it is desirable to use low plate voltage to avoid possible damage to the tube. With excitation and plate voltage applied, rotate the plate tank condenser until the plate current dips. Then set the condenser at the minimum plate-current

point (resonance). When the resonance point has been found, the plate voltage may be increased to its normal value.

With adequate excitation, the off-resonance plate current of a triode amplifier may be two or more times the normal operating value. With screen-grid tubes the off-resonance plate current may not be much higher than the normal operating value, since the plate current is principally determined by the screen rather than the plate voltage.

Under reasonably efficient operating conditions the minimum plate current with the amplifier unloaded will be a small fraction of the rated plate current for the tube (usually a fifth or less), since with no load the parallel impedance of the tank circuit is high. If the excitation is low the "dip" will not be very marked, but with adequate excitation the plate current at resonance without loading will be just high enough so that the d.c. plate power input supplies all the losses in the tube and circuit. As an indication of probable efficiency, the minimum plate current value should not be taken too seriously, because without load the Q of the circuit is high and the tank current relatively large. When the amplifier is delivering power to a load, the circulating current drops considerably and the tank losses correspondingly decrease. High minimum unloaded plate current is chiefly encountered at 28 Mc. and above, where tank losses are higher and the tank L/C ratio is usually lower than normal because of irreducible tube capacities. The effect is particularly noticeable with screen-grid tubes, which have relatively high output capacity. Because of the decrease in tank r.f. current with loading, however, the actual efficiency under load is reasonably good.

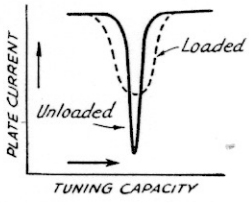

Fig. 423 — Typical behavior of d.c. plate current vs. tuning capacity in the plate circuit of an amplifier.

With the load (antenna or following amplifier grid circuit) connected, the coupling between plate tank and load should be adjusted to make the tube take rated plate current, keeping the tank always tuned to resonance. As the output coupling is increased the minimum plate current also will increase, about as shown in Fig. 423. Simultaneously the tuning becomes less sharp, because of the increase in effective resistance of the tank. If the load circuit simulates a resistance, the resonance setting of the tank condenser will be practically unchanged with loading; this is generally the case, since the load circuit usually is also tuned to resonance. A reactive load (such as an antenna or feeder system not tuned exactly to resonance) may cause the tank condenser setting to change with loading, since reactance as well as resistance is coupled into the tank (§ 2-11).

Power output — As a check on the operation of an amplifier, its power output may be measured by the use of a load of known resistance, coupled to the amplifier output as shown in Fig. 424. At A a thermoammeter, M, and a non-inductive (ordinary wire-wound resistors are not satisfactory) resistance, R, are connected across a coil of a few turns coupled to the amplifier tank coil. The higher the resistance of R, the greater the number of turns required in the coupling coil. A resistor used in this way is generally called a "dummy antenna," since its use permits the transmitter to be adjusted without actually radiating power. The loading may readily be adjusted by varying the coupling between the two coils, so that the amplifier draws rated plate current when tuned to resonance. The power output is then calculated from Ohm's Law:

$$P \text{ (watts)} = I^2R$$

where I is the current indicated by the thermoammeter and R is the resistance of the non-inductive resistor. Special resistance units are available for this purpose, ranging from 73 to 600 ohms (simulating antenna and transmission-line impedances) at power ratings up to 100 watts. For higher powers, the units may be connected in series-parallel. The meter scale required for any expected value of power output may also be determined from Ohm's Law:

$$I = \sqrt{\frac{P}{R}}$$

Incandescent light bulbs can be used to replace the special resistor and thermoammeter. The lamp should be equipped with a pair of leads, preferably soldered to the terminals on the lamp base. The coupling should be varied

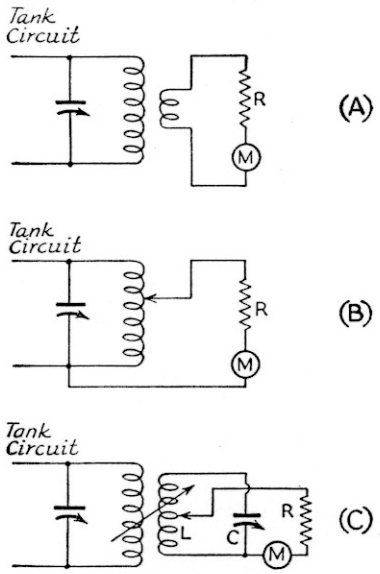

Fig. 424 — "Dummy antenna" circuits for checking power output and making operating adjustments under load without applying power to the actual antenna.

until the greatest brilliance is obtained for a given plate input. In using lamps as dummy antennas a size corresponding to the expected power output should be selected, so that the lamp will operate near its normal brilliancy. Then, when the adjustments have been completed, an approximation of the power output can be obtained by comparing the brightness of the lamp with the brightness of one of similar power rating in a 115-volt socket.

The circuit of Fig. 424-B is for resistors or lamps of relatively high resistance. In using this circuit, care should be taken to avoid accidental contact with the plate tank when the power is on. This danger is avoided by circuit C, in which a separate tank circuit, *LC*, tuned to the operating frequency, is coupled to the plate tank circuit. The loading is adjusted by varying the number of turns across which the dummy antenna is connected on *L* and by changing the coupling between the two coils. With push-pull amplifiers, the dummy antenna should be tapped equally on either side of the center of the tank when the circuit of Fig. 424-B is used.

Harmonic suppression — The most important step in the elimination of harmonic radiation (§ 4-8, 2-12) is to use an output tank circuit having a *Q* of 12 or more. Beyond this it is desirable to avoid any considerable amount of over-excitation of a Class-C amplifier, since excitation in excess of that required for normal Class-C operation further distorts the plate-current pulse and increases the harmonic content in the output of the amplifier even though the proper tank *Q* is used. If the antenna system in use will accept harmonic frequencies they will be radiated when distortion is present, and consequently the antenna coupling system preferably should be selected with harmonic transfer in mind (§ 10-6).

Harmonic content can be reduced to some extent by preventing distortion of the r.f. grid-voltage waveshape. This can be done by using a grid tank circuit with high effective *Q*. Link coupling between the driver and final amplifier are helpful, since the two tank circuits provide more attenuation than one at the harmonic frequencies. However, the advantages of link coupling in this respect may be nullified unless the *Q* of the grid tank is high enough to give good voltage regulation, which minimizes harmonic transfer and thus prevents distortion in the grid circuit.

The stray capacity between the antenna coupling coil and the tank coil may be sufficient to couple harmonic energy into the antenna system. This coupling may be eliminated by the use of electrostatic shielding (*Faraday shield*) between the two coils. Fig. 425 shows the construction of such a shield, while Fig. 426 illustrates the manner in which it is installed. The construction shown in Fig. 425 prevents current flow in the shield, which would occur if the wires formed closed circuits since the shield is in the magnetic field of the tank coil.

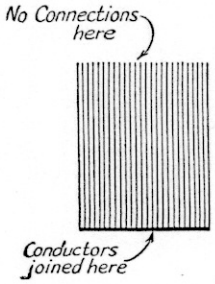

Fig. 425 — The Faraday electrostatic shield for eliminating capacitive transfer of harmonic energy. It is made of parallel conductors, insulated from each other except at one end where all are joined. Stiff wire or small diameter rod may be used, spaced about the diameter of the wire or rod.

Should this occur, there would be magnetic shielding as well as electrostatic; in addition, there would be a power loss in the shield.

Improper operation — Inexact neutralization or stray coupling between plate and grid circuits may result in regeneration. This effect is most evident with low excitation, when the amplifier will show a sudden increase in output when the plate tank circuit is tuned slightly to the high-frequency side of resonance. It is accompanied by a pronounced increase in grid current.

Self-oscillation is apt to occur with tubes of high power sensitivity, such as the r.f. pentodes and tetrodes. In event of either regeneration or oscillation, circuit components should be arranged so that those in the plate circuit are well isolated from those of the grid circuit. Plate and grid leads should be made as short as possible and the screen should be by-passed as close to the socket terminal as possible. A cylindrical shield surrounding the lower portion of the tube up to the lower edge of the plate is sometimes required.

"Double resonance," or two tuning spots on the plate-tank condenser, one giving minimum plate current and the other maximum power output, may occur when the tank circuit *Q* is too low (§ 2-10). A similar effect also occurs at times with screen-grid amplifiers when the screen-voltage regulation (§ 8-1) is poor, as when the screen is supplied through a dropping resistor. The screen voltage decreases with an increase in plate current, because the screen current increases under the same conditions. Thus the minimum plate-current point causes the screen voltage, and hence the power output, to be less than when a slightly higher plate current is drawn.

A phenomenon known as "grid emission" may occur when the amplifier tube is operated at higher than rated power dissipation on either the plate or grid. It is particularly likely to occur with tubes having oxide-coated cathodes, such as the indirectly heated types. It is caused by the grid reaching a temperature high enough to cause electron emission (§ 2-4). The electrons so emitted are attracted to the plate, further increasing the power input and heating, so that grid emission is characterized by gradually increasing plate current and heat which eventually will ruin the tube if the power is not removed. Grid emission can be prevented by operating the tube within its ratings.

4-10 Parasitic Oscillations

Description — If the circuit conditions in an oscillator or amplifier are such that self-oscillation exists at some frequency other than that desired, the spurious oscillation is termed *parasitic*. The energy required to maintain a parasitic oscillation is wasted so far as useful output is concerned, hence an oscillator or amplifier having parasitics will operate at reduced efficiency. In addition, its behavior at the operating frequency often will be erratic. Parasitic oscillations may be either higher or lower in frequency than the operating frequency.

The parasitic oscillation usually starts the instant plate voltage is applied, or, when the amplifier is biased beyond cut-off, at the instant excitation is applied. In the latter case, the oscillation frequently will be self-sustaining after the excitation has been removed. At other times the oscillation may not be self-sustaining, becoming active only in the presence of excitation. It may be apparent only by the production of abnormal key clicks (§ 6-1) over a wide frequency range, or by the presence of spurious side-bands (§ 5-2) with 'phone modulation.

Low-frequency parasitics — Parasitic oscillations at low frequencies (usually 500 kc. or less) are of the tuned-plate tuned-grid type, the tuned circuits being formed by r.f. chokes and associated by-pass and coupling condensers, with the regular tank tuning condensers having only a minor effect on the oscillation. The operating-frequency tank coil has negligible inductance for such low frequencies and may be short-circuited without affecting the oscillations. The oscillations do not occur when no r.f. chokes are used, hence whenever possible in series-fed circuits such chokes should be omitted. With single-ended amplifiers, it is usually possible to arrange the circuit so that either the grid or plate circuit needs no choke. In push-pull stages, where chokes must be used in both plate and grid circuits, it is helpful to connect an unby-passed grid leak from the choke to the bias supply or ground, thus placing the resistance in the parasitic circuit and tending to prevent oscillation. When the driver plate circuit has parallel feed and the amplifier grid circuit series feed (§ 3-7) this type of oscillation cannot occur if no choke is used in the series grid circuit, since the grid is grounded through the tank coil for the parasitic frequency.

Parasitics near operating frequency — In circuits utilizing a tap on the plate tank coil to establish a ground for a balanced neutralizing circuit, such as Fig. 413-B, a parasitic oscillation may be set up if the amplifier grid is tapped down on the grid (or driver plate) tank circuit for adjustment of driver-amplifier coupling (§ 4-6). In this case the turns between grid and ground and between plate and ground form, with the stray and other capacities present, a t.p.t.g. circuit (§ 3-7) which oscillates at a frequency somewhat higher than the nominal operating frequency. Such an oscillation can be prevented by dispensing with the taps in either the plate or grid circuit. Balancing the plate circuit by means of a split-stator condenser (Fig. 413-C) is recommended.

Very-high-frequency parasitics — Parasitics in the v.h.f. region are likely to occur with any amplifier having a balanced tank circuit, particularly when associated with neutralizing connections. The parasitic circuit, formed by leads connecting the various components, may be either the t.p.t.g. or ultraudion type.

The frequency of such oscillations may be determined by connecting a tuned circuit in series with the grid lead to the tube. A variable condenser (50 or 100 $\mu\mu$fd.) may be used, in conjunction with three or four self-supporting turns of heavy wire wound into a coil an inch or so in diameter. With the amplifier oscillating at the parasitic frequency, the condenser is slowly tuned through its range until oscillations cease. If this point is not found on the first trial, the turns of the coil may be spread apart or a turn removed and the process repeated. The use of such a tuned circuit as a trap is an almost certain remedy if the frequency can be determined, and introduces little if any loss at the operating frequency.

An alternative cure, which is feasible when the oscillation is of the t.p.t.g. type, is to detune the parasitic circuit in either the plate or grid circuit. Since this type of oscillation occurs most frequently with push-pull amplifiers, it may often be cured by making the grid and plate leads to their respective tank circuits of considerably different length. Similar considerations apply to neutralizing connections in push-pull circuits. The extra wire length may be coiled up in the form of a so-called "choke," which in this case is simply additional inductance for detuning the parasitic circuit.

Testing for parasitic oscillations — An amplifier always should be tested for parasitic oscillations before being considered ready for service. The preferable method is first to neutralize the amplifier, then apply sufficient fixed bias to permit a moderate value of plate current to flow without excitation. (The plate current should not be large enough to cause the power input to exceed the rated plate dissipation of the tube.) If the amplifier is free from self-starting parasitics, the plate current

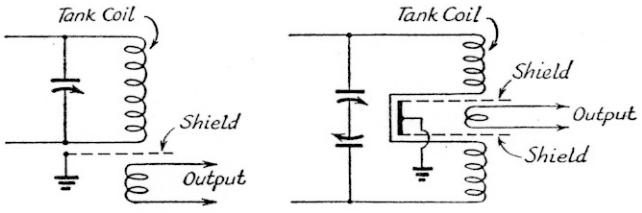

Fig. 426 — Methods of using the Faraday shield. Two are required with a push-pull or balanced tank circuit. The shield should be larger than the diameters of the coupled coils and placed between them so each is isolated from the other.

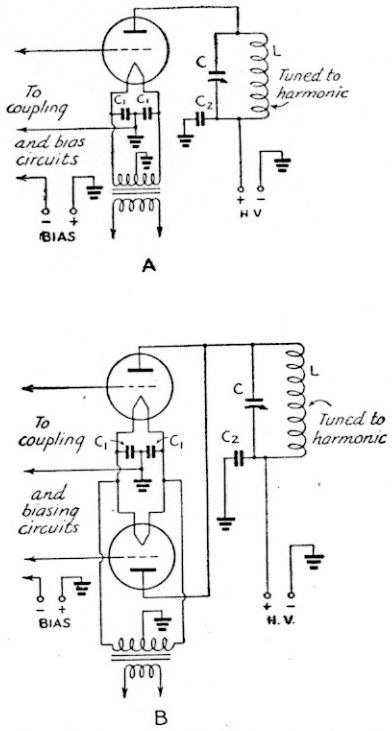

Fig. 427 — Frequency-multiplying circuits. A is for triodes, used either singly or in parallel. The push-push doubler is shown at B. Any type of coupling may be used between the grid circuit and the driver. C_1 should be 0.01 μfd. or larger; C_2, 0.001 μfd. or larger

will remain steady as the tank condensers are varied; also, there will be no grid current and a neon bulb touched either to the plate or grid will show no glow. Care must be used not to let the hand come in contact with any metal parts of the transmitter in using the neon bulb.

If any of these effects are present, the frequency of the parasitic must first be determined. If r.f. chokes are used in both the plate and grid circuits, one of them should be short-circuited to determine if the oscillation is at a low frequency; if so, it may be eliminated by the methods outlined above. If the test indicates that the parasitic is not a low-frequency oscillation, the grid trap described above should be tried for the v.h.f. type. The type which occurs near the operating frequency will not exist unless the plate and grid tank coils are both tapped, hence may be eliminated from consideration if this is not the case in the circuit used. When such an oscillation is present its existence can be detected by moving the grid tap to include the whole tank circuit, whereupon the oscillation will cease.

Some indication of the frequency of the parasitic can be obtained from the color of the glow in the neon bulb. Usually it will be yellowish with low-frequency oscillations and violet with v.h.f. oscillations.

If the amplifier is stable under the conditions described above, excitation should be applied and then removed to ascertain if a self-sustaining oscillation is set up with excitation. If the plate current does not return to the previous value when the excitation is cut off, the same tests should be applied to determine the parasitic frequency.

As a final test, the transmitter should be put on the air and a nearby receiver tuned over as wide a frequency range as possible to locate any off-frequency signals associated with the radiation. Parasitics usually can be recognized by their poor stability as contrasted to the normal harmonics, which will have the same stability as the fundamental signal as well as the usual harmonic relationship. Harmonics should be quite weak compared to the fundamental frequency, whereas parasitic oscillations may have considerable strength.

¶ 4-11 Frequency Multiplication

Circuits — A frequency multiplier is an amplifier having its plate tank circuit tuned to a multiple (harmonic) of the frequency applied to its grid. The difference between a straight amplifier (§ 4-1) and a frequency multiplier is in the way in which it is operated, rather than in the circuit. However, since the grid and plate tank circuits are tuned to different frequencies a triode frequency multiplier will not self-oscillate, hence does not need neutralization. A typical circuit arrangement is shown in Fig. 427-A. For screen-grid multipliers, the circuit is the same as in Fig. 412-A. Under usual conditions the plate efficiency of a frequency multiplier drops off rapidly with an increase in the number of times the frequency is multiplied. For this reason most multipliers are used as *frequency doublers*, giving second harmonic output.

A special circuit for frequency doubling ("push-push" doubler) is shown in Fig. 427-B. The grids of the tubes are in push-pull and the plates in parallel, thus the plate tank receives two pulses of plate current for each cycle of excitation frequency. The circuit is similar to the full-wave rectifier (§ 8-3) where the ripple frequency is twice the applied frequency.

Push-pull amplifiers are suitable for frequency multiplication at odd harmonics, but are unsuited to even harmonic multiplication because the even harmonics are largely balanced out in the tank circuit (§ 3-3).

Operating conditions and circuit constants — To obtain good efficiency the operating angle at the harmonic frequency must be 180 degrees or less, preferably in the vicinity of 150–120 degrees (§ 4-8). In a doubler, this means that plate current should flow during only half this angle of fundamental frequency. Consequently the r.f. grid voltage, operating bias, and grid driving power must be increased considerably beyond the values obtaining for normal Class-C amplification. For comparable plate efficiency the bias will ordinarily be four to five times the normal Class-C bias, and the r.f. grid voltage must be considerably larger to drive the tube to the same peak plate cur-

rent. Since the plate and grid current pulses under these conditions have the same peak amplitudes but only half the time duration as in a straight amplifier, the average d.c. values should be one-half those for normal Class-C operation. That is, a tube operated in this way will have the same plate efficiency as a Class-C amplifier but can be operated at only half the plate input, so that the output power also is halved. The driving power required usually is about twice that for straight-through amplification with the same plate efficiency.

Greater output can be secured by using a larger operating angle (lower grid bias) or lower plate load resistance to increase the plate current, but this is accompanied by a decrease in efficiency. Since operation described in the preceding paragraph is below the maximum plate dissipation rating of the tube, decreased efficiency usually can be tolerated in the interests of securing more power output. In practice, an efficiency of 40 to 50 per cent is average.

The tank circuit should have reasonably high Q (12 is satisfactory) to give good output voltage regulation (§ 4-9), since a plate-current pulse occurs only once every two cycles of output frequency. A low-Q circuit (high L/C ratio) is helpful chiefly when the operating angle is greater than 180 degrees at the second harmonic. Such a tank circuit will have relatively high impedance to the fundamental-frequency component of plate current which is present with large operating angles, and thus aid in reducing the average d.c. plate current.

The grid impedance of a frequency multiplier is considerably higher than that of a straight amplifier, because of the high bias voltage. The average impedance can be calculated as previously described (§ 4-8). The L/C ratio of the grid tank circuit may be higher, therefore, for a given Q. Often it is advantageous to use a fairly high ratio, since a large r.f. voltage must be developed between grid and cathode, so long as it is not made too high (Q too low) to permit adequate coupling between the grid tank circuit and the driver stage. It may be necessary to step up the driver output voltage to obtain sufficient r.f. grid voltage for the doubler; this may be done by tapping the driver plate on its tank circuit, when capacity coupling is used, or by similar tapping or use of a higher C/L ratio in the driver plate tank when the stages are link-coupled (§ 4-6).

Tubes for frequency multiplication — There is no essential difference between tubes of various characteristics in their performance as frequency doublers. Tubes having high amplification factors will require somewhat less bias for equivalent operation but the grid driving power needed is almost independent of the μ, assuming tubes of otherwise similar construction and characteristics. Pentodes and tetrodes will, as in normal amplifier operation, require less driving power than triodes for efficient doubling, although more power will be needed than for straight amplification.

§ 4-12 Very-High-Frequency Oscillators

Linear circuits — At very high frequencies tube interelectrode capacities become of increasing importance, so that eventually the inductance of the shortest possible straight wire connection between elements, in conjunction with internal leads and capacities, represents the highest possible frequency to which the tube can be tuned. The tube usually will not oscillate up to this limit because of dielectric losses in the seals and other loading effects (§ 7-6). With most small tubes of ordinary construction, the upper limit of oscillation is in the region of 150 Mc.; for higher frequencies, special v.h.f. tubes having low interelectrode capacities and low internal lead inductance are used. Only a few types are capable of developing more than a few watts at 300 Mc. and higher.

Although ordinary coil and condenser tank circuits can be used at frequencies as high as 112 Mc., the Q of such circuits is low at very-high frequencies because of increased losses, so that both stability and efficiency are poor. For this reason special tank circuits of the linear type (§ 2-12) are preferable. These may be any multiple of a quarter wave in length, the stability increasing with the number of quarter waves. The quarter-wave line is more generally used, however, because of the considerable space required for longer lines. At 112 Mc. it is also possible to build high-Q tank circuits with lumped constants, not in the form of ordinary coils and condensers but with large conducting surfaces to reduce resistance.

The oscillator circuits used are the same in principle as on the lower frequencies (§ 3-7), although frequently modified considerably to compensate for inherent capacities and inductances which are negligible at lower frequencies.

Two-conductor lines — The quarter-wave two-conductor open line is equivalent to a resonant circuit (§ 2-12) and can be used as the tank circuit (§ 3-7) in an oscillator. It should be used as a balanced circuit to avoid unequal

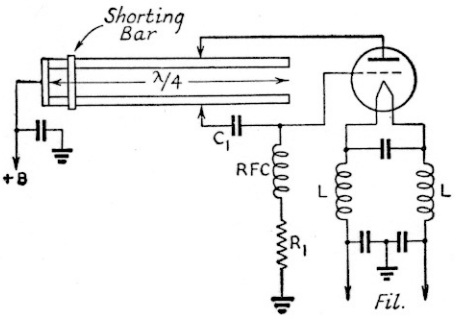

Fig. 428 — **Single-tube line oscillator.** The grid condenser, C_1, may be 50 $\mu\mu$fd.; grid leak, R_1, 5000 to 50,000 ohms depending upon the type of tube. The choke, *RFC*, will in general consist of relatively few turns (20 to 50) wound to a diameter of ¼ inch, although dimensions will change considerably with the frequency. Bypass condensers should be small in physical size, to reduce lead inductance; 500 $\mu\mu$fd. is a satisfactory value.

currents in the two conductors and consequent loss of Q because of radiation.

A typical oscillator circuit of the ultraudion type is shown in Fig. 428. The resonant line is usually constructed of copper tubing to reduce resistance and provide a mechanically stable circuit. The line should be approximately a quarter-wavelength long. Frequency can be changed by moving the shorting bar to change its effective length.

The tube elements preferably should be tapped down on the line, as shown, to reduce the loading effect and thus prevent an undue decrease in Q. These taps should be close to the shorted end of the line, since the frequency stability will be better under these conditions.

The coils in the filament circuit (L) are frequently required at 112 Mc. and higher to compensate for the effects of the inductance of connecting leads, which in many cases are long enough to cause appreciable phase shift (§ 2-7). The effective length of the filament circuit should be approximately ½ wavelength, to bring the filament to the same potential as the shorted ends of the lines. The proper inductance must be determined by experiment, the coils being adjusted for optimum stability and power output.

The oscillation frequency also may be adjusted by connecting a low-capacity variable condenser across the open end of the line. The added capacity makes it necessary to shorten the line considerably for a given frequency, however, and this, together with the additional loss in the condenser, causes a marked decrease in the Q of the line. These effects will be less if the condenser is connected down on the line rather than at the open end. Tapping down also gives greater bandspread effect (§ 7-7).

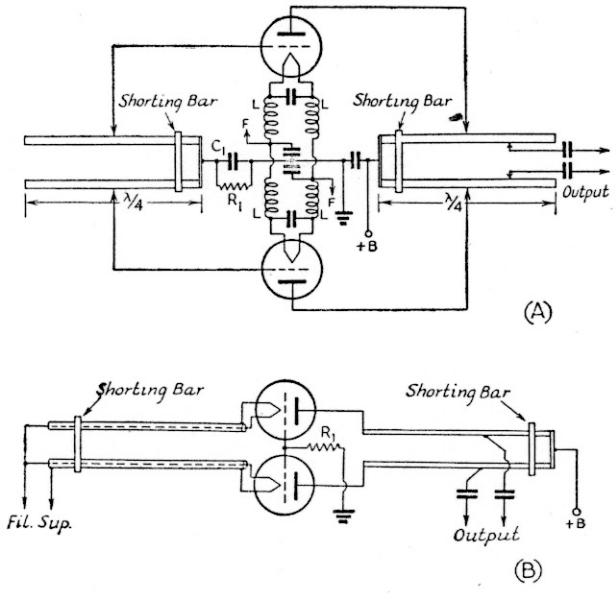

Fig. 429 — Push-pull line oscillators. See Fig. 428 for constants.

Push-pull oscillators — It is often advantageous to use a push-pull oscillator circuit at very-high frequencies, not only as a means to secure more power output than can be obtained from one tube but also because better circuit symmetry is possible with open lines. Fig. 429 shows a typical push-pull circuit of the t.p.t.g. (§ 3-7) type. The grid line is usually operated as the frequency-controlling circuit, since it is not associated with the load and hence its Q can be kept high. The same adjustment considerations apply as in the case of the single-tube oscillator described in the preceding paragraph. The grid taps in particular should be tapped down as far as possible, thus improving the frequency stability.

It is also possible to use a linear tank in the grid circuit for frequency control, in conjunction with a conventional coil-condenser tank in the plate circuit where the lower Q does not have so great an effect on the stability.

Fig. 429-B shows a push-pull oscillator having tuned plate and cathode circuits, using linear tanks for each. The grids are connected together and grounded through the grid leak, R_1; ordinarily no by-pass condenser is needed across R_1. This circuit gives good power output at very-high frequencies, but is not especially stable unless the plates are tapped down on the plate tank circuit to avoid too great a reduction in Q. Tapping on the cathode line is not feasible for mechanical reasons, since one filament lead must be brought through the tubing in order to maintain both sides of the filament at the same r.f. potential.

Concentric-line circuits — At frequencies in the neighborhood of 300 Mc., radiation (§ 2-12) from the open line becomes so serious that the Q is greatly reduced. This is because the conductor spacing represents an appreciable fraction of the wavelength. Consequently, at these frequencies the concentric line must be used. In this type the field is confined inside the line, so that radiation is negligible. There is a further advantage in that the outside of the line is "cold"; that is, no r.f. potentials develop between points on the outer surface. While the concentric line also is advantageous at lower frequencies, because it is more complicated to construct and adjustments are more difficult the open lines are generally favored.

The concentric line usually is constructed of copper pipes arranged concentrically and short-circuited at one end. The optimum ratio of inner diameter of the outer conductor to the outer diameter of the inner conductor is 3.6. Taps may be made on the inner conductor and brought through a hole in the outer conductor to the tube element, as shown in Fig. 430. The tube loads the line in the same way as described in the preceding par-

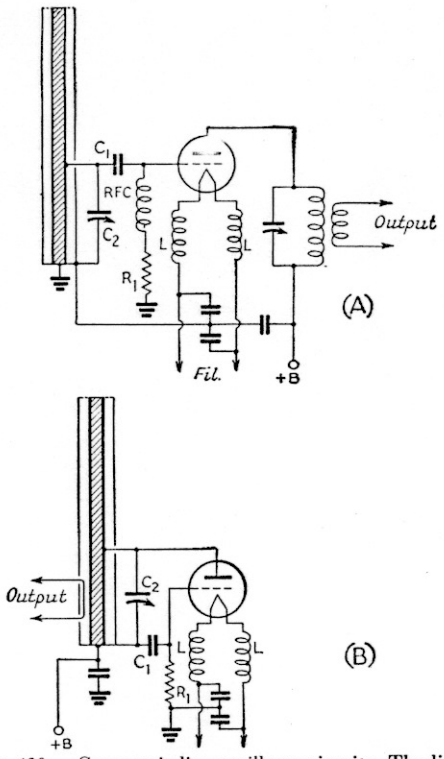

Fig. 430 — Concentric-line oscillator circuits. The line, usually made of tubular conductors, is shown in cross-section. See Fig. 428 and the text for circuit constants.

agraphs, hence the length is generally shorter than an actual quarter wavelength. The length can be adjusted by a sliding short-circuiting disc at the closed end, a close fit and low-resistance contact being necessary to avoid reduction of the Q. It is also possible to make the inner conductor a pair of close-fitting concentric tubes, so that one may be slid in or out of the other to change the effective conductor length.

The circuit of Fig. 430-A is a t.p.t.g. (§ 3-7) oscillator, using the concentric line in the grid circuit for frequency control. An ordinary coil-condenser tank is shown in the plate circuit, but a linear tank may be substituted. The filament inductances have the same function as in the preceding circuits. The ultraudion circuit is shown at B; the same considerations apply. In this case, the output is taken from the line inductively by means of the half-turn "hairpin" shown; coupling can be changed to some extent by varying the position of the hairpin. Both circuits may be tuned by means of the small variable condenser, C_2, although this condenser may be omitted and the tuning accomplished by changing the line length.

For ease of construction, the concentric line sometimes is modified into a "trough," in which the cross-section of the outer conductor is in the shape of a square U, one side being left open for tapping and adjustment of the inner conductor. Some radiation takes place with this type of construction, although not so much as with open lines.

High-Q circuits with lumped constants — To obtain reasonably high effective Q when a low resistance is connected across the tank circuit, it is necessary to use a high C/L ratio and a tank of inherently high Q (§ 2-10). At low frequencies the inherent Q of any well-designed circuit will be high enough so that it may be neglected in comparison to the effective Q when loaded, so that no special precautions have to be taken with respect to the resistance of coils and condensers. At the very-high frequencies these internal resistances are too large to be ignored, and a reduction of the L/C ratio will not increase the effective Q unless the internal resistance of the tank can be made very small. The reduction in resistance can be brought about by use of large conducting surfaces and elimination of radiation. In such cases, the inductance and capacity are generally built as a unit; several arrangements are possible, one being shown in Fig. 431. The tank circuit consists of a rod A (the inductance) inside two concentric cylinders, B and C, which form a two-plate condenser, one plate being connected to each end of the inductance. The resonant frequency is determined by the length and diameter of A, and the length, diameter and spacing of B and C. The oscillator shown uses the tickler circuit (§ 3-7), with the feed-back coil in the grid circuit; this inductance is the wire D in the diagram. Output is taken from the tank circuit by means of a hairpin coupling coil. Such a tank circuit also may be used in the ultraudion circuit, replacing the concentric line in Fig. 430-B. A variable condenser may be connected across the tank for tuning, if desired, although the Q may be reduced if a considerable portion of the tank r.f. current flows through it.

This type of circuit actually has lumped constants only when the length is small (10 per cent or less of the wavelength). At greater lengths it tends to act as a linear circuit, eventually evolving into the concentric line.

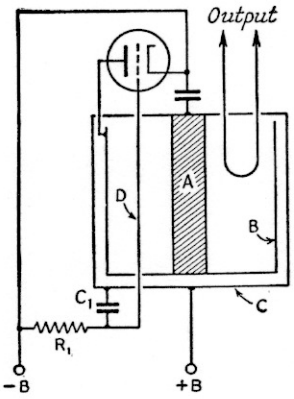

Fig. 431 — High-Q lumped-constant tank circuit in a v.h.f. oscillator. This drawing shows a cross-section of the tank, which is usually built of concentric cylinders. C_1 and R_1 are the grid condenser and leak, respectively. See Fig. 428 and text for discussion of circuit constants.

CHAPTER FIVE

Radiotelephony

¶ 5-1 Modulation

The carrier — The steady radio-frequency power generated by transmitting circuits cannot alone result in the transmission of an intelligible message to a receiving point. The continuous wave from the transmitter itself serves only as a "carrier" for the message; the intelligence is conveyed by *modulation* (a change) of the carrier. In radiotelephony, this modulation reproduces electrically the sounds it is intended to convey.

Sound and alternating currents — Sounds are caused by vibrations of air particles. The pitch of the sound depends upon the rate of vibration; the more rapid the vibration, the higher the pitch. Most sounds consist of complex combinations of vibrations of differing rates or frequencies; the human voice, for instance, generates frequencies from about 100 cycles per second to several thousand per second. The problem of transmitting speech by radio therefore is one of varying the r.f. carrier in a way which corresponds to the air-particle vibrations. The first step in doing this is to change the sound vibrations into alternating electrical currents of the same frequency and relative intensity; the electromechanical device which achieves this translation is the *microphone*. These currents then may be amplified and used to modulate the normally steady r.f. output of the transmitter.

Methods of modulation — The carrier may be made to vary in accordance with the speech current by using the current to change the phase (§ 2-7), frequency or amplitude of the carrier. *Amplitude modulation* is by far the most common system, and is used exclusively on all frequencies below the very-high-frequency region (§ 2-7). *Frequency modulation*, which has special characteristics which make its use desirable under certain conditions, is used to a considerable extent on the very-high frequencies. *Phase modulation*, which is closely related to frequency modulation, has had little or no direct application in practical communication.

¶ 5-2 Amplitude Modulation

Carrier requirements — For proper amplitude modulation, the carrier should be completely free from inherent amplitude variations such as might be caused by insufficient filtering of a rectified-a.c. power supply (§ 8-4). It is also essential that the carrier *frequency* be entirely unaffected by the application of modulation. If modulating the amplitude of the carrier also causes a change in the carrier frequency the signal wobbles back and forth with the modulation, introducing distortion and widening the channel taken by the signal. This causes unnecessary interference to other transmissions. In practice, this undesirable frequency modulation is prevented by applying the modulation to an r.f. amplifier stage which is isolated from the frequency-controlling oscillator by a "buffer" amplifier. Amplitude modulation of an oscillator almost always is accompanied by frequency modulation. It is permitted therefore only on frequencies above 112 Mc., because the problem of interference is less acute in this region than on lower frequencies.

Percentage of modulation — In the amplitude-modulation system the audible output at the receiver depends entirely upon the amount of variation — termed *depth of modulation* — in the carrier wave, and not upon the strength of the carrier alone. It is desirable therefore to obtain the largest permissible variations in the carrier wave. This condition

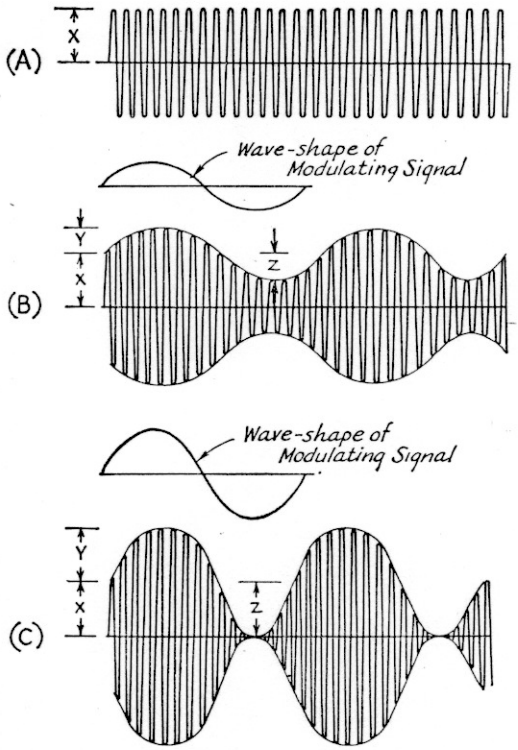

Fig. 501 — Graphical representation of (A) unmodulated carrier, (B) modulated 50%, (C) modulated 100%.

is reached when the carrier amplitude during modulation is at times reduced to zero and at other times increased to twice its unmodulated value. Such a wave is said to be *fully modulated*, or *100 per cent modulated*. Any desired degree of modulation can be expressed as a percentage, using the unmodulated carrier as a base. Fig. 501 shows, at A, an unmodulated carrier wave; at B, the same wave modulated 50 per cent, and at C, the wave with 100 per cent modulation, using a sine-wave (§2-7) modulating signal. The outline of the modulated r.f. wave is called the *modulation envelope*.

The percentage modulation can be found by dividing either Y or Z by X and multiplying the result by 100. If the modulating signal is not symmetrical, the larger of the two (Y or Z) should be used.

Power in modulated wave — The amplitude values correspond to current or voltage, so that the drawings may be taken to represent instantaneous values of either. Since power varies as the square of either the current or voltage (so long as the resistance in the circuit is unchanged), at the peak of the modulation up-swing the instantaneous power in the wave of Fig. 501-C is four times the unmodulated carrier power. At the peak of the down-swing the power is zero, since the amplitude is zero. With a sine-wave modulating signal, the *average* power in a 100 per cent modulated wave is one and one-half times the unmodulated carrier power; that is, the power output of the transmitter increases 50 per cent with 100 per cent modulation.

Linearity — Up to the limit of 100 per cent modulation, the amplitude of the carrier should follow faithfully the amplitude variations of the modulating signal. When the modulated r.f. amplifier is incapable of meeting this condition, it is said to be *non-linear*. The amplifier may not, for instance, be capable of quadrupling its power output at the peak of 100 per cent modulation. A non-linear modulated amplifier causes distortion of the modulation envelope.

Modulation characteristic — A graph showing the relationship between r.f. amplitude and instantaneous modulating voltage is called the *modulation characteristic* of the modulated amplifier. This graph should be a straight line (linear) between the limits of zero and twice carrier amplitude. Curvature of the line between these limits indicates non-linearity in the amplifier.

Modulation capability — The *modulation capability* of the transmitter is the maximum percentage of modulation that is possible without objectionable distortion from non-linearity. The maximum capability is, of course, 100 per cent. The modulation capability should be as high as possible, so that the most effective signal can be transmitted for a given carrier power.

Overmodulation — If the carrier is modulated more than 100 per cent, a condition such as is shown in Fig. 502 occurs. Not only does the peak amplitude exceed twice the carrier amplitude, but actually there may be a considerable period during which the output is entirely cut off. The modulated wave is therefore distorted (§ 3-3), with the result that harmonics of the audio modulating frequency appear. The carrier should never be modulated more than 100 per cent.

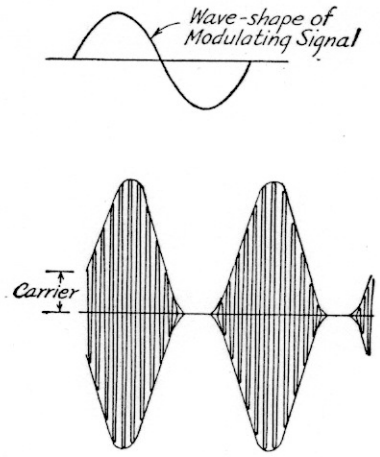

Fig. 502 — An overmodulated carrier wave.

Sidebands — The combining of the audio frequency with the r.f. carrier is essentially a heterodyne process, and therefore gives rise to beat frequencies equal to the sum and difference of the a.f. and r.f. frequencies involved (§ 2-13). Therefore, for each audio frequency appearing in the modulating signal, two new radio frequencies appear, one equal to the carrier frequency plus the audio frequency, the other equal to the carrier minus the audio frequency. These new frequencies are called *side frequencies*, since they appear on each side of the carrier, and the groups of side frequencies representing a band or group of modulation frequencies are called *sidebands*. Hence a modulated signal occupies a group of radio frequencies, or *channel*, rather than a single frequency as in the case of the unmodulated carrier. The *channel width* is twice the highest modulation frequency. To accommodate the largest number of transmitters in a given part of the r.f. spectrum it is apparent that the channel width should be as small as possible, but on the other hand it is necessary, for speech of reasonably good quality, to use modulating frequencies up to about 3000 or 4000 cycles. This calls for a channel width of 6 to 8 kilocycles.

Spurious sidebands — Besides the normal sidebands required by speech frequencies, unwanted sidebands may be generated by the transmitter. These usually lie outside the normally required channel, and hence cause it to be wider without increasing the useful modulation. By increasing the channel width, these spurious sidebands cause unnecessary

interference to other transmitters. The quality of transmission also is adversely affected when spurious sidebands are generated.

The chief causes of spurious sidebands are harmonic distortion in the audio system, overmodulation, unnecessary frequency modulation, and lack of linearity in the modulated r.f. system.

Types of amplitude modulation — The most widely used type of amplitude-modulation system is that in which the modulating signal is applied in the plate circuit of a radio-frequency power amplifier (*plate modulation*). In a second type the audio signal is applied to a control-grid circuit (*grid-bias modulation*). A third system involves variation of both plate voltage and grid bias, and is called *cathode modulation.*

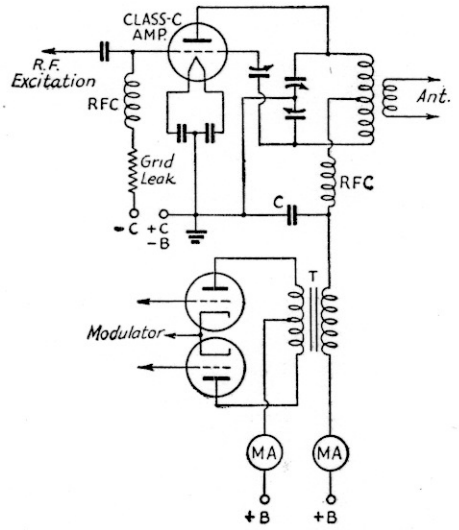

Fig. 503 — Plate modulation of a Class-C r.f. amplifier. The r.f. plate by-pass condenser, *C*, in the amplifier stage should have high reactance at audio frequencies. A capacity of 0.002 μfd. or less usually is satisfactory.

5-3 Plate Modulation

Transformer coupling — In Fig. 503 is shown the most widely used system of plate modulation. A balanced (push-pull Class-A, Class-AB or Class-B) modulator is transformer-coupled to the plate circuit of the modulated r.f. amplifier. The audio-frequency power generated in the modulator plate circuit is combined with the d.c. power in the modulated-amplifier plate circuit by transfer through the coupling transformer, *T*. For 100 per cent modulation the audio-frequency output of the modulator and the turns ratio of the coupling transformer must be such that the voltage at the plate of the modulated amplifier varies between zero and twice the d.c. operating plate voltage, thus causing corresponding variations in the amplitude of the r.f. output.

Modulator power — The average power output of the modulated stage must increase 50 per cent for 100 per cent modulation (§ 5-2), so that the modulator must supply to the modulated r.f. stage audio power equal to 50 per cent of the d.c. plate input. For example, if the d.c. plate power input to the r.f. stage is 100 watts, the sine-wave audio power output of the modulator must be 50 watts.

Modulating impedance, linearity — The *modulating impedance*, or load resistance presented to the modulator by the modulated r.f. amplifier, is equal to

$$\frac{E_b}{I_p} \times 1000$$

where E_b is the d.c. plate voltage and I_p the d.c. plate current in milliamperes, both measured without modulation.

Since the power output of the r.f. amplifier must vary as the square of the plate voltage (r.f. voltage proportional to applied plate voltage) in order for the modulation to be linear, the amplifier must operate Class-C (§ 3-4). The linearity depends upon having sufficient grid excitation and proper bias, and the adjustment of circuit constants to the proper values (§ 4-8).

Power in speech waves — The complex waveform of a speech sound translated into alternating current does not contain as much power, on the average, as there is in a pure tone or sine wave of the same peak (§ 2-7) amplitude. That is, with speech waveforms the ratio of peak to average amplitude is higher than in the sine wave. For this reason, the previous statement that the power output of the transmitter increases 50 per cent with 100 per cent modulation, while true for tone modulation, is not true for speech. On the average, speech waveforms will contain only about half as much power as a sine wave, both having the same peak amplitude. The average power output of the transmitter therefore increases only about 25 per cent with 100 per cent speech modulation. However, the *instantaneous* power output must quadruple on the peak of 100 per cent modulation (§ 5-2) regardless of the modulating waveform. Therefore, the peak capacity of the transmitter must be the same for any type of modulating signal.

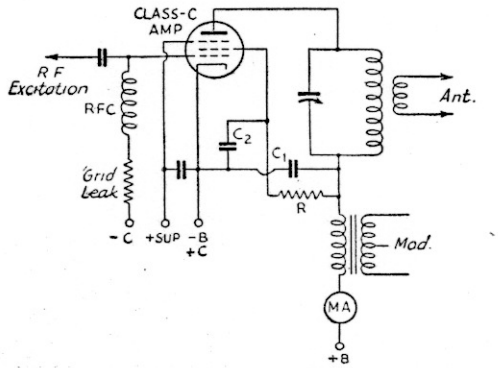

Fig. 504 — Plate and screen modulation of a Class-C r.f. amplifier using a pentode tube. The plate and screen r.f. by-pass condensers, C_1 and C_2, should have high reactance at all audio frequencies (0.002 μfd. or less).

Adjustment of plate-modulated amplifiers — The general operating conditions for Class-C operation have been described (§ 3-4, 4-8). The grid bias and grid current required for plate modulation usually are given in the operating data supplied by the tube manufacturer; in general, the bias should be such as to give an operating angle (§ 4-8) of about 120 degrees at carrier plate voltage, and the excitation should be sufficient to maintain the plate efficiency constant when the plate voltage is varied over the range from zero to twice the d.c. plate voltage applied to the amplifier. For best linearity, the grid bias should be obtained partly from a fixed source of about the cut-off value, supplemented by grid-leak bias to supply the remainder of the required operating bias.

The maximum permissible d.c. plate power input for 100 per cent modulation is twice the sine-wave audio-frequency power output of the modulator. This input is obtained by varying the loading on the amplifier (keeping its tank circuit tuned to resonance) until the product of d.c. plate voltage and plate current is the desired power. The modulating impedance under these conditions will be the proper value for the modulator, if the proper output-transformer turns ratio (§ 2-9) is used.

Neutralization, when triodes are used, should be as nearly perfect as possible, since regeneration may cause non-linearity. The amplifier also should be free from parasitic oscillations (§ 4-10).

Although the *effective* value (§ 2-7) of power input increases with modulation, as described above, the *average* plate input to a plate-modulated amplifier does not change, since each increase in plate voltage and plate current is balanced by an equivalent decrease in voltage and current. Consequently, the d.c. plate current to a properly modulated amplifier is always constant, with or without modulation.

Screen-grid amplifiers — Screen-grid tubes of the pentode or beam tetrode type can be used as Class-C plate-modulated amplifiers provided the modulation is applied to both the plate and screen grid. The method of feeding the screen grid with the necessary d.c. and modulation voltage is shown in Fig. 504. The dropping resistor, R, should be of the proper value to apply normal d.c. voltage to the screen under steady carrier conditions. Its value can be calculated by taking the difference between plate and screen voltages and dividing it by the rated screen current.

The modulating impedance is found by dividing the d.c. plate voltage by the sum of the plate and screen currents. The plate voltage multiplied by the sum of the two currents is the power-input figure which is used as the basis for determining the audio power required from the modulator.

Choke coupling — In Fig. 505 is shown the circuit of the choke-coupled system of plate modulation. The plate power for the modulator tube and modulated amplifier is furnished from a common source through the modulation choke, L, which has high impedance for audio frequencies. The modulator operates as a power amplifier with the plate circuit of the r.f.

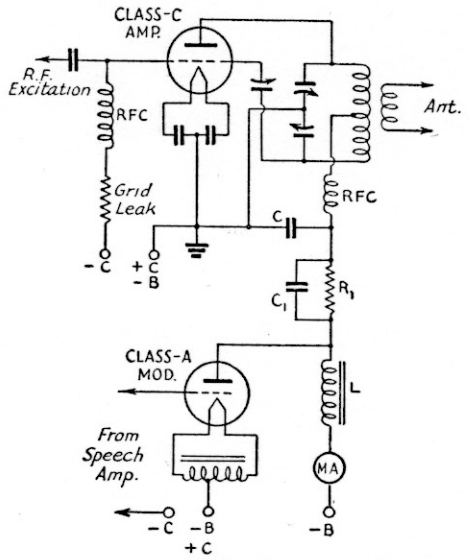

Fig. 505 — **Choke-coupled plate modulation.**

amplifier as its load, the audio output of the modulator being superimposed on the d.c. power supplied to the amplifier. For 100 per cent modulation, the audio voltage applied to the r.f. amplifier plate circuit across the choke, L, must have a peak value equal to the d.c. voltage on the modulated amplifier. To obtain this without distortion the r.f. amplifier must be operated at a d.c. plate voltage less than the modulator plate voltage, the extent of the voltage difference being determined by the type of modulator tube used. The necessary drop in voltage is provided by the resistor, R_1, which is by-passed for audio frequencies by the by-pass condenser, C_1.

This type of modulation seldom is used except in very low-power portable sets, because a single-tube Class-A (§ 3-4) modulator is required. The output of a Class-A modulator is very low compared to that obtainable from a pair of tubes of the same size operated Class B, hence only a small amount of r.f. power can be modulated.

¶ 5-4 Grid-Bias Modulation

Circuit — Fig. 506 is the diagram of a typical arrangement for grid-bias modulation. In this system, the secondary of an audio-frequency output transformer, the primary of which is connected in the plate circuit of the modulator tube, is connected in series with the grid-bias supply for the modulated amplifier. The audio voltage thus introduced varies the grid bias, and thus the power output of the r.f. stage, when suitable operating condi-

tions are chosen. The r.f. stage is operated as a Class-C amplifier, with the d.c. grid bias considerably beyond cut-off.

Operating principles — In this system the plate voltage is constant, and the increase in power output with modulation is obtained by making the plate current and plate efficiency vary with the modulating signal. For 100 per cent modulation, both plate current and efficiency must, at the peak of the modulation upswing, be twice their carrier values, so that the peak power will be four times the carrier power. Since the peak efficiency in practicable circuits is of the order of 70 to 80 per cent, the carrier efficiency ordinarily cannot exceed about 35 to 40 per cent. For a given size of r.f. tube, the carrier output is about one-fourth the power obtainable from the same tube plate-modulated. The grid bias, r.f. excitation, plate loading and audio voltage in series with the grid must be adjusted to give a linear modulation characteristic.

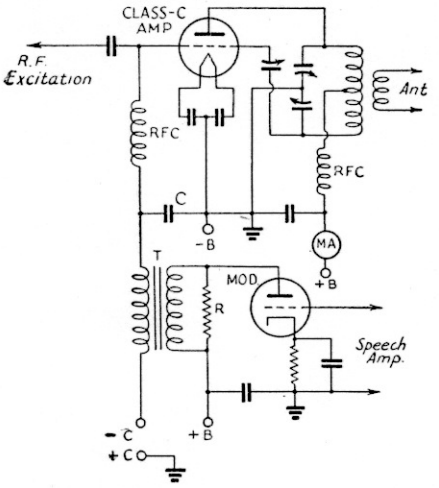

Fig. 506 — Grid-bias modulation of a Class-C amplifier. The r.f. grid by-pass condenser, *C*, should have high reactance at audio frequencies (0.002 μfd. or less).

Modulator power — Since the increase in average carrier power with modulation is secured by varying the plate efficiency and d.c. plate input of the amplifier, the modulator need supply only such power losses as may be occasioned by connecting it in the grid circuit. These are quite small, hence a modulator capable of only a few watts output will suffice for transmitters of considerable power. The load on the modulator varies over the audio-frequency cycle as the rectified grid current of the modulated amplifier changes, hence the modulator should have good voltage regulation (§ 5-6).

Grid-bias source — The change in bias voltage with modulation causes the rectified grid current of the amplifier also to vary, the r.f. excitation being fixed. If the bias source has appreciable resistance, the change in grid current also will cause a change in bias in a direction opposite to that caused by the modulation. It is necessary, therefore, to use a grid-bias source having low resistance, so that these bias variations will be negligible. Battery bias is satisfactory. If a rectified a.c. bias supply is used, the type having regulated output (§ 8-9) should be chosen. Grid-leak bias for a grid-modulated amplifier is unsatisfactory, and its use should not be attempted.

Driver regulation — The load on the driving stage varies with modulation, and a linear modulation characteristic may not be obtained if the r.f. voltage from the driver does not stay constant with changes in load. Driver regulation (ability to maintain constant output voltage with changes in load) may be improved by using a driving stage having two or three times the power output necessary for excitation of the amplifier (this is somewhat less than the power required for ordinary Class-C operation), and by dissipating the extra power in a constant load such as a resistor. The load variations are thereby reduced in proportion to the total load.

Adjustment of grid-bias modulated amplifiers — This type of amplifier should be adjusted with the aid of an oscilloscope, to obtain optimum operating conditions. The oscilloscope should be connected as described in § 5-10, the wedge pattern being preferable. A tone source for modulating the transmitter will be convenient. The fixed grid bias should be two or three times the cut-off value (§ 3-2). The d.c. input to the amplifier, assuming 33 per cent carrier efficiency, will be 1½ times the plate dissipation rating of the tube or tubes used in the modulated stage. The plate current for this input (in milliamperes, 1000 P/E, where P is the power and E the d.c. plate voltage) must be determined. Apply r.f. excitation and, without modulation, adjust the plate loading to give the required plate current (keeping the plate tank circuit tuned to resonance). Next, apply modulation and increase the modulating signal until the modulation characteristic shows curvature (§ 5-10). This probably will occur well below 100 per cent modulation, indicating that the plate efficiency is too high. Increase the plate loading and reduce the excitation to maintain the same plate current; then apply modulation and check the characteristic again. Continue this process until the characteristic is linear from the axis to twice the carrier amplitude. It is advantageous to use the maximum permissible plate voltage on the tube, since it is usually easier to obtain a more linear characteristic with high plate voltage and low current (carrier conditions) than with relatively low plate voltage and high plate current.

The amplifier can be adjusted without an oscilloscope by determining the plate current as described above, then setting the bias to the cut-off value (or slightly beyond) for the d.c. plate voltage used and applying maximum excitation. Adjust the plate loading, keeping

the tank circuit at resonance, until the amplifier draws twice the carrier plate current, and note the antenna current. Decrease the excitation until the output and plate current just start to drop. Then increase the bias, leaving the excitation and plate loading unchanged, until the plate current drops to the proper carrier value. The antenna current should be just half the previous value; if it is larger, try somewhat more loading and less excitation; if smaller, less loading and more excitation. Repeat until the antenna current drops to half its maximum value when the plate current is biased down to the carrier value. Under these conditions the amplifier should modulate properly, provided the plate supply has good voltage regulation (§ 8-1) so that the plate voltage is practically the same at both values of plate current during the initial testing.

The d.c. plate current should be substantially constant both with and without modulation (§ 5-3).

Suppressor modulation — The circuit arrangement for suppressor-grid modulation of a pentode tube is shown in Fig. 507. The operating principles are the same as for grid-bias modulation. However, the r.f. excitation and modulating signals are applied to separate grids, which gives the system a simpler operating technique since best adjustment for proper excitation requirements and proper modulating circuit requirements are more or less independent. The carrier plate efficiency is approximately the same as for grid-bias modulation, and the modulator power requirements are similarly small. With tubes having suitable suppressor-grid characteristics, linear modulation up to practically 100 per cent can be obtained with negligible distortion.

The method of adjustment is essentially the same as that described in the preceding paragraph. Apply normal excitation and bias to the control grid and, with the suppressor bias at zero or the positive value recommended for c.w. telegraph operation with the particular tube used, adjust the plate loading to obtain twice the carrier plate current (on the basis of 33 per cent carrier efficiency). Then apply sufficient negative bias to the suppressor to bring the plate current to the carrier value, leaving the loading unchanged. Simultaneously, the antenna current also should drop to half its maximum value. The amplifier is then ready for modulation. Should the plate current not follow the antenna current in the same proportion when the suppressor bias is made negative, the loading and excitation should be readjusted to make them coincide.

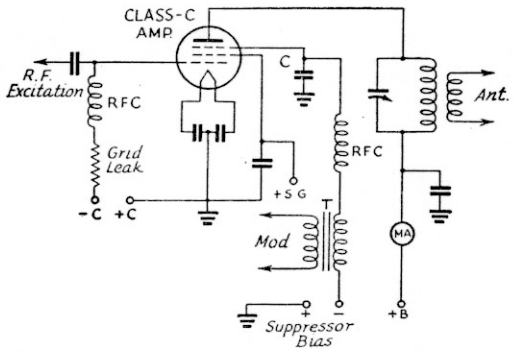

Fig. 507 — Suppressor-grid modulation of an r.f. amplifier using a pentode tube. The suppressor-grid r.f. by-pass condenser, *C*, should be 0.002 μfd. or less.

¶ 5-5 Cathode Modulation

Circuit — The fundamental circuit for cathode or "center-tap" modulation is shown in Fig. 508. This type of modulation is a combination of the plate and grid-bias methods, and permits a carrier efficiency midway between the two. The audio power is introduced in the cathode circuit, and both grid bias and plate voltage vary during modulation.

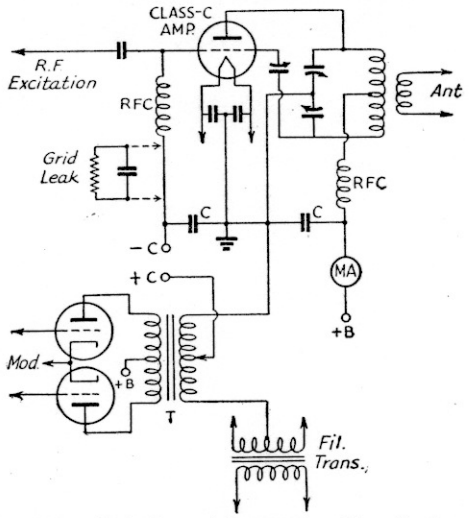

Fig. 508 — Cathode modulation of a Class-C r.f. amplifier. The grid and plate r.f. by-pass condensers, *C*, should be 0.002 μfd. or less (for high a.f. reactance).

The cathode circuit of the modulated stage must be independent of other stages in the transmitter; that is, when filament-type tubes are modulated they must be supplied from a separate filament transformer. The filament by-pass condensers should not be larger than about 0.002 μfd., to avoid by-passing the audio-frequency modulation.

Operating principles — Because part of the modulation is by the grid-bias method, the plate efficiency of the modulated amplifier must vary during modulation. The carrier efficiency therefore must be lower than the efficiency at the modulation peak. The required reduction in carrier efficiency depends upon the proportion of grid modulation to plate modulation; the higher the percentage of plate modulation, the higher the permissible carrier efficiency, and vice versa. The audio power required from the modulator also varies with the percentage of plate modulation, being greater as this percentage is increased.

The way in which the various quantities vary is illustrated by the curves of Fig. 509. In these curves the performance of the cathode-modulated r.f. amplifier is plotted in terms of the tube ratings for plate-modulated telephony, with the percentage of plate modulation as a base. As the percentage of plate modulation is decreased, it is assumed that the grid-bias modulation is increased to make the over-all percentage of modulation reach 100 per cent. The limiting condition, 100 per cent plate modulation and no grid-bias modulation, is at the right (A); pure grid-bias modulation is represented by the left-hand ordinate (B and C).

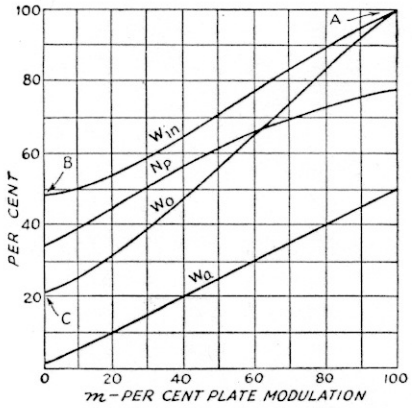

Fig. 509 — Cathode-modulation performance curves, in terms of percentage of plate modulation plotted against percentage of Class-C telephony tube ratings.

W_{in} — D.c. plate input watts in terms of percentage of plate-modulation rating.
W_o — Carrier output watts in per cent of plate-modulation rating (based on plate efficiency of 77.5%).
W_a — Audio power in per cent of d.c. watts input.
N_p — Plate efficiency of the amplifier in percentage.

As an example, assume that 40 per cent plate modulation is to be used. Then the modulated r.f. amplifier must be adjusted for a carrier plate efficiency of 56 per cent, the permissible plate input will be 65 per cent of the ratings of the same tube with pure plate modulation, the power output will be 48 per cent of the rated output of the tube with plate modulation, and the audio power required from the modulator will be 20 per cent of the d.c. input to the modulated amplifier.

Modulating impedance — The modulating impedance of a cathode-modulated amplifier is approximately equal to

$$m\frac{E_b}{I_b}$$

where m is the percentage of plate modulation expressed as a decimal, E_b is the plate voltage and I_b the plate current of the modulated r.f. amplifier. This figure for the modulating impedance is used in the same way as the corresponding figure for pure plate modulation, in determining the proper modulator operating conditions (§ 5-6).

Conditions for linearity — R.f. excitation requirements for the cathode-modulated amplifier are midway between those for plate modulation and grid-bias modulation. More excitation is required as the percentage of plate modulation is increased. Grid bias should be considerably beyond cut-off; fixed bias from a supply having good voltage regulation (§ 8-9) is preferred, especially when the percentage of plate modulation is small and the amplifier is operating more nearly like a grid-bias modulated stage. At the higher percentages of plate modulation a combination of fixed and grid-leak bias can be used, since the variation in rectified grid current is smaller. The grid-leak should be by-passed for audio frequencies. The percentage of grid modulation may be regulated by choice of a suitable tap on the modulation transformer secondary.

Adjustment of cathode-modulated amplifiers — In most respects, the adjustment procedure is similar to that for grid-bias modulation (§ 5-4). The critical adjustments are those of antenna loading, grid bias, and excitation. The proportion of grid-bias to plate modulation will determine the operating conditions.

Adjustments should be made with the aid of an oscilloscope (§ 5-10). With proper antenna loading and excitation, the normal wedge-shaped pattern will be obtained at 100 per cent modulation. As in the case of grid-bias modulation, too-light antenna loading will cause flattening of the up-peaks of modulation (downward modulation), as also will too-high excitation (§ 5-10). The cathode current will be practically constant with or without modulation when the proper operating conditions are reached (§ 5-3).

¶ 5-6 Class-B Modulators

Modulator tubes — In the case of plate modulation, the relatively large audio power needed (§ 5-3) practically dictates the use of a Class-B (§ 3-4) modulator, since the power can be obtained most economically with this type of amplifier. A typical circuit is given in Fig. 510. A pair of tubes must be chosen which is capable of delivering sine-wave audio power

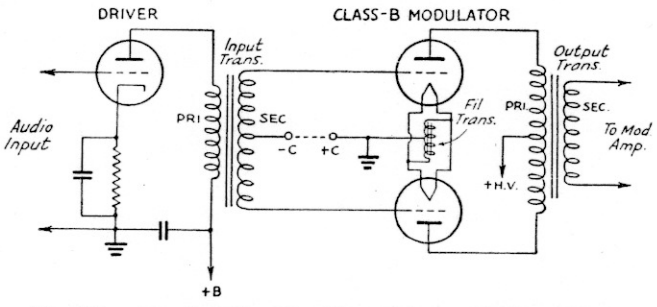

Fig. 510 — A typical Class-B audio modulator and driver circuit.

equal to half the d.c. input to the modulated Class-C amplifier. It is sometimes convenient to use tubes which will operate at the same plate voltage as that applied to the Class-C stage, since one power supply of adequate current capacity may then suffice for both stages. Available components do not always permit this, however, and better over-all performance and economy may result from the use of separate power supplies.

Matching to load — In giving Class-B ratings on power tubes, manufacturers specify the plate-to-plate load impedance (§ 3-3) into which the tubes must operate to deliver the rated audio power output. This load impedance seldom is the same as the modulating impedance (§ 5-3) of the Class-C r.f. stage, so that a match must be brought about by adjusting the turns ratio of the coupling transformer. The required turns ratio, primary to secondary, is

$$\sqrt{\frac{Z_p}{Z_m}}$$

where Z_m is the Class-C modulating impedance and Z_p is the plate-to-plate load impedance specified for the Class-B tubes.

Commercial Class-B output transformers usually are rated to work between specified primary and secondary impedances and are designed for specific Class-B tubes. In such a case, the turns ratio can be found by substituting the given impedances in the formula above. Many transformers are provided with primary and secondary taps, so that various turns ratios can be obtained to meet the requirements of a large number of tube combinations.

Driving power — Class-B amplifiers are driven into the grid-current region, so that power is consumed in the grid circuit (§ 3-3). The preceding stage (*driver*) must be capable of supplying this power at the required peak audio-frequency grid-to-grid voltage. Both of these quantities are given in the manufacturer's tube ratings. The grids of the Class-B tubes represent a variable load resistance over the audio-frequency cycle, since the grid current does not increase directly with the grid voltage. To prevent distortion, therefore, it is necessary to have a driving source which has good *regulation* — that is, which will maintain the waveform of the signal without distortion even though the load varies. This can be brought about by using a driver capable of delivering two or three times the actual power consumed by the Class-B grids, and by using an input coupling transformer having a turns ratio giving the largest step-down in the voltage between the driver plate or plates and the Class-B grids that will permit obtaining the specified grid-to-grid a.f. voltage.

Driver coupling — A Class-A or Class-AB (§ 3-4) driver is used to excite a Class-B stage. Tubes for the driver preferably should be triodes having low plate resistance, since these will have the best regulation. Having chosen a tube or tubes capable of ample power output from tube data sheets, the peak output voltage will be, approximately,

$$E_o = 1.4\sqrt{PR}$$

where P is the power output and R the load resistance. The input transformer ratio, primary to secondary, will be

$$\frac{E_o}{E_g}$$

where E_o is as given above and E_g is the peak grid-to-grid voltage required by the modulator tubes.

Commercial transformers usually are designed for specific driver-modulator combinations, and usually are adjusted to give as good driver regulation as the conditions will permit.

Grid bias — Modern Class-B audio tubes are intended for operation without fixed bias. This lessens the variable grid-circuit loading effect and eliminates the need for a grid-bias supply.

When a grid-bias supply is required, it must have low internal resistance so that the flow of grid current with excitation of the Class-B tubes does not cause a continual shift in the actual grid bias and thus cause distortion. Batteries or a regulated bias supply (§ 8-9) should be used.

Plate supply — The plate supply for a Class-B modulator should be sufficiently well filtered (§ 8-3) to prevent hum modulation of the r.f. stage (§ 5-2). An additional requirement is that the output condenser of the supply should have low reactance (§ 2-8) at 100 cycles or less compared to the load into which each tube is working, which is one-fourth the plate-to-plate load resistance. A 4-μfd. output condenser with a 1000-volt supply, or a 2-μfd. condenser with a 2000-volt supply, usually will be satisfactory. With other plate voltages, condenser values should be in inverse proportion to the plate voltage.

Overexcitation — When a Class-B amplifier is overdriven in an attempt to secure more than the rated power, distortion in the output waveshape increases rapidly. The high-frequency harmonics which result from the distortion (§ 3-3) modulate the transmitter, producing spurious sidebands (§ 5-2) which readily can cause serious interference over a band of frequencies several times the channel width required for speech. This may happen even though the transmitter is not being overmodulated, as in the case where the modulator is incapable of delivering the power required to modulate the transmitter fully, or when the Class-C amplifier is not adjusted to give the proper modulating impedance (§ 5-3).

The tubes used in the Class-B modulator should be capable of somewhat more than the power output nominally required (50 per cent of the d.c. input to the modulated amplifier) to

take care of losses in the output transformer. These usually run from 10 per cent to 20 per cent of the tube output. In addition, the Class-C amplifier should be adjusted to give the proper modulating impedance and the correct output transformer turns ratio should be used. Such high-frequency harmonics as may be generated in these circumstances can be reduced by connecting condensers across the primary and secondary of the output transformer (about 0.002 μfd. in the average case), to form, with the transformer leakage inductance (§ 2-9) a low-pass filter (§ 2-11) which cuts off just above the maximum audio frequency required for speech transmission (about 4000 cycles). The condenser voltage ratings should be adequate for the peak a.f. voltages appearing across them.

Operation without load — Excitation should never be applied to a Class-B modulator until after the Class-C amplifier is turned on and is drawing the value of plate current required to present the rated load to the modulator. With no load to absorb the power, the primary impedance of the transformer rises to a high value and excessive audio voltages are developed across it — frequently high enough to break down the transformer insulation. If the modulator is to be tested separately from the transmitter, a load resistance of the same value as the modulating impedance, and capable of dissipating the full power output of the modulator, should be connected across the transformer secondary.

5-7 Low-Level Modulators

Selection of tubes — Modulators for grid-bias and suppressor modulation can be small audio power tubes, since the audio power required usually is small. A triode such as the 2A3 is preferable because of its low plate resistance, but pentodes will work satisfactorily.

Matching to load — Since the ordinary Class-A receiving power tube will develop about 200 to 250 peak volts in its plate circuit, which is ample for most low-level modulator applications, a 1:1 coupling transformer is generally used. If more voltage is required, a step-up ratio must be provided in the transformer. It is usual practice to load the primary of the output-coupling transformer with a resistance equal to or slightly higher than the rated load resistance for the tube, to stabilize the voltage output and thus improve the regulation. This is indicated in Figs. 506 and 507.

5-8 Microphones

Sensitivity — The *level* of a microphone is its electrical output for a given speech intensity input. Level varies greatly with microphones of different basic types, and also varies between different models of the same type. The output is also greatly dependent on the character of the individual voice (that is, the audio frequencies present in the voice) and the distance of the speaker's lips from the microphone, decreasing approximately as the square of the distance. Hence, only approximate values based on averages of "normal" speaking voices can be attempted. The values given in the following paragraphs are based on close talking; that is, with the microphone less than an inch from the speaker's lips.

Frequency response — The *frequency response* or *fidelity* of a microphone is its relative ability to convert sounds of different frequencies into alternating current. With fixed sound intensity at the microphone, the electrical output may vary considerably as the sound frequency is varied. For understandable speech transmission only a limited frequency range is necessary, and natural-sounding speech can be obtained if the output of the microphone does not vary more than a few decibels (§ 3-3) at any frequency within a range of about 200 cycles to 4000 cycles. When the variation expressed in terms of decibels is small between two frequency limits, the microphone is said to be *flat* between those limits.

Carbon microphones — Fig. 511 shows connections for single- and double-button carbon microphones, with a rheostat included in each circuit for adjusting the button current to the correct value as specified with each microphone. The single-button microphone consists of a metal diaphragm placed against an insulating cup containing loosely packed carbon granules (*microphone button*). Current from a battery flows through the granules, the diaphragm being one connection and the metal back-plate the other. The primary of a transformer is connected in series with the battery and microphone. As the diaphragm vibrates its pressure on the granules alternately increases and decreases, causing a corresponding increase and decrease of current flow through the circuit, since the pressure changes the resistance of the mass of granules. The resulting change in the current flowing through the transformer primary causes an alternating voltage, of corresponding frequency and intensity, to be set up in the transformer secondary (§ 2-9). The double-button type is similar, but with two buttons in push-pull.

Good quality single-button carbon microphones give outputs ranging from 0.1 to 0.3 volt across 50 to 100 ohms; that is, across the primary winding of the microphone transformer. With the step-up of the transformer, a peak voltage of between 3 and 10 volts across 100,000 ohms or so can be assumed available at the grid of the first tube. The usual button current is 50 to 100 ma.

The level of good-quality double-button microphones is considerably less, ranging from 0.02 volt to 0.07 volt across 200 ohms. With this type of microphone and the usual push-pull input transformer, a peak voltage of 0.4 to 0.5 across 100,000 ohms or so can be assumed available at the first speech-amplifier grid. The button current with this type of microphone ranges from 5 to 50 ma. per button.

Crystal microphones — The input circuit for a piezoelectric or crystal type of microphone is shown in Fig. 511-E. The element in this type consists of a pair of Rochelle salts crystals cemented together, with plated electrodes. In the more sensitive types, the crystal is mechanically coupled to a diaphragm. Sound waves actuating the diaphragm cause the crystal to vibrate mechanically and, by piezoelectric action (§ 2-10), to generate a corresponding alternating voltage between the electrodes, which are connected to the grid circuit of a vacuum-tube amplifier, as shown. The crystal type requires no separate source of current or voltage.

Although the level of crystal microphones varies with different models, an output of 0.01 to 0.03 volt is representative for communication types. The level is affected by the length of the cable connecting the microphone to the first amplifier stage; the above figure is for lengths of 6 or 7 feet. The frequency characteristic is unaffected by the cable, but the load resistance (amplifier grid resistor) does affect it, the lower frequencies being attenuated as the shunt resistance becomes less. A grid-resistor value of 1 megohm or more should be used for reasonably flat response, 5 megohms being a customary figure.

Condenser microphones — The condenser microphone of Fig. 511-C consists of a two-plate capacity, with one plate stationary. The other, which is separated from the first by about a thousandth of an inch, is a thin metal membrane serving as a diaphragm. This condenser is connected in series with a resistor and a d.c. voltage source. When the diaphragm vibrates, the change in capacity causes a small charging current to flow through the circuit. The resulting audio voltage, which appears across the resistor is fed to the grid of the tube through the coupling condenser.

The output of condenser microphones varies with different models, the high-quality type being about one-hundredth to one-fiftieth as sensitive as the double-button carbon microphone. The first speech-amplifier stage must be built into the microphone, since the capacity of a connecting cable would impair both output and frequency range.

Velocity and dynamic microphones — In a velocity or "ribbon" microphone, the element acted upon by the sound waves is a thin corrugated metallic ribbon suspended between the poles of a magnet. When vibrating, the ribbon cuts the lines of force between the poles, first in one direction and then the other, thus generating an alternating voltage. The movement of the ribbon is proportional to the velocity of the sound-energized air particles. Velocity microphones are built in two types, high impedance and low impedance, the former being used in most applications. A high-impedance microphone can be directly connected to the grid of an amplifier tube, shunted by a resistance of 0.5 to 5 megohms. Low-impedance microphones are used when a long connecting cable (75 feet or more) must be employed. In such case the output of the microphone is coupled to the first amplifier stage through a suitable step-up transformer.

The level of the velocity microphone is about 0.03 to 0.05 volt. This figure applies directly to the high-impedance type, and to the low-impedance type when the voltage is measured across the coupling transformer secondary.

The dynamic microphone somewhat resembles a dynamic loud speaker in principle. A light-weight voice coil is rigidly attached to a diaphragm, the coil being placed between the poles of a permanent magnet. Sound causes the diaphragm to vibrate, thus moving the coil back and forth between the magnet poles and generating an alternating voltage the

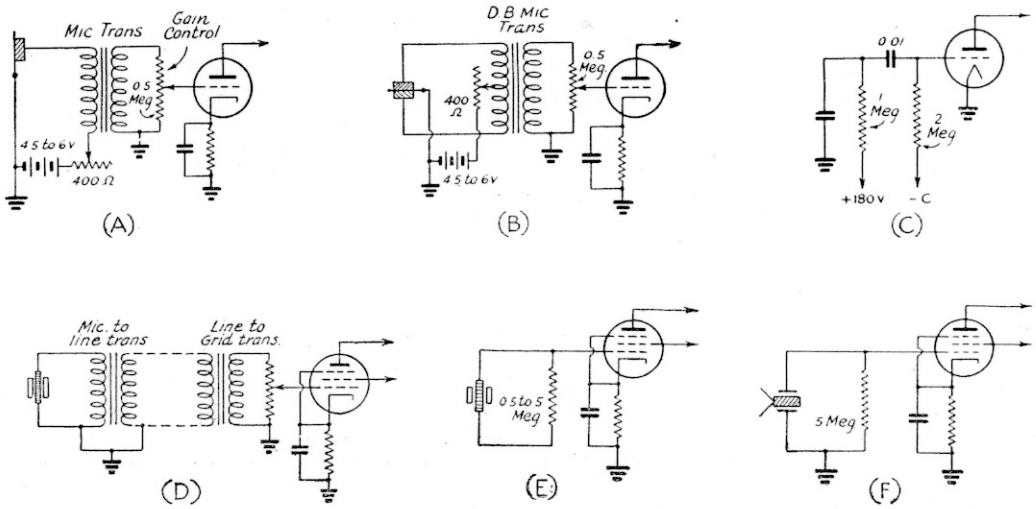

Fig. 511 — Speech input circuits of five commonly used types of microphones. A, single-button carbon; B, double-button carbon; C, condenser; D, low-impedance velocity; E, high-impedance velocity; F, crystal.

frequency of which is proportional to the frequency of the impinging sound and the amplitude proportional to the sound pressure. The dynamic microphone usually is built with high-impedance output, suitable for working directly into the grid of an amplifier tube. If the connecting cable must be unusually long a low-impedance type should be used, with a step-up transformer at the end of the cable. A small permanent-magnet speaker can be used as a dynamic microphone, although the fidelity is not as good as is obtainable with a properly designed microphone.

5-9 The Speech Amplifier

Description — The function of the speech amplifier is to build up the weak microphone voltage to a value sufficient to excite the modulator to the required output. It may have from one to several stages. The last stage nearly always must deliver a certain amount of audio power, especially when it is used to excite a Class-B modulator. Speech amplifiers for grid-bias modulation usually end in a power stage which also functions as the modulator.

The speech amplifier frequently is built as a unit separate from the modulator, and in such a case may be provided with a step-down transformer designed to work into a low impedance, such as 200 or 500 ohms (tube-to-line transformer). When this is done, a step-up input transformer intended to work between the same impedance and the modulator grids (line-to-grid transformer) is provided in the modulator circuit. The line which connects the two transformers may be made of any convenient length.

General design considerations — The last stage of the speech amplifier must be selected on the basis of the power output required from it; for instance, the power necessary to drive a Class-B modulator (§ 5-6). It may be either single-ended or push-pull (§ 3-3), the latter generally being preferable because of the higher power output and lower harmonic distortion. Push-pull amplifiers may be either Class A, Class AB_1 or Class AB_2 (§ 3-4), as the power requirements dictate. If a Class-A or AB_1 amplifier is used, the preceding stages all may be voltage amplifiers, but when a Class-AB_2 amplifier is used the stage immediately preceding it must be capable of furnishing the power consumed by its grids at full output. The requirements in this case are much the same as those which must be met by a driver for a Class-B stage (§ 5-6), but the actual power needed is considerably smaller and usually can be supplied by one or two small receiving triodes. Any lower-level speech amplifier stages invariably are worked purely as voltage amplifiers.

The minimum amplification which must be provided ahead of the last stage is equal to the peak audio-frequency grid voltage required by the last stage for full output (peak grid-to-grid voltage in the case of a push-pull stage), divided by the output voltage of the microphone or secondary of the microphone transformer if one is used (§ 5-8). The peak a.f. grid voltage required by the output tube or tubes is equal to the d.c. grid bias in the case of a single-tube Class-A amplifier, and approximately twice the grid bias for a push-pull Class-A stage. The requisite information for Class-AB_1 and AB_2 amplifiers can be obtained from the manufacturer's data on the type considered. If the gain is not obtainable in one stage, several stages must be used in cascade. When the output stage is operated Class AB_2, due allowance must be made for the fact that the next-to-the-last stage must deliver power as well as voltage. In such cases, suitable driver combinations usually are recommended by manufacturers of tubes and interstage transformers. The coupling transformer must be designed especially for the purpose.

The total gain provided by a multi-stage amplifier is equal to the product of the individual stage gains. For example, when three stages are used, the first having a gain of 100, the second 20 and the third 15, the total gain is $100 \times 20 \times 15$, or 30,000. It is good practice to provide two or three times the minimum required gain in designing the speech amplifier. This will insure having ample gain available to cope with varying conditions.

When the gain must be fairly high, as when a crystal microphone is used, the speech amplifier frequently has four stages, including the power output stage. The first generally is a pentode, because of the high gain attainable with this type of tube. The second and third stages usually are triodes, the third frequently having two tubes in push-pull when it drives a Class-AB_2 output stage. Two pentode stages seldom are used consecutively, because of the difficulty of getting stable operation when the gain per stage is very high. With carbon microphones less amplification is needed and hence the pentode first stage usually is omitted, one or two triode stages being ample to obtain full output from the power stage.

Stage gain and voltage output — In voltage amplifiers, the *stage gain* is the ratio of a.c. output voltage to a.c. voltage applied to the grid. It will vary with the applied audio frequency, but for speech work the variation should be small over the range 100–4000 cycles. This condition is easily met in practice.

The output voltage is the maximum value which can be taken from the plate circuit without distortion. It is usually expressed in terms of the peak value of the a.c. wave (§ 2-7), since this value is independent of the waveform. The peak output voltage usually is of interest only when the stage drives a power amplifier, since only in this case is the stage called upon to work near its maximum capabilities. Low-level stages very seldom are worked near their full capacity, hence harmonic distortion is negligible and the voltage gain of the stage is the primary consideration.

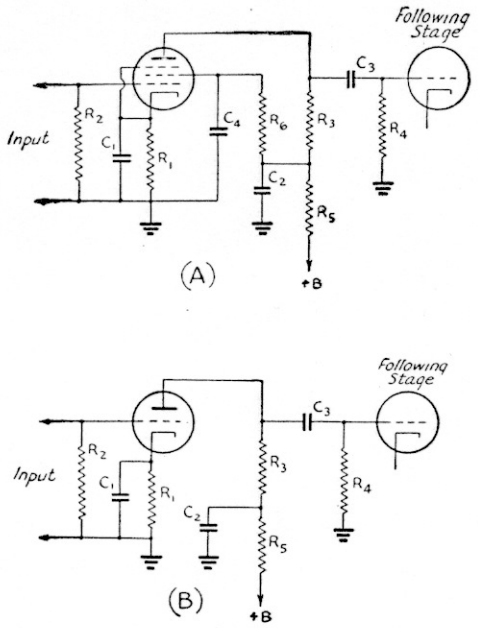

Fig. 512 — Resistance-coupled voltage amplifier circuits. A, pentode; B, triode. Designations are as follows:
C_1 — Cathode by-pass condenser.
C_2 — Plate by-pass condenser.
C_3 — Output coupling condenser (blocking condenser).
C_4 — Screen by-pass condenser.
R_1 — Cathode resistor.
R_2 — Grid resistor.
R_3 — Plate resistor.
R_4 — Next-stage grid resistor.
R_5 — Plate decoupling resistor.
R_6 — Screen resistor.
Values for commonly used tubes are given in Table I.

Resistance coupling — Resistance coupling generally is used in voltage amplifier stages. It is relatively inexpensive, good frequency response can be secured, and there is little danger of hum pick-up from stray magnetic fields associated with heater wiring. It is the only type of coupling suitable for the output circuits of pentodes and high-μ triodes, since with audio-frequency transformers a sufficiently high load impedance (§ 3-3) cannot be obtained without considerable frequency distortion. Typical circuits are given in Fig. 512.

The frequency response of the amplifier will be determined by the circuit constants, particularly C_3R_4, the coupling condenser and resistor to the following stage, and C_1R_1, the cathode bias resistor and by-pass condenser. For adequate amplification at low frequencies, the time constant (§ 2-6) of both these CR combinations should be large. Depending upon the type of tube used in the next stage, R_4 may vary from 50,000 ohms (with power tubes such as the 2A3 or 6F6) to 1 megohm; it is advantageous to use the highest value recommended for the type of tube used, since this gives greatest low-frequency response with a given size of coupling condenser, C_3. A capacity of 0.1 μfd. at C_3 will provide ample coupling at low frequencies with any ordinarily used tube, if the values shown in Table I for load resistance (R_3) and next-stage grid resistance (R_4) are used.

The reactance (§ 2-8) of C_1 must be small compared to the resistance of R_1, for good low-frequency response. While with values of R_1 in the vicinity of 10,000 ohms, more or less, a condenser of 1 μfd. will suffice, it is more common practice to use 5- or 10-μfd. low-voltage electrolytic condensers for the purpose, since they are inexpensive and provide ample by-passing. A capacity of 10 μfd. usually is sufficient with values of R_1 as low as 500 ohms.

For maximum voltage gain, the resistance at R_3 should be as high as possible without causing too great a drop in voltage at the plate of the tube. Values range from 50,000 ohms to 0.5 megohm, the smaller figure being used with triodes having comparatively low plate resistance. The value of R_1 depends upon R_3, which principally determines the plate current; in general, the grid bias is somewhat smaller than in circuits having low-resistance output devices (such as a transformer) because of the lower voltage effective at the plate of the tube. This is true also of the screen voltage, for similar reasons, and values for the screen resistor, R_6, may vary from 0.25 to 2 megohms. A screen by-pass (C_4) of 0.1 μfd. will be adequate in all cases.

Table I shows typical values for some of the more popular tube types used in speech amplifiers. The stage gain and peak undistorted output voltage also are given. Other operating conditions are, of course, possible. The value of the grid resistor, R_2, does not affect any of these quantities, but it should not exceed the maximum value recommended by the manufacturer for the particular tube used.

The resistance-capacity filter (§ 2-11) formed by C_2R_5 is a *decoupling circuit* which isolates the stage from the power supply, so that unwanted coupling between it and other stages through the output impedance of the power supply is eliminated. Such coupling is a cause of low-frequency oscillation (*motorboating*) in multi-stage resistance-coupled amplifiers.

TABLE I — TYPICAL VOLTAGE AMPLIFIER DATA

Tube Type	R_3 (*megohms*)	R_6 (*megohms*)	R_1 (*ohms*)	*Peak Output Volts*	*Voltage Gain*
6C5	0.1	—	6000	88	13
6J5	0.1	—	3000	64	14
6F5, 6SF5	0.25	—	3000	54	63
6J7	0.25	1.2	1200	104	140
6SJ7	0.25	1.0	900	88	167
	0.5	2.0	1300	64	200

Other values (Fig. 512): C_1, 10 μfd. (low-voltage electrolytic); C_2, 8-μfd. electrolytic; C_3, C_4, 0.1-μfd. paper; R_2, 0.1 to 1 megohm; R_4, 0.5 megohm; R_5, 10,000 to 50,000 ohms. Data are based on a plate-supply voltage of 300; lower values will reduce the undistorted peak output voltage in proportion, but will not materially affect the voltage gain.

Transformer coupling — Transformer coupling between stages ordinarily is used only when power is to be transferred (in such a case resistance coupling is very inefficient), or when it is necessary to couple between a single-ended and a push-pull stage. Triodes having an amplification factor of 20 or less are used in transformer-coupled voltage amplifiers.

Representative circuits for coupling single-ended to push-pull stages are shown in Fig. 513. That at A uses a combination of resistance and transformer coupling, and may be used for exciting the grids of a Class-A or AB_1 following stage. The resistance coupling is used to keep the d.c. plate current from flowing through the transformer primary, thereby preventing a reduction in primary inductance below its no-current value (§ 8-4). This improves the low-frequency response. With the triodes ordinarily used (6C5, 6J5, etc.), the gain is equal to that with resistance coupling (typical values in Table I) multiplied by the secondary-to-primary turns ratio of the transformer. This ratio generally is 2:1.

In B the transformer primary is in series with the plate of the tube, and thus must carry the tube plate current. When the following amplifier operates without grid current, the voltage gain of the stage is practically equal to the μ of the tube multiplied by the transformer ratio. This circuit also is suitable for transferring power (within the capabilities of the tube) as in the case of a following Class-AB_2 stage used as a driver for a Class-B modulator.

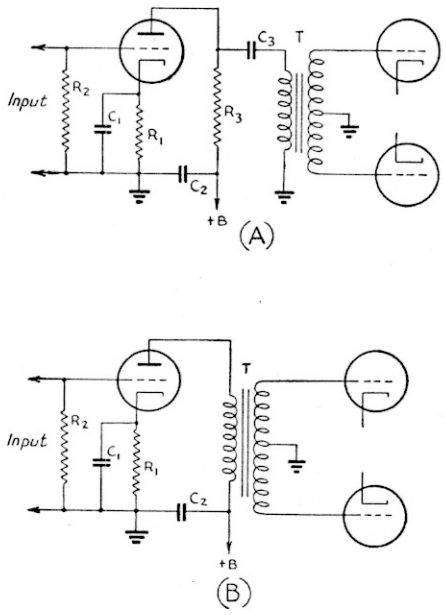

Fig. 513 — Transformer-coupled amplifier circuits for driving a push-pull amplifier. A is for resistance-transformer coupling; B, for transformer coupling. Designations correspond to those in Fig. 512. In A, values can be taken from Table I. In B, the cathode resistor is calculated from the rated plate current and grid bias as given for the particular type of tube used (§ 3-6).

Gain control — The overall gain of the amplifier may be changed to suit the output level of the microphone, which will vary with voice intensity and distance of the speaker from the microphone, by varying the proportion of a.c. voltage applied to the grid of one of the stages. This is done by means of an adjustable voltage divider (§ 2-6), commonly called a "potentiometer" or "volume control," as shown in Fig. 514. The actual voltage applied between

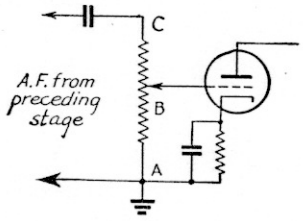

Fig. 514 — Audio gain control circuit.

grid and cathode will be very nearly equal to the ratio of the resistance between AB to the total resistance, AC, multiplied by the a.c. input voltage appearing across AC. The gain control is usually also the grid resistor for the amplifier stage with which it is associated.

The gain-control potentiometer should be near the input end of the amplifier so that there will be no danger of overloading the stages ahead of the gain control. With carbon microphones the gain control may be placed directly across the microphone transformer secondary, but with other types the gain control usually will affect the frequency response of the microphone when connected directly across it. The control therefore usually is placed in the grid circuit of the second stage.

Phase inversion — Push-pull output may be secured with resistance coupling by using an extra tube, as shown in Fig. 515. There is a phase shift of 180 degrees through any normally operating resistance-coupled stage (§ 3-3), and the extra tube is used purely to provide this phase shift without additional gain. The outputs of the two tubes are then added to give push-pull excitation to the next amplifier.

In Fig. 515, V_1 is the regular amplifier, connected in normal fashion to the grid of one of the push-pull tubes. The next-stage grid resistor is tapped, so that part of the output voltage is fed to the grid of the phase inverter, V_2. This tube then amplifies the signal and applies it in reverse phase to the grid of the second push-pull tube. Two similar tubes should be used at V_1 and V_2, with identical plate resistors and output-coupling condensers. The tap on R_4 is adjusted to make V_1 and V_2 give equal voltage outputs, so that balanced excitation is applied to the grids of the following stage.

The cathode resistor, R_6, commonly is left unby-passed, since this tends to help balance the circuit. For convenience, double-triode tubes frequently are used as phase inverters.

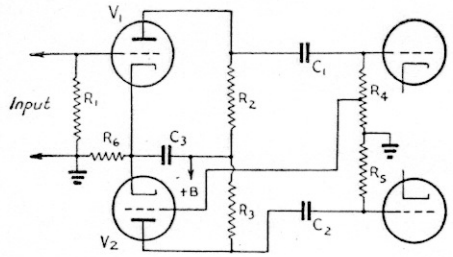

Fig. 515 — Phase-inverter circuit for resistance-coupled push-pull output. With a double-triode tube (such as the 6N7) the following values are typical: R_1, R_4, R_5 — 0.5 megohm. R_2, R_3 — 0.1 megohm. R_6 — 1500 ohms. C_1, C_2 — 0.1 μfd. R_4 should be tapped as described in the text. The voltage gain of a stage using these constants is 22.

Output limiting — It is desirable to modulate as heavily as possible without overmodulating, yet it is difficult to speak into the microphone at a constant intensity. To maintain reasonably constant output from the modulator in spite of variations in speech intensity, it is possible to use automatic gain control which follows the *average* (not instantaneous) variations in speech amplitude. This is accomplished by rectifying and filtering (§ 8-2, 8-3) some of the audio output and applying the rectified and filtered d.c. to a control electrode in an early stage in the amplifier.

A practical circuit for this purpose is shown in Fig. 516. The rectifier must be connected, through the transformer, to a tube capable of

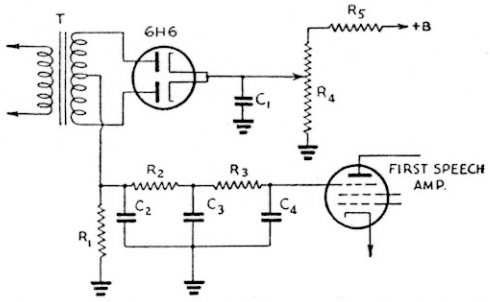

Fig. 516 — Speech amplifier output-limiting circuit. C_1, C_2, C_3, C_4 — 0.1-μfd. R_1, R_2, R_3 — 0.25 megohm. R_4 — 25,000-ohm pot. R_5 — 0.1 megohm. T — See text.

delivering some power output (a small part of the output of the power stage may be used) or else a separate amplifier for the rectifier circuit alone may have its grid connected in parallel with that of the last voltage amplifier. Resistor R_4 in series with R_5 across the plate supply provides variable bias on the rectifier plates, so that the limiting action can be delayed until a desired microphone input level is reached. R_2, R_3, C_2, C_3, and C_4 form the filter (§ 2-11), and the output of the rectifier is connected to the suppressor grid of the pentode first stage of the speech amplifier.

A step-down transformer with a turns ratio such as to give about 50 volts when its primary is connected to the output circuit of the power stage should be used. A half-wave rectifier may be used instead of the full-wave circuit shown, although satisfactory filtering will be more difficult to achieve.

Noise — It is important that the noise level in a speech amplifier be low compared to the level of the desired signal. Noise in the speech amplifier is caused chiefly by hum, which may be the result of insufficient power-supply filtering or may be introduced into the grid circuit of a tube by magnetic or electrostatic means from heater wiring. The plate voltage for the amplifier should be free from ripple (§ 8-4), particularly the voltage applied to the low-level stages. A two-section condenser-input filter (§ 8-5) usually is satisfactory. The decoupling circuits mentioned in the preceding paragraphs also are helpful in reducing plate-supply hum.

Hum from heater wiring may be reduced by keeping the wiring well away from ungrounded components or wiring, particularly in the vicinity of the grid of the first tube. Complete shielding of the microphone jack is advisable, and when tubes with grid caps instead of the single-ended types are used the caps and the exposed wiring to them should be shielded. Heater wiring preferably should run in the corners of a metal chassis, to reduce the magnetic field. A ground should be made either on one side of the heater circuit or to the center-tap of the heater winding. The shells of metal tubes should be grounded; glass tubes require separate shields, especially when used in low-level stages. Heater connections to the tube sockets should be kept as far as possible from the plate and grid prongs, and the heater wiring to the sockets should be kept close to the chassis. A connection to a good ground (such as a cold water pipe) also is advisable. The speech amplifier always should be constructed on a metal chassis, with all ground connections made directly to the metal chassis.

When the power supply is mounted on the same chassis with the speech amplifier, the power transformer and filter chokes should be well separated from audio transformers in the amplifier proper to reduce magnetic coupling, which would cause hum and raise the residual noise level.

¶ 5-10 Checking 'Phone Transmitter Operation

Modulation percentage — The most reliable method of determining percentage of modulation is by means of the cathode-ray oscilloscope (§ 3-9). The oscilloscope gives a direct picture of the modulated output of the transmitter, and by its use the waveform errors inherent in other types of measurements are eliminated.

Two types of oscilloscope patterns may be obtained, known as the "wave envelope" and "trapezoid." The former shows the shape of the modulation envelope (§ 5-2) directly, while

the latter in effect plots the modulation characteristic (§ 5-2) of the modulated stage on the cathode-ray tube screen. To obtain the wave-envelope pattern, the oscilloscope must have a horizontal sweep circuit. The trapezoidal pattern requires only the oscilloscope, the sweep circuit being supplied by the transmitter itself. Fig. 517 shows methods of connecting the oscilloscope to the transmitter for both types of patterns. The oscilloscope connections for the wave-envelope pattern, Fig. 517-A, are usually simpler than those for the trapezoidal figure. The vertical-deflection plates are coupled to the amplifier tank coil or an antenna coil by means of a pick-up coil of a few turns connected to the oscilloscope through a twisted-pair line. The position of the pick-up coil is varied until a carrier pattern, Fig. 518-B, of suitable height is obtained. The sweep voltage should be adjusted to make the width of the pattern somewhat more than half the diameter of the screen. It is frequently helpful in eliminating r.f. harmonics from the pattern to connect a resonant circuit, tuned to the operating frequency, between the vertical deflection plates, using link coupling between this circuit and the transmitter tank circuit.

With the application of voice modulation, a rapidly changing pattern of varying height will be obtained. When the maximum height of this pattern is just twice that of the carrier alone, the wave is being modulated 100 per cent (§ 5-2). This is illustrated by Fig. 518-D, where the point X represents the sweep line (reference line) alone, YZ is the carrier height, and PQ is the maximum height of the modulated wave. If the height is greater than the distance PQ, as illustrated in E, the wave is overmodulated in the upward direction. Overmodulation in the downward direction is indicated by a gap in the pattern at the reference axis, where a single bright line appears on the screen. Overmodulation in either direction may take place even when the modulation in the other direction is less than 100 per cent. Assuming that the modulation is symmetrical, however, any modulation percentage can be measured directly from the screen by measuring the maximum height with modulation and the height of the carrier alone; calling these two heights h_1 and h_2 respectively, the modulation percentage is

$$\frac{h_1 - h_2}{h_2} \times 100$$

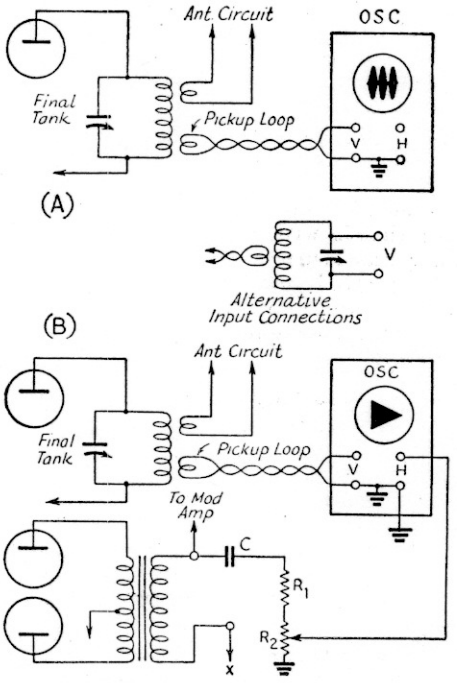

Fig. 517 — Methods of connecting an oscilloscope to the modulated r.f. amplifier for checking modulation.

Connections for the trapezoidal pattern are shown in Fig. 517-B. The vertical plates are similarly coupled to the transmitter tank circuit through a pick-up loop; the tuned input circuit to the oscilloscope may also be used. The horizontal plates are coupled to the output of the modulator through a voltage divider (§ 2-6), R_1R_2, the resistance of R_2 being variable to permit adjustment of the audio voltage to a suitable value to give a satisfactory horizontal sweep on the screen. R_2 may be a 0.25-megohm volume control resistor. The value of R_1 will depend upon the audio output voltage of the modulator. This voltage is equal to $\sqrt{PR}$, where P is the audio power output of the modulator and R is the modulating impedance of the modulated r.f. amplifier. In the case of grid-bias modulation with a 1:1 output transformer, it will be satisfactory to assume that the a.c. output voltage of the modulator is equal to $0.7E$ for a single tube or $1.4E$ for a push-pull stage, where E is the d.c. plate voltage on the modulator. If the transformer ratio is other than 1:1, the voltage so calculated should be multiplied by the actual secondary-to-primary turns ratio. The total resistance of R_1 and R_2 in series should be 0.25 megohm for every 150 volts of modulator output; for example, if the modulator output voltage is 600, the total resistance should be four (600/150) times 0.25 megohm, or 1 megohm. Then, with 0.25 megohm at R_2, R_1 should be 0.75 megohm. The blocking condenser, C, should be 0.1 μfd or more, and its voltage rating should be greater than the maximum voltage appearing in the circuit. With plate modulation, this is twice the d.c. voltage applied to the plate of the modulated amplifier.

The trapezoidal patterns are shown in Fig. 518 at F to J, each alongside the corresponding wave-envelope pattern. With no signal, only the cathode-ray spot appears on the screen. When the unmodulated carrier is applied, a vertical line appears; the length of the line

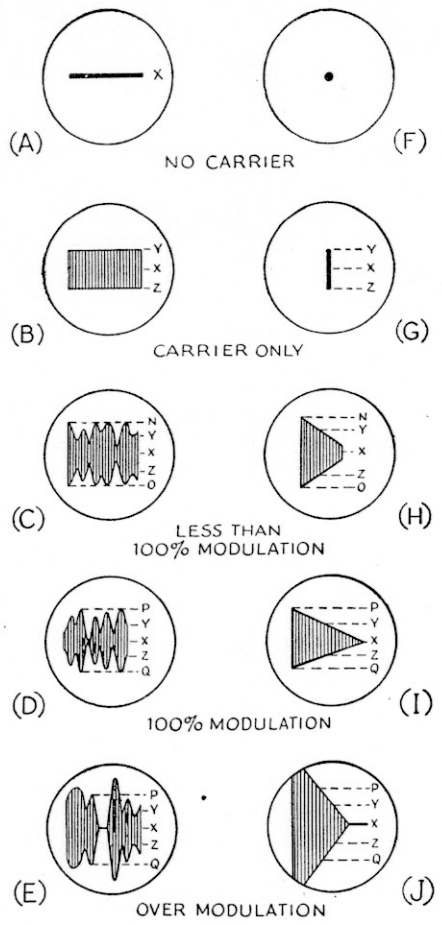

Fig. 518 — Wave-envelope and trapezoidal patterns encountered under different conditions of modulation.

should be adjusted, by means of the pick-up coil coupling, to a convenient value. When the carrier is modulated, the wedge-shaped pattern appears; the higher the modulation percentage, the wider and more pointed the wedge becomes. At 100 per cent modulation it just makes a point on the axis, A, at one end, and the height, PQ, at the other end is equal to twice the carrier height, YZ. Overmodulation in the upward direction is indicated by increased height over PQ, and in the downward direction by an extension along the axis X at the pointed end. The modulation percentage may be found by measuring the modulated and unmodulated carrier heights, in the same way as with the wave-envelope pattern.

Non-symmetrical waveforms — In voice waveforms the average maximum amplitude in one direction from the axis frequently is greater than in the other direction, although the average *energy* on both sides is the same. For this reason the percentage of modulation in the "up" direction frequently differs from that in the "down" direction. With a given voice and microphone, this difference in modulation percentage is usually always in the same direction. Since overmodulation in the downward direction causes more out-of-channel interference than overmodulation upward because of the steeper wavefront (§ 6-1), it is advisable to "phase" the modulation so that the side of the voice waveform having the larger excursions causes the instantaneous carrier power to increase and the smaller excursions to cause a power decrease. This reduces the likelihood of overmodulation on the "down" peak. The direction of the larger excursions can readily be found by careful observation of the oscilloscope pattern. The phase can be reversed by reversing the connections of one winding of any transformer in the speech amplifier or modulator.

Modulation monitoring — While it is desirable to modulate as fully as possible, 100 per cent modulation should not be exceeded, particularly in the downward direction, because harmonic distortion will be introduced and the channel width increased (§ 5-2), thus causing unnecessary interference to other stations. The oscilloscope may be used to provide a continuous check on the modulation, but simpler indicators may be used for the purpose, once calibrated. A convenient indicator, when a Class-B modulator (§ 5-6) is used, is the plate milliammeter in the Class-B stage, since plate current fluctuates with the voice intensity. Using the oscilloscope, determine the gain-control setting and voice intensity which gives 100 per cent modulation on voice peaks, and simultaneously observe the maximum Class-B plate-milliammeter reading on the peaks. When this maximum reading is obtained, it will suffice in regular operation to adjust the gain so that it is not exceeded.

A sensitive rectifier-type voltmeter (copper-oxide type) also can be used for modulation monitoring. It should be connected across the output circuit of an audio driver stage where the power level is a few watts, and similarly calibrated against the oscilloscope to determine the reading which represents 100 per cent modulation.

The plate milliammeter of the modulated r.f. stage may also be used as an indicator of overmodulation. Since the average plate current is constant (§ 5-3, 5-4, 5-5) when the amplifier is linear, the reading will be the same with or without modulation. When the amplifier is overmodulated, especially in the downward direction, the operation is no longer linear and the average plate current will change. A flicker of the pointer may therefore be taken as an indication of overmodulation or non-linearity. However, it is possible that the average plate current will remain constant with considerable overmodulation under some operating conditions, so that an indicator of this type is not wholly reliable unless it has been checked previously against an oscilloscope.

Linearity — The linearity (§ 5-2) of a modulated amplifier may readily be checked with

the oscilloscope. The trapezoidal pattern is more easily interpreted than the wave envelope pattern, and less auxiliary equipment is required. The connections are the same as for measuring modulation percentage (Fig. 517). If the amplifier is perfectly linear, the sloping sides of the trapezoid will be perfectly straight from the point at the axis up to at least 100 per cent modulation in the upward direction. Nonlinearity will be shown by curvature of the sides. Curvature near the point, extending the point farther along the axis than would occur with straight sides, indicates that the output power does not decrease rapidly enough in this region; it may also be caused by imperfect neutralization (a push-pull amplifier is recommended because better neutralization is possible than with single-ended amplifiers) or by r.f. leakage from the exciter through the final stage. The latter condition can be checked by removing the plate voltage from the modulated stage, when the carrier should disappear, leaving only the beam spot remaining on the screen (Fig. 518-F). If a small vertical line remains, the amplifier should be re-neutralized to eliminate it; if this does not suffice, it is an indication that r.f. is being picked up from lower-power stages, either by coupling through the final tank circuit or through the oscilloscope pick-up circuit.

Inward curvature at the large end of the pattern is caused by improper operating conditions of the modulated amplifier, usually improper bias or insufficient excitation, or both, with plate modulation. In grid-bias and cathode-modulated systems, the bias, excitation and plate loading are not correctly proportioned when such curvature occurs, usually because the amplifier has been adjusted to have too-high carrier efficiency without modulation (§ 5-4, 5-5).

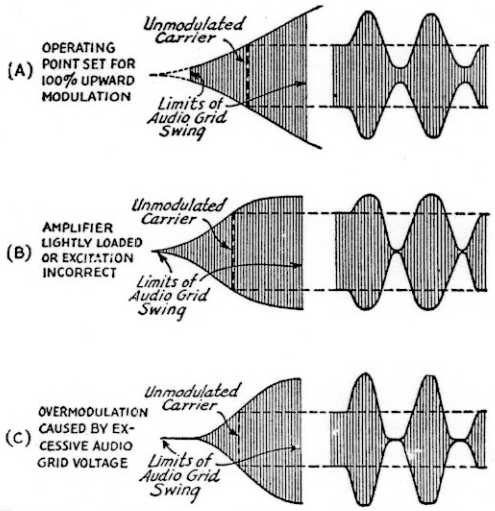

Fig. 519 — Oscilloscope patterns representing proper and improper adjustments for grid-bias or cathode modulation. The pattern obtained with a correctly adjusted amplifier is shown at A. The other drawings indicate non-linear modulation from typical causes.

For the wave-envelope pattern, it is necessary to have a linear horizontal-sweep circuit in the oscilloscope and a source of sine-wave audio signal voltage (such as an audio oscillator or signal generator) which can be synchronized with the sweep circuit. The linearity can be judged by comparing the wave envelope with a true sine wave. Distortion in the audio circuits will affect the pattern in this case (such distortion has no effect on the trapezoidal pattern, which shows the modulation characteristic of the r.f. amplifier alone), and it is also readily possible to misjudge the shape of the modulation envelope, so that the wave envelope is less useful than the trapezoid for checking linearity of the modulated amplifier.

Fig. 519 shows typical patterns of both types. The cause of the distortion is indicated for grid-bias and suppressor modulation. The patterns at A, although not truly linear, are representative of properly operated grid-bias modulation systems. Better linearity can be obtained with plate modulation of a Class-C amplifier.

Faulty patterns — The drawings of Figs. 518 and 519 show what is normally to be expected in the way of pattern shapes when the oscilloscope is used to check modulation. If the actual patterns differ considerably from those shown, it is probable that the pattern is faulty rather than the transmitter. It is important that only r.f. from the modulated stage be coupled to the oscilloscope, and then only to the vertical plates. The effect of stray r.f. from other stages in the transmitter has been mentioned in the preceding paragraph. If r.f. is present also on the horizontal plates, the pattern will lean to one side instead of being upright. If the oscilloscope cannot be moved to a spot where the unwanted pick-up disappears, a small by-pass condenser (10 $\mu\mu$fd.) should be connected across the horizontal plates as close to the cathode-ray tube as possible. An r.f. choke (2.5 mh. or smaller) may also be connected in series with the ungrounded horizontal plate.

"Folded" trapezoidal patterns occur when the audio sweep voltage is taken from some point in the audio system other than that where the a.f. power is applied to the modulated stage. Such patterns are caused by a phase difference between the sweep voltage and the modulating voltage. The connections should always be as shown in Fig. 517-B.

Plate-current shift — As mentioned above, the d.c. plate current of a modulated amplifier will be the same with and without modulation so long as the amplifier operation is perfectly linear and other conditions remain unchanged. This also assumes that the modulator is working within its capabilities. Because there is usually some curvature of the modulation characteristic with grid-bias modulation there is normally a slight upward change in plate current of a stage so modulated, but this occurs only at high modulation percentages and is

barely detectable under the usual conditions of voice modulation.

With plate modulation, a downward shift in plate current may indicate one or more of the following:

1) Insufficient excitation to the modulated r.f. amplifier.
2) Insufficient grid bias on the modulated stage.
3) Wrong load resistance for the Class-C r.f. amplifier.
4) Insufficient output capacity in the filter of the modulated-amplifier plate supply.
5) Heavy overloading of the Class-C r.f. amplifier tube or tubes.

Any of the following may cause an upward shift in plate current:

1) Overmodulation (excessive audio power, audio gain too great).
2) Incomplete neutralization of the modulated amplifier.
3) Parasitic oscillation in the modulated amplifier.

When a common plate supply is used for both a Class-B (or Class AB) modulator and a modulated r.f. amplifier, the plate current of the latter may "kick" downward because of poor power-supply voltage regulation (§ 8-1) with the varying additional load of the modulator on the supply. The same effect may occur with high-power transmitters because of poor regulation of the a.c. supply mains, even when a separate power-supply unit is used for the Class-B modulator. Either condition may be detected by measuring the plate voltage applied to the modulated stage; in addition, poor line regulation also may be detected by observing if there is any downward shift in filament or line voltage.

With grid-bias modulation, any of the following may be the cause of a plate current shift greater than the normal mentioned above:

Downward kick: Too much r.f. excitation; insufficient operating bias; distortion in modulator or speech amplifier; too-high resistance in bias supply; insufficient output capacity in plate-supply filter to modulated amplifier; amplifier plate circuit not loaded heavily enough; plate-circuit efficiency too high under carrier conditions.

Upward kick: Overmodulation (excessive audio voltage); distortion in audio system; regeneration because of incomplete neutralization; operating grid bias too high.

A downward kick in plate current will accompany an oscilloscope pattern like that of Fig. 519-B; the pattern with an upward kick will look like Fig. 519-A, with the shaded portion extending farther to the right and above the carrier, for the "wedge" pattern.

Noise and hum on carrier — These may be detected by listening to the signal on a receiver sufficiently removed from the transmitter to avoid overloading. The hum level should be low compared to the voice at 100 per cent modulation. Hum may come either from the speech amplifier and modulator or from the r.f. section of the transmitter. Hum from the r.f. section can be detected by completely shutting off the modulator; if hum remains when this is done, the power-supply filters for one or more of the r.f. stages have insufficient smoothing (§ 8-4). With a hum-free carrier, hum introduced by the modulator can be checked by turning on the modulator but leaving the speech amplifier off; power-supply filtering is the likely source of such hum. If carrier and modulator are both clean, connect the speech amplifier and observe the increase in hum level. If the hum disappears with the gain control at minimum, the hum is being introduced in the stage or stages preceding the gain control. The microphone also may pick up hum, a condition which can be checked by removing the microphone from the circuit but leaving the first speech-amplifier grid circuit otherwise unchanged. A good ground on the microphone and speech system usually is essential to hum-free operation.

Hum can be checked with the oscilloscope, where it appears as modulation on the carrier in the same way as the normal modulation. While the percentage usually is rather small, if the carrier shows modulation with no speech input hum is the likely cause. The various parts of the transmitter may be checked through as described above.

Spurious sidebands — A superheterodyne receiver having a crystal filter (§ 7-8, 7-11) is needed for checking spurious sidebands outside the normal communication channel (§ 5-2). The r.f. input to the receiver must be kept low enough, by removing the antenna or by adequate separation from the transmitter, to avoid overloading and consequent spurious receiver responses (§ 7-8). With the crystal filter in its sharpest position and the beat oscillator turned on, tune through the region outside the normal channel limits (3 to 4 kilocycles each side of the carrier) while another person talks into the microphone. Spurious sidebands will be observed as intermittent beat notes coinciding with voice peaks, or, in bad cases of distortion or overmodulation, as "clicks" or crackles well away from the carrier frequency. Sidebands more than 4 kilocycles from the carrier should be of negligible strength in a properly modulated 'phone transmitter. The causes are overmodulation or non-linear operation (§ 5-3).

R.f. in speech amplifier — A small amount of r.f. current in the speech amplifier — particularly in the first stage, which is most susceptible to such r.f. pick-up — will cause overloading and distortion in the low-level stages. Frequently also there is a regenerative effect which causes an audio-frequency oscillation or "howl" to be set up in the audio system. In such cases the gain control cannot be advanced very far before the howl builds up,

even though the amplifier may be perfectly stable when the r.f. section of the transmitter is not turned on.

Complete shielding of the microphone, microphone cord, and speech amplifier are necessary to prevent r.f. pick-up, and a ground connection separate from that to which the transmitter is connected is advisable. Unsymmetrical or capacity coupling to the antenna (single-wire feed, feeders tapped on final tank circuit, etc.) may be responsible in that these systems sometimes cause the transmitter chassis to take an r.f. potential above ground. Inductive coupling to a two-wire transmission line is advisable. This antenna effect can be checked by disconnecting the antenna and dissipating the power in a dummy antenna (§ 4-9), when it usually will be found that the r.f. feed-back disappears. If it does not, the speech amplifier and microphone shielding are at fault.

¶ 5-11 Frequency Modulation

Principles — In frequency modulation the carrier amplitude is constant and the output frequency of the transmitter is made to vary about the carrier or mean frequency at a rate corresponding to the audio frequencies of the speech currents. The extent to which the frequency changes in one direction from the unmodulated or carrier frequency is called the *frequency deviation.* It corresponds to the change of carrier amplitude in the amplitude-modulation system (§ 5-2). Deviation is usually expressed in kilocycles, and is equal to the difference between the carrier frequency and either the highest or lowest frequency reached by the carrier in its excursions with modulation. There is no modulation percentage, in the usual sense; with suitable circuit design the deviation may be made as large as desired without encountering any effect equivalent to overmodulation in the amplitude-modulated system.

Deviation ratio — The ratio of the maximum frequency deviation to the audio frequency of the modulation is called the *deviation ratio.* This ratio is also called the modulation index. Unless otherwise specified, it is taken as the ratio of the maximum frequency deviation to the *highest* audio frequency to be transmitted.

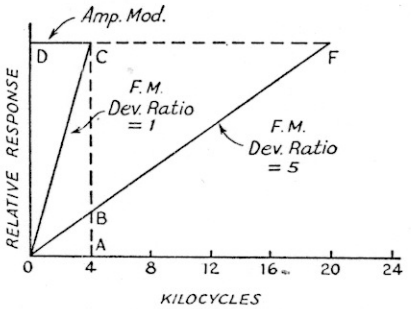

Fig. 520 — Triangular spectrum showing the noise response in an f.m. receiver compared with amplitude modulation. Deviation ratios of 1 and 5 are shown.

Advantages of f.m. — The chief advantage of frequency modulation over amplitude modulation is noise reduction at the receiver. All electrical noises in the radio spectrum, including those originating in the receiver, are r.f. oscillations which vary in amplitude, this variation causing the noise response in amplitude-modulation receivers. If the receiver does not respond to amplitude variations but only to frequency changes, noise can affect it only by causing a phase shift which appears as frequency modulation on the signal. The effect of such frequency modulation by the noise can be made small by making the frequency change (deviation) in the signal large.

A second advantage is that the power required for modulation is inconsequential, since there is no power variation in the modulated output of the transmitter.

Triangular spectrum — The way in which noise is reduced by a large deviation ratio is illustrated by Fig. 520. In this figure the noise is assumed to be evenly distributed over the channel used, an assumption which is almost always true. It is also assumed that audio frequencies above 4000 cycles (4 kc.) are not necessary to voice communication, and that the audio system in the receiver has no response above this frequency. Then, if an amplitude modulation receiver is used and its selectivity is such that there is no attenuation of sidebands (§ 5-2) below 4000 cycles, the noise components of all frequencies within the channel will produce equal response when they beat with a carrier centered in the channel. The response under these conditions is shown by the line *DC.*

In the f.m. receiver the output amplitude is proportional to the frequency deviation, and noise components in the channel can be considered to frequency-modulate the steady carrier with a deviation proportional to the difference between the actual frequency of the component and the frequency of the carrier, and also to give an audio-frequency beat of the same frequency difference. This leads to a rising response characteristic, such as the line *OC,* where the noise amplitude is proportional to the audio beat frequency. The average noise power output is proportional to the square root of the sum of the squares of all the amplitude values (§ 2-7), so that the noise power with frequency modulation having a deviation ratio of 1 is only one-third that with amplitude modulation, or an improvement of 4.75 db.

If the deviation ratio is increased to 5, the noise response is represented by the line *OF.* Since only frequencies up to 4000 cycles are reproduced in the output, however, the audible noise is confined to the triangle *OAB.* These relations hold only when the carrier is strong compared to the noise. For reception of stations with weak signal strength, the signal-to-noise ratio is better with a deviation ratio of 1.

Linearity — A transmitter in which frequency deviation is directly proportional to the amplitude of the modulating signal is said to be *linear*. It is essential also that the carrier amplitude remain constant under modulation, which in turn requires that the transmitter tuned circuits be broad enough to handle without discrimination the range of frequencies transmitted. This requirement is easily met under ordinary conditions.

Sidebands — In frequency modulation there is a series of sidebands on either side of the carrier frequency for each audio-frequency component in the modulation. In addition to the usual sum and difference frequencies (§ 5-2) there are also beats at harmonics of the fundamental modulating frequency, even though the latter may be a pure tone. This occurs because of the necessity for maintaining the proper phase relationships between the carrier and sidebands to keep the power output constant. Hence a frequency-modulated signal inherently occupies a wider channel than an amplitude-modulated signal, and because of the necessity for conserving space in the usual communication spectrum the use of f.m. is confined to the very-high frequencies in the region above 28 Mc.

The number of sidebands for a single modulating frequency increases with the frequency deviation. When the deviation ratio is of the order of 5 the sidebands beyond the maximum frequency deviation are usually negligible, so that the channel required is approximately twice the frequency deviation.

§ 5-12 Methods of Frequency Modulation

Requirements and methods — At present there are no fixed standards of frequency deviation in amateur work. Since a deviation ratio of 5 is considered high enough in any case, the maximum deviation necessary is 15 to 20 kc. for an upper audio-frequency limit of 3000 or 4000 cycles (§ 5-2), or a channel width of 30 to 40 kc. The permissible deviation is determined by the receiver (§ 7-18), since deviation beyond the limits of the receiver pass-band causes distortion. If the transmitter is designed to be linear (§ 5-11) with a deviation of about 15 kc., it can be used at a lower deviation ratio simply by reducing the gain in the speech amplifier. Thereby it can be made to conform to the requirements of the particular receiver in use.

The several possible methods of frequency modulation include mechanical modulation (for instance, varying condenser plate spacing in accordance with voice vibrations), initial phase modulation which later is transformed into frequency modulation, and direct frequency modulation of an oscillator by electrical means. The latter, in the form of the *reactance modulator*, is the simplest system.

The reactance modulator — The reactance modulator is a vacuum-tube amplifier connected to the r.f. tank circuit of an oscillator in such a way as to act as a variable inductance or capacity, of a value dependent upon the instantaneous a.f. voltage applied to its grid. Fig. 521 is a representative circuit. The control

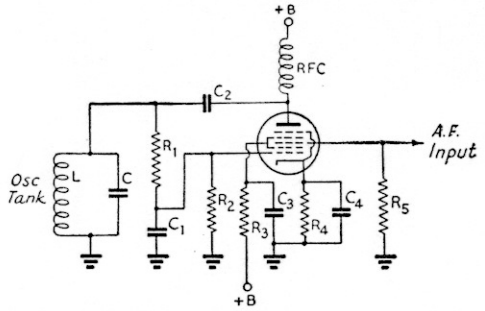

Fig. 521 — Reactance modulator circuit using a 6L7 tube.
C — Tank capacity. C_1 — 3–10 μμfd. C_2 — 250 μμfd.
C_3 — 8-μfd. electrolytic (a.f. by-pass) in parallel with 0.01-μfd. paper (r.f. by-pass).
C_4 — 0.01 μfd. L — Oscillator tank inductance.
R_1 — 50,000 ohms. R_2, R_5 — 0.5 megohm.
R_3 — 30,000 ohms. R_4 — 300 ohms.

grid circuit of the 6L7 tube is connected across the small capacity, C_1, which is in series with the resistor, R_1, across the oscillator tank circuit. Any type of oscillator circuit (§ 3-7) may be used. R_1 is large compared to the reactance (§ 2-8) of C_1, so the r.f. current through R_1C_1 will be practically in phase (§ 2-7) with the r.f. voltage appearing at the terminals of the tank circuit. However, the voltage across C_1 will lag the current by 90 degrees (§ 2-8). The r.f. current in the plate circuit of the 6L7 will be in phase with the grid voltage (§ 3-3), and consequently is 90 degrees behind the current through C_1, or 90 degrees behind the r.f. tank voltage. This lagging current is drawn through the oscillator tank, giving the same effect as though an inductance were connected across the tank (in an inductance the current lags the voltage by 90 degrees — § 2-8). The frequency is therefore increased in proportion to the lagging plate current of the modulator. This, in turn, is determined by the a.f. voltage applied to the No. 3 grid of the 6L7; hence the oscillator frequency varies with the audio signal voltage.

Other circuit arrangements to produce the same effect can be used. It is convenient to use a tube (such as the 6L7) in which the r.f. and a.f. voltages can be applied to separate control grids; however, both voltages may be applied to the same grid provided suitable precautions are taken to prevent r.f. from flowing in the external audio circuit, and vice versa (§ 2-13).

The modulated oscillator usually is operated on a relatively low frequency, so that a high order of carrier stability can be secured. Frequency multipliers are used to raise the frequency to the final frequency desired. The frequency deviation increases with the number of times the initial frequency is multiplied;

for instance, if the oscillator is operated on 7 Mc. and the output frequency is to be 112 Mc., an oscillator frequency deviation of 1000 cycles will be raised to 16,000 cycles at the output frequency.

Design considerations — The sensitivity of the modulator (frequency change per unit change in grid voltage) increases when C_1 is made smaller, for a fixed value of R_1, and also increases with an increase in L/C ratio in the oscillator tank circuit. Since the carrier stability of the oscillator depends on the L/C ratio (§ 3-7), it is desirable to use the highest tank capacity which will permit the desired deviation to be secured while keeping within the limits of linear operation. When the circuit of Fig. 521 is used in connection with a 7-Mc. oscillator, a linear deviation of 2000 cycles above and below the carrier frequency can be secured when the oscillator tank capacity is approximately 200 $\mu\mu$fd. A peak a.f. input of two volts is required for full deviation. At 56 Mc. the maximum deviation would be 8 × 2000, or 16 kc.

Since a change in any of the voltages on the modulator tube will cause a change in r.f. plate current, and consequently a frequency change, it is advisable to use a regulated plate supply for both modulator and oscillator. At the low voltages used (250 volts), the required stabilization can be secured by means of gaseous regulator tubes (§ 8-8).

Speech amplification — The speech amplifier preceding the modulator follows ordinary design (§ 5-9), except that no power is required from it and the a.f. voltage taken by the modulator grid usually is small — not more than 10 or 15 volts, even with large modulator tubes. Because of these modest requirements, only a few speech-amplifier stages are needed; a two-stage amplifier consisting of a pentode followed by a triode, both resistance-coupled, will suffice for crystal microphones (§ 5-8).

R.f. amplifier stages — The frequency multiplier and output stages following the modulated oscillator may be designed and adjusted in accordance with ordinary principles. No special excitation requirements are imposed, since the amplitude of the output is constant. Enough frequency multiplication must be used to give the desired maximum deviation at the final frequency; this depends upon the maximum linear deviation available from the modulator-oscillator. All stages in the transmitter should be tuned to resonance, and careful neutralization (§ 4-7) of any straight amplifier stages is necessary to prevent r.f. phase shifts which might cause distortion.

Checking operation — The two quantities to be checked in the f.m. transmitter are linearity and frequency deviation. With a modulator of the type shown in Fig. 521, both the r.f. and a.f. voltages are small enough to make the operation Class A (§ 3-4), so that the plate current of the modulator is constant so long as operation is over the linear portions of the No. 1 and No. 3 grid characteristics. Hence, non-linearity will be indicated by a change in plate current as the a.f. modulating voltage is increased. The distortion will be within acceptable limits, with the tube and constants given for the circuit in Fig. 521, when the plate current does not change more than 5 per cent with signal.

Non-linearity is accompanied by a shift in the carrier frequency, so it also can be checked by means of a selective receiver such as one with a crystal filter (§ 7-11). A tone source is convenient for the test. Set the receiver for high selectivity, switch on the beat oscillator, and tune to the oscillator carrier frequency. (The check does not need to be made at the output frequency and the oscillator frequency usually is more convenient, since it will fall within the tuning range of a communications receiver.) Increase the modulating signal until a definite shift in carrier frequency is observed; this indicates the point at which non-linearity starts. The modulating signal should be kept below the level at which carrier shift is observed, for minimum distortion.

A selective receiver also can be used to check frequency deviation, again at the oscillator frequency. A source of tone of known frequency is required, preferably a continuously variable calibrated audio oscillator or signal generator. Tune in the carrier as described above, using the beat oscillator and high selectivity, and adjust the modulating signal to the maximum level at which linear operation is secured. Starting with the lowest frequency available, slowly raise the tone frequency while listening closely to the carrier beat note. As the tone frequency is raised the beat note first will decrease in intensity, then disappear entirely at a definite frequency, and finally come back and increase in intensity as the tone frequency is raised still more. The frequency at which the beat note disappears, multiplied by 2.4, is the frequency deviation at that level of modulating signal; for example, if the beat note disappears with an 800-cycle tone, the deviation is 2.4 × 800, or 1920 cycles. The deviation at the output frequency is the oscillator deviation multiplied by the number of times the frequency is multiplied; in this example, if the oscillator is on 7 Mc. and the output on 56 Mc., the final deviation is 1920 × 8, or 15.36 kc.

The output of the transmitter can be checked for amplitude modulation by observing the antenna current. It should not change from the unmodulated carrier value when the transmitter is modulated. Where there is no antenna ammeter in the transmitter, a flashlight lamp and loop can be coupled to the final tank coil to serve as a current indicator. If the amplitude is constant, the lamp brilliance will not change with modulation.

CHAPTER SIX

Keying

§ 6-1 Keying Principles and Characteristics

Requirements — The keying of a transmitter can be considered satisfactory if the method employed reduces the power output to zero when the key is open, or "up," and permits full power to reach the antenna when the key is closed, or "down." Furthermore, the keying system should accomplish this without producing keying transients or "clicks," which cause interference with other amateur stations and with local broadcast reception, and the keying process should not affect the frequency of the emitted wave.

Back-wave — From various causes, some energy may get through to the antenna during keying spaces. The effect then is as though the dots and dashes were only louder portions of a continuous carrier; in some cases, in fact, the *back-wave*, or signal heard during the keying spaces, may seem to be almost as loud as the keyed signal. Under these conditions the keying is hard to read. A pronounced back-wave often results when the amplifier stage feeding the antenna is keyed; it may be present because of incomplete neutralization (§ 4-7) of the final stage, allowing some energy to get to the antenna through the grid-plate capacity of the tube, or because of magnetic coupling between antenna coupling coils and one of the low-power stages.

A back-wave also may be radiated if the keying system does not reduce the input to the keyed stage to zero during keying spaces. This trouble will not occur in keying systems which cut off the plate voltage when the key is open, but may be present in grid-blocking systems (§ 6-3) if the blocking voltage is not great enough and in power-supply primary keying systems (§6-3) if only the final-stage power-supply primary is keyed.

Keying waveform and sidebands — A keyed c.w. signal can be considered equivalent to a modulated signal (§ 5-1), except that, instead of being modulated by sinusoidal waves and their harmonics, it is modulated by a rectangular wave, as in Fig. 601-A. If it were modulated by a sinusoidal wave of single frequency, as in Fig. 601-B, the only sidebands would be those equal to the carrier frequency plus and minus the modulation frequency (§ 5-2). A keying speed of 50 words per minute, sending sinusoidal dots, would give sidebands only 20 cycles either side of the carrier. However, when harmonics are present in the modulation the sidebands will extend out on both sides of the signal as far as the frequency of the highest harmonic. The rectangular wave form contains an infinite number of harmonics of the keying frequency, so a carrier modulated by truly rectangular dots would have sidebands covering the entire spectrum. Actually, the high-order harmonics are eliminated because of the selectivity of the tuned circuits (§ 2-10) in the transmitter, but there still is enough energy in the lower harmonics to extend the sidebands considerably. Considered from another viewpoint, whenever a pulse of current has a steep front (or back) high frequencies are certain to be present. If the pulse can be slowed down, or caused to *lag*, through a suitable filter circuit, the highest-order harmonics are filtered out.

Key clicks — Because the high-order harmonics exist only during the brief interval when the keying character is started or ended (when the amplitude of the keying wave is building up or dying down), their effects outside the normal communication channel are observed as pulses of very short duration. These pulses are called *key clicks*.

Tests have shown that practically all operators prefer to copy a signal which is "solid" on the "make" end of each dot or dash; i.e., one that does not build up too slowly but just slowly enough to have a slight click when the key is closed. The same tests indicate that the most pleasing and least difficult signal to copy, particularly at high speeds, is one that has a fairly soft "break" characteristic; i.e., one that has practically no click as the key is opened. A signal with heavy clicks on both make and break is difficult to copy at high speeds (and also causes considerable interference), but if it is too "soft" the dots and dashes will tend to run together. It is relatively simple to adjust the keying of a transmitter so that for all normal hand speeds (15 to 40 w.p.m.) the readability will be satisfactory

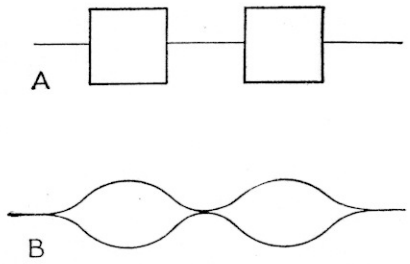

Fig. 601 — Extremes of possible keying waveshapes. A, rectangular characters; B, sine-wave characters.

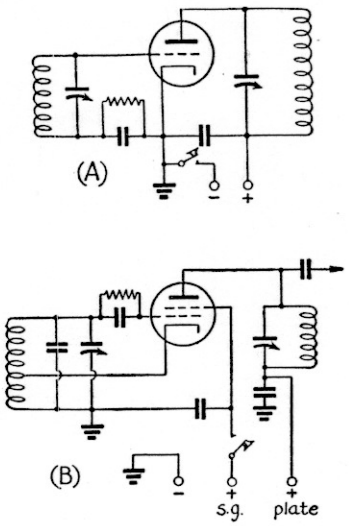

Fig. 602 — A, plate keying; B, screen-grid keying. Oscillator circuits are shown in both cases, but the same keying methods can be used with amplifier circuits.

while the keying still will not cause interference to reception of other signals near the frequency of the transmitter.

Break-in keying — Since, in code transmission, there are definite intervals between dots and dashes and between words, when no power is being radiated by the transmitter it is possible, with suitable keying methods, to allow the receiver to operate continuously and thus be capable of receiving incoming signals during the keying intervals. This practice facilitates communication, because the receiving operator can signal the transmitting operator, by holding down the key of his transmitter, whenever he has failed to copy part of the message, and thus obtain a repetition of the missing part without loss of time. This is called *break-in* operation.

Frequency stability — Keying should have no effect upon the output frequency of a properly designed and adjusted transmitter. However, in many instances keying will cause a "chirp," or small frequency change, at the instant of closing or opening the key, which makes the signal difficult to read. Multi-stage transmitters keyed in a stage subsequent to the oscillator usually are free from this condition, unless the keying causes line-voltage changes which in turn affect the frequency of the oscillator. When the oscillator is keyed for break-in operation, special care must be taken to insure that the signal does not have keying chirps.

Selecting the stage to key — It is advantageous from an operating standpoint to design the c.w. transmitter for break-in operation. In ordinary cases this dictates that the oscillator be keyed, since a continuously running oscillator will create interference in the receiver and thus prevent break-in operation on or near the transmitter frequency. On the other hand, it is easier to avoid a chirpy signal by keying a buffer or amplifier stage. In either case, the tubes following the keyed stage must be provided with sufficient fixed bias to limit the plate currents to safe values when the key is up and the tubes are not being excited (§ 8-9). Complete cut-off reduces the possibility of a back-wave if a stage other than the oscillator is keyed, but the keying waveform is not as well preserved and some clicks can be introduced even though the keyed stage itself produces no clicks. It is a good general rule to bias the tubes so that they draw a key-up plate current equal to about 5 per cent of the normal key-down value.

Keyed power — The power broken by the key is an important consideration, both from the standpoint of safety for the operator and that of arcing at the key contacts. Keying the oscillator or a low-power stage is favorable in both respects. The use of a keying relay is highly recommended when a high-power circuit is keyed.

6-2 Keying Circuits

Plate-circuit keying — Any stage of the transmitter can be keyed by opening and closing the plate power circuit. Two methods are shown in Fig. 602. In A the key is in series with the negative lead from the plate power supply to the keyed stage. It could also be

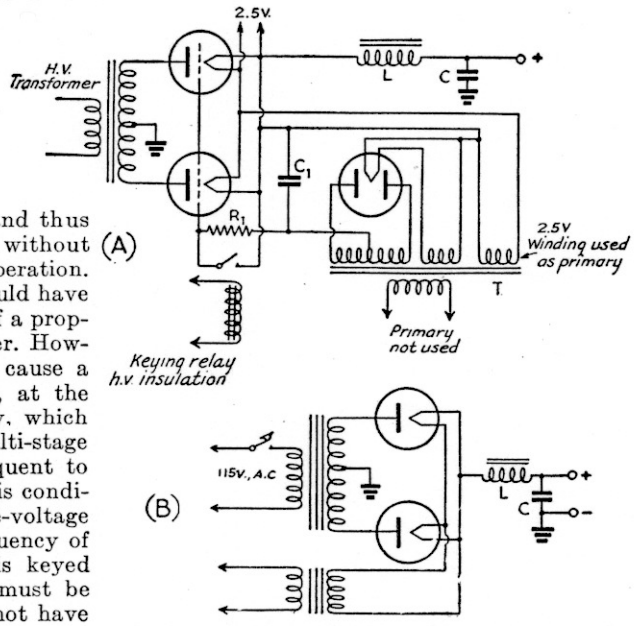

Fig. 603 — Power-supply keying. Grid-control rectifiers are used in A. Transformer *T* is a small multiple-secondary unit of the type used in receiver power supplies, and is used in conjunction with the full-wave rectifier tube to develop bias voltage for the grids of the high-voltage rectifiers. R_1 limits the load on the bias supply when the keying relay is closed; 50,000 ohms is a suitable value. C_1 may be 0.1 μfd. or larger. *L* and *C* constitute the smoothing filter for the high-voltage supply in both circuits. B shows direct keying of the transformer primary.

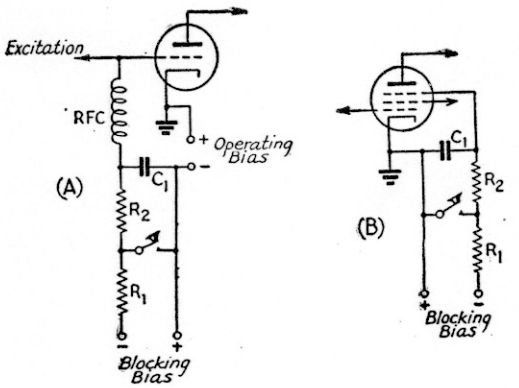

Fig. 604 — Blocked-grid keying. R_1, the current-limiting resistor, should have a value of about 50,000 ohms. C_1 may have a capacity of 0.1 to 1 μfd., depending upon the keying characteristic desired. R_2 also depends on the performance characteristic desired, values being of the order of 5000 to 10,000 ohms in most cases.

placed in the positive lead, although this is to be avoided whenever possible because the key is necessarily at the plate voltage above ground, and there is danger of shock unless a keying relay is used.

Fig. 602-B shows the key in the screen-supply lead of an electron-coupled oscillator. This can be considered to be a variation of plate keying.

Both the plate and screen-grid keying circuits, A and B of Fig. 602, respond well to the use of key-click filters, and are particularly suitable for use with crystal and self-controlled oscillators which are operated at low plate voltage and power input.

Power-supply keying — A variation of plate keying, in which the keying is introduced in the power-supply system itself, rather than in the connections between the power supply and transmitter, is illustrated by the diagrams in Fig. 603.

Fig. 603-A shows the use of grid-controlled rectifier tubes (§ 3-5) in the power supply. Keying is accomplished by applying suitable bias to the grids to cut off plate current flow when the key is open, and by removing the bias when the key is closed. Since in practice this circuit is used only with high-powered high-voltage supplies, a well-insulated keying relay is a necessity.

Direct keying of the primary of the plate power transformer for the keyed stage or stages is shown in Fig. 603-B. This and the method at A inherently have a keying lag because of the time constant (§ 2-6) of the smoothing filter. If enough filter is provided to reduce ripple to a low percentage (§ 8-4) the lag (§ 6-1) is too great to permit crisp keying at speeds above about 25 words per minute, although this type of keying is very effective in eliminating key clicks. A single-section plate-supply filter (§ 8-6) is about the most elaborate type that can be used if a reasonably good keying characteristic is to be achieved.

Blocked-grid keying — Keying may be accomplished by applying sufficient negative bias voltage to a control or suppressor grid to cut off plate current flow when the key is open, and by removing this *blocking* bias when the key is closed. The blocking bias voltage must be sufficient to overcome the r.f. grid voltage, in the case where the bias is applied to the control grid, and hence must be considerably higher than the nominal cut-off value for the tube at the operating d.c. plate voltage. The fundamental circuits are shown in Fig. 604.

In both circuits the key is connected in series with a resistor, R_1, which limits the current drain on the blocking-bias source when the key is closed. R_2C_1 is a resistance-capacity filter (§ 2-11) for controlling the lag on make and break of the key circuit. The lag increases as the time constant (§ 2-6) of this circuit is made larger. Since grid current flows through R_2 when the key is closed in Fig. 604-A, additional operating bias is developed, hence somewhat less bias is needed from the regular bias supply. The operating and blocking biases can be obtained from the same supply, if desired, by utilizing suitable taps on a voltage divider (§ 8-10). For circuits in which no fixed bias is used R_2, can be the regular grid leak (§ 3-6) for the stage.

With blocked-grid keying a relatively small direct current is broken as compared to other systems. Thus any sparking at the key is reduced. The keying characteristic (lag) readily can be controlled by a suitable choice of values for C_1 and R_2.

Cathode keying — Opening the d.c. circuits of both plate and grid simultaneously is called *cathode keying*. It is usually called *center-tap* keying with a directly heated filament-type tube, since in this case the key is placed in the filament-transformer center-tap lead. Typical circuits for this type of keying are shown in Fig. 605.

Cathode keying results in less sparking at the key contacts, for the same plate power, as compared with keying in the plate-supply lead. When used with an oscillator it does not respond as readily to key-click filtering (§ 6-3) as does plate keying, but there is little difference in this respect between the two systems when an amplifier is keyed.

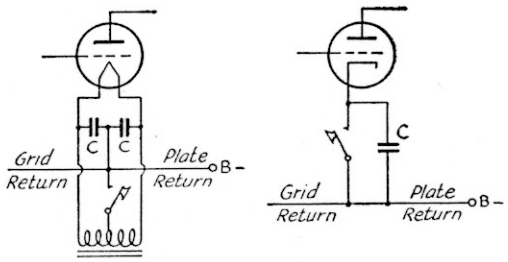

Fig. 605 — Center-tap and cathode keying. The condensers, C, are r.f. by-pass condensers. Their capacity is not critical, values of 0.001 to 0.01 μfd. ordinarily being used.

¶ 6-3 Key-Click Reduction

R.f. filters — A spark at the key contacts, even though minute, will cause a damped oscillation to be set up in the keying circuit which may modulate the transmitter output or may simply be radiated by the wiring in the keying circuit. Interference from the latter source is usually confined to the immediate vicinity of the transmitter, and is similar in nature and effects to the click which is frequently heard in a receiver when an electric light is turned on or off. It can be minimized by isolating the key from the wiring by means of a low-pass filter (§ 2-11), which usually consists of an r.f. choke in each key lead, placed as close as possible to the key, and by-passed on the keying-line side by a condenser, as shown in Fig. 606. Suitable values must be determined by experiment. Choke values may range from 2.5 to 80 millihenrys, and condenser capacities from 0.001 to 0.1 μfd.

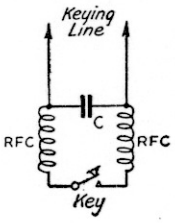

Fig. 606 — R.f. filter used for eliminating the effects of sparking at key contacts. Suitable values for best results with individual transmitters must be determined by experiment. Values for *RFC* range from 2.5 to 80 millihenries and for *C* from 0.001 to 0.1 μfd.

This type of r.f. filter is required in nearly every keying installation, in addition to the lag circuits which are discussed in the next paragraph.

Lag circuits — A filter used to give a desired shape to the keying character, to eliminate unnecessary sidebands and consequent interference, is called a *lag circuit*. In one form, suitable for the circuits of Figs. 602 and 605, it consists of a condenser across the key terminals and an inductance in series with one of the leads. This is shown in Fig. 607. The optimum values of capacity and inductance must be found by experiment, but are not especially critical. If a high-voltage low-current circuit is being keyed a small condenser and large inductance will be necessary, while if a low-voltage high-current circuit is keyed the capacity required will be high and the inductance small. For example, a 300-volt 6-ma. circuit will require about 30 henrys and 0.05 μfd., while a 300-volt 50-ma. circuit needs about 1 henry and 0.5 μfd. For any given circuit and fixed values of current and voltage, increasing the inductance will reduce the clicks on "make" and increasing the capacity will reduce the clicks on "break."

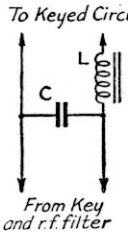

Fig. 607 — Lag circuit used for shaping the keying character to eliminate unnecessary sidebands. Actual values for any given circuit must be determined by experiment, and may range from 1 to 30 henries for *L* and from 0.05 to 0.5 μfd. for *C*, depending on the plate current.

Blocked-grid keying is adjusted by changing the values of resistors and condensers in the circuit. In Fig. 604, the click on "make" is reduced by increasing the capacity of C_1, and the click on break is reduced by increasing C_1 and/or R_2. The values required for individual installations will vary with the amount of blocking voltage and the grid current. The constants given in Fig. 604 will serve as a first approximation.

Tube keying — A tube keyer is a convenient adjunct to the transmitter, because it allows the keying characteristic to be adjusted easily without necessitating condenser and inductance values which may not be readily available. It uses the plate resistance of a tube (or tubes in parallel) to replace the key in a plate or cathode circuit, the keyer tube (or tubes) being keyed by the blocked-grid method (§ 6-2). A typical circuit is shown in Fig. 608. Type 45 tubes are suitable because of their low plate resistance and consequent small voltage drop between plate and cathode. When a tube keyer is used to replace the key in a plate or cathode circuit, the power output of the stage will be somewhat reduced because of the voltage drop across the keyer tube, but this can be compensated for by a slight increase in the supply voltage. The use of a tube keyer makes the key itself entirely safe to handle, since the high resistance in series with the key and blocking voltage prevents possible danger of shock through contact with high-voltage circuits.

¶ 6-4 Checking Transmitter Keying

Clicks — Transmitter keying can be checked by listening to the signal on a superheterodyne receiver. The antenna should be disconnected, so that the receiver does not overload, and, if necessary, the r.f. gain may be reduced as well. Listening with the beat oscillator and a.v.c. off, the keying should be adjusted so that a slight click is heard as the key is closed but practically none can be heard when the key is released. When the keying constants have been adjusted to meet this condition, the clicks will be about optimum for all normal amateur work. If the clicks are too pronounced, they will cause interference with other amateur transmissions, and possibly to nearby broadcast receivers.

Chirps — Keying chirps (instability) may be checked by tuning in the signal or one of its harmonics on the highest-frequency range of the receiver and listening with the b.f.o. on and the a.v.c. off. The gain should be sufficient to give moderate signal strength, but it should be low enough to preclude the possibility of overloading. Adjust the tuning to give a low-frequency beat note and key the transmitter. Any chirp introduced by the keying adjustment will be readily apparent.

Listening to a harmonic will magnify the effect of any instability by the order of the harmonic, and thus make more perceptible.

Oscillator keying — The keying of an amplifier is relatively straightforward and requires no special treatment, but a few additional precautions will be found necessary with oscillator keying. Any oscillator, either self-excited or crystal, will key well if it will oscillate at low plate voltages (of the order of one or two volts) and if its change in frequency with plate-voltage change is negligible. A crystal oscillator will oscillate at low plate voltages if a regenerative type of circuit such as the Tritet or grid-plate (§ 4-5) is used and if an r.f. choke is connected in series with the grid leak, to reduce loading on the crystal. Crystal oscillators of this type generally are free from chirp unless there is a relatively large air-gap between the crystal and top plate of the crystal holder, as is the case with a variable-frequency crystal set at the high-frequency end of its range.

Self-controlled oscillators can be made to meet the same requirements by using a high C/L ratio in the tank circuit, low plate and screen currents, and judicious feed-back adjustment (§ 3-7). A self-controlled oscillator intended to be keyed should be designed for good keying rather than maximum output.

Stages following keying — When a keying filter is being adjusted, the stages following the keyed tube should be made inoperative by removing the plate voltage. This facilitates monitoring the keying without the introduction of additional effects. The following stages should then be added, one at a time, checking the keying after each addition. An increase in click intensity (for the same carrier strength) indicates that the clicks are being added in the stages following the one being keyed. The fixed bias on such stages should be sufficient to reduce the idling plate current (no excitation) to a low value, but not to zero. Under these conditions, any instability or tendency toward parasitic oscillations, either of which can adversely affect the keying characteristic, usually will evidence itself.

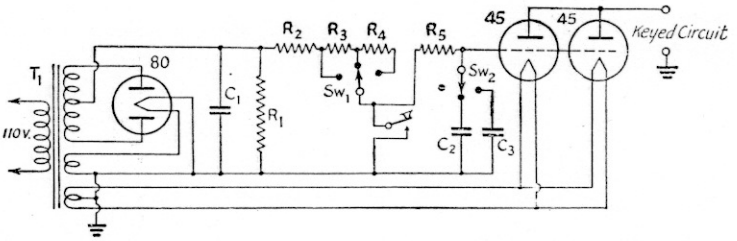

Fig. 608 — Vacuum-tube keyer circuit. The voltage drop across the tubes will be approximately 90 volts with the two Type 45 tubes shown, when the keyed current is 100 milliamperes. More tubes can be connected in parallel to reduce the drop. Suggested values are as follows:

C_1 — 2-μfd. 600-volt paper.
C_2 — 0.003-μfd. mica.
C_3 — 0.005-μfd. mica.
R_1 — 0.25 megohm, 2-watt.
R_2 — 50,000 ohms, 10-watt.
R_3, R_4 — 5 megohms, ½-watt.
R_5 — 0.5 megohm, ½-watt.
Sw_1, Sw_2 — 1-circuit 3-position rotary switch.
T_1 — Power transformer, 325 volts each side of center-tap, with 5-volt and 2.5-volt filament windings.

A wider range of lag adjustment can be obtained by using additional resistors and condensers. Suggested values of capacity, in addition to C_2 and C_3, are 0.001 and 0.002 μfd. Resistors in addition to R_2 could be 2, 2, 3 and 5 megohms. More switch positions will be required.

Monitoring of keying — Most operators find a keying monitor helpful in developing and maintaining a good "fist," especially if a "bug" or semi-automatic key is used. While several types have been devised, the most popular consists of an audio oscillator the output of which is coupled to the receiver loud speaker or headphones, and which is keyed simultaneously with the transmitter. Fig. 609 shows the circuit diagram of a simple keying-monitor oscillator. The plate voltage, as well as the heater voltage, is supplied by a 6.3-volt filament transformer. One section of the 6F8G dual triode is used as the rectifier to supply d.c. for the plate of the second section, which is used as the oscillator. A change in the value of R_1 will alter the output tone. The output terminal labeled *Gnd* should be connected directly to the receiver chassis, while P_1 should be connected to the "hot" side of the headphones. Shunting of the 'phones by the oscillator may cause some loss of volume on received signals, unless the coupling capacity, C_3, is made sufficiently small. At the same time, however, the capacity should be made large enough to provide good transfer of the oscillator signal.

If the transmitter oscillator is keyed for break-in, the keying terminals of the oscillator may be connected in parallel with those of the transmitter. With cathode keying, terminals 1 and 2 will be connected across the key, with terminal 2 going to the ground side of the key. With blocked-grid keying, terminals 2 and 3 go to the key and a resistance of 0.1 megohm or so is inserted in series with terminal 3.

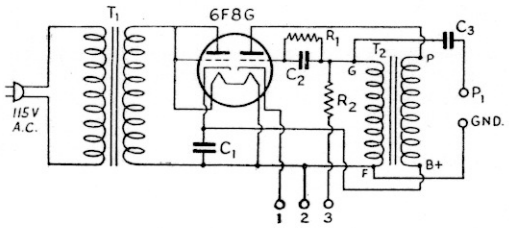

Fig. 609 — Circuit diagram of a keying monitor of the audio-oscillator type, with self-contained power supply.

C_1 — 25-μfd. 25-volt electrolytic.
C_2 — 250-μμfd. mica.
C_3 — Approximately 0.01 μfd. (see text).
R_1 — 0.15 megohm, ½-watt.
R_2 — Approximately 0.1 megohm, 1-watt (see text).
T_1 — 6.3-volt 1-ampere filament transformer.
T_2 — Small audio transformer, interstage type.

CHAPTER SEVEN

Receiver Principles and Design

7-1 Elements of Receiving Systems

Basic requirements — The purpose of a radio receiving system is to abstract energy from passing radio waves and convert it into a form which conveys the intelligence contained in the transmitted signal. The receiver also must be able to select a desired signal and eliminate those not wanted. The fundamental processes involved are those of amplification and detection.

Detection — The high frequencies used for radio signaling are well beyond the audio-frequency range (§ 2-7), and therefore cannot be used to actuate a loudspeaker directly. Neither can they be used to operate other devices, such as relays, by means of which a message might be transmitted. The process of converting a modulated radio-frequency wave to a usable low frequency, called *detection* or *demodulation*, is essentially that of rectification (§ 3-1). The modulated carrier (§ 5-1) is thereby converted to a unidirectional current, the amplitude of which will vary at the same rate as the modulation. These low-frequency variations are readily amplified, and can be applied to the headphones, loudspeaker or other form of electromechanical device.

Code signals — The dots and dashes of code (c.w.) transmissions are rectified as described, but in themselves can produce no audible tone in the headphones or loudspeaker because they are of constant amplitude. For aural reception it is necessary to introduce a second radio frequency, differing from the signal frequency by a suitable audio frequency, into the detector circuit to produce an audible beat (§ 2-13). The frequency difference, and hence the *beat note*, is generally of the order of 500 to 1000 cycles, since these tones are within the range of optimum response of both the ear and the headset. If the source of the second radio frequency is a separate oscillator, the system is known as *heterodyne* reception; if the detector itself is made to oscillate and produce the second frequency, it is known as an *autodyne* detector.

Amplification — To build up weak signals to usable output level, modern receivers employ considerable amplification — often of the order of hundreds of thousands of times. Amplifiers are used at the frequency of the incoming signal (*r.f. amplifiers*), after detection (*a.f. amplifiers*), and, in superheterodyne receivers, at one or more intermediate radio frequencies (*i.f. amplifiers*). R.f. and i.f. amplifiers practically always employ tuned circuits.

Types of receivers — Receivers may vary in complexity from a simple detector with no amplification to multi-tube arrangements having amplification at several different radio frequencies as well as at audio frequency. A regenerative detector (§ 7-4) with or without audio-frequency amplification (§ 7-5) is known as a *regenerative receiver;* if the detector is preceded by one or more tuned r.f. amplifier stages (§ 7-6), the combination is known as a *t.r.f. (tuned radio frequency) receiver*. The *superheterodyne receiver* (§ 7-8) employs r.f. amplification at a fixed intermediate frequency as well as at the frequency of the signal itself, the latter being converted by the heterodyne process to the intermediate frequency.

At very-high frequencies the superregenerative detector (§ 7-4), usually with audio amplification, is used in the *superregenerative receiver* or *superregenerator*, providing large amplification of weak signals with simple circuit arrangements.

7-2 Receiver Characteristics

Sensitivity — Sensitivity is defined as the strength of the signal (usually expressed in microvolts) which must be applied to the input terminals of the receiver to produce a specified audio-frequency power output at the loudspeaker or headphones (§ 7-5). It is a measure of the amplification or gain of the receiver.

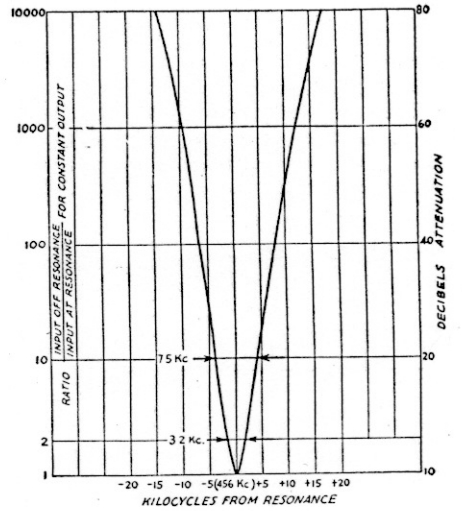

Fig. 701 — Selectivity curve of a modern superheterodyne receiver. Relative response is plotted against deviations above and below the resonance frequency. The scale at the left is in terms of voltage ratios; the corresponding decibel steps are shown at the right.

Signal-to-noise ratio — Every receiver generates some noise of a hiss-like character, and signals weaker than the noise cannot be separated from it no matter how much amplification is used. This relation between noise and a weak signal is expressed by the term *signal-to-noise* ratio. It can be defined in various ways, one simple way being to give it as the ratio of signal power output to noise output from the receiver at a specified value of modulated carrier voltage applied to the input terminals.

The hiss-like noise mentioned above is inherent in the circuits and tubes of the receiver, and its amplitude depends upon the selectivity of the receiver. The greater the selectivity the smaller the noise, other things being equal (§ 7-6). In addition to inherent receiver noise, atmospheric electricity (natural "static") and electrical devices in the vicinity of the receiver also cause noise which adversely affects the signal-to-noise ratio.

Selectivity — Selectivity is the ability of a receiver to discriminate against signals of frequencies differing from that of the desired signal. The over-all selectivity will depend upon the selectivity of the individual tuned circuits and the number of such circuits.

The selectivity of a receiver is shown graphically by drawing a curve which gives the ratio of signal strength required at various frequencies off resonance to the signal strength at resonance, to give constant output. A *resonance curve* of this type (taken on a typical communications-type superheterodyne receiver) is shown in Fig. 701. The *band-width* is the width of the resonance curve (in cycles or kilocycles) of a receiver at a specified ratio; in Fig. 701, the band-widths are indicated for ratios of response of 2 and 10 ("2 times down" and "10 times down").

Selectivity for signals within a few kilocycles of the desired-signal frequency is called *adjacent-channel* selectivity, to distinguish it from the discrimination against signals considerably removed from the desired frequency.

Stability — The stability of a receiver is its ability to give constant output, over a period of time, from a signal of constant strength and frequency. Primarily, it means the ability to stay tuned to a given signal. However, a receiver which at some settings of its controls has a tendency to break into oscillation, or "howl," also is said to be unstable.

The stability of a receiver is affected principally by temperature variations, supply-voltage changes, and constructional features of a mechanical nature.

Fidelity — Fidelity is the relative ability of the receiver to reproduce in its output the modulation (keying, 'phone, etc.) carried by the incoming signal. For exact reproduction the band-width must be great enough to accommodate the highest modulation frequency transmitted, and the relative amplitudes of the various frequency components within the band must not be changed in the output.

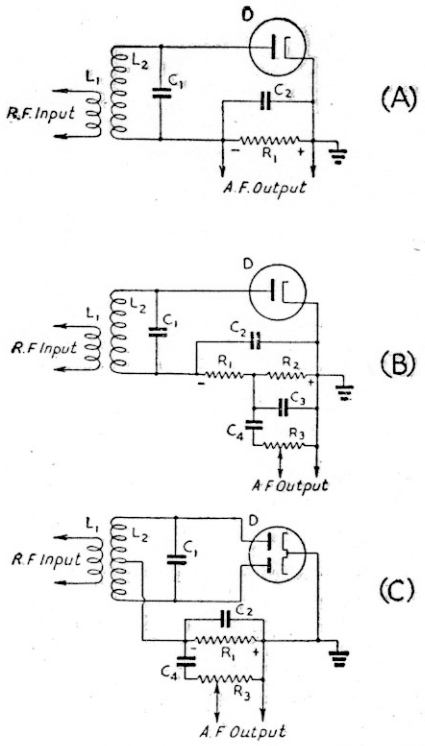

Fig. 702 — Simplified and practical diode detector circuits. A, the elementary half-wave diode detector; B, a practical circuit, with r.f. filtering and audio output coupling; C, full-wave diode detector, with output coupling indicated. The circuit, L_2C_1, is tuned to the signal frequency; typical values for C_2 and R_1 in A and B are 250 $\mu\mu$fd. and 250,000 ohms, respectively; in B, C_2 and C_3 are 100 $\mu\mu$fd. each; R_1, 50,000 ohms; and R_2, 250,000 ohms. C_4 is 0.1 μfd. and R_3 may be 0.5 to 1 megohm.

¶ 7-3 Detectors

Characteristics — The important characteristics of a detector are its sensitivity, fidelity or linearity, resistance or impedance, and signal-handling capability.

Detector *sensitivity* is the ratio of audio-frequency output to radio-frequency input. *Linearity* is a measure of the ability of the detector to reproduce, as an audio frequency, the exact form of the modulation on the incoming signal. The *resistance* or *impedance* of the detector is important in circuit design, since a relatively low resistance means that power is consumed in the detector. The *signal-handling capability* means the ability of the detector to accept signals of a specified amplitude without overloading.

Diode detectors — The simplest detector is the diode rectifier. Circuits for both half-wave and full-wave (§ 8-3) diodes are given in Fig. 702. The simplified half-wave circuit at 702-A includes the r.f. tuned circuit, L_2C_1, a coupling coil, L_1, from which the r.f. energy is fed to L_2C_1, and the diode, D, with its load resistance, R_1, and by-pass condenser, C_2. The flow of rectified r.f. current through R_1 causes a d.c. voltage to develop across its terminals, and this voltage varies with the modulation on the

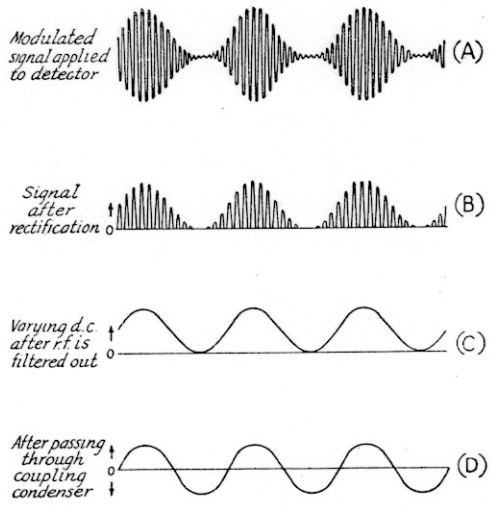

Fig. 703 — Diagrams showing the detection process.

signal. The − and + signs show the polarity of the voltage. The variation in amplitude of the r.f. signal with modulation causes corresponding variations in the value of the d.c. voltage across R_1. The load resistor, R_1, usually has a rather high value of resistance, so that a fairly large voltage will develop from a small rectified-current flow.

The progress of the signal through the detector or rectifier is shown in Fig. 703. A typical modulated signal as it exists in the tuned circuit is shown at A. When applied to the rectifier tube, current flows from plate to cathode only during the part of the r.f. cycle when the plate is positive with respect to the cathode, so that the output of the rectifier consists of half-cycles of r.f. still modulated as in the original signal. These current "pulses" flow in the load circuit comprised of R_1 and C_2, the resistance of R_1 and the capacity of C_2 being so proportioned that C_2 charges to the peak value of the rectified voltage on each pulse and retains enough charge between pulses so that the voltage across R_1 is smoothed out, as shown in C. C_2 thus acts as a filter for the radio-frequency component of the output of the rectifier, leaving a d.c. component which varies in the same way as the modulation on the original signal. When this varying d.c. voltage is applied to a following amplifier through a coupling condenser (C_4 in Fig. 702-B), only the *variations* in voltage are transferred, so that the final output signal is a.c., as shown in D.

In the circuit at 702-B, R_1 and C_2 have been divided for the purpose of providing a more effective filter for r.f. It is important to prevent the appearance of any r.f. voltage in the output of the detector, because it may cause overloading of a succeeding amplifier tube. The audio-frequency variations can be transferred to another circuit through a coupling condenser, C_4 in Fig. 702, to a load resistor, R_3, which usually is a "potentiometer" (§ 8-10) so that the volume can be adjusted to a desired level.

The full-wave diode circuit at 702-C is practically identical in operation to the half-wave circuit, except that both halves of the r.f. cycle are utilized. The full-wave circuit has the advantage that very little r.f. voltage appears across the load resistor, R_1, because the midpoint of L_2 is at the same potential as the cathode, or "ground" for r.f.

The reactance of C_2 must be small compared to the resistance of R_1 at the radio frequency being rectified, but at audio frequencies must be relatively large compared to R_1 (§ 2-8, 2-13). This condition is satisfied by the values shown. If the capacity of C_2 is too large, response at the higher audio frequencies will be lowered.

Compared with other detectors, the sensitivity of the diode is low. Since the diode consumes power, the Q of the tuned circuit is reduced, bringing about a reduction in selectivity (§ 2-10). The linearity is good, however, and the signal-handling capability is high.

Grid-leak detectors — The grid-leak detector is a combination diode rectifier and audio-frequency amplifier. In the circuit of Fig. 704-A, the grid corresponds to the diode

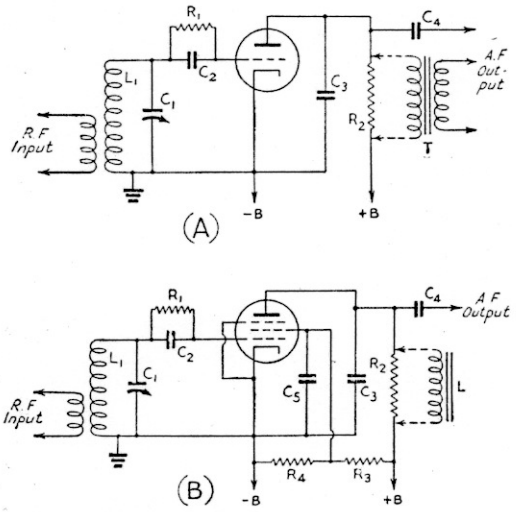

Fig. 704 — Grid-leak detector circuits, A, triode; B, pentode. A tetrode may be used in the circuit of B by neglecting the suppressor-grid connection. Transformer coupling may be substituted for resistance coupling in A, or a high-inductance choke may replace the plate resistor in B. L_1C_1 is a circuit tuned to the signal frequency. The grid leak, R_1, may be connected directly from grid to cathode instead of across the grid condenser as shown. The operation with either connection will be the same. Representative values for components are:

Component	*Circuit A*	*Circuit B*
C_2	100 to 250 $\mu\mu$fd.	100 to 250 $\mu\mu$fd.
C_3	0.001 to 0.002 μfd.	250 to 500 $\mu\mu$fd.
C_4	0.1 μfd.	0.1 μfd.
C_5		0.5 μfd. or larger.
R_1	1 to 2 megohms.	1 to 5 megohms.
R_2	50,000 ohms.	100,000 to 250,000 ohms.
R_3		50,000 ohms.
R_4		20,000 ohms.
T	Audio transformer.	
L		500-henry choke.

The plate voltage in A should be about 50 volts for best sensitivity. In B, the screen voltage should be about 30 volts and the plate voltage from 100 to 250.

plate and the rectifying action is exactly the same as just described. The d.c. voltage from rectified-current flow through the grid leak, R_1, biases the grid negatively with respect to cathode, and the audio-frequency variations in voltage across R_1 are amplified through the tube just as in a normal a.f. amplifier. In the plate circuit, R_2 is the plate load resistance (§ 3-3) and C_3 is a by-pass condenser to eliminate r.f. in the output circuit. C_4 is the output coupling condenser. With a triode, the load resistor, R_2, may be replaced by an audio transformer, T, in which case C_4 is not used.

Since audio amplification is added to rectification, the grid-leak detector has considerably greater sensitivity than the diode. The sensitivity can be further increased by using a screen-grid tube instead of a triode, as at 704-B. The operation is equivalent to that of the triode circuit. The screen by-pass condenser, C_5, should have low reactance (§ 2-8, 2-13) for both radio and audio frequencies. R_3 and R_4 constitute a voltage divider (§ 8-10) from the plate supply to furnish the proper d.c. voltage to the screen. In both circuits, C_2 must have low r.f. reactance and high a.f. reactance compared to the resistance of R_1; the same applies to C_3 with respect to R_2.

Because of the high plate resistance of the screen-grid tube (§ 3-5), transformer coupling from the plate circuit of a screen-grid detector is not satisfactory. An impedance (L in Fig. 704-B) can be used in place of a resistor, with a gain in sensitivity because a high value of load impedance can be developed with little loss of plate voltage as compared to the voltage drop through a resistor. The coupling coil, L_2, for a screen-grid detector should have an inductance of the order of 300 to 500 henrys.

The sensitivity of the grid-leak detector is higher than that of any other type. Like the diode, it "loads" the tuned circuit and reduces its selectivity. The linearity is rather poor, and the signal-handling capability is limited.

Plate detectors — The plate detector is arranged so that rectification of the r.f. signal takes place in the plate circuit of the tube, as contrasted to the grid rectification just described. Sufficient negative bias is applied to the grid to bring the plate current nearly to the cut-off point, so that the application of a signal to the grid circuit causes an increase in average plate current. The average plate current follows the changes in signal amplitude in a fashion similar to the rectified current in a diode detector.

Circuits for triodes and pentodes are given in Fig. 705. C_3 is the plate by-pass condenser, R_1 is the cathode resistor which provides the operating grid bias (§ 3-6), and C_2 is a by-pass for both radio and audio frequencies across R_1 (§ 2-13). R_2 is the plate load resistance (§ 3-3), across which a voltage appears as a result of the rectifying action described above. C_4 is the output coupling condenser. In the pentode circuit at B, R_3 and R_4 form a voltage divider

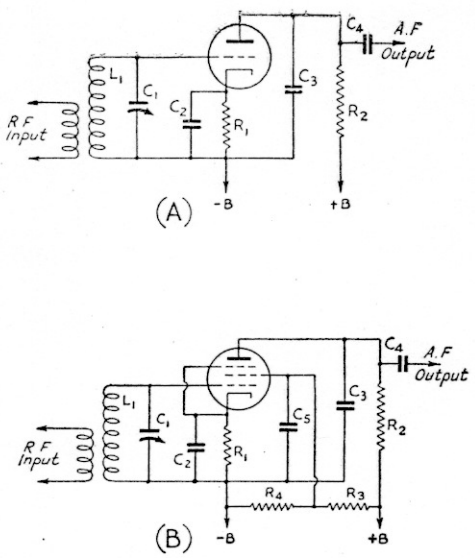

Fig. 705 — **Circuits for plate detection. A, triode; B, pentode. The input circuit, L_1C_1, is tuned to the signal frequency. Typical values for the other constants are:**

Component	*Circuit A*	*Circuit B*
C_2	0.5 μfd. or larger.	0.5 μfd. or larger.
C_3	0.001 to 0.002 μfd.	250 to 500 μμfd.
C_4	0.1 μfd.	0.1 μfd.
C_5		0.5 μfd. or larger.
R_1	25,000 to 150,000 ohms.	10,000 to 20,000 ohms.
R_2	50,000 to 100,000 ohms.	100,000 to 250,000 ohms.
R_3		50,000 ohms.
R_4		20,000 ohms.

Plate voltages from 100 to 250 volts may be used. Effective screen voltage in B should be about 30 volts.

to supply the proper potential (about 30 volts) to the screen, and C_5 is a by-pass condenser between screen and cathode. C_5 must have low reactance for both radio and audio frequencies.

In general, transformer coupling from the plate circuit of a plate detector is not satisfactory, because the plate impedance even of a triode is very high when the bias is set near the plate-current cut-off point (§ 3-2, 3-3). Impedance coupling may be used in place of the resistance coupling shown in Fig. 705. The same order of inductance is required as with the screen-grid detector described previously.

The plate detector is more sensitive than the diode since there is some amplifying action in the tube, but less so than the grid-leak detector. It will handle considerably larger signals than the grid-leak detector, but is not quite so tolerant in this respect as the diode. Linearity, with the self-biased circuits shown, is good. Up to the overload point the detector takes no power from the tuned circuit, and so does not affect its Q and selectivity (§ 2-10).

Infinite-impedance detector — The circuit of Fig. 706 combines the high signal-handling capabilities of the diode detector with low distortion (good linearity), and, like the plate detector, does not load the tuned circuit to which it is connected. The circuit resembles that of the plate detector, except that the load

resistance, R_1, is connected between cathode and ground and thus is common to both grid and plate circuits, giving negative feed-back for the audio frequencies. The cathode resistor is by-passed for r.f. (C_1) but not for audio (§ 2-13), while the plate circuit is by-passed

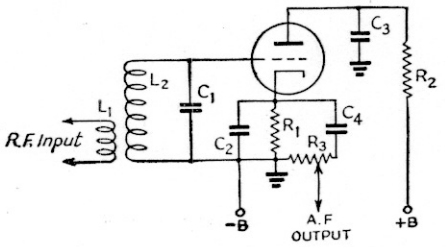

Fig. 706 — The infinite-impedance or linear detector. The input circuit, L_2C_1, is tuned to the signal frequency. Typical values for the other constants are:

C_2 — 250 $\mu\mu$fd. R_1 — 0.15 megohm.
C_3 — 0.5 μfd. R_2 — 25,000 ohms.
C_4 — 0.1 μfd. R_3 — 0.25-megohm volume control.

A tube having a medium amplification factor (about 20) should be used. Plate voltage should be 250 volts.

to ground for both audio and radio frequencies. R_2 forms, with C_2, an RC filter (§ 2-11) to isolate the plate from the "B" supply at a.f.

The plate current is very low at no signal, increasing with signal as in the case of the plate detector. The voltage drop across R_1 similarly increases with signal, because of the increased plate current. Because of this and the fact that the initial drop across R_1 is large, the grid cannot be driven positive with respect to the cathode by the signal, hence no grid current can be drawn.

7-4 Regenerative Detectors

Circuits — By providing controllable r.f. feed-back or regeneration (§ 3-3) in a triode or pentode detector circuit, the incoming signal can be amplified many times, thereby greatly increasing the sensitivity of the detector. Regeneration also increases the effective Q of the circuit, and hence increases the selectivity (§ 2-10) by virtue of the fact that the maximum regenerative amplification takes place only at the frequency to which the circuit is tuned. The grid-leak type of detector is most suitable for the purpose. Except for the regenerative connection, the circuit values are identical with those previously described for this type of detector, and the same considerations apply. The amount of regeneration must be controllable, because maximum regenerative amplification is secured at the critical point where the circuit is just about to oscillate (§ 3-7) and the critical point in turn depends upon circuit conditions, which may vary with the frequency to which the detector is tuned.

Fig. 707 shows the circuits of regenerative detectors of various types. The circuit of A is for a triode tube, with a variable by-pass condenser, C_3, in the plate circuit to control regeneration. When the capacity is small the tube does not regenerate, but as it increases toward maximum its reactance (§ 2-8) becomes smaller until a critical value is reached where there is sufficient feed-back to cause oscillation. If L_2 and L_3 are wound end-to-end in the same direction, the plate connection is to the outside of the plate or "tickler" coil, L_3, when the grid connection is to the outside of L_2.

The circuit of B is for a screen-grid tube, regeneration being controlled by adjustment of the screen-grid voltage. The tickler, L_3, is in the plate circuit. The portion of the control resistor between the rotating contact and ground is by-passed by a large condenser (0.5 μfd. or more) to filter out scratching noise when the arm is rotated (§ 2-11). The feed-back is adjusted by varying the number of turns on L_3 or the coupling (§ 2-11) between L_2 and L_3, until the tube just goes into oscillation at a screen voltage of approximately 30 volts.

Circuit C is identical with B in principle of operation, except that the oscillating circuit is of the Hartley type (§ 3-7). Since the screen and plate are in parallel for r.f. in this circuit, only a small amount of "tickler" — that is, relatively few turns between the cathode tap and ground — is required for oscillation.

Adjustment for smooth regeneration — The ideal regeneration control would permit the detector to go into and out of oscillation smoothly, would have no effect on the frequency of oscillation, and would give the same value of regeneration regardless of frequency and the loading on the circuit. In practice, the effects of loading, particularly the loading that occurs when the detector circuit is coupled to an antenna, are difficult to overcome. Likewise, the regeneration is affected by the frequency to which the grid circuit is tuned.

In all circuits it is best to wind the tickler at the ground or cathode end of the grid coil, and to use as few turns on the tickler as will allow the detector to oscillate easily over the whole tuning range at the plate (and screen, if a pentode) voltage which gives maximum sensitivity. Should the tube break into oscillation suddenly as the regeneration control is advanced, making a click, the operation often can be made smoother by changing the grid-leak resistance to a higher or lower value. The wrong grid leak plus too-high plate and screen voltage are the most frequent causes of lack of smoothness in going into oscillation.

Antenna coupling — If the detector is coupled to an antenna, slight changes in the antenna constants (as when the wire swings in a breeze) affect the frequency of the oscillations generated, and thereby the beat frequency when c.w. signals are being received. The tighter the antenna coupling is made, the greater will be the feed-back required or the higher will be the voltage necessary to make the detector oscillate. The antenna coupling should be the maximum that will allow the detector to go into oscillation smoothly with the correct voltages on the tube. If capacity

coupling (§ 2-11) to the grid end of the coil is used, only a very small amount of capacity will be needed to couple to the antenna. Increasing the capacity increases the coupling.

At frequencies where the antenna system is resonant the absorption of energy from the oscillating detector circuit will be greater, with the consequence that more regeneration is needed. In extreme cases it may not be possible to make the detector oscillate with normal voltages, causing so-called "dead spots." The remedy for this is to loosen the antenna coupling to the point which permits normal oscillation and smooth regeneration control.

Body capacity — A regenerative detector occasionally shows a tendency to change frequency slightly as the hand is moved near the dial. This condition (*body capacity*) can be caused by poor design of the receiver, or by the antenna if the detector is coupled directly to it. If body capacity is present when the antenna is disconnected, it can be eliminated by better shielding, and sometimes by r.f. filtering of the 'phone leads. Body capacity which is present only when the antenna is connected is caused by resonance effects in the antenna, which tend to cause part of a standing wave (§ 2-12) of r.f. voltage to appear on the ground lead and thus raise the whole detector circuit above ground potential. A good, short ground connection should be made to the receiver and the length of the antenna varied electrically (by adding a small coil or variable condenser in the antenna lead) until the effect is minimized. Loosening the coupling to the antenna circuit also will help.

Hum — Hum at the power-supply frequency may be present in a regenerative detector, especially when it is used in an oscillating condition for c.w. reception, even though the plate supply itself is free from ripple (§ 8-4). The hum may result from the use of a.c. on the tube heater, but effects of this type normally are troublesome only when the circuit of Fig. 707-C is used, and then only at 14 Mc. and higher frequencies. Connecting one side of the heater supply to ground, or grounding the center-tap of the heater transformer winding, is good practice to reduce hum, and the heater wiring should be kept as far as possible from the r.f. circuits.

House wiring, if of the "open" type, will have a rather extensive electrostatic field which may cause hum if the detector tube, grid lead, and grid condenser and leak are not electrostatically shielded. This type of hum is easily recognizable because of its rather high pitch, a result of harmonics (§ 2-7) in the power-supply system. The hum is caused by a species of grid modulation (§ 5-4).

Antenna resonance effects frequently cause a hum of the same nature as that just described which is most intense at the various resonance points, and hence varies with tuning. For this reason it is called tunable hum. It is prone to occur with a rectified a.c. plate supply (§ 8-1) when a standing wave effect of the type described in the preceding paragraph occurs, and is associated with the non-linearity of the rectifier tube in the plate supply.

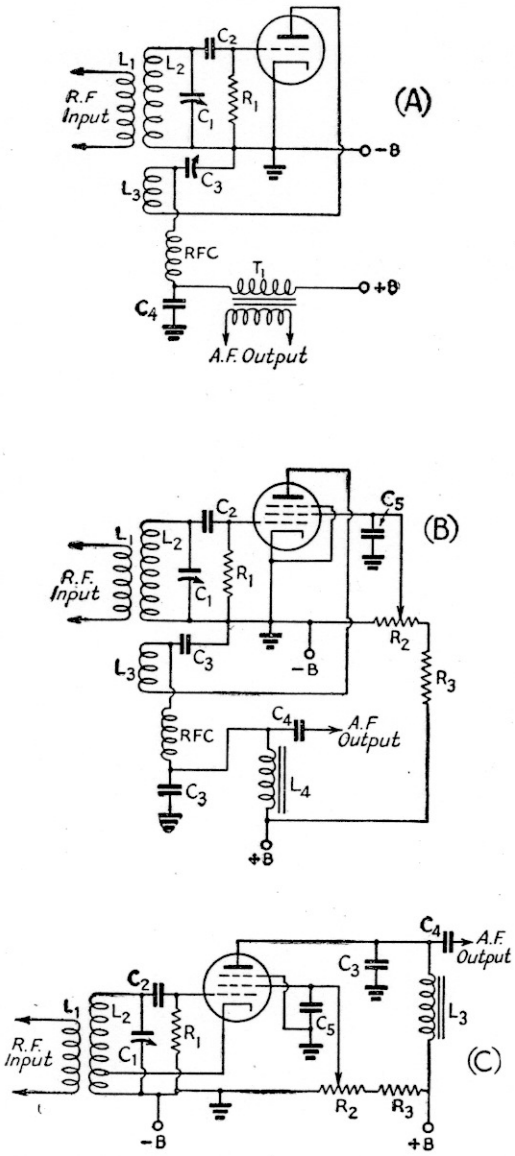

Fig. 707 — **Triode and pentode regenerative detector circuits. The input circuit, L_2C_1, is tuned to the signal frequency. The grid condenser, C_2, should have a value of about 100 $\mu\mu$fd. in all circuits; the grid leak, R_1, may range in value from 1 to 5 megohms. The tickler coil, L_3, ordinarily will have from 10 to 25 per cent of the number of turns on L_2; in C, the cathode tap is about 10 per cent of the number of turns on L_2 above ground. Regeneration control condenser C_3 in A should have a maximum capacity of 100 $\mu\mu$fd. or more; by-pass condensers C_3 in B and C are likewise 100 $\mu\mu$fd. C_5 is ordinarily 1 μfd. or more; R_2, a 50,000-ohm potentiometer; R_3, 50,000 to 100,000 ohms. L_4 in B (L_3 in C) is a 500-henry inductance, C_4 is 0.1 μfd. in both circuits. T_1 in A is a conventional audio transformer for coupling from the plate of a tube to a following grid. *RFC* is 2.5 mh. In A, the plate voltage should be about 50 volts for best sensitivity. Pentode circuits require about 30 volts on the screen; plate voltage may be 100 to 250 volts.**

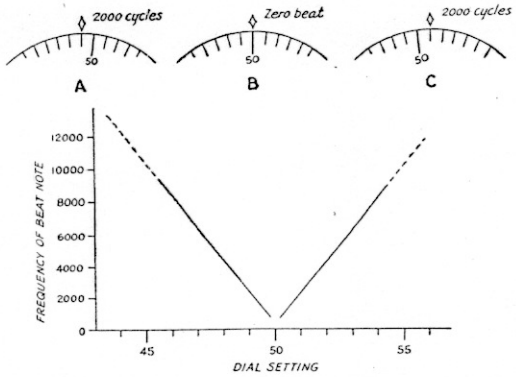

Fig. 708 — As the tuning dial of a receiver is turned past a c.w. signal, the beat note varies from a high tone down through "zero beat" (no audible frequency difference) and back up to a high tone, as shown at A, B and C. The curve is a graphical representation of the action. The beat exists past 8000 or 10,000 cycles but usually is not heard because of the limitations of the audio system.

Elimination of antenna resonance effects as described and by-passing the rectifier plates to cathode (using by-pass condensers of the order of 0.001 μfd.) usually will cure it.

Tuning — For c.w. reception, the regeneration control is advanced until the detector breaks into a "hiss," which indicates that the detector is oscillating. Further advancing the regeneration control after the detector starts oscillating will result in a slight decrease in the strength of the hiss, indicating that the sensitivity is decreasing.

The proper adjustment of the regeneration control for best reception of c.w. signals is where the detector just starts to oscillate, when it will be found that c.w. signals can be tuned in and will give a tone with each signal depending on the setting of the tuning control. As the receiver is tuned through a signal the tone first will be heard as a very high pitch, then will go down through "zero beat" (the region where the frequencies of the incoming signal and the oscillating detector are so nearly alike that the difference or beat is less than the lowest audible tone) and rise again on the other side, finally disappearing at a very high pitch. This behavior is shown in Fig. 708. It will be found that a low-pitched beat-note cannot be obtained from a strong signal because the detector "pulls in" or "blocks"; that is, the signal tends to control the detector in such a way that the latter oscillates at the signal frequency, despite the fact that the circuit may not be tuned exactly to resonance. This phenomenon, commonly observed when an oscillator is coupled to a source of a.c. voltage of approximately the frequency at which the oscillator is operating, is called "locking-in"; the more stable of the two frequencies assumes control over the other. "Blocking" usually can be corrected by advancing the regeneration control until the beat-note occurs again. If the regenerative detector is preceded by an r.f. amplifier stage, the blocking can be eliminated by reducing the gain of the r.f. stage. If the detector is coupled to an antenna, the blocking condition can be eliminated by advancing the regeneration control or loosening the antenna coupling.

The point just after the receiver starts oscillating is the most sensitive condition for c.w. reception. Further advancing the regeneration control makes the receiver less prone to blocking by strong signals, but also less capable of receiving weak signals.

If the receiver is in the oscillating condition and a 'phone signal is tuned in, a steady audible beat-note will result. While it is possible to listen to 'phone if the receiver can be tuned to exact zero beat, it is more satisfactory to reduce the regeneration to the point just before the receiver goes into oscillation. This is also the most sensitive operating point.

Superregeneration — The limit to which ordinary regenerative amplification can be carried is the point at which oscillations commence, since at that point further amplification ceases. The *superregenerative* detector overcomes this limitation by introducing into the detector circuit an alternating voltage of a frequency somewhat above the audible range (of the order of 20 to 100 kilocycles), in such a way as to vary the detector's operating point (§ 3-3). As a consequence of the introduction of this *quench* or *interruption* frequency, the detector can oscillate only when the varying operating point is in a region suitable for the production of oscillations. Because the oscillations are constantly being interrupted, the regeneration can be greatly increased, and the signal will build up to relatively tremendous proportions. The superregenerative circuit is

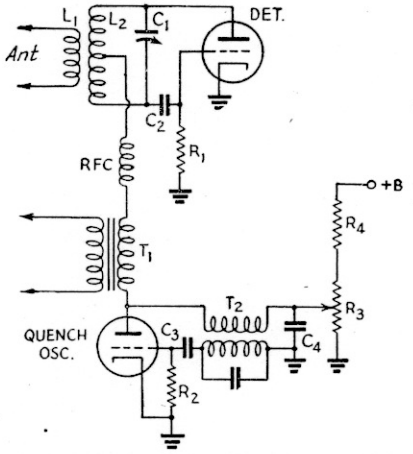

Fig. 709 — Superregenerative detector circuit using a separate quench oscillator. L_2C_1 is tuned to the signal frequency. Typical values for other components are:

C_2 — 100 μμfd.
C_3 — 500 μμfd.
C_4 — 0.1 μfd.
R_1 — 5 megohms.
R_2 — 50,000 ohms.
R_3 — 50,000-ohm potentiometer.
R_4 — 50,000 ohms.
T_1 — Audio transformer, plate-to-grid type.
RFC — R.f. choke, value depending upon the frequency in use. Special low-capacity chokes are required for the very-high frequencies.

suitable only for the reception of modulated signals, and operates best on the very-high frequencies where it has found considerable application in simple receivers.

A typical superregenerative circuit for very-high frequencies is shown in Fig. 709. The regenerative detector circuit is an ultraudion oscillator (§ 3-7). The quench frequency, obtained from a separate quench oscillator, is introduced in the plate circuit. Many other circuit arrangements are possible.

If regeneration in an ordinary regenerative circuit is carried sufficiently far, the circuit will break into a low-frequency oscillation simultaneously with that at the operating radio frequency. This low-frequency oscillation has much the same quenching effect as that from a separate oscillator, hence a circuit so operated is called a *self-quenching* superregenerative detector. This type of circuit is more successful at very-high than at ordinary communication frequencies. The frequency of the quench oscillation depends upon the feed-back and upon the time constant of the grid leak and condenser, the oscillation being a form of "blocking" or "squegging" in which the grid accumulates a strong negative charge which does leak off rapidly enough through the grid leak to prevent a relatively slow variation of the operating point.

The superregenerative detector has relatively little selectivity as compared to a regular regenerative detector, but discriminates against noise such as that from automobile ignition systems. It also has marked automatic volume control action, since strong signals are amplified much less than weak signals.

Adjustment of superregenerative detectors — Because of the greater amplification, the hiss when the superregenerative detector goes into oscillation is much stronger than with the ordinary regenerative detector. The most sensitive condition is at the point where the hiss first becomes marked. When a signal is tuned in, the hiss will disappear to a degree which depends upon the signal strength.

Lack of hiss indicates insufficient feed-back at the signal frequency, or inadequate quench voltage. Antenna loading effects will cause dead spots similar to those with regenerative detectors, and these can be overcome by the same methods. The self-quenching detector may require critical adjustment of the grid leak and grid condenser values for smooth operation, since these determine the frequency and amplitude of the quench voltage.

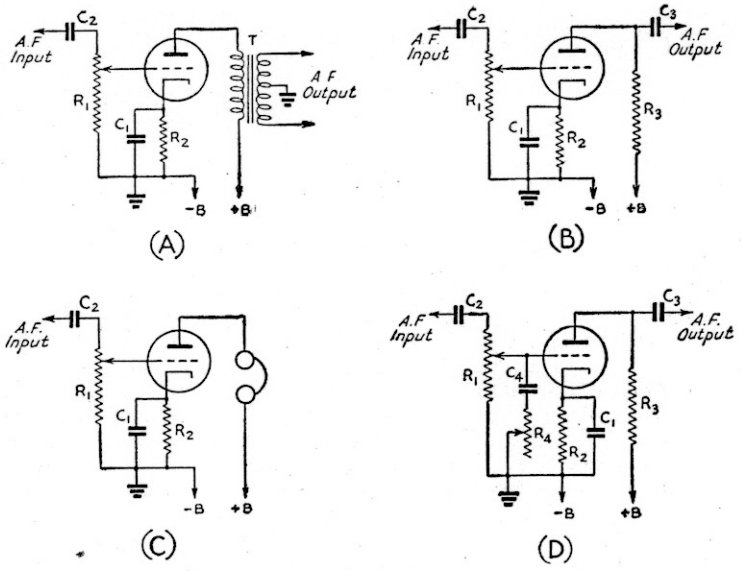

Fig. 710 — **Audio amplifier circuits used for voltage amplification and to provide power for headphone output. The tubes are operated as Class-A amplifiers (§ 3-4).**

¶ 7-5 Audio-Frequency Amplifiers

General — The ordinary detector does not produce very much audio-frequency power output — usually not enough to give satisfactory sound volume, even in headphone reception. Consequently, audio-frequency amplifiers are used after the detector to increase the power level. One amplifier usually is sufficient for headphones, but two stages generally are used where the receiver is to operate a loudspeaker. A few milliwatts of a.f. power is sufficient for headphones, but a loudspeaker requires a watt or more for good room volume.

In all except battery-operated receivers, the negative grid bias of audio amplifiers usually is secured from the voltage drop in a cathode resistor (§ 3-6). The cathode resistor must be bypassed by a condenser having low reactance at the lowest audio frequency to be amplified, compared to the resistance of the cathode resistor (10 per cent or less) (§ 2-8, 2-13). In battery-operated receivers, a separate grid-bias battery generally is used.

Headset and voltage amplifiers — The circuits shown in Fig. 710 are typical of those used for voltage amplification and for providing sufficient power for operation of headphones (§ 3-3). Triodes usually are preferred to pentodes because they are better suited to working into an audio transformer or headset, the input impedances of which are of the order of 20,000 ohms.

In these circuits, R_2 is the cathode bias resistor and C_1 the cathode by-pass condenser. The grid resistor, R_1, gives volume control action (§ 5-9). Its value ordinarily is from 0.25 to 1 megohm. C_2 is the input coupling condenser, already discussed under detectors; it is, in fact, identical to C_4 in Figs. 704 and 705, if the amplifier is coupled to a detector.

Power amplifiers — A popular type of power amplifier is the single pentode, operated Class A or AB; the circuit diagram is given in Fig. 711-A. The grid resistor, R_1, may be a potentiometer for volume control, as shown at R_1 in Fig. 710. The output transformer, T, should have a turns ratio (§ 2-9) suitable for the loudspeaker used; many of the small loudspeakers now available are furnished complete with output transformer.

When greater volume is needed, a pair of pentodes or tetrodes may be connected in push-pull (§ 3-3), as shown in Fig. 711-B. Transformer coupling to the voltage-amplifier stage is the simplest method of obtaining push-pull input for the amplifier grids. The interstage transformer, T_1, has a center-tapped secondary with a secondary-to-primary turns ratio of about 2 to 1. An output transformer, T_2, with a center-tapped primary must be used. No by-pass condenser is needed across the cathode resistor, R, since the a.f. current does not flow through the resistor as it does in single-tube circuits (§ 3-3).

Tone control — A tone control is a device for changing the frequency response (§ 3-3) of an audio amplifier; usually it is simply a method for reducing high-frequency response. This is helpful in reducing hissing and crackling noises without disturbing the intelligibility of the signal. R_4 and C_4, in Fig. 710-D, together form an effective tone control of this type. The maximum effect is secured when the resistance of R_4 is entirely out of the circuit, leaving C_4 connected directly between grid and ground. R_4 should be large compared to the reactance of C_4 (§ 2-8) so that when its resistance is all in circuit the effect of C_4 on the frequency response is negligible.

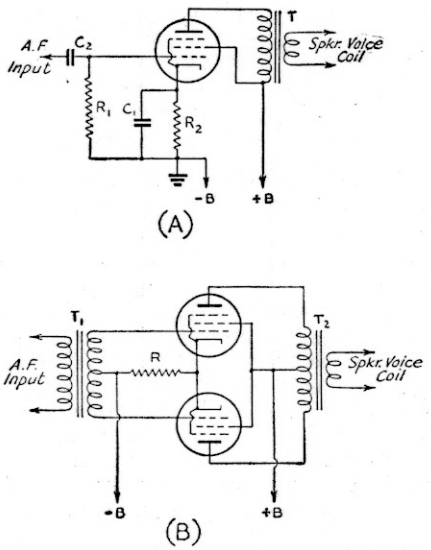

Fig. 711 — Power-output audio amplifier circuits. Either Class A or AB amplification (§ 3-4) may be used.

Headphones and loudspeakers — Two types of headphones are in general use, the *magnetic* and *crystal* types. They are shown in cross-section in Fig. 712. In the magnetic type the signal is applied to a coil or pair of coils having a great many turns of fine wire wound on a permanent magnet. (Headphones having one coil are known as the "single-pole" type, while those having two coils, as shown in Fig. 712, are called "double-pole.") A thin circular diaphragm of iron is placed close to the open ends of the magnet. It is tightly clamped by the earpiece assembly around its circumference, and the center is drawn toward the permanent magnet under some tension. When an alternating current flows through the windings the field set up by the current alternately aids and opposes the steady field of the permanent magnet, so that the diaphragm alternately is drawn nearer to and allowed to spring farther away from the magnet. Its motion sets the air into corresponding vibration. Although the d.c. resistance of the coils may be of the order of 2000 ohms, the a.c. impedance of a magnetic type headset will be of the order of 20,000 ohms at 1000 cycles.

In the crystal headphone, two piezoelectric crystals (§ 2-10) of Rochelle salts are cemented together in such a way that the pair tends to be bent in one direction when a voltage of a certain polarity is applied and to bend in the other direction when the polarity is reversed. The crystal unit is rigidly mounted to the earpiece, with the free end coupled to a diaphragm. When an alternating voltage is applied, the alternate bending as the polarity of the applied voltage reverses makes the diaphragm vibrate back and forth. The impedance is several times that of the magnetic type.

Magnetic-type headsets tend to give maximum response at frequencies of the order of 500 to 1000 cycles, with a considerable reduction of response (for constant applied voltage) at frequencies both above and below this region. The crystal type has a "flatter" frequency-response curve, and is particularly good at reproducing the higher audio frequencies. The peaked response curve of the magnetic type is advantageous in code reception, since it tends to reduce interference from signals having beat tones lying outside the region of maximum response, while the crystal type is better for the reception of voice and music. Magnetic headsets can be used in circuits in which d.c. is flowing, such as the plate circuit of a vacuum tube, providing the current is not too large to be carried safely by the wire in the coils; the limit is a few milliamperes. Crystal headsets must be used only on a.c. (since a steady d.c. voltage will damage the crystal unit), and consequently must be coupled to the tube through a device, such as a condenser, which isolates the d.c. voltage but permits the passage of an alternating current.

The most common type of loudspeaker is the *dynamic* type, shown in cross-section in Fig.

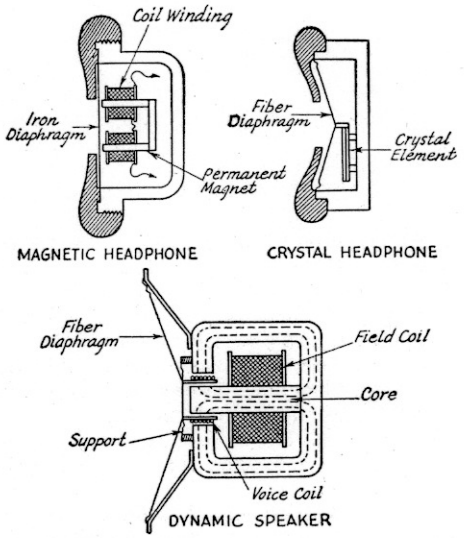

Fig. 712 — Headphone and loudspeaker construction.

712. The signal is applied to a small coil (the *voice coil*) which is free to move in the gap between the ends of a magnet. The magnet is made in the form of a cylindrical coil slightly smaller than the form on which the voice coil is wound, with the magnetic circuit completed through a pole piece which fits around the outside of the voice coil leaving just enough clearance for free movement of the coil. The path of the flux through the magnet is as shown by the dotted lines in the figure. The voice coil is supported so that it is free to move along its axis but not in other directions, and is fastened to a fiber or paper conical diaphragm. When current is sent through the coil it moves in a direction determined by the polarity of the current (§ 2-5), and thus moves back and forth when an alternating voltage is applied. The motion is transmitted by the diaphragm to the air, setting up sound waves.

The type of speaker shown in Fig. 712 obtains its fixed magnetic field by electromagnetic means, direct current being sent through the *field coil* for this purpose. Other types use permanent magnets to replace the electromagnet, and hence do not require a source of d.c. power. The voice coils of dynamic speakers have few turns and therefore low impedance, values of 3 to 15 ohms being representative.

¶ 7-6 Radio-Frequency Amplifiers

Circuits — Although there may be variations in detail, practically all r.f. amplifiers conform to the basic circuit shown in Fig. 713. A screen-grid tube, usually a pentode, is used, since a triode will oscillate when its grid and plate circuits are tuned to the same frequency (§ 3-5). The amplifier operates Class A, without grid current (§ 3-4). The tuned grid circuit, L_1C_1, is coupled through L_2 to the antenna (or, in some cases, to a preceding stage). R_1 and C_2 are the cathode bias resistor and by-pass condenser, C_3 is the screen by-pass condenser, and R_2 is the screen dropping resistor. L_3 is the primary of the output transformer (§ 2-11), tightly coupled to L_4, which, with C_5, constitutes the tuned circuit feeding the detector or following amplifier. The input and output circuits, L_1C_1 and L_4C_5, are both tuned to the signal frequency.

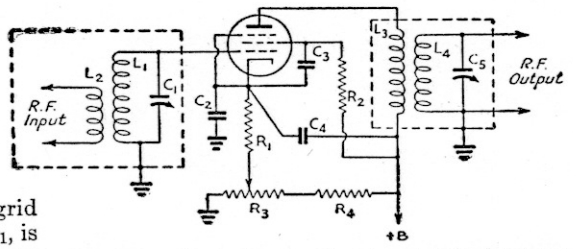

Fig. 713 — Basic circuit of a tuned radio-frequency amplifier. Component values are discussed in the text.

Shielding — The screen-grid construction of the amplifier tube prevents feed-back (§ 3-3) from plate to grid inside the tube, but in addition it is necessary to prevent transfer of energy from the plate circuit to the grid circuit external to the tube. This is accomplished by enclosing the coils in grounded shielding containers and by keeping the plate and grid leads well separated. With "single-ended" tubes, care in laying out the wiring to obtain the maximum possible physical separation between plate and grid leads is necessary to prevent capacity coupling.

The shield around a coil will reduce the inductance and Q of the coil (§ 2-11) to an extent which depends upon the shielding material and its distance from the coil (see page 420). Adjustments therefore must be made with the shield in place.

By-passing — In addition to shielding, good by-passing (§ 2-13) is imperative. This is not simply a matter of choosing the proper type and capacity of by-pass condenser. Short *separate* leads from C_3 and C_4 to cathode or ground are a prime necessity. At the higher radio frequencies even an inch of wire will have enough inductance to provide feed-back coupling, and hence cause oscillation, if the wire happens to be common to both the plate and grid circuits.

Gain control — The gain of an r.f. amplifier usually is varied by varying the grid bias. This method works best with variable-μ type tubes (§ 3-5), hence this type usually is found in r.f. amplifiers. In Fig. 713, R_3 and R_4 comprise the gain-control circuit. R_3 is the control resistor (§ 3-6) and R_4 a dropping resistor of such value as to make the voltage across the outside terminals of R_3 about 50 volts (§ 8-10). The gain is maximum with the variable arm on R_3 all the way to the left (grounded), and minimum at the right. R_3 could simply be placed in series with R_1, omitting R_4 entirely, but the range of control with this connection is limited because it depends on the cathode current alone.

In a multi-tube receiver the gain of several stages may be varied simultaneously, a single control sufficing for all. The lower ends of the several cathode resistors (R_1) are then connected together and to the movable contact on R_3 in Fig. 713.

Circuit values — The value of the cathode resistor, R_1, should be calculated for the *minimum* recommended bias for the tube used. The capacities of C_2, C_3 and C_4 must be such that the reactance is low at radio frequencies; this condition is easily met by using 0.01-μfd. condensers at communication frequencies, or 0.001 to 0.002 mica units at very-high frequencies up to 112 Mc. R_2 is found by taking the difference between the recommended plate and screen voltages, then substituting this and the rated screen current in Ohm's Law (§ 2-6). R_3 must be selected on the basis of the number of tubes to be controlled; a resistor must be chosen which is capable of carrying, at its low-resistance end, the sum of all the tube currents plus the bleeder current. A resistor of suitable current-carrying capacity being found, the bleeder current necessary to produce a drop through it of about 50 volts can be calculated by Ohm's Law. The same formula will give R_4, using the plate voltage less 50 volts for E and the bleeder current previously found for I.

The constants of the tuned circuits will depend upon the frequency range, or band, to be covered. A fairly high L/C ratio (§ 2-10) should be used on each band; this is limited, however, by the irreducible minimum capacities. To an allowance of 10 to 20 $\mu\mu$fd. for tube and stray capacities should be added the minimum capacity of the tuning condenser.

If the input circuit of the amplifier is connected to an antenna, the coupling coil, L_2, should be adjusted to provide critical coupling (§ 2-11) between the antenna and grid circuit. This will give maximum energy transfer. The turns ratio of L_1/L_2 will depend upon the frequency, the type of tube used, the Q of the tuned circuit and the constants of the antenna system, and in general is best determined experimentally. The selectivity will increase as the coupling is reduced below this "optimum" value, a consideration which it is well to keep in mind if selectivity is of more importance than maximum gain.

The output-circuit coupling depends upon the plate resistance (§ 3-2) of the tube, the input resistance of the succeeding stage, and the Q of the tuned circuit, L_4C_5. L_3 usually is coupled as closely as possible to L_4 (avoiding the necessity for an additional tuning condenser across L_3) and the energy transfer is maximum when L_3 has $\frac{2}{3}$ to $\frac{4}{5}$ as many turns as L_4, with ordinary receiving pentodes.

Tube and circuit noise — In any conductor electrons will be moving in random directions simultaneously and, as a result, small irregular voltages are developed across the conductor terminals. The voltage is larger the greater the resistance of the conductor and the higher its temperature. This is known as the *thermal-agitation* effect, and it produces a hiss-like noise voltage distributed uniformly throughout the radio-frequency spectrum. The thermal-agitation noise voltage appearing across the terminals of a tuned circuit will be the same as in a resistor of a value equal to the parallel impedance (§ 2-10) of the tuned circuit, even though the actual circuit resistance is low. Hence, the higher the Q of the circuit, the greater the thermal agitation noise.

Another component of hiss noise is developed in the tube because the rain of electrons on the plate is not entirely uniform. Small irregularities caused by gas in the tube also contribute to the effect. Tube noise varies with the type of tube; in general, the higher the cathode current and the lower the mutual conductance of the tube, the more internal noise it will generate.

To obtain the best signal-to-noise ratio, the signal must be made as large as possible at the grid of the tube, which means that the antenna coupling must be adjusted to that end and also that the Q of the grid tuned circuit must be high. A tube with low inherent noise obviously should be chosen. In an amplifier having good signal-to-noise ratio, the thermal-agitation noise will be greater than the tube noise. This can easily be checked by disconnecting the antenna so that no outside noise is being introduced into the receiver, then grounding the grid through a 0.01-μfd. condenser and observing whether there is a decrease in noise. If there is no change the tube noise is greatly predominant, indicating a poor signal-to-noise ratio in the stage. The test is valid only if there is no regeneration in the amplifier. The signal-to-noise ratio will decrease as the frequency is raised, because it becomes increasingly difficult to obtain a tuned circuit of high effective Q (§ 7-7).

The first stage of the receiver is the important one from the standpoint of signal-to-noise ratio. Noise generated in the second and subsequent stages, while comparable in magnitude to that generated in the first, is masked by the amplified noise and signal from the first stage. After the second stage, further contributions by tubes and circuits to the total noise are inconsequential in any normal receiver.

Tube input resistance — At high radio frequencies the tube may consume power from the tuned grid circuit, even though the grid is not driven positive by the signal. Above 7 Mc. all tubes "load" the tuned circuit to some extent, the amount of loading varying with the type of tube. This effect comes about because the time necessary for electrons to travel from the cathode to the grid becomes comparable to the time of one r.f. cycle, and because of the degenerative effect (§ 3-3) of the cathode lead inductance. It becomes more pronounced as the frequency is increased. Certain types of tubes may have an input resistance of only a few thousand ohms at 28 Mc. and as little as

a few hundred ohms at very-high frequencies. The input resistance of the same tubes at 7 Mc. and lower frequencies may be so high as to be considered infinite, from a practical standpoint.

This *input-loading* effect is in addition to the normal decrease in the *Q* of the tuned circuit alone, because of increased losses in the coil and condenser at the higher frequencies. Thus the selectivity and gain of the circuit both are affected adversely by increasing frequency.

Comparison of tubes — At 7 Mc. and lower frequencies, the signal-to-noise ratio, gain, and selectivity of an r.f.-amplifier stage are sufficiently high with any of the standard receiving tubes. At 14 Mc. and higher, however, this is no longer true, and the choice of a tube must be based on several conflicting considerations.

Gain is highest with high mutual-conductance pentodes, the 1851 and 1852 being examples of this type. These tubes also develop less noise than any of the others. The input-loading effect is greatest with them, however, so that selectivity is decreased and the tuned-circuit gain is lowered.

Pentodes, such as the 6K7, 6J7 and corresponding types in glass, have lesser input-loading effects at high frequencies, moderate gain, and relatively high inherent noise.

"Acorn" and equivalent miniature pentodes are excellent from the input-loading standpoint; gain is about the same as with standard types, and the inherent noise is somewhat lower.

Where selectivity is paramount the acorns are best, the standard pentodes second, and the 1851–52 types worst. On signal-to-noise ratio the 1851–52 tubes are first, acorns second and standard pentodes third. The same order of precedence holds for over-all gain.

At 56 Mc. the standard types are usable, but acorns are capable of better performance because of lesser loading. The 954 and 956 and the corresponding types, 9001 and 9003, are practically the only usable types for r.f. amplification at 112 Mc. and higher.

¶ 7-7 Tuning and Band-Changing Methods

Band-changing — The resonant circuits which are tuned to the frequency of the incoming signal constitute a special problem in the design of amateur receivers, since the amateur frequency assignments consist of groups or bands of frequencies at widely spaced intervals. The same *LC* combination cannot be used for, say, 14 Mc. to 3.5 Mc., because of the impracticable maximum-minimum capacity ratio required, and also because the tuning would be excessively critical with such a large frequency range. It is necessary, therefore, to provide a means for changing the circuit constants for various frequency bands. As a matter of convenience the same tuning condenser usually is retained, but new coils are inserted in the circuit for each band.

There are two favorite methods of changing inductances. One is to use a switch having an appropriate number of contacts, which connects the desired coil and disconnects the others. The second is to use coils wound on forms with contacts (usually pins) which can be plugged in and removed from a socket.

Bandspreading — The tuning range of a given coil and variable condenser will depend upon the inductance of the coil and the change in tuning capacity. For ease of tuning, it is desirable to adjust the tuning range so that practically the whole dial scale is occupied by the band in use. This is called *bandspreading*. Because of the varying widths of the bands, special tuning methods must be devised to give the correct maximum-minimum capacity ratio on each band. Several of these methods are shown in Fig. 714.

In A, a small *bandspread condenser*, C_1 (15 to 25 $\mu\mu$fd. maximum capacity), is used in parallel with a condenser, C_2, which is usually large enough (140 to 175 $\mu\mu$fd.) to cover a 2-to-1 frequency range. The setting of C_2 will determine the minimum capacity of the circuit, and the maximum capacity for bandspread tuning will be the maximum capacity of C_1 plus the setting of C_2. The inductance of the coil can be adjusted so that the maximum-minimum ratio will give adequate bandspread. In practicable circuits it is almost impossible, because of the non-harmonic relation of the various bands, to get full bandspread on all bands with the same pair of condensers, especially when the coils are wound to give continuous frequency coverage on C_2, which is variously called the *band-setting* or *main-tuning* condenser. C_2 must be reset each time the band is changed.

The method shown at B makes use of condensers in series. The tuning condenser, C_1, may have a maximum capacity of 100 $\mu\mu$fd. or more. The minimum capacity is determined principally by the setting of C_3, which usually has low capacity, and the maximum capacity by the setting of C_2, which is of the order of 25 to 50 $\mu\mu$fd. This method is capable of close adjustment to practically any desired degree of bandspread. Either C_2 and C_3 must be adjusted for each band or separate pre-adjusted condensers must be switched in.

The circuit at C also gives complete spread on

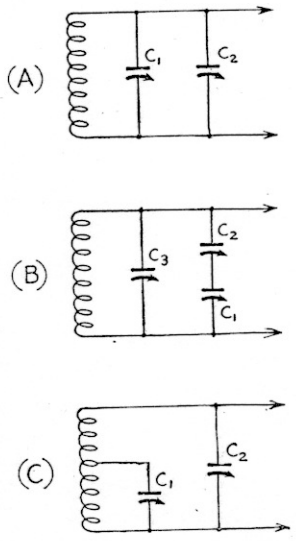

Fig. 714 — Essentials of three bandspread tuning systems.

each band. C_1, the bandspread condenser, may have any convenient value of capacity; 50 $\mu\mu$fd. is satisfactory. C_2 may be used for continuous frequency coverage ("general coverage") and as a band-setting condenser. The effective maximum-minimum capacity ratio depends upon the capacity of C_2 and the point at which C_1 is tapped on the coil. The nearer the tap to the bottom of the coil, the greater the bandspread, and vice versa. For a given coil and tap, the bandspread will be greater if C_2 is set at larger capacity. C_2 may be mounted in the plug-in coil form and pre-set, if desired. This requires a separate condenser for each band, but eliminates the necessity for resetting C_2 each time the band is changed.

Ganged tuning — The tuning condensers of the several r.f. circuits may be coupled together mechanically and operated by a single control. However, this operating convenience involves more complicated construction, both electrically and mechanically. It becomes necessary to make the various circuits *track* — that is, tune to the same frequency at each setting of the tuning control.

True tracking can be obtained only when the inductance, tuning condensers, and circuit minimum and maximum capacities are identical in all "ganged" stages. A small *trimmer* or *padding* condenser may be connected across the coil, so that variations in minimum capacity can be compensated. The fundamental circuit is shown in Fig. 715, where C_1 is the trimmer and C_2 the tuning condenser. The use of the trimmer increases the minimum circuit capacity, but is a necessity for satisfactory tracking. Condensers having maximum capacities of 15 to 30 $\mu\mu$fd. are commonly used.

The same methods are applied to bandspread circuits which must be tracked. The circuits are identical with those of Fig. 714. If both general-coverage and bandspread tuning are to be available, an additional trimmer condenser must be connected across the coil in each circuit shown. If only amateur-band tuning is desired, however, then C_3 in Fig. 714-B, and C_2 in Fig. 714-C serve as trimmers.

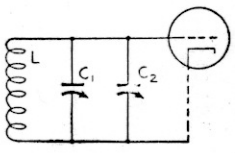

Fig. 715 — Showing the use of a trimmer condenser, C_1, across the tuned circuit to set the minimum circuit capacity in order to obtain true tracking for gang-tuning.

The coil inductance can be adjusted by starting with a larger number of turns than necessary and removing a turn or fraction of a turn at a time until the circuits track satisfactorily. An alternative method, provided the inductance is reasonably close to the correct value initially, is to make the coil so that the last turn is variable with respect to the whole coil, or to use a single short-circuited turn the position of which can be varied with respect to the coil. These methods are shown in Fig. 716.

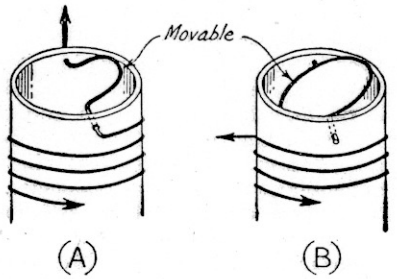

Fig. 716 — Methods of adjusting the inductance for ganging. The half turn in A can be moved so that its magnetic field either aids or opposes the field of the coil. The shorted loop in B is not connected to the coil, but operates by induction. It will have no effect on the coil inductance when the plane of the loop is parallel to the axis of the coil, and will give maximum reduction of the coil inductance when perpendicular to the coil axis.

V.h.f. circuits — Interelectrode capacities are practically constant for a given tube regardless of the operating frequency, and the same is approximately true of stray circuit capacities. Hence, at very-high frequencies these capacities become an increasingly larger part of the usable tuning capacity, and reasonably high L/C ratios (§ 2-10) are more difficult to secure as the frequency is raised. Because of this irreducible minimum capacity, standard types of tubes cannot be tuned to frequencies higher than about 200 Mc., even when the inductance in the circuit is simply that of a straight wire between the tube elements.

Along with these capacity effects, the input loading (§ 7-6) increases rapidly at very-high frequencies, so that ordinary tuned circuits have very low effective Qs when connected to the grid circuit of a tube. The effect is still further aggravated by the fact that losses in the tuned circuit itself are higher, causing a still further reduction in Q. For these reasons, the frequency limit at which an r.f. amplifier will give any gain is in the vicinity of 60 Mc. with standard tubes. At higher frequencies there will be a loss, instead of amplification. This condition can be mitigated somewhat by taking steps to improve the effective Q of the circuit, either by tapping the grid down on the coil, as shown in Fig. 717-A, or by using a lower L/C ratio (§ 2-10). The Q of the tuned circuit alone can be greatly improved by using a linear circuit (§ 2-12), which when properly constructed will give Qs much higher than those attainable at lower frequencies with conventional coils and condensers. The concentric type of line, Fig. 717-B, is best both from the standpoint of Q and of adaptability to non-symmetrical circuits such as are used in receivers. Since the capacity and resistance loading effects of the tube are still present, the Q of such a circuit will be destroyed if the grid-cathode circuit of the tube is connected directly across it. Hence, tapping down on the line, as shown, is necessary.

Very-high-frequency amplifiers should employ tubes of the acorn type, which have the

least loading effect as well as low interelectrode capacities. This is because the smaller loading effect means higher input resistance, and, for a given loaded Q of the tuned circuit, a higher voltage developed between the grid and cathode. Thus the amplification of the stage is higher.

A concentric circuit may be tuned by varying the length of the inner conductor (usually by using close-fitting tubes, one sliding inside the other) or by connecting an ordinary tuning condenser across the line. Tapping the condenser down, as shown in Fig. 717-B, gives a bandspread effect, which is advantageous. It also helps to keep the Q of the circuit higher than it would be with the condenser connected directly across the open end of the line, since at very-high frequencies most condensers have losses which cannot be neglected.

V.h.f. oscillators such as those used in the superregenerative detector usually will work well at frequencies where r.f. amplification is impossible with standard tubes (as in the 112-Mc. band), since tube losses are compensated for by energy taken from the power supply. Ordinary coil and condenser circuits are practicable with such tubes at 112 Mc.

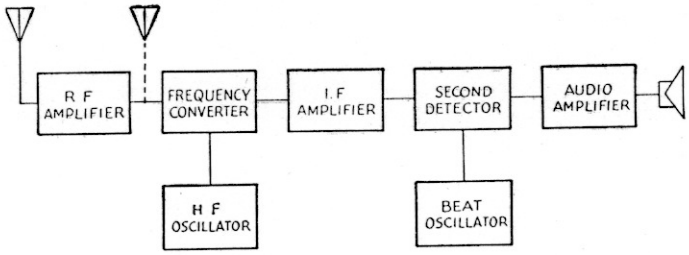

Fig. 718 — Block diagram of the basic elements of the superheterodyne

¶ 7-8 The Superheterodyne

Principles — In the *superheterodyne*, or *superhet*, receiver the frequency of the incoming signal is changed to a new radio frequency, the *intermediate frequency* (*i.f.*), then amplified, and finally detected. The frequency is changed by means of the heterodyne process (§ 7-1), the output of an adjustable *local oscillator* (the *h.f. oscillator*) being combined with the incoming signal in a *mixer* or *converter* stage (*first detector*) to produce a beat frequency equal to the i.f. Fig. 718 gives the essentials of the superheterodyne in block form. C.w. signals are made audible by heterodyning the signal at the second detector by the *beat-frequency oscillator* (*b.f.o.*) or *beat oscillator*, set to differ from the i.f. by a suitable audio frequency.

As a numerical example, assume that an intermediate frequency of 455 kc. is chosen and that the incoming signal is on 7000 kc. Then the h.f. oscillator frequency may be set to 7455 kc., in order that the beat frequency (7455 minus 7000) will be 455 kc. The h.f. oscillator also could be set to 6545 kc., which will give the same frequency difference. To produce an audible c.w. signal of, say, 1000 cycles at the second detector, the beat oscillator would be set to either 454 kc. or 456 kc.

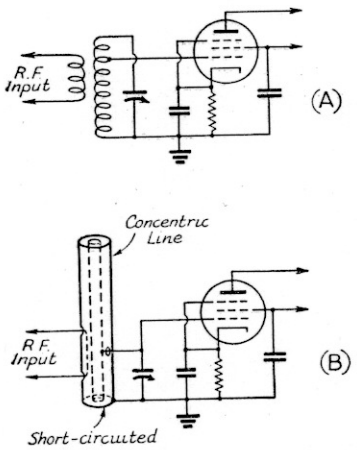

Fig. 717 — Circuits of improved Q for very-high frequencies. A, reducing tube loading by tapping down on the resonant circuit; B, use of a concentric-line circuit, with the tube similarly tapped down. The line should be a quarter-wave long, electrically; because of the additional shunt capacity represented by the tube, the physical length will be somewhat less than given by the formula (§ 10-5). In general, this reduction in length will be greater the higher the grid tap on the inner conductor. The coupling turn should be parallel to the axis of the line and must be insulated from the outer conductor.

Characteristics — The frequency-conversion process permits r.f. amplification at a relatively low frequency. Thus high selectivity can be obtained, and this selectivity is constant regardless of the signal frequency. Higher gain also is possible at the lower frequency. The separate oscillators can be designed for stability, and, since the h.f. oscillator is working at a frequency considerably removed from the signal frequency, its stability is practically unaffected by the incoming signal.

Images — Each h.f. oscillator frequency will cause i.f. response at two signal frequencies, one higher and one lower than the oscillator frequency. If the oscillator is set to 7455 kc. to respond to a 7000-kc. signal, for example, it will respond also to a signal on 7910 kc., which likewise gives a 455-kc. beat. The undesired signal of the two is called the *image*.

The radio-frequency circuits of the receiver (those used before the frequency is converted to the i.f.) normally are tuned to the desired signal, so that the selectivity of the circuits reduces the response to the image signal. If the desired signal and image have equal strengths at the input terminals of the receiver, the ratio of the receiver voltage output from the desired signal to that from the image is called the *signal-to-image ratio*, or *image ratio*.

The image ratio depends upon the selectivity of the r.f. tuned circuits preceding the mixer

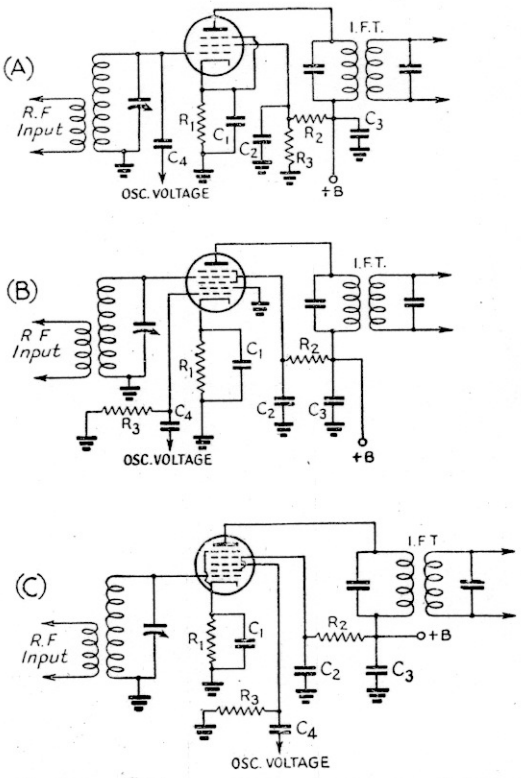

Fig. 719 — Mixer or converter circuits. A, grid injection with a pentode plate detector; B and C, separate injection circuits for converter tubes. Circuit values are:

Component	*Circuit A*	*Circuit B*	*Circuit C*
C_1, C_2, C_3 —	0.01–0.1 μfd.	0.01–0.1 μfd.	0.01–0.1 μfd.
C_4 —	Approx. 1 μμfd.	50–100 μμfd.	50–100 μμfd.
R_1 —	10,000 ohms.	300 ohms.	500 ohms.
R_2 —	0.1 megohm.	50,000 ohms.	15,000 ohms.
R_3 —	50,000 ohms.	50,000 ohms.	50,000 ohms.

Plate voltage should be 250 in all circuits. If an 1851 or 1852 tube is used in Circuit A, R_1 should be 500 ohms.

tube. Also, the higher the intermediate frequency, the higher the image ratio, since raising the i.f. increases the frequency separation between signal and image and places the latter farther away from the peak of the resonance curve (§ 2-10) of the signal-frequency circuits.

Other spurious responses — In addition to images, other signals to which the receiver is not ostensibly tuned may be heard. Harmonics of the high-frequency oscillator may beat with signals far removed from the desired frequency to produce output at the intermediate frequency; such spurious responses can be reduced by adequate selectivity before the mixer stage, and by using sufficient shielding to prevent signal pick-up by any means other than the antenna. When a strong signal is received, the harmonics (§ 2-7) generated by rectification in the second detector may, by stray coupling, be introduced into the r.f. or mixer circuit and converted to the intermediate frequency, to go through the receiver in the same way as an ordinary signal. These "birdies" appear as a heterodyne beat on the desired signal, and are principally bothersome when the frequency of the incoming signal is not greatly different from the intermediate frequency. The cure is proper circuit isolation and shielding.

Harmonics of the beat oscillator also may be converted in similar fashion and amplified through the receiver; these responses can be reduced by shielding the beat oscillator and operating it at low output level.

The double superhet — At high and very-high frequencies it is difficult to secure an adequate image ratio when the intermediate frequency is of the order of 455 kc. To reduce image response the signal frequently is converted first to a rather high (1500, 5000, or even 10,000 kc.), and then — sometimes after further amplification — reconverted to a lower i.f. where higher adjacent-channel selectivity can be obtained. Such a receiver is called a *double superheterodyne.*

7-9 Frequency Converters

Characteristics — The first detector or mixer resembles an ordinary detector. A circuit tuned to the intermediate frequency is placed in the plate circuit of the mixer, so that the highest possible i.f. voltage will be developed. The signal- and oscillator-frequency voltages appearing in the plate circuit are bypassed to ground, since they are not wanted in the output. The i.f. tuned circuit should have low impedance for these frequencies, a condition easily met if they do not approach the intermediate frequency.

The *conversion efficiency* of the mixer is the ratio of i.f. output voltage from the plate circuit to r.f. signal voltage applied to the grid. High conversion efficiency is desirable. The mixer tube noise also should be low if a good signal-to-noise ratio is wanted, particularly if the mixer is the first tube in the receiver.

The mixer should not require too much r.f. power from the h.f. oscillator, since it may be difficult to supply the power and maintain good oscillator stability (§ 3-7). Also, the conversion efficiency should not depend too critically on the oscillator voltage (that is, a small change in oscillator output should not change the gain), since it is difficult to maintain constant output over a wide frequency range.

A change in oscillator frequency caused by tuning of the mixer grid circuit is called *pulling.* If the mixer and oscillator could be completely isolated, mixer tuning would have no effect on the oscillator frequency; but in practice this is a difficult condition to attain. Pulling causes oscillator instability and should be minimized, because the stability of the whole receiver depends critically upon the stability of the h.f. oscillator. Pulling effect decreases with separation of the signal and h.f. oscillator frequencies, hence is less with high intermediate frequencies and greater with low i.f.s.

Circuits — Typical frequency-conversion circuits are given in Fig. 719. The variations are chiefly in the way in which the oscillator volt-

age is introduced. In Fig. 719-A, the screen-grid pentode functions as a plate detector; the oscillator is capacity-coupled to the grid of the tube, in parallel with the tuned input circuit. Inductive coupling may be used instead. The conversion gain and input selectivity generally are good, so long as the sum of the two voltages (signal and oscillator) impressed on the mixer grid does not exceed the grid bias. It is desirable to make the oscillator voltage as high as possible without exceeding this limitation. The oscillator power required is negligible.

A pentagrid-converter tube is used in the circuit at B. Although intended for combination oscillator-mixer use, this type of tube usually will give more satisfactory performance when used in conjunction with a separate oscillator, the output of which is coupled in as shown. The circuit gives good conversion efficiency, and, because of the electron coupling, affords desirable isolation between the mixer and oscillator circuits. A small amount of power is required from the oscillator.

Circuit C is for the 6L7 mixer tube. The oscillator voltage can vary over a considerable range without affecting the conversion gain. There are no critical adjustments, and the oscillator-mixer isolation is good. The oscillator must supply somewhat more power than in B.

A more stable receiver generally results, particularly at the higher frequencies, when separate tubes are used for the mixer and oscillator. Practically the same number of circuit components is required whether or not a combination tube is used, so that there is little difference from the cost standpoint.

Tubes for frequency conversion — Any sharp cut-off pentode may be used in the circuit of Fig. 719-A. The 1851 and 1852 give high conversion gain and excellent signal-to-noise ratio — comparable, in fact, to the gain and signal-to-noise ratio obtainable with r.f. amplifiers — and in these respects are far superior to any other tubes used as mixers. However, this type of tube loads the circuit more (§ 7-6) and thus decreases the selectivity.

The 6K8 is a good tube for the circuit at B; its oscillator plate connection may be ignored. The 6SA7 also is excellent in this circuit, although it has no anode grid (No. 2 grid, in the diagram). In addition to these two types, any pentagrid converter tube may be used.

¶ 7-10 The High-Frequency Oscillator

Design considerations — Stability of the receiver (§ 7-2) is dependent chiefly upon the stability of the h.f. oscillator, and particular care should be given this part of the receiver. The frequency of oscillation should be insensitive to changes in voltage, loading, and mechanical shock. Thermal effects (slow change in frequency because of tube or circuit heating) should be minimized. These ends can be attained by the use of good insulating materials and circuit components, suitable electrical design, and careful mechanical construction.

In addition, the oscillator must be capable of furnishing sufficient r.f. voltage and power for the particular mixer circuit chosen, at all frequencies within the range of the receiver, and its harmonic output should be as low as possible tc reduce spurious response (§ 7-8).

It is desirable to make the L/C ratio in the oscillator tuned circuit low (high-C), since this results in increased stability (§ 3-7). Particular care should be taken to insure that no part of the oscillator circuit can vibrate mechanically. This calls for short leads and "solid" mechanical construction. The chassis and panel material should be heavy, and rigid enough so that pressure on the tuning dial will not cause torsion and a shift in the frequency. Care in mechanical construction is well repaid by increased frequency stability.

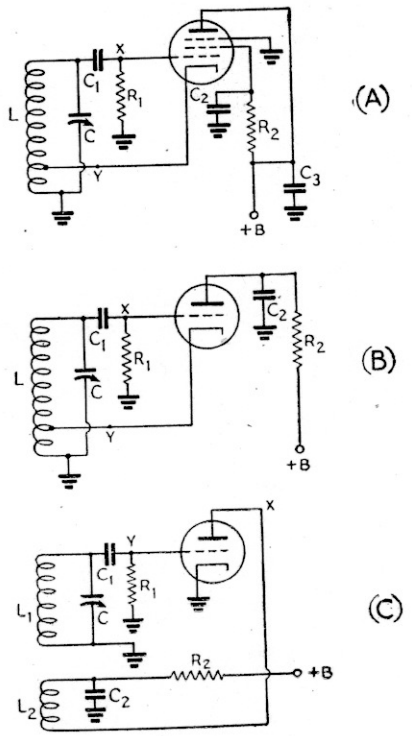

Fig. 720 — High-frequency oscillator circuits. A, screen-grid grounded-plate oscillator; B, triode grounded-plate oscillator; C, triode oscillator with tickler circuit. Coupling to the mixer may be taken from points X and Y. In A and B, coupling from Y will reduce pulling effects, but gives less voltage than from X; this type is best adapted to mixer circuits with small oscillator-voltage requirements. Typical values for components are as follows:

	Circuit A	*Circuit B*	*Circuit C*
C_1 —	100 $\mu\mu$fd.	100 $\mu\mu$fd.	100 $\mu\mu$fd.
C_2 —	0.1 μfd.	0.1 μfd.	0.1 μfd.
C_3 —	0.1 μfd.		
R_1 —	50,000 ohms.	50,000 ohms.	50,000 ohms.
R_2 —	50,000 ohms.	10,000 to 25,000 ohms.	10,000 to 25,000 ohms.

The plate-supply voltage should be 250 volts. In circuits B and C, R_2 is used to drop the supply voltage to 100–150 volts; it may be omitted if voltage is obtained from a voltage divider in the power supply (§ 8-10).

Circuits — Several oscillator circuits are shown in Fig. 720. The point at which output voltage is taken for the mixer is indicated in each case by *X* or *Y*. Circuits A and B will give about the same results, and require only one coil. However, in these two circuits the cathode is above ground potential for r.f., which often is a cause of hum modulation of the oscillator output at 14 Mc. and higher frequencies when 6.3-volt heater tubes are used. Hum usually is not bothersome with 2.5-volt tubes, nor, of course, with tubes which are heated by direct current. The circuit of Fig. 720-C overcomes hum, since the cathode is grounded. The two-coil arrangement is advantageous in construction, since the feed-back adjustment (altering the number of turns on L_2 or the coupling between L_1 and L_2) is simple mechanically.

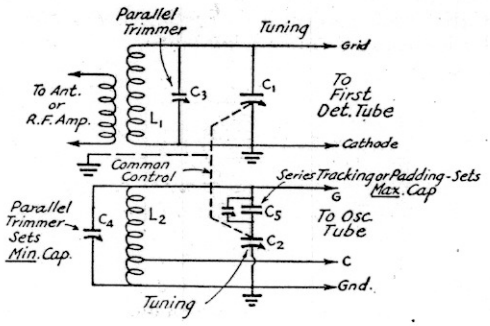

A

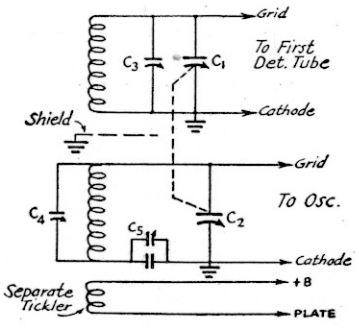

B

Fig. 721 — Converter-circuit tracking methods. Following are approximate circuit values for 450- to 465-kc. i.f.s, with tuning ranges of approximately 2.15-to-1 and C_2 having 140 $\mu\mu$fd. maximum, and the total minimum capacitance, including C_3 or C_4, being 30 to 35 $\mu\mu$fd.

Tuning Range	L_1	L_2	C_5
1.7–4 Mc.	50 μh.	40 μh.	0.0013 μfd.
3.7–7.5 Mc.	14 μh.	12.2 μh.	0.0022 μfd.
7–15 Mc.	3.5 μh.	3 μh.	0.0045 μfd.
14–30 Mc.	0.8 μh.	0.78 μh.	None used

Approximate values for 450- to 465-kc. i.f.s with a 2.5-to-1 tuning range, C_1 and C_2 being 350-$\mu\mu$fd. maximum, minimum including C_3 and C_4 being 40 to 50 $\mu\mu$fd.

Tuning Range	L_1	L_3	C_5
0.5–1.5 Mc.	240 μh.	130 μh.	425 $\mu\mu$fd.
1.5–4 Mc.	32 μh.	25 μh.	0.00115 μfd.
4–10 Mc.	4.5 μh.	4 μh.	0.0028 μfd.
10–25 Mc.	0.8 μh.	0.75 μh.	None used

Besides the use of a fairly high C/L ratio in the tuned circuit, it is necessary to adjust the feed-back to obtain optimum results. Too much feed-back will cause the oscillator to "squeg," or operate at several frequencies simultaneously (§ 7-4); too little feed-back will cause the output to be low. In the tapped-coil circuits (A, B), the feed-back is increased by moving the tap toward the grid end of the coil; in *C*, by increasing the number of turns on L_2 or by moving L_2 closer to L_1.

The oscillator plate voltage should be as low as is consistent with adequate output. Low plate voltage will cause reduced tube heating and thereby reduce frequency drift. The oscillator and mixer circuits should be well isolated, preferably by shielding, since coupling other than by the means intended may result in pulling.

To avoid plate-voltage changes which may cause the oscillator frequency to change, it is good practice to use a regulated plate supply employing a gaseous voltage-regulator tube (§ 8-8).

Tracking — For ganged tuning, there must be a *constant difference* in frequency between the oscillator and mixer circuits. This difference must be exactly equal to the intermediate frequency (§ 7-8).

Tracking methods for covering a wide frequency range, suitable for general-coverage receivers, are shown in Fig. 721. The tracking capacity, C_5, commonly consists of two condensers in parallel, a fixed one of somewhat less capacity than the value needed and a smaller variable in parallel to allow for adjustment to the exact proper value. In practice, the trimmer, C_4, is first set for the high-frequency end of the tuning range, and then the tracking condenser is set for the low-frequency end. The tracking capacity becomes larger as the percentage difference between the oscillator and signal frequencies becomes smaller (that is, as the signal frequency becomes higher). Typical circuit values are given in the tables under Fig. 721.

In amateur-band receivers, tracking is simplified by choosing a bandspread circuit which gives practically straight-line-frequency tuning (equal frequency change for each dial division), and then adjusting the oscillator and mixer tuned circuits so that both cover the same total number of kilocycles. For example, if the i.f. is 455 kc. and the mixer circuit tunes from 7000 to 7300 kc. between two given points on the dial, then the oscillator must tune from 7455 to 7755 kc. between the same two dial readings. With the bandspread arrangement of Fig. 714-C, the tuning will be practically straight-line-frequency if the capacity actually in use at C_2 is not too small; the same is true of 714-A if C_1 is small compared to C_2.

§ 7-11 The Intermediate-Frequency Amplifier

Choice of frequency — The selection of an intermediate frequency is a compromise between various conflicting factors. The lower the i.f. the higher the selectivity and gain, but a low i.f. brings the image nearer the desired signal and hence decreases the image ratio (§ 7-8). A low i.f. also increases pulling of the oscillator frequency (§ 7-9). On the other hand, a high i.f. is beneficial to both image ratio and pulling, but the selectivity and gain are lowered. The difference in gain is least important.

An i.f. of the order of 455 kc. gives good selectivity and is satisfactory from the standpoint of image ratio and oscillator pulling at frequencies up to 7 Mc. The image ratio is poor at 14 Mc. when the mixer is connected to the antenna, but adequate when there is a tuned r.f. amplifier between antenna and mixer. At 28 Mc. and on the very-high frequencies, the image ratio is very poor unless several r.f. stages are used. Above 14 Mc., pulling is likely to be bad unless very loose coupling can be used between mixer and oscillator.

With an i.f. of about 1600 kc., satisfactory image ratios can be secured on 14, 28 and 56 Mc., and pulling can be reduced to negligible proportions. However, the i.f. selectivity is considerably lower, so that more tuned circuits must be used to increase the selectivity. For very-high frequencies, including 28 Mc., the best solution is to use a double superheterodyne (§ 7-8), choosing one high i.f. for image reduction (5 and 10 Mc. are frequently used) and a lower one for gain and selectivity.

In choosing an i.f. it is wise to avoid frequencies on which there is considerable activity by the various radio services, since such signals may be picked up directly on the i.f. wiring. The frequencies mentioned are fairly free of such interference.

Fidelity, sideband cutting — As described in § 5-2, modulation of a carrier causes the generation of sideband frequencies numerically equal to the carrier frequency plus and minus the highest modulation frequency present. If the receiver is to give a faithful reproduction of modulation which contains, for instance, audio frequencies up to 5000 cycles, it must be capable of amplifying equally all frequencies contained in a band extending from 5000 cycles above to 5000 cycles below the carrier frequency. In a superheterodyne, where all carrier frequencies are changed to the fixed intermediate frequency, this means that the i.f. amplifier should amplify equally well all frequencies within that band. In other words, the amplification must be uniform over a band 10 kc. wide, with the i.f. at its center. The signal-frequency circuits usually do not have enough over-all selectivity to affect materially the "adjacent channel" selectivity (§ 7-2), so that only the i.f. amplifier selectivity need be considered.

A 10-kc. band is considered sufficient for reasonably faithful reproduction of music, but much narrower band-widths can be used for communication work where intelligibility rather than fidelity is the primary objective. If the selectivity is too great to permit uniform amplification over the band of frequencies occupied by the modulated signal, the higher modulating frequencies are attenuated as compared to the lower frequencies; that is, the upper-frequency sidebands are "cut." While sideband cutting reduces fidelity, it is frequently preferable to sacrifice naturalness of reproduction in favor of greater selectivity.

The selectivity of an i.f. amplifier, and hence the tendency to cut sidebands, increases with the number of amplifier stages and also is greater the lower the intermediate frequency. From the standpoint of communication, sideband cutting is not serious with two-stage amplifiers at frequencies as low as 455 kc.

Circuits — I.f. amplifiers usually consist of one or two stages. Two stages at 455 kc. give all the gain usable, in view of the minimum receiver noise level, and also give suitable selectivity for good-quality 'phone reception.

A typical circuit arrangement is shown in Fig. 722. A second stage would simply duplicate the circuit of the first. In principle, the i.f. amplifier is the same as the tuned r.f. amplifier (§ 7-6). However, since a fixed frequency is used, the primary as well as the secondary of the coupling transformer is tuned, giving higher selectivity than is obtainable with a closely coupled untuned primary. The cathode resistor, R_1, is connected to a gain control circuit of the type previously described (§ 7-6); usually both stages, if two are used, are controlled by a single variable resistor. The decoupling resistor, R_3 (§ 2-11), helps isolate the amplifier, and thus prevents stray feed-back. C_2 and R_4 are part of the automatic volume-control circuit (§ 7-13); if no a.v.c. is used, the lower end of the i.f. transformer secondary is simply connected to ground.

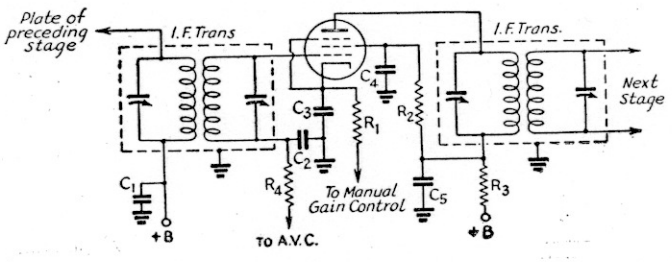

Fig. 722 — Typical intermediate-frequency amplifier circuit for a superheterodyne receiver. Representative values for components are as follows:
C_1 — 0.1 μfd. at 455 kc.; 0.01 μfd. at 1600 kc. and higher.
C_2 — 0.01 μfd.
C_3, C_4, C_5 — 0.1 μfd. at 455 kc.; 0.01 μfd. above 1600 kc.
R_1 — 300 ohms. R_3 — 2000 ohms.
R_2 — 0.1 megohm. R_4 — 0.25 megohm.

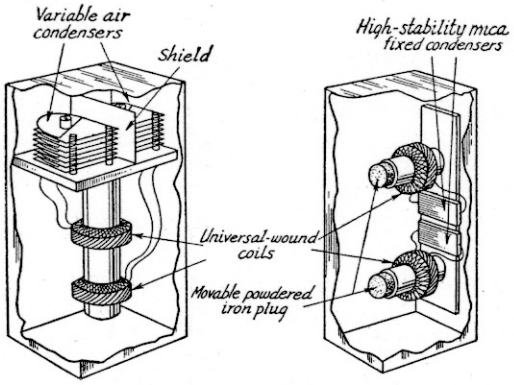

Fig. 723 — Representative i.f. transformer construction. Coils are supported on insulating tubing or (in the air-tuned type) on wax-impregnated wooden dowels. The shield in the air-tuned transformer prevents capacity coupling between the tuning condensers. In the permeability-tuned transformer the cores consist of finely divided iron particles supported in an insulating binder, formed into cylindrical "plugs." The tuning capacity is fixed, and the inductances of the coils are varied by moving the iron plugs in and out.

In a two-stage amplifier the screen grids of both stages may be fed from a common supply, either through a resistor (R_2) as shown, the screens being connected in parallel, or from a voltage divider (§ 8-10) across the plate supply. Separate screen voltage-dropping resistors are preferable for preventing undesired coupling between stages.

When two stages are used the high gain will tend to cause instability and oscillation, so that good shielding, by-passing, and careful circuit arrangement to prevent stray coupling, with exposed r.f. leads well separated, is necessary.

I.f. transformers — The tuned circuits of i.f. amplifiers are built up as transformer units consisting of a metal-shield container in which the coils and tuning condensers are mounted. Both air-core and powdered-iron-core universal-wound coils are used, the latter having somewhat higher *Q*s and, hence, greater selectivity and gain per unit. In universal windings the coil is wound in layers but with each turn traversing the length of the coil, back and forth, rather than being wound in a plane perpendicular to the axis as it is in ordinary single-layer coils. With straight layer winding, the turns on adjacent layers at the edges of the coil have a rather large potential difference between them as compared to the difference between any two adjacent turns in the same layer; hence a fairly large capacity current can flow between layers. Universal winding, with its "criss-crossed" turns, tends to avoid building up such potential differences, and hence reduces distributed-capacity effects (§ 2-8).

Variable tuning condensers are of the midget type, air-dielectric condensers being preferable because their capacity is practically unaffected by changes in temperature and humidity. Iron-core transformers may be tuned by varying the inductance (permeability tuning), in which case stability comparable to that of variable air-condenser tuning can be obtained by use of high-stability fixed mica condensers. Such stability is of great importance, since a circuit whose frequency "drifts" with time eventually will be tuned to a different frequency than the other circuits, thereby reducing the gain and selectivity of the amplifier. Typical i.f. transformer construction is shown in Fig. 723.

Besides the type of i.f. transformer shown in Fig. 723, special units to give desired selectivity characteristics are available. For higher than ordinary adjacent-channel selectivity (§ 7-2) *triple-tuned* transformers, with a third tuned circuit inserted between the input and output windings, are used. The energy is transferred from the input to the output windings via this *tertiary* winding, thus adding its selectivity to the over-all selectivity of the transformer. *Variable-selectivity* transformers also can be obtained. These usually are provided with a third (untuned) winding which can be connected to a resistor, thereby loading the tuned circuits and decreasing the *Q* and selectivity (§ 2-10) to broaden the selectivity curve. The variation in selectivity is brought about by switching the resistor in and out of the circuit. Another method is to vary the coupling between primary and secondary, overcoupling being used to broaden the selectivity curve and undercoupling to sharpen it (§ 2-11).

Selectivity — The over-all selectivity of the i.f. amplifier will depend on the frequency and the number of stages. The following figures are indicative of the band-widths (§ 7-2) to be expected with good-quality transformers in amplifiers so constructed as to keep regeneration to a minimum:

	Band-width in kilocycles		
Intermediate frequency	*2 times down*	*10 times down*	*100 times down*
One stage, 455 kc. (air core) . . .	8.7	17.8	32.3
One stage, 455 kc. (iron core) . .	4.3	10.3	20.4
Two stages, 455 kc. (iron core) .	2.9	6.4	10.8
Two stages, 1600 kc.	11.0	16.6	27.4
Two stages, 5000 kc.	25.8	46.0	100.0

Tubes for i.f. amplifiers — Variable-μ pentodes (§ 3-5) are almost invariably used in i.f. amplifier stages, since grid-bias gain control (§ 7-6) is practically always applied to the i.f. amplifier. Tubes with high plate resistance will have least effect on the selectivity of the amplifier, and those with high mutual conductance will give greatest gain. The choice of i.f. tubes has practically no effect on the signal-to-noise ratio, since this is determined by the preceding mixer and r.f. amplifier (if the latter is used).

When single-ended tubes (§ 3-5) are used, care should be taken to keep the plate and grid leads well separated. With these tubes it is advisable to mount the screen by-pass condenser directly on the bottom of the socket, cross-wise between the plate and grid pins, to provide additional shielding. The outside foil of the condenser should be connected to ground.

Single-signal effect — In heterodyne c.w. reception with a superheterodyne receiver, the beat oscillator is set to give a suitable audio-frequency beat note when the incoming signal is converted to the intermediate frequency. For example, the beat oscillator may be set to 456 kc. (the i.f. being 455 kc.) to give a 1000-cycle beat note. Now, if an interfering signal appears at 457 kc., it will also be heterodyned by the beat oscillator to produce a 1000-cycle beat. This *audio-frequency image* corresponds to the high-frequency images already discussed (§ 7-8). It can be reduced by providing enough i.f. selectivity, since the image signal is off the peak of the i.f. resonance curve.

When this is done, tuning through a given signal will show a strong response at the desired beat note on one side of zero beat only, instead of the two beat notes on either side of zero beat characteristic of less-selective reception; hence the name, "single-signal" reception.

The necessary selectivity is difficult to obtain with non-regenerative amplifiers using ordinary tuned circuits unless a very low intermediate frequency or a large number of circuits is used. In practice it is secured either by regenerative amplification or by a crystal filter.

Regeneration — Regeneration can be used to give a pronounced single-signal effect, particularly when the i.f. is 455 kc. or lower. The resonance curve of an i.f. stage at critical regeneration (just below the oscillating point) is extremely sharp, a band-width of 1 kc. at 10 times down and 5 kc. at 100 times down being obtainable in one stage. The audio-frequency image of a given signal thus can be reduced by a factor of nearly 100 for a 1000-cycle beat note (image 2000 cycles from resonance).

Regeneration is easily introduced into an i.f. amplifier by providing a small amount of capacity coupling between grid and plate. Bringing a short length of wire, connected to the grid, into the vicinity of the plate lead usually will suffice. The feed-back may be controlled by the regular cathode-resistor gain control. When the i.f. is regenerative, it is usually preferable to operate the tube at reduced gain (high bias) and depend upon the regeneration to bring the signal strength back to normal. This prevents overloading on strong signals and increases the effective selectivity.

The higher selectivity with regeneration reduces the over-all response to noise generated in the earlier stages of the receiver, just as does high selectivity produced by other means, and therefore improves the signal-to-noise ratio. The disadvantage is that the regenerative gain varies with signal strength, being less on strong signals, and the selectivity varies accordingly.

Crystal filters — The most satisfactory method of obtaining high selectivity is by the use of a piezoelectric quartz crystal as a selective filter in the i.f. amplifier (§ 2-10). Compared to a good tuned circuit, the Q of such a crystal is extremely high. The dimensions of the crystal are made such that it is resonant at the desired intermediate frequency. It is then used as a selective coupler between i.f. stages.

Fig. 724 gives a typical crystal-filter resonance curve. For single-signal reception, the audio-frequency image can be reduced by a factor of 1000 or more. Besides practically eliminating the a.f. image, the high selectivity of the crystal filter provides great discrimination against signals very close to the desired signal in frequency, and, by reducing the band-width, reduces the response of the receiver to noise both from sources external to the receiver and in the r.f. stages of the receiver itself.

Crystal filter circuits; phasing — Several crystal filter circuits are shown in Fig. 725. Those at A and B are practically identical in performance, although differing in details. The crystal is connected in a bridge circuit (§ 2-11), with the secondary side of T_1, the input transformer, balanced to ground either through a pair of condensers, C-C, (A) or by a center-tap on the secondary, L_2 (B). The bridge is completed by the crystal, X, and the *phasing condenser*, C_2, which has a maximum capacity somewhat higher than the capacity of the crystal in its holder. When C_2 is set to balance the crystal-holder capacity, the resonance curve of the crystal circuit is practically symmetrical; the crystal acts as a series-resonant circuit of very high Q and thus allows signals of the desired frequency to be fed through C_3 to L_3L_4, the output transformer. Without C_2, the holder capacity (with the crystal acting as a dielectric) would by-pass signals of undesired frequencies to the output circuit.

The phasing control has an additional function besides neutralization of the crystal-holder capacity. The holder capacity becomes a part of the crystal circuit and causes it to act as a parallel-tuned resonant circuit at a frequency

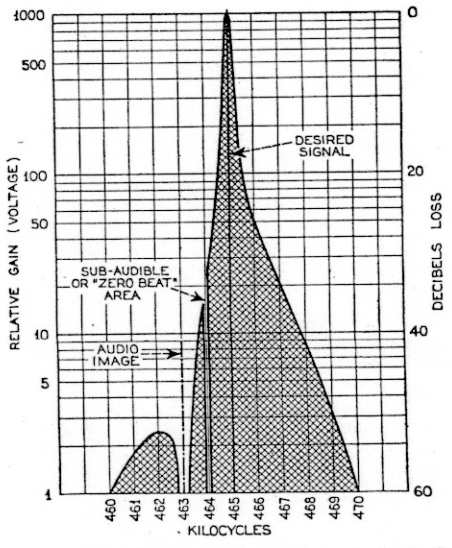

Fig. 724 — Graphical representation of single-signal selectivity. The shaded area indicates the overall band-width, or region in which response is obtainable.

slightly higher than its series-resonant frequency. Signals at the parallel-resonant frequency thus are prevented from reaching the output circuit. The phasing control, by varying the effect of the holder capacity, permits shifting the parallel-resonant frequency over a considerable range, providing adjustable rejection of interfering signals. The effect of rejection is illustrated in Fig. 724, where the audio image is reduced, by proper setting of the phasing control, far below the value that would be expected if the resonance curve were symmetrical.

Variable selectivity — In circuits such as A and B, Fig. 725, variable selectivity is obtained by adjustment of the variable input impedance, which is effectively in series with the crystal resonator. This is accomplished by varying C_1 (the *selectivity control*), which tunes the balanced secondary circuit of T_1. When the secondary is tuned to i.f. resonance the parallel impedance of the L_2C_1 combination is maximum and is purely resistive (§ 2-10).

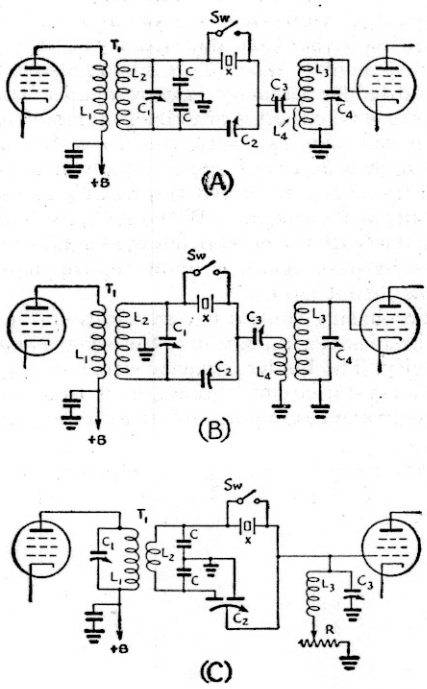

Fig. 725 — Crystal filter circuits of three types. All give variable band-width, with C having the greatest range of selectivity. Their operation is discussed in the text. Suitable circuit values are as follows: Circuit A, T_1, special i.f. input transformer with high-inductance primary, L_1, closely coupled to tuned secondary, L_2; C_1, 50-$\mu\mu$fd. variable; C, each 100-$\mu\mu$fd. fixed (mica); C_2, 10- to 15-$\mu\mu$fd. (max.) variable; C_3, 50-$\mu\mu$fd. trimmer; L_3C_4, i.f. tuned circuit, with L_3 tapped to match crystal-circuit impedance. In circuit B, T_1 is the same as in circuit A except that the secondary is center-tapped; C_1 is 100-$\mu\mu$fd. variable; C_2, C_3 and C_4, same as for circuit A; L_3L_4 is a transformer with primary, L_4, corresponding to tap on L_3 in A. In circuit C, T_1 is a special i.f. input transformer with tuned primary and low-impedance secondary; C, each 100-$\mu\mu$fd. fixed (mica); C_2, opposed stator phasing condenser, approximately 8 $\mu\mu$fd. maximum capacity each side; L_3C_3, high-Q i.f. tuned circuit; R, 0 to 3000 ohms (selectivity control).

Since the secondary circuit is center-tapped, approximately one-fourth of this resistive impedance is in series with the crystal through C_3 and L_4. This lowers the Q of the crystal circuit and makes its selectivity minimum. At the same time, the voltage applied to the crystal circuit is maximum.

When the input circuit is detuned from the crystal resonant frequency the resistance component of the input impedance decreases, and so does the total parallel impedance. Accordingly, the selectivity of the crystal circuit becomes higher and the applied voltage falls off. At first the resistance decreases faster than the applied voltage, with the result that the c.w. output from the filter *increases* as the selectivity is increased. The output falls off gradually as the input circuit is detuned further from resonance, and the selectivity becomes still higher.

In the circuits of A and B in Fig. 725, the minimum selectivity is still much greater than that of a normal two-stage 455-kc. amplifier and it is desirable to provide a wider range of selectivity, particularly for 'phone reception. A circuit which does this is shown at Fig. 725-C. The principle of operation is similar, but a much higher value of resistance can be introduced in the crystal circuit to reduce the selectivity. The output tuned circuit, L_3C_3, must have high Q. A compensated condenser is used at C_2 (phasing) to maintain circuit balance, so that the phasing control does not affect the resonant frequency. The output circuit functions as a voltage divider in such a way that the amplitude of the carrier delivered to the next grid does not vary appreciably with the selectivity setting. The variable resistor, R, may consist of a series of separate fixed resistors selected by a tap switch.

7-12 The Second Detector and Beat Oscillator

Detector circuits — The second detector of a superheterodyne receiver performs the same function as the detector in the simple receiver, but usually operates at a higher input level because of the relatively great r.f. amplification. Therefore, the ability to handle large signals without distortion is preferable to high sensitivity. Plate detection is used to some extent, but the diode detector is most popular. It is especially adapted to furnishing automatic gain or volume control (§ 7-13). The basic circuits are as described in § 7-3, although in many cases the diode elements are incorporated in a multi-purpose tube which also has an amplifier section in addition to the diode unit.

The beat oscillator — Any standard oscillator circuit (§ 3-7) may be used for the beat oscillator. Special beat-oscillator transformers are available, usually consisting of a tapped coil with adjustable tuning; these are most conveniently used with circuits such as those shown at Fig. 720-A and -B, with the output taken from Y. A variable condenser of about 25-$\mu\mu$fd. capacity may be connected between

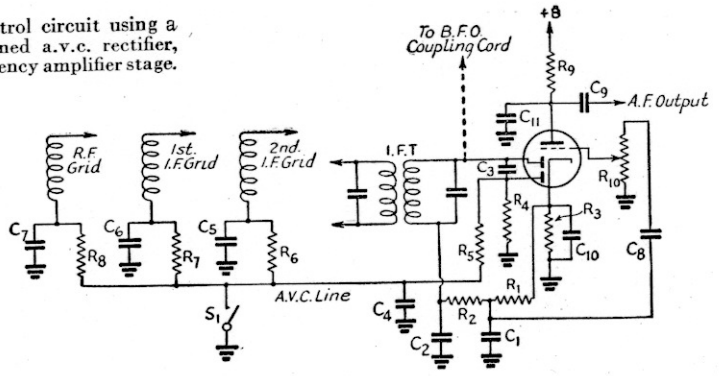

Fig. 726 — Automatic volume control circuit using a duo-diode-triode tube as a combined a.v.c. rectifier, second detector and first audio-frequency amplifier stage.

R_1 — 0.25 megohm.
R_2 — 50,000 to 250,000 ohms.
R_3 — 2000 ohms.
R_4 — 2 to 5 megohms.
R_5 — 0.5 to 1 megohm.
R_6, R_7, R_8 — 0.25 megohm.
R_9 — 0.25 megohm.
R_{10} — 0.5-megohm variable.
C_1, C_2, C_3 — 100 $\mu\mu$fd.
C_4 — 0.1 μfd.
C_5, C_6, C_7 — 0.01 μfd.
C_8, C_9 — 0.01 to 0.1 μfd.
C_{10} — 5- to 10-μfd. electrolytic.
C_{11} — 250 $\mu\mu$fd.

cathode and ground to provide fine adjustment. The beat oscillator usually is coupled to the second-detector tuned circuit through a fixed condenser of a few $\mu\mu$fd. capacity.

The beat oscillator should be well shielded, to prevent coupling to any part of the circuit except the second detector and to prevent its harmonics from getting into the front end of the receiver and being amplified like regular signals. To this end, the plate voltage should be as low as is consistent with sufficient audio-frequency output. If the beat oscillator output is too low, strong signals will not give a proportionately strong audio response.

An oscillating second detector may be used to give the audio beat note, but, since the detector must be detuned from the i.f., the selectivity and signal strength will be reduced, while blocking (§ 7-4) will be pronounced because of the high signal level at the second detector.

¶ 7-13 Automatic Volume Control

Principles — Automatic regulation of the gain of the receiver in inverse proportion to the signal strength is a great advantage, especially in 'phone reception, since it tends to keep the output level of the receiver constant regardless of input signal strength. It is readily accomplished in superheterodyne receivers by using the average rectified d.c. voltage, developed by the received signal across a resistance in a detector circuit (§ 7-3), to vary the bias on the r.f. and i.f. amplifier tubes. Since this voltage is proportional to the average amplitude of the signal, the gain is reduced as the signal strength becomes greater. The control will be more complete as the number of stages to which the a.v.c. bias is applied is increased. Control of at least two stages is advisable.

Circuits — A typical circuit using a diode-triode type tube as a combined a.v.c. rectifier, detector and first audio amplifier is shown in Fig. 726. One plate of the diode section of the tube is used for signal detection and the other for a.v.c. rectification. The a.v.c. diode plate is fed from the detector diode through the small coupling condenser, C_3. Negative bias resulting from the flow of rectified carrier current is developed across R_4, the diode load resistor. This negative bias is applied to the grids of the controlled stages through the filtering resistors (§ 2-11), R_5, R_6, R_7 and R_8. When S_1 is closed the a.v.c. line is grounded, thereby removing a.v.c. bias from the amplifier.

It does not matter which of the two diode plates is selected for audio and which for a.v.c. Frequently the two plates are connected together and used as a combined detector and a.v.c. rectifier. This could be done in Fig. 726. The a.v.c. filter and line would connect to the junction of R_2 and C_2, while C_3 and R_4 would be omitted from the circuit.

Delayed a.v.c. — In Fig. 726 the audio diode return is made directly to the cathode and the a.v.c. diode return to ground. This places negative bias on the a.v.c. diode equal to the d.c. drop through the cathode resistor (a volt or two) and thus delays the application of a.v.c. voltage to the amplifier grids, since no rectification takes place in the a.v.c. diode circuit until the carrier amplitude is large enough to overcome the bias. Without this delay the a.v.c. would start working even with a very small signal. This is undesirable, because the full amplification of the receiver then could not be realized on weak signals. In the audio diode circuit this fixed bias would cause distortion, and must be avoided; hence, the return is made directly to the cathode.

Time constant — The time constant (§ 2-6) of the resistor-condenser combinations in the a.v.c. circuit is an important part of the system. It must be high enough so that the modulation on the signal is completely filtered from the d.c. output, leaving only an average d.c. component which follows the relatively slow carrier variations with fading. Audio-frequency variations in the a.v.c. voltage applied to the amplifier grids would reduce the percentage of modulation on the incoming signal, and in practice would cause frequency distortion. On the other hand, the time constant must not be too great or the a.v.c. would be unable to follow rapid fading. The capacity and resistance values indicated in Fig. 726 give a time constant satisfactory for high-frequency reception.

Signal-strength and tuning indicators — A useful accessory to the receiver is an indicator which will show relative signal strength.

Not only is it an aid in giving reports to transmitting stations, but it is helpful also in aligning the receiver circuits, in conjunction with a test oscillator or other steady signal.

Three types of indicators are shown in Fig. 727. That at A uses an electron-ray tube (§ 3-5), several types of which are available. The grid of the triode section usually is connected to the a.v.c. line. The particular type of tube used depends upon the voltage available for its grid; where the a.v.c. voltage is large, a remote cut-off type (6G5 or 6N5) should be used in preference to the sharp cut-off type (6E5).

In B, a milliammeter is connected in series with the d.c. plate lead to one or more r.f. and i.f. tubes, the grids of which are controlled by a.v.c. voltage. Since the plate current of such tubes varies with the strength of the incoming signal, the meter will indicate relative signal intensity and may be calibrated in "S" points. The scale range of the meter should be chosen to fit the number of tubes in use; the maximum plate current of the average remote cut-off r.f. pentode is from 7 to 10 milliamperes. The shunt resistor, R, enables setting the plate current to the full-scale value ("zero adjustment"). With this system the ordinary meter reads downwards from full scale with increasing signal strength, which is the reverse of normal pointer movement (clockwise with increasing reading). Special instruments with the zero-current position of the pointer on the right-hand side of the scale are used in commercial receivers.

The system at C uses a 0–1 ma. milliammeter in a bridge circuit, arranged so that the meter reading and the signal strength increase together. The current through the branch containing R_1 should be approximately equal to the current through that containing R_2. In some manufactured receivers this is brought about by draining the screen voltage-divider current and the current to the screens of three r.f. pentodes (r.f. and i.f. stages) through R_2, the sum of these currents being about equal to the maximum plate current of one a.v.c.-controlled tube. Typical values for this type of circuit are given. The sensitivity can be increased by increasing the resistance of R_1, R_2 and R_3. The initial setting is made with the manual gain control set near maximum, when R_3 should be adjusted to make the meter read zero with no signal.

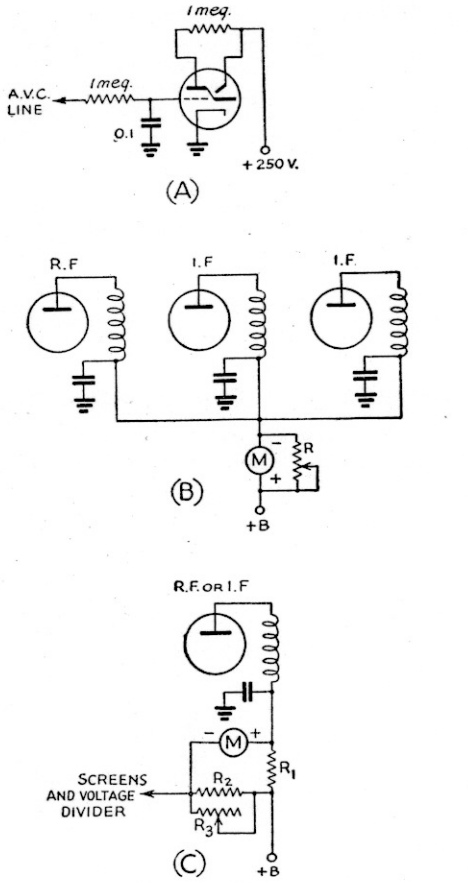

Fig. 727 — Tuning indicator or "S"-meter circuits for superhet receivers. A, electron-ray indicator; B, plate-current meter for tubes on a.v.c.; C, bridge circuit for a.v.c.-controlled tube. In B, resistor R should have a maximum resistance several times that of the milliammeter. In C, representative values for the components are: R_1, 250 ohms; R_2, 350 ohms; R_3, 1000-ohm variable.

7-14 Preselection

Purpose — Preselection is added signal-frequency selectivity incorporated before the mixer stage is reached. An r.f. amplifier preceding the mixer generally is called a *preselector*, its purpose, in part at least, being to discriminate in favor of the signal against the image. The preselector may consist of one or more r.f. amplifier stages. When its tuning control is ganged with those of the mixer and oscillator, its circuits must track with the mixer circuit.

The circuit is the same as discussed earlier (§ 7-6). An external preselector stage may be used with receivers having inadequate image ratios. In this case it is built as a separate unit, often with a tuned output circuit which gives a further improvement in selectivity. The output circuit usually is link-coupled (§ 2-11) to the receiver.

Signal/noise ratio — An r.f. amplifier will have a better signal-to-noise ratio (§ 7-2) than a mixer because the gain is higher and because the mixer-tube electrode arrangement results in higher internal tube noise than does the ordinary pentode structure. Hence, a preselector is advantageous in increasing the signal-to-noise ratio over that obtainable when the mixer is fed directly from the antenna.

Image suppression — The image ratios (§ 7-8) obtainable at frequencies up to and including 7 Mc. with a single preselector stage are high enough, when the intermediate frequency is 455 kc., so that for all practical purposes there is no appreciable image response. Average image ratios on 14 Mc. and 28 Mc. are 50–75 and 10–15, respectively. This is the overall selectivity of the r.f. and mixer tuned cir-

cuits. A second preselector stage, adding another tuned circuit, will increase the ratios to several hundred at 14 Mc. and to 30–40 at 28 Mc.

On very-high frequencies, it is impracticable to attempt to secure a good image ratio with a 455-kc. i.f. Good performance can be secured only by using a high i.f. or a double superheterodyne (§ 7-8) with a high-frequency first i.f.

Regeneration — Regeneration may be used in a preselector stage to increase both gain and selectivity. Since its use makes tuning more critical and increases ganging problems, regeneration is seldom employed except at 14 Mc. and above, where adequate image suppression is difficult to obtain with non-regenerative circuits. The same disadvantages exist as in the case of a regenerative i.f. amplifier (§ 7-11). The effect of regeneration is roughly equivalent to adding another non-regenerative preselector stage.

Regeneration may be introduced by the same method as used in regenerative i.f. amplifiers (§ 7-11). The manual gain control of the stage will serve as a volume control.

Regeneration in a preselector does not improve the signal-to-noise ratio, since the tube noise is fed back to the grid circuit along with the signal to add to the thermal-agitation noise originally present. This noise also is amplified.

¶ 7-15 Noise Reduction

Types of noise — In addition to tube and circuit noise (§ 7-6), much of the noise interference experienced in reception of high-frequency signals is caused by domestic electrical equipment and by automobile ignition systems. The interference is of two types in its effects. The first is the "hiss" type, consisting of overlapping pulses similar in nature to the receiver noise. It is largely reduced by high selectivity in the receiver, especially for code reception. The second is the "pistol-shot" or "machine-gun" type, consisting of separated impulses of high amplitude. The "hiss" type of interference usually is caused by commutator sparking in d.c. and series-wound a.c. motors, while the "shot" type results from separated spark discharges (a.c. power leaks, switch and key clicks, ignition sparks, and the like).

Impulse noise — Impulse noise, because of the extremely short duration of the pulses as compared to the time between them, must have high pulse amplitude to contain much average energy. Hence, noise of this type strong enough to cause much interference generally has an instantaneous amplitude much higher than that of the signal being received. The general principle of devices intended to reduce such noise is that of allowing the signal amplitude to pass through the receiver unaffected, but making the receiver inoperative for amplitudes greater than that of the signal. The greater the amplitude of the pulse compared to its time of duration, the more successful the noise reduction, since more of the energy can be suppressed.

In passing through selective receiver circuits, the time duration of the impulses is increased, because of the Q or flywheel effect (§ 2-10) of the circuits. Hence, the more selectivity ahead of the noise-reducing device, the more difficult it becomes to secure good noise suppression.

Audio limiting — A considerable degree of noise reduction in code reception can be accomplished by amplitude-limiting arrangements applied to the audio output circuit of a receiver. Such limiters also maintain the signal output nearly constant with fading. Diagrams of typical output-limiter circuits are shown in Fig. 728. Circuit A employs a triode tube operated at reduced plate voltage (approximately 10 volts), so that it saturates at a low signal level. The arrangement of B has better limiting characteristics. A pentode audio tube is operated at reduced screen voltage (35 volts or so), so that the output power remains practically constant over a grid excitation-voltage range of more than 100 to 1. These output-limiter systems are simple, and adaptable to most receivers. However, they cannot prevent noise peaks from overloading previous circuits.

Second-detector circuits — The circuit of Fig. 729 "chops" noise peaks at the second detector of a superhet receiver by means of a biased diode, which becomes non-conducting above a predetermined signal level. The audio output of the detector must pass through the diode to the grid of the amplifier tube. The diode normally would be non-conducting with the connections shown were it not for the fact that it is given positive bias from a 30-volt source through the adjustable potentiometer, R_3. Resistors R_1 and R_2 must be fairly large in value to prevent loss of audio signal.

The audio signal from the detector can be considered to modulate (§ 5-1) the steady diode current, and conduction will take place so long as the diode plate is positive with respect to the cathode. When the signal is sufficiently large to swing the cathode positive with respect to the plate, however, conduction ceases, and that portion of the signal is cut off from the audio amplifier. The point at which cut-off occurs can be selected by adjustment of

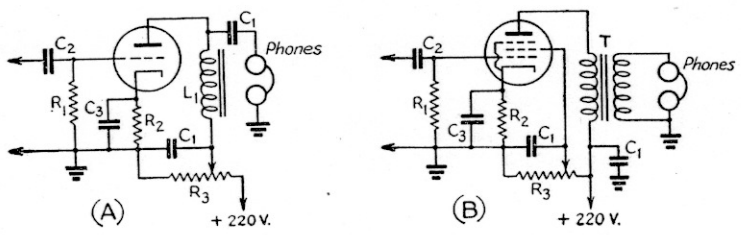

Fig. 728 — Audio output-limiting noise-reducing circuits.
C_1 — 0.25 μfd.
C_2 — 0.01 μfd.
C_3 — 5 μfd.
R_1 — 0.5 megohm.
R_2 — 2000 ohms.
R_3 — 50,000-ohm potentiometer.
T — Output transformer.
L_1 — 15-henry choke.

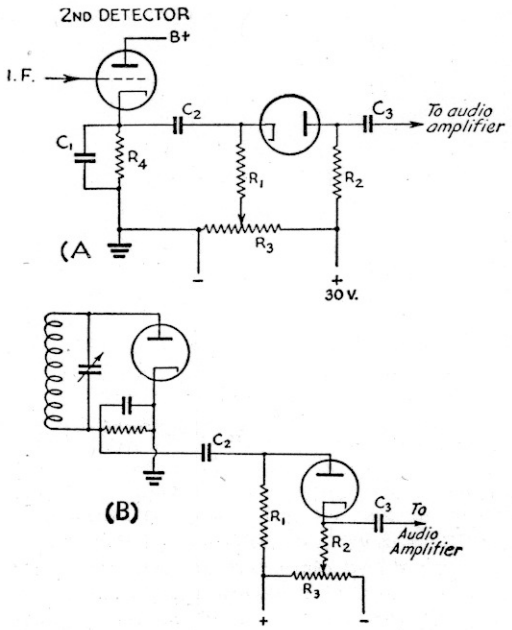

Fig. 729—Series-valve noise-limiter circuits. A, as used with an infinite-impedance detector; B, with a diode detector. Typical values for components are as follows:

R_1 — 0.25 megohm.	R_4 — 20,000 to 50,000 ohms.
R_2 — 50,000 ohms.	C_1 — 250 $\mu\mu$fd.
R_3 — 10,000-ohms.	C_2, C_3 — 0.1 μfd.

All other diode-circuit constants in B are conventional.

R_3. By setting R_3 so that the signal just passes through the "valve," noise pulses higher in amplitude than the signal will be cut off. The circuit of Fig 729-A, using an infinite-impedance detector (§ 7-3), gives a positive voltage on rectification. When the rectified voltage is negative, as it is from the usual diode detector (§ 7-3), the circuit arrangement shown in Fig. 729-B must be used.

An audio signal of about ten volts is required for good limiting action. When a beat oscillator is used for c.w. reception the b.f.o. voltage should be small, so that incoming noise will not have a strong carrier to beat against and so produce large audio output.

A second-detector noise-limiting circuit which automatically adjusts itself to the received carrier level is shown in Fig. 730. The diode load circuit (§ 7-3) consists of R_6, R_7, R_8 (shunted by the high-resistance audio volume control, R_4) and R_5 in series. The cathode of the 6N7 noise limiter is tapped on the load resistor at a point such that the average rectified carrier voltage (negative) at its grid is approximately twice the negative voltage at the cathode, both measured with reference to ground. A filter network, R_1C_1, is inserted in the grid circuit, so that the audio modulation on the carrier does not reach the grid; hence, the grid potential is maintained at substantially the rectified carrier voltage alone. The cathode, however, is free to follow the modulation, and when the modulation is 100 per cent the peak cathode voltage will just equal the steady grid voltage.

At all modulation percentages below 100 per cent the grid is negative with respect to cathode, and current cannot flow in the 6N7 plate-cathode circuit. A noise pulse exceeding the peak voltage which represents 100 per cent modulation will, however, make the grid positive with respect to cathode. The relatively low plate-cathode resistance of the 6N7 then shunts the high-resistance audio output circuit, effectively short-circuiting it, so that there is practically no response for the duration of the noise peak over the 100 per cent modulation limit.

R_5 is used to make the noise-limiting tube more sensitive by applying to the plate an audio voltage out of phase with the cathode voltage, so that, at the instant the grid goes positive with respect to cathode, the highest positive potential also is applied to the plate, thus further lowering the effective plate-cathode resistance.

I.f. noise silencer — In the circuit shown in Fig. 731, noise pulses are made to decrease the gain of an i.f. stage momentarily and thus silence the receiver for the duration of the pulse. Any noise voltage in excess of the desired signal's maximum i.f. voltage is taken off at the grid of the i.f. amplifier, amplified by the noise amplifier stage, and rectified by the full-wave diode noise rectifier. The noise circuits are tuned to the i.f. The rectified noise voltage is applied as a pulse of negative bias to the No. 3 grid of the 6L7 i.f. amplifier, wholly or partially disabling this stage for the duration of the individual noise pulse, depending on the amplitude of the noise voltage. The noise amplifier-rectifier circuit is biased by means of the "threshold control," R_2, so that rectification will not start until the noise voltage exceeds the desired-signal amplitude. For reception with automatic volume control, the a.v.c. voltage can be applied to the grid of the noise amplifier, to augment this threshold bias. This system of noise silencing gives a signal-to-noise ratio improvement of the order of 30 db. (power ratio of 1000) with heavy ignition interference, raising the signal-to-noise ratio from — 10 db. without the silencer to + 20 db. with the silencer in a typical instance.

Circuit values are normal for i.f. amplifiers (§ 7-11), except as indicated. The noise-rectifier transformer, T_1, has an untuned secondary closely coupled to the primary and center-tapped for full-wave rectification. The center-tap rectifier (§ 8-3) is used to reduce the possibility of r.f. feed-back into the i.f. amplifier (noise-silencer) stage. The time constant (§ 2-6) of the noise-rectifier load circuit, $R_1C_1C_2$, must be small, to prevent disabling the noise-silencer stage for a longer period than the duration of the noise pulse. The r.f. choke, RFC, must be effective at the intermediate frequency.

Adequate shielding and isolation of the noise-amplifier and rectifier circuits from the noise-silencer stage must be provided to prevent

possible self-oscillation and instability. This circuit should be applied to the first i.f. stage of the receiver, before the high-selectivity circuits are reached, and is most effective when the signal and noise levels are fairly high (one or two r.f. stages before the mixer) since several volts must be obtained from the noise rectifier for good silencing.

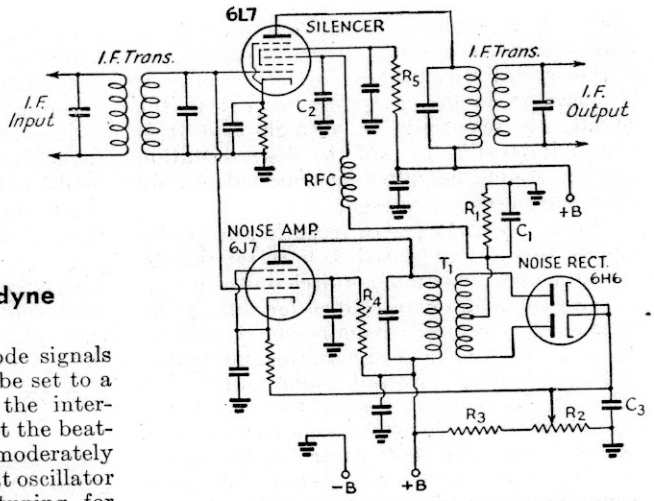

Fig. 731 — I.f. noise-silencing circuit. The plate supply should be 250 volts. Typical values for components are:
C_1 — 50–250 $\mu\mu$fd. (use smallest value possible without r.f. feedback).
C_2 — 50 $\mu\mu$fd.
C_3 — 0.1 μfd.
R_1 — 0.1 megohm.
R_2 — 5000-ohm variable.
R_3 — 20,000 ohms.
R_4, R_5 — 0.1 megohm.
T_1 — Special i.f. transformer for noise rectifier.

¶ 7-16 Operating Superheterodyne Receivers

C.w. reception — For making code signals audible, the beat oscillator should be set to a frequency slightly different from the intermediate frequency (§ 7-8). To adjust the beat-oscillator frequency, first tune in a moderately weak but steady carrier with the beat oscillator turned off. Adjust the receiver tuning for maximum signal strength, as indicated by maximum hiss. Then turn on the beat oscillator and adjust its frequency (leaving the receiver tuning unchanged) to give a suitable beat note. The beat oscillator need not subsequently be touched, except for occasional checking to make certain the frequency has not drifted from the initial setting. The b.f.o. may be set on either the high- or low-frequency side of zero beat.

The use of a.v.c. (§ 7-13) is not generally satisfactory in c.w. reception because the receiver gain rises in the spaces between the dots and dashes, giving an increase in noise in the same intervals, and because the rectified beat-oscillator voltage in the second detector circuit also operates the a.v.c. circuit. This gives a constant reduction in gain and prevents utilization of the full sensitivity of the receiver.

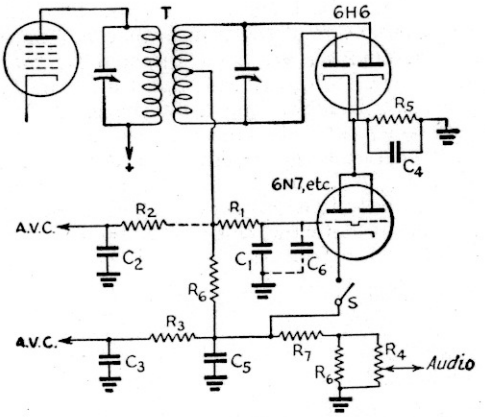

Fig. 730 — Automatic noise-limiter for superheterodynes.
T — I.f. transformer with a balanced secondary for working into a diode rectifier.
R_1, R_2, R_3 — 1 megohm.
R_4 — 1-megohm variable.
R_5 — 250,000 ohms.
R_6, R_8 — 100,000 ohms.
R_7 — 25,000 ohms.
Sw — S.p.s.t. toggle (on-off switch).
C_1 — 0.1-μfd. paper.
C_2, C_3 — 0.05-μfd. paper.
C_4, C_5 — 50-$\mu\mu$fd. mica.
C_6 — 0.001-μfd. mica (for r.f. filtering, if needed).
The switch should be mounted close to the circuit elements and controlled by an extension shaft if necessary.

Hence, the gain preferably should be manually adjusted to give suitable audio-frequency output.

To avoid overloading in the i.f. circuits, it is usually better to control the i.f. and r.f. gain and keep the audio gain at a fixed value than to use the a.f. gain control as a volume control and leave the r.f. gain fixed at its highest level.

Tuning with the crystal filter — If the receiver is equipped with a crystal filter the tuning instructions in the preceding paragraph still apply, but more care must be used both in the initial adjustment of the beat oscillator and in tuning. The beat oscillator is set as described above, but with the crystal filter in operation and adjusted to its sharpest position, if variable selectivity is available. The initial adjustment should be made with the phasing control (§ 7-11) in the intermediate position. After it is completed, the beat oscillator should be left set and the receiver tuned to the other side of zero beat (audio-frequency image) on the same carrier to give a beat note of the same tone. This beat will be considerably weaker than the first, and may be "phased out" almost completely by careful adjustment of the phasing control. This is the adjustment for normal operation; it will be found that one side of zero beat has practically disappeared, leaving maximum response on the desired side.

An interfering signal having a beat note differing from that of the a.f. image can be similarly phased out, provided its carrier frequency is not too near the desired carrier.

Depending upon the filter design, maximum selectivity may cause the dots and dashes to lengthen out so that they seem to "run together." This, plus the fact that tuning is quite critical with extremely high selectivity, may make it desirable to use somewhat less

selectivity in ordinary operation. However, it must be emphasized that, to realize the benefits of the crystal filter in reducing interference, it is necessary to do *all* tuning with it in the circuit. Its selectivity is so high that it is almost impossible to find the desired station quickly, should the filter be switched in only when interference is present.

'Phone reception — In reception of 'phone signals, the normal procedure is to set the r.f. and i.f. gain at maximum, switch on the a.v.c., and use the audio gain control for setting the volume. This insures maximum effectiveness of the a.v.c. system in compensating for fading and maintaining constant audio output on either strong or weak signals. On occasion a strong signal close to the frequency of a weaker desired station may take control of the a.v.c., in which case the weaker station will practically disappear because of the reduced gain. In this case better reception may result if the a.v.c. is switched off, using the manual r.f. gain control to set the gain at a point which prevents "blocking" by the stronger signal.

A crystal filter will do much toward reducing interference in 'phone reception. Although the high selectivity cuts sidebands (§ 7-11) and thereby reduces the audio output, especially at the higher audio frequencies, it is possible to use quite high selectivity without destroying intelligibility even though the "quality" of the transmission may suffer. As in the case of c.w. reception, it is advisable to do all tuning with the filter in the circuit. Variable-selectivity filters permit a choice of selectivity to suit interference conditions.

An undesired carrier close in frequency to a desired carrier will heterodyne with it to produce a beat note equal to the frequency difference. Such a heterodyne can be reduced by adjustment of the phasing control in the crystal filter. It cannot be prevented in a "straight" superheterodyne having no crystal filter.

A tone control often will be of help in reducing the effects of high-pitched heterodynes, sideband splatter (§ 5-2) and noise, by cutting off the higher audio frequencies. This, like sideband cutting with high selectivity, causes some reduction in naturalness.

Spurious responses — Spurious responses can be recognized without a great deal of difficulty. Often it is possible to identify an image by the nature of the transmitting station, if the frequency assignments applying to the frequency to which the receiver is tuned are known. However, an image also can be recognized by its behavior with tuning. If the signal causes a heterodyne beat note with the desired signal and is actually on the same frequency, the beat note will not change as the receiver is tuned through the signal; but if the interfering signal is an image, the beat will vary in pitch as the receiver is tuned. The beat oscillator in the receiver must be turned off for this test. Using a crystal filter with the beat oscillator on, an image will peak on the side of zero beat opposite that on which the desired signal peaks.

Harmonic response can be recognized by the "tuning rate," or movement of the tuning dial required to give a specified change in beat note. Signals getting into the i.f. via high-frequency oscillator harmonics tune more rapidly (less dial movement) through a given change in beat note than do signals received by normal means.

Harmonics of the beat oscillator can be recognized by the tuning rate of the beat-oscillator pitch control. A smaller movement of the control will suffice for a given change in beat note than is necessary with legitimate signals.

7-17 Servicing Superheterodyne Receivers

I.f. alignment — A calibrated signal generator or test oscillator is a practical necessity for initial alignment of an i.f. amplifier. Some means for measuring the output of the receiver also is needed. If the receiver has a tuning meter, its indications will serve for this purpose. Alternatively, if the signal generator is of the modulated type, an a.c. output meter (high-resistance voltmeter with copper-oxide rectifier) can be connected across the primary of the output transformer, or from the plate of the last audio amplifier through a 0.1-μfd. blocking condenser (§ 2-13) to the receiver chassis. The intensity of sound from the loudspeaker can be judged by ear, if no output meter is available, but this method is not as accurate as those using instruments.

The procedure is as follows: The test oscillator is adjusted to the desired intermediate frequency, and the "hot" or ungrounded output lead is clipped on the grid terminal of the last i.f. amplifier tube. The grounded lead is connected to the receiver chassis. The trimmer condensers of the transformer feeding the second detector are then adjusted for maximum signal output. The hot lead from the generator is next clipped on the grid of the next-to-last i.f. tube, and the second from last i.f. transformer is brought into alignment by adjusting its trimmers for maximum output. This process is continued, working back from the second detector, until all of the i.f. transformers have been aligned. It will be necessary to reduce the output of the signal generator as more of the i.f. amplifier is brought into use, because the increased gain otherwise may cause overloading and consequent inaccurate results. It is desirable always to use the minimum signal strength which gives useful output readings.

The i.f. transformer in the plate circuit of the mixer is aligned with the signal-generator output lead connected to the mixer grid. Since the tuned circuit feeding the mixer grid is tuned to a considerably higher frequency, it can effectively short-circuit the signal-generator output, and therefore it may be necessary to disconnect this circuit. With tubes having a top grid-cap connection, this can be done by simply removing the grid clip from the tube cap.

If the tuning indicator is used as an output meter the a.v.c. should be on; if the audio-output method is used, the a.v.c. should be off. The beat oscillator should be off in either case.

If the i.f. amplifier has a crystal filter, the filter should be switched out. Alignment is then carried out as described above, setting the signal generator as closely as possible to the frequency of the crystal. After alignment, the crystal should be switched in and the oscillator frequency varied back and forth over a small range either side of the crystal frequency to find its exact frequency, which will be indicated by a sharp rise in output. Leaving the signal generator set on the crystal peak, the i.f. trimmers may be realigned for maximum output. The necessary readjustment should be small. The signal generator frequency should be checked frequently, to make sure it has not drifted from the crystal peak.

A modulated signal is not of much value for aligning a crystal-filter i.f. amplifier, since the high selectivity cuts sidebands and the results may be inaccurate if the audio output of the receiver is used as a criterion of alignment. Lacking an a.v.c. tuning meter the transformers may be aligned by ear, using a weak unmodulated signal adjusted to the crystal peak. Switch on the beat oscillator, adjust to a suitable tone, and align the transformers for maximum audio output.

An amplifier which is only slightly out of alignment, as a result of normal drift from temperature, humidity or aging effects, can be realigned by using any steady signal, such as a local broadcasting station, in lieu of a test oscillator. Allow the receiver to warm up thoroughly (an hour or so), tune in the signal as usual, and "touch up" the i.f. trimmers for maximum output.

R.f. alignment — The objective in aligning the r.f. circuits in a gang-tuned receiver is to secure adequate tracking over each tuning range. The adjustment may be carried out with a test oscillator of suitable frequency range, or even on noise or such signals as may be heard. First set the tuning dial at the high-frequency end of the range in use. Then set the test oscillator to the frequency indicated by the receiver dial. The test-oscillator output may be connected to the antenna terminals of the receiver for this test. Adjust the oscillator trimmer condenser in the receiver to give maximum response on the test-oscillator signal, then reset the receiver dial to the low-frequency end of the range. Set the test-oscillator frequency near the frequency indicated by the receiver dial and carefully tune the test oscillator until its signal is heard in the receiver. If the frequency of the signal as indicated by the test-oscillator calibration is higher than that indicated by the receiver dial, more inductance (or more capacity in the tracking condenser) is needed in the receiver oscillator circuit; if the frequency is lower, less inductance (less tracking capacity) is required in the receiver oscillator. Most commercial receivers provide some means for varying the inductances of the coils or the capacity of the tracking condenser, to permit aligning the receiver tuning with the dial calibration. Set the test oscillator to the frequency indicated by the receiver dial, and then adjust the tracking capacity or inductance of the receiver oscillator coil to obtain maximum response. After making this adjustment, recheck the high-frequency end of the scale as previously described. It may be necessary to go back and forth between the ends of the range several times before the proper combination of inductance and capacity is secured. In many cases, better over-all tracking will result if frequencies near but not actually at the ends of the tuning range are selected, instead of taking the extreme dial settings.

After the oscillator range is properly adjusted, set the receiver and test oscillator to the high-frequency end of the range. Adjust the mixer trimmer condenser for maximum hiss or signal, then the r.f. trimmers. Reset the tuning dial and test oscillator to the low-frequency end of the range, and repeat; if the circuits are properly designed, no change in trimmer settings should be necessary. If it is necessary to increase the trimmer capacity in any circuit, more inductance is needed; if less capacity resonates the circuit, less inductance is required.

Tracking seldom is perfect throughout a tuning range, so that a check of alignment at intermediate points in the range may show it to be slightly off. Normally the gain variation from this cause will be small, however, and it will suffice to bring the circuits into line at both ends of the range. If most reception is in a particular part of the range, such as an amateur band, the circuits may be aligned for maximum performance in that region, even though the ends of the frequency range as a whole may be slightly out of alignment.

Oscillation in r.f. or i.f. amplifiers — Oscillation in high-frequency amplifier and mixer circuits may be evidenced by squeals or "birdies" as the tuning is varied, or by complete lack of audible output if the oscillation is strong enough to cause the a.v.c. system to reduce the receiver gain drastically. Oscillation can be caused by poor connections in the common ground circuits, especially to the tuning-condenser rotors. Inadequate or defective by-pass condensers in cathode, plate and screen-grid circuits also can cause such oscillation. In some cases it may be advisable to provide a shield between the stators of pre-r.f. amplifier and first-detector ganged tuning condensers, in addition to the usual tube and interstage shielding. A metal tube with an ungrounded shell will cause trouble. Improper screen-grid voltage, resulting from a shorted or too-low screen-grid series resistor, also may be responsible.

Oscillation in the i.f. circuits is independent of high-frequency tuning, and is indicated by a continuous squeal which appears when the gain is advanced with the c.w. beat oscillator

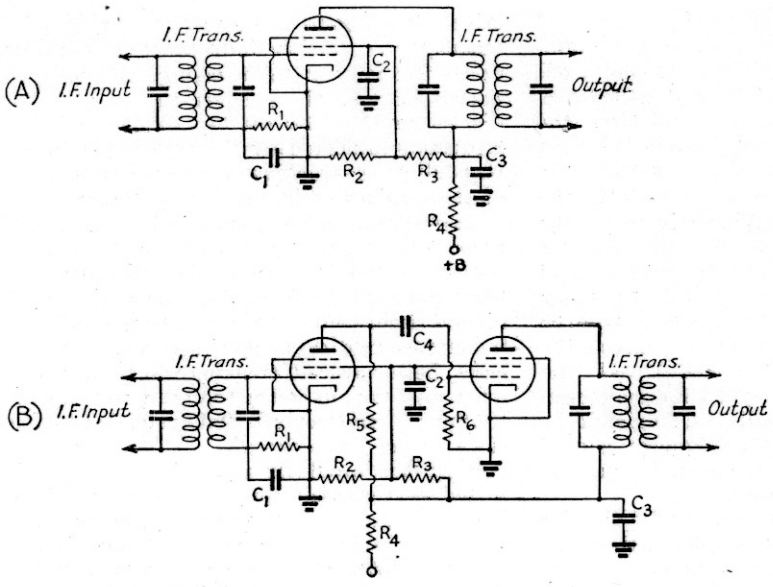

Fig. 732 — F.m. limiter circuits. A, single-tube plate-saturation limiter; B, cascade limiter. Typical values are:

	Circuit A	*Circuit B*
C_1 —	100 $\mu\mu$fd.	100 $\mu\mu$fd.
C_2, C_3 —	0.1 μfd.	0.1 μfd.
C_4 —		250 $\mu\mu$fd.
R_1 —	0.1 megohm.	50,000 ohms.
R_2 —	2000 ohms.	2000 ohms.
R_3 —	50,000 ohms.	50,000 ohms.
R_4 —	0 to 50,000 ohms.	0 to 50,000 ohms.
R_5 —		4000 ohms.
R_6 —		0.2 megohm.

Plate-supply voltage should be 250 volts in both circuits.

on. It can result from similar defects in i.f. amplifier circuits. Inadequate cathode by-pass capacitance is a common cause of such oscillation. An additional by-pass condenser of 0.1 to 0.25 μfd. usually will remedy it. Similar treatment can be applied to the screen-grid and plate by-passes of i.f. tubes.

Instability — "Birdies" or a mushy hiss occurring with tuning of the high-frequency oscillator may indicate that the oscillator is "squegging" or oscillating simultaneously at high and low frequencies (§ 7-4). This may be caused by a defective tube, too-high oscillator plate or screen-grid voltage, excessive feedback, or too-high grid-leak resistance.

A varying beat note in c.w. reception indicates instability in either the h.f. oscillator or beat oscillator, usually the former. The stability of the beat oscillator can be checked by introducing a signal of intermediate frequency (from a test oscillator) into the i.f. amplifier; if the beat note is unstable, the trouble is in the beat oscillator. Poor connections or defective parts are the likely cause. Instability in the high-frequency oscillator may be the result of poor circuit design (§ 7-10), loose connections, defective tubes or circuit components, or poor voltage regulation in the oscillator plate and/or screen supply circuits. Mixer pulling of the oscillator circuit (§ 7-9) also will cause the beat-note to "chirp" on strong c.w. signals, because the oscillator load changes slightly under these conditions.

In 'phone reception with a.v.c., a peculiar type of instability ("motorboating") may appear if the h.f. oscillator frequency is sensitive to changes in plate voltage. As the a.v.c. voltage rises the electrode currents of the controlled tubes decrease, decreasing the load on the power supply and causing its output voltage to rise. Since this increases the voltage applied to the oscillator, its frequency changes correspondingly, throwing the signal off the peak of the i.f. resonance curve and reducing the a.v.c. voltage, thus tending to restore the original conditions. The process then repeats itself, at a rate determined by the signal strength and the time constant of the power-supply circuits. This effect is most pronounced with high i.f. selectivity, as when a crystal filter is used, and can be cured by designing the oscillator circuit to be relatively insensitive to plate voltage changes and by regulating the voltage applied to the oscillator (§ 7-10).

¶ 7-18 Reception of Frequency-Modulated Signals

F.m. receivers — A frequency-modulation receiver differs in circuit design from one designed for amplitude modulation chiefly in the arrangement used for detecting the signal. Detectors for amplitude-modulated signals do not respond to frequency modulation. It is also necessary, for full realization of the noise-reducing benefits of the f.m. system, that the signal applied to the detector be completely free from amplitude modulation. In practice, this is attained by preventing the signal from rising above a given amplitude by means of a limiter (§ 7-15). Since the weakest signal must be amplitude-limited, high gain must be provided ahead of the limiter; the superheterodyne type of circuit almost invariably is used to provide the necessary gain.

The r.f. and i.f. stages in a superheterodyne for f.m. reception are practically identical in circuit arrangement with those in an a.m. receiver. Since the use of f.m. is confined to the very-high frequencies (above 28 Mc.) a high intermediate frequency is employed, usually between 4 and 5 Mc. This not only reduces image response but also provides the greater band-width necessary to accommodate wide-band frequency-modulated signals.

Receiver requirements — The primary requirements are sufficient r.f. and i.f. gain to "saturate" the limiter even with a weak signal, sufficient band-width (§ 7-2) to accommodate the full frequency deviation either side of the carrier frequency without undue attenuation at the edges of the band, a limiter circuit which functions properly on both rapid and slow variations in amplitude, and a detector which gives a linear relationship between frequency deviation and *amplitude* output. The audio circuits are the same as in other receivers (§ 7-5), except that it is desirable to cut off the upper audio range by a low-pass filter (§ 2-11) because higher-frequency noise components have the greatest amplitude in an f.m. receiver.

The limiter — Limiter circuits generally are of the plate-saturation type (§ 7-15), where low plate and screen voltage are used to limit the plate-current flow at high signal amplitudes. Fig. 732-A is a typical circuit. The tube is self-biased (§ 3-6) by a grid leak, R_1, and condenser, C_1. R_2, R_3 and R_4 form a voltage divider (§ 8-10) which puts the desired voltages on the screen and plate. The lower the voltages the lower the signal level at which limiting occurs, but the r.f. output voltage of the limiter also is lower. C_2 and C_3 are the plate and screen by-pass condensers, of conventional value for the intermediate frequency used. The time constant (§ 2-6) of R_1C_1 determines the behavior of the limiter with respect to rapid and slow amplitude variations. For best operation on impulse noise (§ 7-15) the time constant should be small, but a small time constant limits the range of signal strengths the limiter can handle without departing from the constant-output condition. A larger time constant is better in the latter respect but is not so effective for rapid variations, hence compromise constants must be used.

The cascade limiter, Fig. 732-B, overcomes this by making the time constant in the first grid circuit suitable for effective operation on impulse noise, and that in the second grid (C_4R_6) optimum for a wide range of input signal strengths. This results, in addition, in more constant output over a very wide range of input signal amplitudes because the voltage at the grid of the second stage already is partially amplitude-limited, thus giving the second stage less work to do. Resistance coupling ($R_5C_4R_6$) is used in preference to transformer coupling for simplicity and to prevent unwanted regeneration, additional gain at this point being unnecessary.

The rectified voltage developed across R_1 in either circuit may be used for a.v.c. (§ 7-13).

Discriminator circuits and operation — The f.m. detector commonly is called a *discriminator*, because of its ability to discriminate between frequency deviations above and those below the carrier frequency. The circuit generally used is shown in Fig. 733-A. A special i.f. coupling transformer is used between the limiter and detector. Its secondary, L_1, is center-tapped and is connected back to the plate side of the primary circuit, which otherwise is conventional. C_4 is the tuning condenser. The load circuits of the two diode rectifiers (R_1C_1, R_2C_2) are connected in series; the constants are the same as in ordinary diode detector circuits (§ 7-3). The audio output is taken from across the two load resistances.

The primary and secondary circuits are both adjusted to resonance in the center of the i.f. pass-band. The voltage applied to the rectifiers consists of two components, that induced in the secondary by the inductive coupling and that fed to the center of the secondary through C_2. The phase relations between the two are such that at resonance the rectified load currents are equal in amplitude but flow in opposite directions through R_1 and R_2, hence the net voltage across the terminals marked "audio output" is zero. When the carrier deviates from resonance the induced secondary current either lags or leads, depending upon whether the deviation is to the high- or low-frequency side, and this phase shift causes the induced current to combine with that fed through C_2 in such a way that one diode gets more voltage than the other when the frequency is below resonance, while the second diode gets the larger voltage when the frequency is higher than resonance. The voltage appearing across the output terminals is the difference between the two diode voltages. Thus a characteristic like that of Fig. 734 results, where the net rectified output voltage has opposite polarity

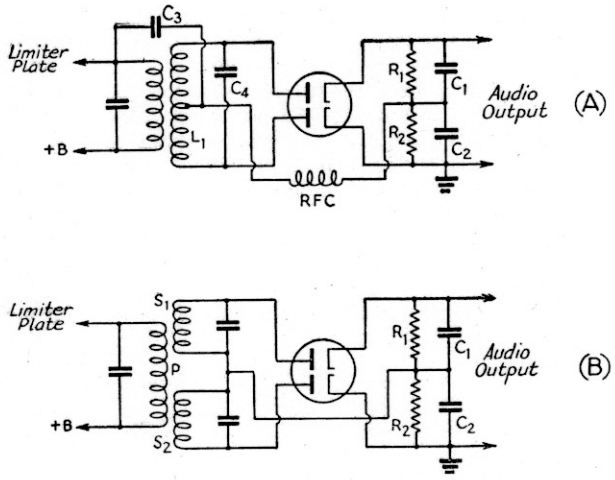

Fig. 733 — F.m. discriminator circuits. In both circuits typical values for C_1 and C_2 are 100 $\mu\mu$fd. each; R_1 and R_2, 0.1 megohm each. C_3 in A is approximately 50 $\mu\mu$fd., depending upon the intermediate frequency; *RFC* should be of a type designed for the i.f. in use (2.5 mh. is satisfactory for i.f.s of 4 to 5 megacycles). The special three-winding transformer in B is described in the text. In either circuit the ground may be moved from the lower end of C_2 to the junction of C_1 and C_2, for push-pull audio output.

for frequencies on either side of resonance, and up to a certain point becomes greater in amplitude as the frequency deviation is greater. The straight-line portion of the curve is the useful detector characteristic. The separation between the peaks which mark the ends of the linear portion of the curve depends upon the *Qs* of the primary and secondary circuits and the degree of coupling. The separation becomes greater with low *Qs* and close coupling. The circuit ordinarily is designed so that the peaks fall just outside the limits of the pass-band, thus utilizing most of the straight portion of the curve. Since the audio output is proportional to the change in d.c. voltage with deviation, it is advantageous from this standpoint to have the peak separation the minimum necessary for a linear characteristic.

A second type of discriminator circuit is shown in Fig. 733-B. Two secondary circuits, S_1 and S_2, are used, one tuned above the center frequency of the i.f. pass-band and the other below. They are coupled equally to the primary, which is tuned to the center frequency. As the carrier frequency deviates the voltages induced in the secondaries will change in amplitude, the larger voltage appearing across the secondary being nearer resonance with the instantaneous frequency. The detection characteristic is similar to that of the first type of discriminator. The peak separation is determined by the *Qs* of the circuits, the coefficient of coupling, and the tuning of the two secondaries. High *Qs* and loose coupling are necessary for close peak separation.

F.m. receiver alignment — Alignment of f.m. receivers up to the limiter is carried out as described in § 7-17. For output measurement, a 0–1 milliammeter or 0–500 microammeter should be connected in series with the limiter grid resistor (R_1 in Fig. 732) at the grounded end; or, if the voltage drop across R_1 is used for a.v.c. and the receiver is provided with a tuning meter (§ 7-13), the tuning meter may be used as an output meter. An accurately calibrated signal generator or test oscillator is desirable, since the i.f. should be aligned to be as symmetrical as possible; that is, the output reading should be the same for any two test oscillator settings the same number of kilocycles above or below resonance. It is not necessary to have uniform response over the whole band to be received, although the output at the edges of the band (limit of deviation (§ 5-11) of the transmitted signals) should not be less than 25 per cent of the voltage at resonance. In communications work, a band-width of 30 kc. or less (15 kc. or less deviation) is commonly used.

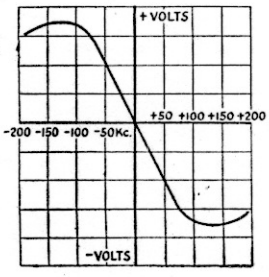

Fig. 734 — Characteristic of a typical f.m. detector. The vertical axis represents the voltage developed across the load resistor as the frequency varies from the exact resonance frequency. This detector would handle f.m. signals up to a band-width of 150 kc. over the linear portion of the curve.

Output readings should be taken with the test oscillator set at intervals of a few kilocycles either side of resonance until the band limits are reached.

After the i.f. (and front-end) alignment, the limiter operation should be checked. This can be done by temporarily disconnecting C_3, if the discriminator circuit of Fig. 733-A is used, disconnecting R_1 and C_1 on the cathode side, and inserting the milliammeter or microammeter in series with R_2 at the grounded end. This converts the discriminator to an ordinary diode rectifier. Varying the signal-generator frequency over the channel, with the discriminator transformer adjusted to resonance, should show no change in output (at the bandwidths used for communications purposes) as indicated by the rectified current read by the meter. At this point various plate and screen voltages can be tried on the limiter tube or tubes, to determine the set of conditions which gives maximum output with adequate limiting (no change in rectified current).

When the limiter has been checked the discriminator connections can be restored, leaving the meter connected in series with R_1. Provision should be made for reversing the connections to the meter terminals, to take care of the reversal in polarity of the net rectified current. Set the signal generator to the center frequency of the band and adjust the discriminator transformer trimmer condensers to resonance, which will be indicated by zero rectified current. Then set the test oscillator at the deviation limit (§ 5-11) on one side of the center frequency, and note the meter reading. Reverse the meter terminals and set the test oscillator at the deviation limit on the other side. The two readings should be the same. If they are not, they can be made so by a slight adjustment of the primary trimmer. This will necessitate rechecking the response at resonance to make sure it is still zero. Generally, the secondary trimmer will chiefly affect the zero-response frequency, while the primary trimmer will have most effect on the symmetry of the discriminator peaks. A detector curve having satisfactory linearity can be obtained by cut-and-try adjustment of both trimmers.

Tuning and operation — An f.m. receiver gives greatest noise reduction when the carrier is tuned exactly to the center of the receiver pass-band and to the point of zero response in the discriminator. Because of the decrease in noise, this point is readily recognized.

When an amplitude-modulated signal is tuned in its modulation practically disappears at exact resonance, only those nonsymmetrical modulation components which may be present being detected. If the signal is to one side or the other of resonance, however, it is capable of causing interference to an f.m. signal.

CHAPTER EIGHT

Power Supply

¶ 8-1 Power-Supply Requirements

Filament supply — Except for tubes designed for battery operation, the filaments or heaters of vacuum tubes used in both transmitters and receivers are universally operated on alternating current obtained from the power line through a step-down transformer (§ 2-9) delivering a secondary voltage equal to the rated voltage of the tubes used. The transformer should be designed to carry the current taken by the number of tubes which may be connected in parallel (§ 2-6) across it. The filament or heater transformer generally is center-tapped, to provide a balanced circuit for eliminating hum (§ 3-6).

For medium- and high-power r.f. stages of transmitters, and for high-power audio stages, it is desirable to use a separate filament transformer for each section of the transmitter, installed near the tube sockets. This avoids the necessity for abnormally large wires to carry the total filament current for all stages without appreciable voltage drop. Maintenance of rated filament voltage is highly important, especially with thoriated-filament tubes, since under- or over-voltage may reduce filament life.

Plate supply — Direct current must be used for the plates of tubes, since any variation in plate current arising from power-supply causes will be superimposed on the signal being received or transmitted, giving an undesirable type of modulation (§ 5-1) if the variations occur at an audio-frequency (§ 2-7) rate. Unvarying direct current is called *pure d.c.*, to distinguish it from current which may be unidirectional but of pulsating character. The use of pure d.c. on the plates of transmitting tubes is required by FCC regulations on all frequencies below 60 Mc.

Sources of plate power — D.c. plate power is usually obtained from rectified and filtered alternating current, but in low-power and portable installations may be secured from batteries. Dry batteries may be used for very low-power portable equipment, but in many cases a storage battery is used as the primary power source, in conjunction with an interrupter giving pulsating d.c. which is applied to the primary of a step-up transformer (§8-10).

Rectified-a.c. supplies — Since the power-line voltage ordinarily is 115 or 230 volts, a step-up transformer (§ 2-9) is used to obtain the desired voltage for the plates of the tubes in the equipment. The alternating secondary current is changed to unidirectional current by means of diode rectifier tubes (§ 3-1), and then passed through an inductance-capacity filter (§ 2-11) to the load circuit. The *load resistance* in ohms is equal to the d.c. output voltage of the power supply divided by the current in amperes (Ohm's Law, § 2-6).

Voltage regulation — Since there is always some resistance in power-supply circuits, and since the filter normally depends to a considerable extent upon the energy storage of inductance and capacity (§ 2-3, 2-5), the output voltage will depend upon the current drain on the supply. The change in output voltage with change in load current is called the *voltage regulation*. It is expressed as a percentage:

$$\% \text{ Regulation} = \frac{100\ (E_1 - E_2)}{E_2}$$

where E_1 is the no-load voltage (no current in the load circuit) and E_2 the full-load voltage (rated current in load circuit).

¶ 8-2 Rectifiers

Purpose and ratings — A rectifier is a device which will conduct current only in one direction. The diode tube (§ 3-1) is used almost exclusively for rectification in d.c. power supplies used with radio equipment. The important characteristics of tubes used as power-supply rectifiers are the voltage drop between plate and cathode at rated current, the maximum permissible inverse peak voltage, and the permissible peak plate current.

Voltage drop — Tube voltage drop depends upon the type of tube. In vacuum-type rectifiers it increases with the current flowing because of space-charge effect (§ 3-1), but can be minimized by using very small spacing between plate and cathode as is done in some rectifiers for receiver power supplies. Mercury-vapor rectifiers (§ 3-5) have a constant drop of about 15 volts, regardless of current. This is much smaller than the voltage drops encountered in vacuum-type rectifiers.

Inverse peak voltage — This is the maximum voltage developed between the plate and cathode of the rectifier when the tube is not conducting; i.e., when the plate is negative with respect to the cathode.

Peak plate current — This is the maximum *instantaneous* current through the rectifier. It can never be smaller than the load current in ordinary circuits, and may be several times higher.

Operation of mercury-vapor rectifiers — Because of its constant voltage drop, the mercury-vapor rectifier is more susceptible to damage than the vacuum type. With the latter, the increase in voltage drop tends to

limit current flow on heavy overloads, but the mercury-vapor rectifier does not have this limiting action and the cathode may be damaged under similar conditions.

In mercury-vapor rectifiers a phenomenon known as "arc-back," or breakdown of the mercury vapor and conduction in the opposite direction to normal, occurs at high inverse peak voltages, hence such tubes always should be operated within their inverse-peak voltage ratings. Arc-back also may occur if the cathode temperature is below normal; therefore the heater or filament voltage should be checked to make sure that the rated voltage is applied. This check should be made at the tube socket, to avoid errors caused by voltage drop in the leads. For the same reason, the cathode should be allowed to come up to its final temperature before plate voltage is applied; the time required for this is of the order of 15 to 30 seconds. When a tube is first installed, or is put into service after a long period of idleness, the cathode should be heated for a period of 10 minutes or so before application of plate voltage.

¶ 8-3 Rectifier Circuits

Half-wave rectifiers — The simple diode rectifier (§ 3-1) is called a *half-wave rectifier*, because it can pass only half of each cycle of alternating current. Its circuit is shown in Fig. 801-A. At the top of the figure is a representation of the applied a.c. voltage, with positive and negative alternations (§ 2-7) marked.

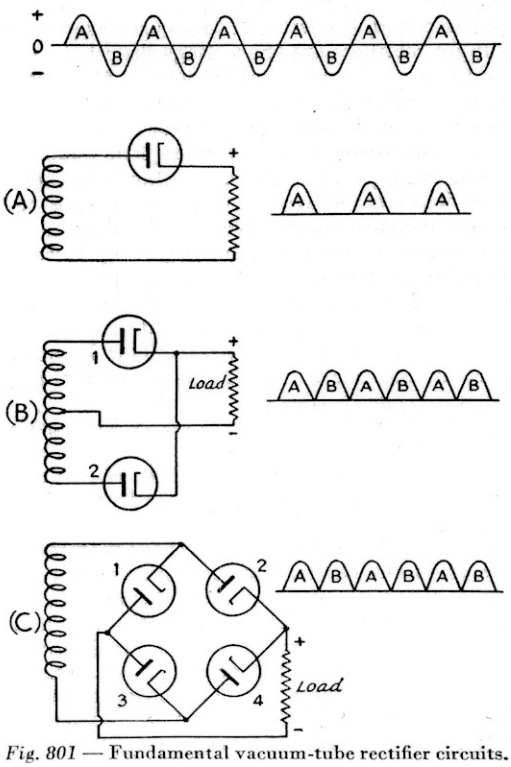

Fig. 801 — Fundamental vacuum-tube rectifier circuits.

When the plate is positive with respect to cathode, plate current flows through the load as indicated in the drawing at the right, but when the plate is negative with respect to cathode no current flows. This is indicated by the gaps in the output drawing. The output current is unidirectional but pulsating.

In this circuit the inverse peak voltage is equal to the maximum transformer voltage, which in the case of a sine wave is 1.41 times the r.m.s. voltage (§ 2-7).

Full-wave center-tap rectifier — Fig. 801-B shows the "full-wave center-tap" rectifier circuit, so called because both halves of the a.c. cycle are rectified and because the transformer secondary winding must consist of two equal parts with a connection brought out from the center. When the upper end of the winding is positive, current can flow through rectifier No. 1 to the load; this current cannot pass through rectifier No. 2 because its cathode is positive with respect to its plate. The circuit is completed through the transformer center-tap. When the polarity reverses the upper end of the winding is negative and no current can flow through No. 1, but the lower end is positive and therefore No. 2 passes current to the load, the return connection again being the center-tap. The resulting waveshape is shown at the right.

Since the two rectifiers are working alternately in this circuit, each half of the transformer secondary must be wound to deliver the full-load voltage; hence the total voltage across the transformer terminals is twice that required with the half-wave rectifier. Assuming negligible voltage drop in the particular rectifier which may be conducting at any instant, the inverse peak voltage on the other rectifier is equal to the maximum voltage between the outside terminals of the transformer. In the case of a sine wave, this is 1.41 times the total secondary r.m.s. voltage (§ 2-7).

Because energy is delivered to the load at twice the average rate as in the case of a half-wave rectifier, each tube carries only half the load current.

The bridge rectifier — The "bridge" type of full-wave rectifier is shown in Fig. 801-C. Its operation is as follows: When the upper end of the winding is positive, current can flow through No. 2 to the load but not through No. 1. On the return circuit, current flows through No. 3 by way of the lower end of the transformer winding. When the polarity reverses and the lower end of the winding becomes positive, current flows through No. 4 and the load and through No. 1 by way of the upper side of the transformer. The output waveshape is shown at the right.

The inverse peak voltage is equal to the maximum transformer voltage, or 1.41 times the r.m.s. secondary voltage in the case of a sine wave (§ 2-7). Energy is delivered to the load at the same average rate as in the case of the full-wave center-tap rectifier, each *pair* of tubes in series carrying half the load current.

8-4 Filters

Purpose of filter — As shown in Fig. 801, the output of a rectifier is pulsating d.c., which would be unsuitable for most vacuum-tube applications (§ 8-1). A *filter* is used to smooth out the pulsations so that practically unvarying direct current flows through the load circuit. The filter utilizes the energy-storage properties of inductance and capacity (§ 2-3, 2-5), by virtue of which energy stored in electromagnetic and electrostatic fields when the voltage and current are rising is restored to the circuit when the voltage and current fall, thus filling in the "gaps" or "valleys" in the rectified output.

Ripple voltage and frequency — The pulsations in the output of the rectifier can be considered to be caused by an alternating current superimposed on a steady direct current (§ 2-13). Viewed from this standpoint, the filter may be considered to consist of bypass condensers which short-circuit the a.c. while not interfering with the flow of d.c., and *chokes* or inductances which permit d.c. to flow through them but which have high reactance for the a.c. (§ 2-13). The alternating component is called the *ripple*. The effectiveness of the filter may be measured by the *per-cent ripple*, which is the r.m.s. value of the a.c. ripple voltage expressed as a percentage of the d.c. output voltage. With an effective filter, the ripple percentage will be low. Five per cent ripple is considered satisfactory for c.w. transmitters, but lower values (of the order of 0.25 per cent) are necessary for hum-free speech transmission and receiver plate supplies.

The ripple frequency depends upon the line frequency and the type of rectifier. In general, it consists of a fundamental plus a series of harmonics (§ 2-7), the latter being relatively unimportant since the fundamental is hardest to smooth out. With a half-wave rectifier, the fundamental is equal to the line frequency; with a full-wave rectifier, the fundamental is equal to twice the line frequency, or 120 cycles in the case of a 60-cycle supply.

Types of filters — Inductance-capacity filters are of the low-pass type (§ 2-11), using series inductances and shunt capacitances. Practical filters are identified as *condenser-input* and *choke-input*, depending upon whether a capacity or inductance is used as the first element in the filter. Resistance-capacity filters (§ 2–11) are used in applications where the current is very low and the voltage drop in the resistor can be tolerated.

Bleeder resistance — Since the condensers in a filter will retain their charge for a considerable time after power is removed (provided the load circuit is open at the time), it is good practice to connect a resistor across the output of the filter to discharge the condensers when the power supply is not in use. The resistance usually is high enough so that only a relatively small percentage of the total output current is consumed in it during normal operation.

Components — Filter condensers are made in several different types. Electrolytic condensers, which are available for voltages up to about 800, combine high capacity with small size, since the dielectric is an extremely thin film of oxide on aluminum foil. Condensers for higher voltages usually are made with a dielectric of thin paper impregnated with oil. The *working voltage* of a condenser is the voltage which it will withstand continuously.

Filter chokes or inductances are wound on iron cores, with a small gap in the core to prevent magnetic saturation of the iron at high currents. When the iron becomes saturated its permeability (§ 2-5) decreases, consequently the inductance also decreases. Despite the air-gap, the inductance of a choke usually varies to some extent with the direct current flowing in the winding; hence it is necessary to specify the inductance at the current which the choke is intended to carry. Its inductance with little or no direct current flowing in the winding may be considerably higher than the load value.

8-5 Condenser-Input Filters

Ripple voltage — The conventional condenser-input filter is shown in Fig. 802-A. No simple formulas are available for computing

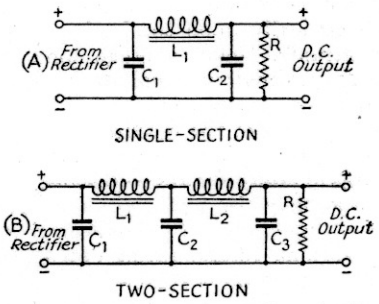

Fig. 802 — Condenser-input filter circuits.

the ripple voltage, but it will be smaller as both capacity and inductance are made larger. Adequate smoothing for transmitting purposes can be secured by using 4 to 8 μfd. at C_1 and C_2 and 20 to 30 henrys at L_1, for full-wave rectifiers with 120-cycle ripple (§ 8-4). A higher ratio of inductance to capacity may be used at higher load resistances (§ 8-1).

For receivers, as shown in Fig. 802-B, an additional choke, L_2, and condenser, C_3, of the same approximate values, are used to give additional smoothing. In such supplies the three condensers generally are 8 μfd. each, although the input condenser, C_1, sometimes is reduced to 4 μfd. Inductances of 10 to 20 henrys each will give satisfactory filtering with these capacity values.

For ripple frequencies other than 120 cycles, the inductance and capacity values should be multiplied by the ratio $120/F$, where F is the actual ripple frequency.

The bleeder resistance, R, should be chosen to draw 10 per cent or less of the rated output

current of the supply. Its value is equal to $1000E/I$, where E is the output voltage and I the load current in milliamperes.

Rectifier peak current — The ratio of rectifier peak current to average load current is high with a condenser-input filter. Small rectifier tubes designed for low-voltage supplies (type 80, etc.) generally carry load-current ratings based on the use of condenser-input filters. With rectifiers for higher power, such as the 866/866-A, the load current should not exceed 25 per cent of the rated peak plate current for one tube when a full-wave rectifier is used, or one-eighth the half-wave rating.

Output voltage — The d.c. output voltage from a condenser-input supply will, with light loads or no load, approach the peak transformer voltage. This is 1.41 times the r.m.s. voltage (§ 2-7) of the transformer secondary, in the case of Figs. 801-A and C, or 1.41 times the voltage from the center-tap to one end of the secondary in Fig. 801-B. At heavy loads, it may decrease to the *average* value of secondary voltage or about 90 per cent of the r.m.s. voltage, or even less. Because of this wide range of output voltage with load current, the voltage regulation (§ 8-1) is inherently poor.

The output voltage obtainable from a given supply cannot readily be calculated, since it depends critically upon the load current and filter constants. Under average conditions it will be approximately equal to or somewhat less than the r.m.s. voltage between the center-tap and one end of the secondary in the full-wave center-tap rectifier circuit (§ 8-3).

Ratings of components — Because the output voltage may rise to the peak transformer voltage at light loads, the condensers should have a working-voltage rating (§ 8-4) at least as high and preferably somewhat higher, as a safety factor. Thus, in the case of a center-tap rectifier having a transformer delivering 550 volts each side of the center-tap, the minimum safe condenser voltage rating will be 550 × 1.41 or 775 volts. An 800-volt, or preferably a 1000-volt, condenser should be used. Filter chokes should have the inductance specified at full-load current, and must have insulation between the winding and the core adequate to withstand the maximum output voltage.

§ 8-6 Choke-Input Filters

Ripple voltage — The circuit of a single-section choke-input filter is shown in Fig. 803-A. For 120-cycle ripple, a close approximation of the ripple to be expected at the output of the filter is given by the formula:

$$\left.\begin{matrix}\text{Single}\\ \text{Section}\\ \text{Filter}\end{matrix}\right\} \%\ \text{Ripple} = \frac{100}{LC}$$

where L is in henrys and C in μfd. The product, LC, must be equal to or greater than 20 to reduce the ripple to 5 per cent or less. This figure represents, in most cases, the economical limit for the single-section filter. Smaller percentages of ripple usually are more economically obtained with the two-section filter of Fig.

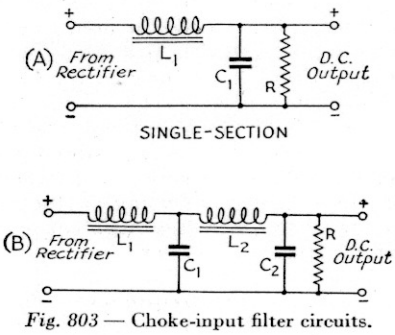

Fig. 803 — Choke-input filter circuits.

803-B. The ripple percentage (120-cycle ripple) with this arrangement is given by the formula:

$$\left.\begin{matrix}\text{Two}\\ \text{Section}\\ \text{Filter}\end{matrix}\right\} \%\ \text{Ripple} = \frac{650}{L_1L_2\ (C_1 + C_2)^2}$$

For a ripple of 0.25 per cent or less, the denominator should be 2600 or greater.

These formulas can be used for other ripple frequencies by multiplying each inductance and capacity value in the filter by the ratio $120/F$, where F is the actual ripple frequency.

The distribution of inductance and capacity in the filter will be determined by the value of input-choke inductance required (next paragraph), and the permissible a.c. output impedance. If the supply is intended for use with an audio-frequency amplifier, the reactance (§ 2-8) of the last filter condenser should be small (20 per cent or less) compared to the other a.f. resistance or impedance in the circuit, usually the tube plate resistance and load resistance (§3-2, 3-3). On the basis of a lower a.f. limit of 100 cycles for speech amplification (§ 5–9), this condition is usually satisfied when the output capacity (last filter capacity) of the filter is 4 to 8 μfd., the higher value being used for the lower tube and load resistances.

The input choke — The rectifier peak current and the power-supply voltage regulation depend almost entirely upon the inductance of the input choke in relation to the load resistance (§ 8-1). The function of the choke is to raise the ratio of average to peak current (by its energy storage), and to prevent the d.c. output voltage from rising above the average value (§ 2-7) of the a.c. voltage applied to the rectifier. For both purposes, its impedance (§ 2-8) to the flow of the a.c. component (§ 8-4) must be high.

The value of input-choke inductance which prevents the d.c. output voltage from rising above the average of the rectified a.c. wave is the *critical inductance*. For 120-cycle ripple, it is given by the approximate formula:

$$L_{\text{crit.}} = \frac{\text{Load resistance (ohms)}}{1000}$$

For other ripple frequencies, the inductance required will be the above value multiplied by the ratio of 120 to the actual ripple frequency.

With inductance values less than critical, the d.c. output voltage will rise because the filter tends to act as a condenser-input filter (§ 8-5). With critical inductance, the peak plate current of one tube in a center-tap rectifier will be approximately 10 per cent higher than the d.c. load current taken from the supply.

An inductance of twice the critical value is called the *optimum* value. This value gives a further reduction in the ratio of peak to average plate current, and represents the point at which further increase in inductance does not give correspondingly improved operating characteristics.

Swinging chokes — The formula for critical inductance indicates that the inductance required varies widely with the load resistance. In the case where there is no load except the bleeder (§ 8-4) on the power supply, the critical inductance required is highest; much lower values are satisfactory when the full-load current is being delivered. Since the inductance of a choke tends to rise as the direct current flowing through it is decreased (§ 8-4), it is possible to effect an economy in materials by designing the choke to have a "swinging" characteristic such that it has the required critical inductance value with the bleeder load only, and about the optimum inductance value at full load. Thus, in the case where the bleeder resistance is 20,000 ohms and the full-load resistance (including the bleeder) is 2500 ohms, a choke which swings from 20 henrys to 5 henrys over the full output-current range will fulfill the requirements.

Resonance — Resonance effects in the series circuit across the output of the rectifier which is formed by the first choke (L_1) and first filter condenser (C_1) must be avoided, since the ripple voltage would build up to large values (§ 2-10). This not only is the opposite action to that for which the filter is intended, but also may cause excessive rectifier peak currents and abnormally high inverse peak voltages. For full-wave rectification the ripple frequency will be 120 cycles for a 60-cycle supply (§ 8-4), and resonance will occur when the product of choke inductance in henrys times condenser capacity in microfarads is equal to 1.77. The corresponding figure for 50-cycle supply (100-cycle ripple frequency) is 2.53, and for 25-cycle supply (50-cycle ripple frequency), 13.5. At least twice these products should be used to ensure against resonance effects.

Output voltage — Provided the input-choke inductance is at least the critical value, the output voltage may be calculated quite closely by the equation:

$$E_o = 0.9E_t - \frac{(I_b + I_L)\,(R_1 + R_2)'}{1000} - E_r$$

where E_o is the output voltage; E_t is the r.m.s. voltage applied to the rectifier (r.m.s. voltage between center-tap and one end of the secondary in the case of the center-tap rectifier); I_b and I_L are the bleeder and load currents, respectively, in milliamperes; R_1 and R_2 are the resistances of the first and second filter chokes; and E_r is the drop between rectifier plate and cathode (§ 8-2). These voltage drops are shown in Fig. 804.

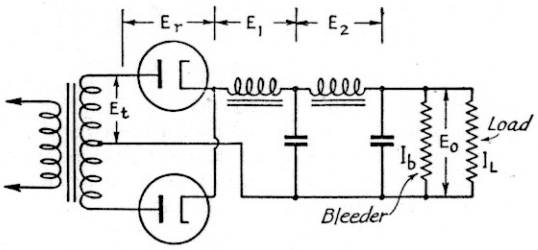

Fig. 804 — Voltage drops in the power-supply circuit.

At no load I_L is zero, hence the no-load voltage may be calculated on the basis of bleeder current only. The voltage regulation may be determined from the no-load and full-load voltages (§ 8-1).

Ratings of components — Because of better voltage regulation, filter condensers are subjected to smaller variations in d.c. voltage than in the condenser-input filter (§ 8-5). However, it is advisable to use condensers rated for the peak transformer voltage in case the bleeder resistor should burn out when there is no external load on the power supply, since the voltage then will rise to the same maximum value as with a condenser-input filter.

The input choke may be of the swinging type, the required no-load and full-load inductance values being calculated as described above. The second choke (*smoothing choke*) should have constant inductance with varying d.c. load currents. Values of 10 to 20 henrys ordinarily are used. Since chokes usually are placed in the positive leads, the negative being grounded, the windings should be insulated from the core to withstand the full d.c. output voltage of the supply.

8-7 The Plate Transformer

Output voltage — The output voltage of the plate transformer depends upon the required d.c. load voltage and the type of rectifier circuit. With condenser-input filters, the r.m.s. secondary voltage usually is made equal to or slightly more than the d.c. output voltage, allowing for voltage drops in the rectifier tubes and filter chokes as well as in the transformer itself. The full-wave center-tap rectifier requires a transformer giving this voltage each side of the secondary center-tap (§ 8-3).

With a choke-input filter, the required r.m.s. secondary voltage (each side of center-tap for a center-tap rectifier) can be calculated by the equation:

$$E_t = 1.1\left[E_o + \frac{I(R_1 + R_2)}{1000} + E_r\right]$$

where E_o is the required d.c. output voltage, I is the load current (including bleeder current) in milliamperes, R_1 and R_2 are the resistances of the filter chokes, and E_r is the voltage drop in the rectifier. E_t is the full-load r.m.s. (§ 2-7) secondary voltage; the open-circuit voltage usually will be 5 to 10 per cent higher.

Volt-ampere rating — The volt-ampere rating (§ 2-8) of the transformer depends upon the type of filter (condenser or choke input). With a condenser-input filter the heating effect in the secondary is higher because of the high ratio of peak to average current, consequently the volt-amperes consumed by the transformer may be several times the watts delivered to the load. With a choke-input filter, provided the input choke has at least the critical inductance (§ 8-6), the secondary volt-amperes can be calculated quite closely by the equation:

$$\text{Sec. V.A.} = 0.00075\ EI$$

where E is the *total* r.m.s. voltage of the secondary (between the outside ends in the case of a center-tapped winding) and I is the d.c. output current in milliamperes (load current plus bleeder current). The primary volt-amperes will be 10 to 20 per cent higher because of transformer losses.

¶ 8-8 Voltage Stabilization

Gaseous regulator tubes — There is frequent need for maintaining the voltage applied to a low-voltage low-current circuit (such as the oscillator in a superhet receiver or the frequency-controlling oscillator in a transmitter) at a practically constant value, regardless of the voltage regulation of the power supply or variations in load current. In such applications, gaseous regulator tubes (VR105–30, VR150–30, etc.) can be used to good advantage. The voltage drop across such tubes is constant over a moderately wide current range. The first number in the tube designation indicates the terminal voltage, the second the maximum permissible tube current.

The fundamental circuit for a gaseous regulator is shown in Fig. 805-A. The tube is connected in series with a *limiting resistor*, R_1, across a source of voltage which must be higher than the *starting* voltage, or voltage required for ionization of the gas in the tube. The starting voltage is about 30 per cent higher than the operating voltage. The load is connected in parallel with the tube. For stable operation, a minimum tube current of 5 to 10 ma. is required. The maximum permissible current with most types is 30 ma.; consequently, the load current cannot exceed 20 to 25 ma. if the voltage is to be stabilized over a range from zero to maximum load current.

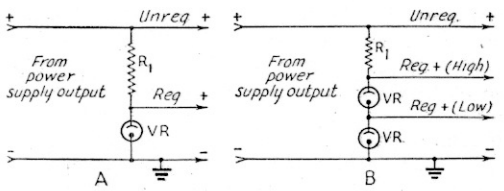

Fig. 805 — Voltage-stabilizing circuits using VR tubes.

The value of the limiting resistor must lie between that which just permits minimum tube current to flow and that which just passes the maximum permissible tube current when there is no load current. The latter value is generally used. It is given by the equation:

$$R = \frac{1000\ (E_s - E_r)}{I}$$

Where R is the limiting resistance in ohms, E_s is the voltage of the source across which the tube and resistor are connected, E_r is the rated voltage drop across the regulator tube, and I is the maximum tube current in milliamperes (usually 30 ma.).

Fig. 805-B shows how two tubes may be used in series to give a higher regulated voltage than is obtainable with one, and also to give two values of regulated voltage. The limiting resistor may be calculated as above, using the sum of the voltage drops across the two tubes for E_r. Since the upper tube must carry more current than the lower, the load connected to the low-voltage tap must take small current. The total current taken by the loads on both the high and low taps should not exceed 20 to 25 milliamperes.

Voltage regulation of the order of 1 per cent can be obtained with circuits of this type.

Electronic voltage regulation — A voltage regulator circuit suitable for higher voltages and currents than the gaseous tubes, and also having the feature that the output voltage can be varied over a rather wide range, is shown in Fig. 806. A high-gain voltage amplifier tube (§ 3-3), usually a sharp cut-off pentode (§ 3-5) is connected in such a way that a small change in the output voltage of the power supply causes a change in grid bias, and thereby a corresponding change in plate current. Its plate current flows through a resistor (R_5), the voltage drop across which is used to bias a second tube — the "regulator" tube — whose plate-cathode circuit is connected in series with the load circuit. The regulator tube therefore functions as an automatically variable series resistor. Should the output voltage increase slightly the bias on the control tube will become more positive, causing the plate current of the control tube to increase and the drop across R_5 to increase correspondingly. The bias on the regulator tube therefore becomes more negative and the effective resistance of the regulator tube increases, causing the terminal voltage to drop. A decrease in output voltage causes the reverse action. The time lag in the action of the system is negligible, and with proper circuit constants the output voltage can be held within a fraction of a per cent throughout the useful range of load currents and over a wide range of supply voltages.

An essential in this system is the use of a constant-voltage bias source for the control

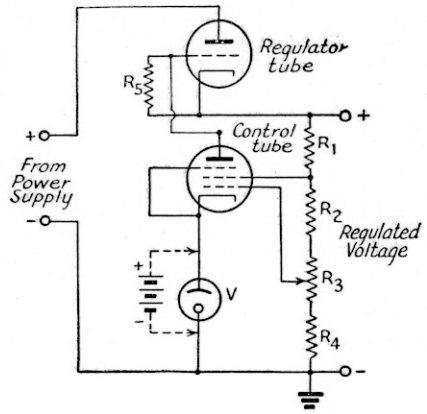

Fig. 806 — Electronic voltage regulator. The regulator tube is ordinarily a 2A3 or a number of them in parallel, the control tube a 6SJ7 or similar type. The filament transformer for the regulator tube must be insulated for the plate voltage, and cannot supply current to other tubes when a filament type regulator tube is used. Typical values: R_1, 10,000 ohms; R_2, 25,000 ohms; R_3, 10,000-ohm potentiometer; R_4, 5000 ohms; R_5, 0.5 megohm.

tube. The voltage change which appears at the grid of the tube is the *difference* between a fixed negative bias and a positive voltage which is taken from the voltage divider across the output. To get the most effective control, the negative bias must not vary with plate current. The most satisfactory type of bias is a dry battery of 45 to 90 volts, but a gaseous regulator tube (VR75-30) or a neon bulb of the type without a resistor in the base may be used instead. This is indicated in the diagram. If the gas tube or neon bulb is used, a negative-resistance type of oscillation (§ 3-7) may take place at audio frequencies or higher, in which case a condenser of 0.1 μfd. or more should be connected across the tube. A similar condenser between the control-tube grid and cathode also is frequently helpful in this respect.

The variable resistor, R_3, is used to adjust the bias on the control tube to the proper operating value. It also serves as an output voltage control, setting the value of regulated voltage within the existing operating limits.

The maximum output voltage obtainable is equal to the power-supply voltage minus the minimum drop through the regulator tube. This drop is of the order of 50 volts with the tubes ordinarily used (power triodes having low plate resistance, such as the 2A3). The maximum current also is limited by the regulator tube; 100 milliamperes is a safe value for the 2A3. Two or more regulator tubes may be connected in parallel to increase the current-carrying capacity, with no change in the circuit.

¶ 8-9 Bias Supplies

Requirements — A bias supply is not called upon to deliver current to a load circuit, but simply to furnish a fixed grid voltage to set the operating point of a tube (§ 3-3). However, in most applications it is nevertheless true that current flows through the bias supply, because such supplies are used chiefly in connection with power amplifiers of the Class-B and Class-C type, where grid-current flow is a feature of operation (§ 3-4). In circuit design a bias supply resembles the rectified-a.c. plate supply (§ 8-1), having a transformer-rectifier-filter system employing similar circuits. Bias supplies may be classified in two types, those furnishing only *protective* bias, intended to prevent excessive plate current flow in a power tube in case of loss of grid leak bias (§ 3-6) from excitation failure, and those which furnish the actual *operating* bias for the tubes. In the former type, voltage regulation (§ 8-1) is relatively unimportant; in the latter it may be of considerable importance.

In general, a bias supply should have well-filtered d.c. output, especially if it furnishes the operating bias for the stage, since ripple voltage may modulate the signal on the grid of the amplifier tube (§ 5-1). Condenser-input filters are generally used, since the regulation of the supply is not a function of the filter. The constants given in § 8-5 are applicable.

Voltage regulation — A bias supply must always have a bleeder resistance (§ 8-4) connected across its output terminals, to provide a d.c. path from grid to cathode of the tube being biased. Although the grid circuit takes no current from the supply, grid current flows through the bleeder resistor and the voltage across the resistor therefore varies with grid current. This variation in voltage is practically independent of the bias-supply design unless special voltage-regulating means are used.

Protective bias — This type of bias supply is designed to give an output voltage sufficient to bias the tube to which it is applied at or near the plate-current cut-off point (§ 3-2). A typical circuit is given in Fig. 807. The resistance, R_1, is the grid-leak resistor (§ 3-6) for the amplifier tube with which the supply is used, and the normal operating bias is developed by the flow of grid current through this resistor. R_2 is connected in series with R_1 across the output of the supply, to reduce the voltage across R_1, when there is no grid-current flow, to the cut-off value for the tube being biased. The value of R_2 is given by the formula:

$$R_2 = \frac{E_t - E_c}{E_c} \times R_1$$

where E_t is the output voltage of the supply with R_2 and R_1 in series as a load, E_c is the cut-off bias, and R_1 is as described above.

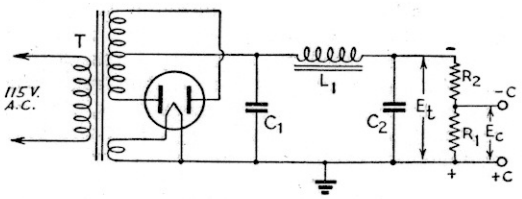

Fig. 807 — Supply for furnishing protective bias to a power amplifier. The transformer, T, should furnish peak voltage at least equal to the protective bias required,

When such a supply is used with a Class-C amplifier, the voltage across R_1 from grid-current flow will normally be higher than that from the bias supply itself, since the latter is adjusted to cut-off while the operating bias will be twice cut-off or higher (§ 3-4). In some cases the grid-leak voltage may even exceed the peak output voltage of the transformer (1.41 times half the total secondary voltage, in the circuit shown). The filter condensers in such a bias supply must, therefore, be rated to stand the maximum operating bias voltage on the Class-C amplifier, if this voltage exceeds the nominal output voltage of the supply.

Voltage stabilization — When the bias supply furnishes operating rather than simply protective bias, the value of bias voltage should be as constant as possible even when the grid current of the biased tube varies. A simple method of improving bias voltage regulation is to make the bleeder resistance low enough so that the current through it from the supply is several times the maximum grid current to be expected. By this means, the percentage variation in current is reduced. This method requires, however, that a considerable amount of power be dissipated in the bleeder, which in turn calls for a relatively large power transformer and filter choke.

Bias-voltage variation may also be reduced by means of a regulator tube, as shown in Fig. 808. The regulator tube usually is a triode

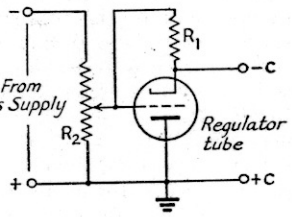

Fig. 808 — Automatic voltage regulator for bias supplies. For best operation the tube used should be one having high mutual conductance (§ 3-2).

having a plate-current rating adequate to carry the expected grid current. It is cathode-biased (§ 3-6) by the resistor, R_1, which is of the order of several hundred thousand ohms or a few megohms, so that with no grid current the tube is biased practically to cut-off. Because of this high resistance, the grid current will flow through the plate resistance of the regulator tube, which is comparatively low, rather than through R_1 and R_2; hence the voltage from the supply, across R_1 and the cathode-plate circuit of the regulator tube in series, can be considered constant. The bias voltage is equal to the voltage across the tube alone. When grid current flows, the voltage across the tube will tend to increase; hence the drop across R_1 decreases, lowering the bias on the regulator and reducing its plate resistance. This, in turn, reduces the tube voltage drop, and the bias voltage tends to remain constant over a fairly wide range of grid current values.

At low bias voltages it may be necessary to use a number of tubes in parallel to get sufficient variation of plate resistance for good regulating action. The bias supply must furnish the required bias voltage plus the voltage required to bias the regulator tube to cut-off, considering the output bias voltage as the plate voltage applied to the regulator. The current taken from the bias supply is negligible. R_2 may be tapped to provide a range of bias voltages to meet different tube requirements.

Multi-stage bias supplies — Where several power amplifier tubes are to be biased from a single supply, the various bias circuits must be isolated by some means. If the grid currents of all stages should flow through a single bleeder resistor, a variation in grid current in one stage would change the bias on all, a condition which would interfere with effective adjustment and operation of the transmitter.

When protective bias is to be furnished several stages, the circuit arrangement of Fig. 809, using rectifier tubes to isolate the individual grid-leaks of the various stages, may be employed. In the diagram, two type 80 rectifiers are used to furnish bias to four stages. Each pair of resistors (R_1R_2) constitutes a separate bleeder across the bias supply. R_1 is the grid-leak for the biased stage; R_2 is a dropping resistor to adjust the voltage across R_1 to the cut-off value (without grid-current flow) for the biased tube. The values of R_1 and R_2 may be calculated as described in the paragraph on protective bias. In this case, the bias supply should be designed to have inherently good voltage regulation; i.e., a choke-input filter with appropriate filter and bleeder constants (§ 8-6) should be used, the bleeder being separate from those associated with the rectifier tubes. When the voltage across R_1R_2 rises because of grid-current flow through R_1, the load on the supply will vary (hence the necessity for good voltage regulation in the supply), but there is no interaction of grid currents in the separate bleeders because the rectifiers can pass current only in one direction.

When a single supply is to furnish operating bias for several stages, a separate regulator-tube circuit (Fig. 808) may be used for each one. Individual voltages for the various stages can be obtained by appropriate taps on R_2.

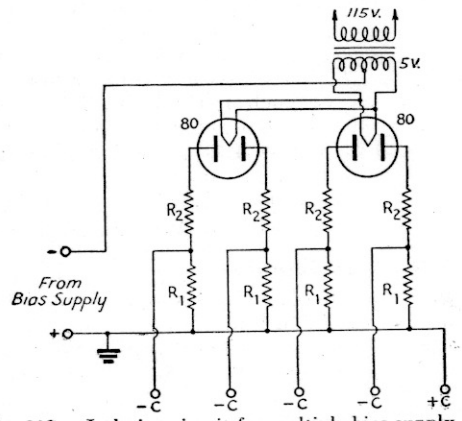

Fig. 809 — Isolating circuit for multiple bias supply.

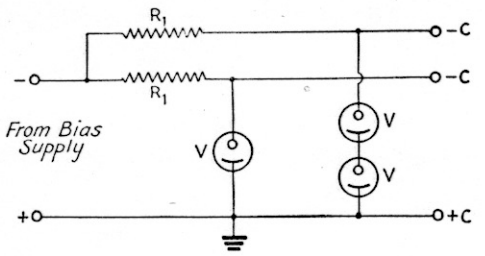

Fig. 810 — Use of VR tubes to stabilize bias voltage.

Well-regulated bias for several stages may be obtained by the use of gaseous regulator tubes, when the voltage and current ratings of the tubes permit their use. This is shown in Fig. 810. A single tube or two or more in series can be used to give the desired bias-voltage drop; the bias supply voltage must be high enough to provide starting voltage for the tubes in series. R_1 is the protective resistance (§ 8-8); its value should be calculated for minimum stable tube current. The maximum grid current that can be handled is 20 to 25 milliamperes with available regulator tubes.

§ 8-10 Miscellaneous Power-Supply Circuits

Voltage dividers — A voltage divider is a resistance connected across a source of voltage and tapped at appropriate points, from which voltages lower than the terminal voltage may be taken (§ 2-6). Since the voltage at any tap depends upon the current drawn from the tap, the voltage regulation (§ 8-1) of such a divider is inherently poor. Hence, a voltage divider is best suited to applications where the currents drawn are constant, or where separate voltage-regulating circuits (§ 8-8) are used to compensate for voltage variations at the taps.

A typical voltage-divider arrangement is shown in Fig. 811. The terminal voltage is E, and two taps are provided to give lower voltages, E_1 and E_2, at currents I_1 and I_2 respectively. The smaller the resistance between taps in proportion to the total resistance, the smaller the voltage between the taps. In addition to the load currents, I_1 and I_2, there is also the bleeder current, I_b. The voltage divider may be the bleeder for the power supply. For convenience, the voltage divider in the figure is considered to be made up of separate resistances, R_1, R_2, R_3, between taps. R_1 carries only the bleeder current, I_b. R_2 carries I_1 in addition to I_b; R_3 carries I_2, I_1 and I_b. For the purpose of calculating the resistances required, a bleeder current, I_b, must be assumed; generally it is low compared to the total load current (10 per cent or so). Then

$$R_1 = \frac{E_1}{I_b}$$

$$R_2 = \frac{E_2 - E_1}{I_b + I_1}$$

$$R_3 = \frac{E - E_2}{I_b + I_1 + I_2}$$

the currents being expressed in amperes.

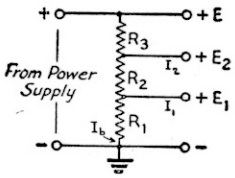

Fig. 811 — Typical voltage-divider circuit.

The method may be extended to any desired number of taps, each resistance section being calculated by Ohm's Law (§ 2-6) using the voltage drop across it and the total current through it. The power dissipated by each section may be calculated by multiplying the same quantities together.

In case it is desired to have the bleeder resistance total to a predetermined value, the same method of calculation may be followed, but different values of bleeder current should be tried until the correct result is found.

Transformerless plate supplies — It is possible to rectify the line voltage directly, without using a step-up power transformer, for certain applications (such as some types of receivers) where the low voltage so obtained is satisfactory. A simple power-supply system of this type, using a half-wave rectifier, is shown in Fig. 812. Tubes for this purpose are provided with heaters operating at relatively high voltages (25, 35, 70, or 115 volts), which can be connected across the line in series with other tube filaments and/or a resistor, R, of suitable value to limit the current to the rated value for the tube heater. The rectifier often is incorporated in the same tube envelope with an audio power-amplifier tube.

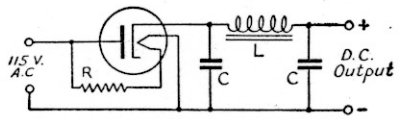

Fig. 812 — Transformerless plate supply with half-wave rectifier. Other filaments are connected in series with R.

The half-wave circuit shown has a fundamental ripple frequency equal to the line frequency (§ 8-4) and hence requires more inductance and capacity in the filter for a given ripple percentage (§ 8-5) than the full-wave rectifier. A condenser-input filter generally is used, frequently with a second choke and third condenser (§ 8-5) to provide the necessary smoothing.

A disadvantage of the transformerless circuit is that no ground connection can be used on the power supply, unless care is taken to insure that the grounded side of the power line is connected to the grounded side of the supply. Receivers using this type of supply generally are grounded through a low capacity (0.05 μfd.) condenser, to avoid short-circuiting the

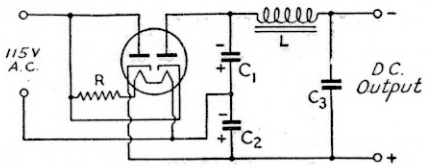

Fig. 813 — Voltage-doubling transformerless plate supply.

line should the line plug be inserted in the socket the wrong way, and the chassis is isolated from the power supply. The input condenser should be at least 16 μfd. and preferably 32 μfd., to keep the output voltage high and to improve voltage regulation.

Voltage-doubling circuits — The circuit arrangement of Fig. 813, frequently used in transformerless plate supplies, gives full-wave rectification combined with doubling of the output voltage. This is accomplished by using a double-diode rectifier, one section of which charges C_1 when the line polarity between its plate and cathode is positive while the other section charges C_2 when the line polarity reverses. Thus each condenser is charged separately to the same d.c. voltage, and they discharge in series into the load circuit. For effective operation of this circuit, the capacities of C_1 and C_2 must be at least 16 μfd. each and preferably higher.

The ripple frequency with this circuit is twice the line frequency, since it is a full-wave circuit (§ 8-4). The voltage regulation is inherently poor and depends critically upon the capacities of C_1 and C_2, being better as these capacities are made larger. A typical supply with 16 μfd. each at C_1 and C_2 will have an output voltage of approximately 300 at light loads, dropping to about 210 volts at the rated current of 75 milliamperes.

No direct ground can be used on this supply or on the equipment with which it is used. If an r.f. ground is made through a condenser the capacity should be small (about 0.05 μfd.), since it is in shunt from plate to cathode of one rectifier. A large capacity (low reactance) would by-pass the rectifier, thereby nullifying its operation.

Duplex plate supplies — In some cases it may be advantageous economically to obtain two plate-supply voltages from a single power supply, making one or more of the components serve a double purpose. Two circuits of this type are shown in Figs. 814 and 815.

In Fig. 814, a bridge rectifier is used to obtain the full transformer voltage, while a connection is also brought out from the center-tap to obtain a second voltage corresponding to half the total transformer secondary voltage. The sum of the currents drawn from the two taps should not exceed the d.c. ratings of the rectifier tubes and transformer. Filter values for each tap are computed separately (§ 8-6).

Fig. 815 shows how a transformer with multiple secondary taps may be used to obtain both high and low voltages simultaneously. A separate full-wave rectifier is used at each tap. The filter chokes are placed in the common negative lead, but separate filter condensers are required. The sum of the currents drawn from each tap must not exceed the transformer rating, and the chokes must be rated to carry the total load current. Each bleeder resistance should have a value in ohms of 1000 times the maximum rated inductance in henrys of the swinging choke, L_1, for best regulation (§ 8-6).

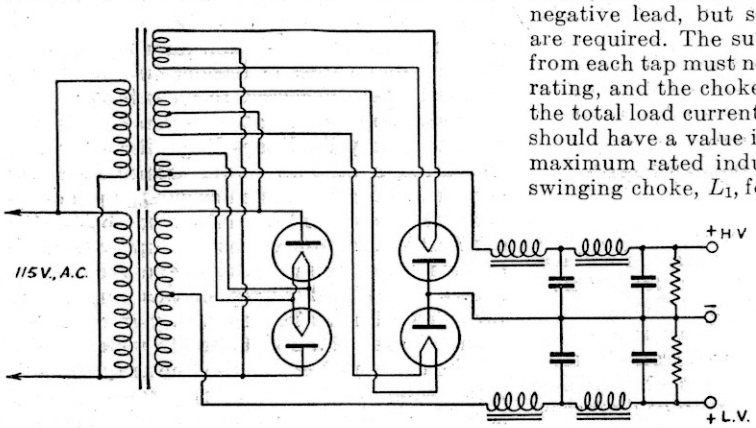

Fig. 814 — Duplex plate supply, in which a combination bridge and center-tap rectifier circuit is used to deliver two output voltages with good regulation. Only one plate transformer is required.

Rectifiers in parallel — Vacuum-type rectifiers may be connected in parallel (plate to plate and cathode to cathode) for higher current-carrying capacity with no circuit changes.

When mercury-vapor rectifiers are connected in parallel, slight differences in tube characteristics may make one ionize at a slightly lower voltage than the other. Since the ignition voltage is higher than the operating voltage the first tube to ionize carries the whole load, since the voltage drop is then too low to ignite the second tube. This can be prevented by connecting resistors in series with each plate, as shown in Fig. 816, thereby insuring that a high-enough voltage for ignition will be available.

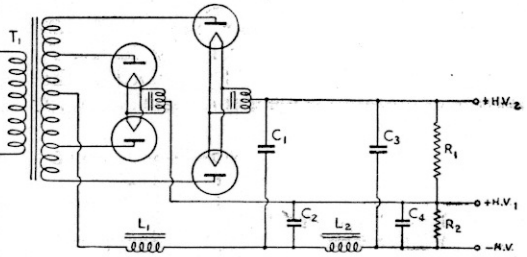

Fig. 815 — Power supply in which a single transformer and set of chokes serve for two different output voltages.

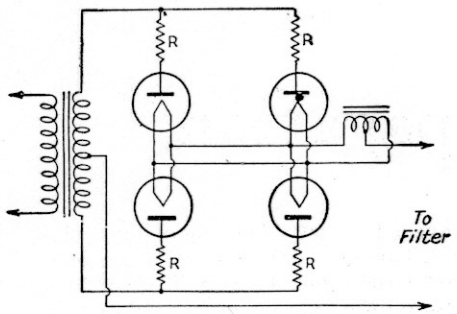

Fig. 816 — Operating mercury-vapor rectifiers in parallel. The resistors marked *R* should be 50 to 100 ohms.

Vibrator power supplies — For portable or mobile work, the most common source of power for both filaments and plates is the 6-volt automobile-type storage battery. Filaments may be heated directly from the battery, while plate power is obtained by passing current from the battery through the primary of a suitable transformer, interrupting it at regular intervals to give the changing magnetic field required for inducing a voltage in the secondary (§ 2-5), and rectifying the secondary output. The rectified output is pulsating d.c., which may be filtered by ordinary means (§ 8-5).

Fig. 817 shows two types of circuits used, both with vibrating-reed interrupters (*vibrators*). At A is shown the *non-synchronous* type of vibrator. When the battery circuit is open the reed is midway between the two contacts, touching neither. On closing the battery circuit the magnet coil pulls the reed into contact with the lower point, causing current to flow through the lower half of the transformer primary winding. Simultaneously, the magnet coil is short-circuited and the reed swings back. Inertia carries it into contact with the upper point, causing current to flow through the upper half of the transformer primary. The magnet coil again is energized, and the cycle repeats itself.

The synchronous circuit of Fig. 817-B is provided with an extra pair of contacts which rectify the secondary output of the transformer, thus eliminating the need for a separate rectifier tube. The secondary center-tap furnishes the positive output terminal when the relative polarities of primary and secondary windings are correct. The proper connections may be determined by experiment, reversing the secondary connections if the first trial is wrong.

The buffer condenser, C_2, across the transformer secondary is used to absorb surges which would occur on breaking the current, when the magnetic field collapses practically instantaneously and hence causes a very high voltage to be induced in the secondary (§ 2-5). Its value usually is between 0.005 and 0.03 μfd. and for 250-300 volt supplies it should be rated at 1500 to 2000 volts d.c. The proper capacity is rather critical, and should be determined experimentally. The optimum value is that which results in least battery current for a given rectified d.c. output from the supply.

Sparking at the vibrator contacts causes r.f. interference ("hash") when such a supply is used with a receiver. This can be minimized by installing hash filters, consisting of RFC_1 and C_1, in the battery circuit, and RFC_2 with C_3 in the d.c. output circuit. C_1 is usually from 0.5 to 1 μfd., a 50-volt rating being adequate. RFC_1 consists of about 50 turns wound to about half-inch diameter, No. 12 or No. 14 wire being required to carry the rather heavy battery current without undue loss of voltage. C_3 may be of the order of 0.01 to 0.1 μfd., and RFC_2 a 2.5-millihenry choke of ordinary design. Equally as important as the hash filter is thorough shielding of the power supply and its connecting leads, since even a small piece of wire or metal will radiate enough hash to cause interference in a sensitive receiver.

Line-voltage adjustment — In some localities the line voltage may vary considerably from the nominal 115 volts as the load on the power system changes. Since it is desirable to operate tube equipment, particularly filaments and heaters, at constant voltage for maximum life, a means of adjusting the line voltage to the rated value is desirable. This can be accomplished by the circuit shown in Fig. 818, utilizing a step-down transformer with a tapped secondary connected as an autotransformer (§ 2-9). The secondary preferably should be tapped in steps of two or three volts, and should have sufficient total voltage to compensate for the widest variations encountered. Depending upon the end of the secondary to which the line is connected, the voltage to the load can be made either higher or lower than the line voltage. A secondary winding capable of carrying five amperes will serve for loads up to 500 volt-amperes on a 115-volt line.

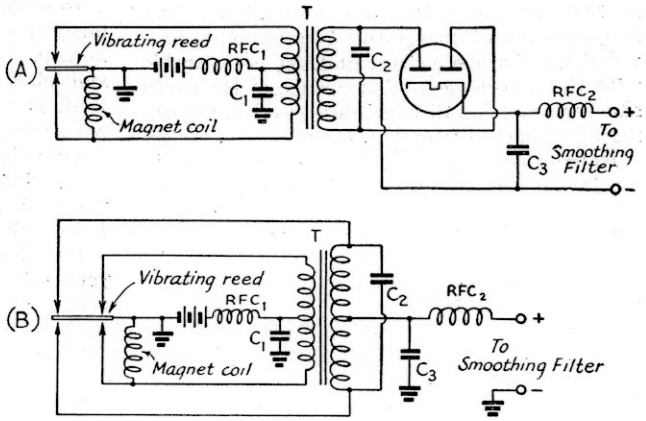

Fig. 817 — Basic types of vibrator power-supply circuits.

CHAPTER NINE

Wave Propagation

¶ 9-1 Radio Waves

Nature of radio waves — Radio waves are electromagnetic waves, consisting of traveling electrostatic and electromagnetic fields so related to each other that the energy is evenly divided between the two, and with the lines of force in the two fields at right angles to each other in a plane perpendicular to the direction of propagation, as shown in Fig. 901. Except for the difference in order of wavelength, they have the same nature as light waves, travel with the same speed (300,000,000 meters per second in space), and, similarly to light, can be reflected, refracted and diffracted.

Polarization — The polarization of a radio wave is taken as the direction of the lines of force in the electrostatic field. If the direction of the electrostatic component is perpendicular to the earth the wave is said to be *vertically polarized*, while if the electrostatic component is parallel to the earth the wave is *horizontally polarized*. The electromagnetic component, being at right angles to the electrostatic, therefore has its lines of force vertical when the wave is horizontally polarized and horizontal when the wave is vertically polarized.

Reflection — Radio waves may be reflected from any sharply defined discontinuity, of suitable characteristics and dimensions, in the medium in which they are propagated. Any good conductor meets this requirement, provided its dimensions are at least comparable with the wavelength. The surface of the earth also forms such a discontinuity, and waves are readily reflected from the earth.

Refraction — Refraction of radio waves is similar to the refraction of light; that is, the wave is bent when moving obliquely into a region having a different refractive index from that of the region it leaves. This bending results because the velocity of propagation differs in the two regions, so that the part of the wavefront which enters first travels faster or slower than the part which enters the new region last, causing the wavefront to turn.

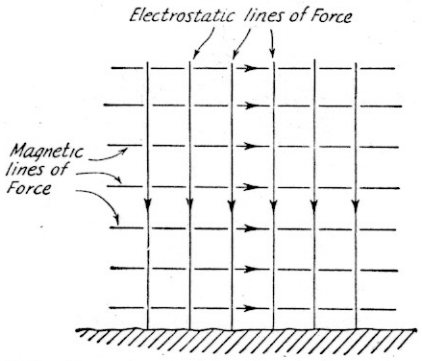

Fig. 901 — Representation of electrostatic and electromagnetic lines of force in a radio wave. Arrows indicate instantaneous directions of the fields for a wave traveling toward the reader. Reversing the direction of one set of lines would reverse the direction of travel.

Diffraction — When a wave grazes the edge of an object in passing, it is bent around the object. This bending is called *diffraction*.

Ground and sky waves — Two types of waves occur, one traveling along the surface of the ground, the other traveling through the atmosphere and having no contact with the ground along most of its path. The former is called the *ground wave*, the latter the *sky wave*. The ground wave dies out rather rapidly but the sky wave can travel great distances, especially on high frequencies (short wavelengths).

Field strength — The intensity of the electrostatic field of the wave is called the *field strength* at the point of measurement. It is usually expressed in microvolts per meter, and is equivalent to the voltage induced in a wire one meter long placed with its axis parallel to the direction of polarization.

¶ 9-2 The Ground Wave

Description — The ground wave is continuously in contact with the surface of the earth and, in cases where the distance of transmission makes the curvature of the earth important, is propagated by means of diffraction, with refraction in the lower atmosphere also having some effect. The ground wave is practically independent of seasonal and day and night effects at the higher frequencies (above 1500 kc.).

Polarization — A ground wave must be vertically polarized because the electrostatic field of a horizontally polarized wave would be short-circuited by the ground, which acts as a conductor at the frequencies for which the ground wave is of most interest.

Ground characteristics and losses — The wave induces a current in the ground in traveling along its surface. If the ground were a perfect conductor there would be no loss of energy, but actual ground has appreciable resistance, so that the current flow causes some energy dissipation. This loss must be supplied by the wave, which is correspondingly weakened. Hence, the transmitting range depends upon the ground characteristics. Because sea water is a good conductor, the range will be greater over the ocean than over land. The losses in-

crease with fequency, so that the ground wave is rapidly attenuated at high frequencies and above about 2 Mc. is of little importance except in purely local communication.

Range of ground wave — At frequencies in the vicinity of 2 Mc. the ground-wave range is of the order of 200 miles over average land and perhaps two or three times as far over sea water, for a medium-power transmitter (500 watts or so) using a good antenna. At higher frequencies the range drops off rapidly, and above 4 Mc. the ground wave is useful only for work over quite short distances.

9-3 The Ionosphere

Description — Since a sky wave leaving the transmitting antenna has to travel upward with respect to the earth's surface, it would simply continue out into space if its path were not bent sufficiently to bring it back to the earth. The medium which causes such bending is the *ionosphere*, a region in the upper atmosphere where free ions and electrons exist in sufficient quantity to cause a change in the refractive index. Ultraviolet radiation from the sun is considered to be responsible for the ionization. The ionosphere is not a single region but consists of a series of "layers" which occur at different heights, each layer consisting of a central region of ionization which tapers off in intensity both above and below.

Refraction, absorption, reflection — For a given intensity of ionization, the amount of refraction becomes less as the frequency of the wave becomes higher (shorter wavelength). The bending therefore is smaller at high than at low frequencies, and if the frequency is raised to a high-enough value the bending eventually will become too slight to bring the wave back to earth, even when it enters the ionosphere at a very small angle to the "edge" of the ionized zone. At this and higher frequencies long-distance communication becomes impossible.

The greater the intensity of ionization, the greater the bending on a given frequency. Thus an increase in ionization increases the maximum frequency which can be bent sufficiently for long-distance communication. The wave loses some energy in the ionosphere, and this energy loss increases with ionization density and the wavelength. Unusually high ionization may cause complete absorption of the wave energy, especially when the ionization is high in the lower regions of the ionosphere and below the lowest normally useful layer. When the wave is absorbed in the ionosphere it is no more useful for communication than if it had passed through without sufficient bending to bring it back to earth.

In addition to refraction, reflection may take place at the lower boundary of a layer if that boundary is well-defined; i.e., if there is an appreciable change in ionization within a relatively short interval of distance. For waves approaching the layer at or near the perpendicular, the change in ionization must take place within a difference in height comparable to the wavelength, hence reflection is more apt to occur at longer wavelengths (lower frequencies).

Critical frequency — When the frequency is low enough, a wave sent vertically upward to the ionosphere will be bent sufficiently to return to the transmitting point. The highest frequency at which this occurs, for a given state of the ionosphere, is called the *critical frequency*. It serves as an index for transmission conditions, although it is not the highest *useful* frequency since waves which enter the ionosphere at smaller angles than 90 degrees (vertical) will be bent sufficiently to return to earth. The maximum usable frequency, for waves leaving the earth at very small angles to the horizontal, is in the vicinity of three times the critical frequency.

Besides being directly observable, the critical frequency is of more practical interest than the ionization density because it includes the effects of absorption as well as refraction.

Virtual height — Although a layer is a region of considerable depth it is convenient to assign to it a definite height, called the *virtual height*. The virtual height is the height from

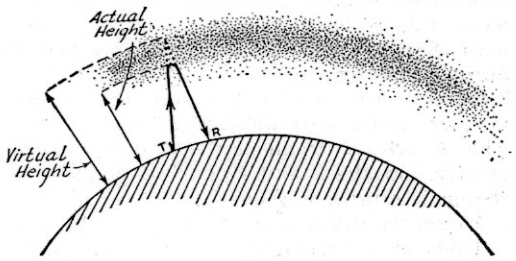

Fig. 902 — Showing bending in the ionosphere and the echo or reflection method of determining virtual height.

which a pure reflection would give the same effect as the refraction which actually takes place. This is illustrated in Fig. 902. The wave traveling upward is bent back over a path having appreciable radius of turning, and a measurable interval of time is consumed in the turning process. The virtual height is the height of a triangle formed as shown, having equal sides of a total length equivalent to the time taken for the wave to travel from T to R.

The E layer — The lowest normally useful layer is called the E layer. Its average height (maximum ionization) is about 70 miles. The ionization density is greatest around local noon, and the layer is only weakly ionized at night when the radiation from the sun is not present. This is because the air at this height is sufficiently dense so that free ions and electrons very quickly meet and recombine.

The F, F_1 and F_2 layers — The second principal layer is the F, which is at a height of about 175 miles at night. In this region the air is so thin that recombination of ions and electrons takes place very slowly, since the particles can travel relatively great distances before meeting. The ionization decreases after sundown, reaching a minimum just before sunrise. In the day-

time the F layer splits into two layers, the F_1 and F_2, at average virtual heights of about 140 miles for the F_1 and 200 miles for the F_2. These are most highly ionized at about local noon, and merge again at sunset into the F layer.

Seasonal effects — In addition to day and night variations, there are also seasonal changes in the ionosphere as the quantity of radiation received from the sun changes. Thus the E layer has higher critical frequencies in the summer (about 4 Mc., average, in daytime) than in the winter, when the critical frequency is near 3 Mc. The F layer shows little variation, the critical frequency being of the order of 4 to 5 Mc. in the evening. The F_1 layer, which has a critical frequency in the neighborhood of 5 Mc. in summer, usually disappears in winter. The critical frequencies are highest in the F_2 layer in winter (11 to 12 Mc.) and lowest in summer (around 7 Mc.). The virtual height of the F_2 layer is also less in winter (about 185 miles) than in summer (average 250 miles).

In the spring and fall a transition period occurs, and conditions in the ionosphere are more variable at these times of the year.

Sunspot cycles — The critical frequencies mentioned in the preceding paragraph are mean values, since the ionization also varies with the 11-year sunspot cycle, being higher during times of greatest sunspot activity. Critical frequencies are highest during sunspot maxima and lowest during sunspot minima. The E critical frequency does not change greatly, but the F and F_2 critical frequencies change in a ratio of about 2 to 1.

Magnetic storms and other disturbances — Unusual disturbances in the earth's magnetic field (magnetic storms) usually are accompanied by disturbances in the ionosphere, when the layers apparently break up and expand. Usually there is also an increase in absorption during such a period. Radio transmission is poor and there is a drop in critical frequencies, so that lower frequencies must be used. Such a storm may last for several days.

Unusually high ionization in the region of the atmosphere below the normal ionosphere may increase absorption to such an extent that sky-wave transmission becomes impossible on high frequencies. The length of such a disturbance may be several hours, with a gradual falling off of transmission conditions at the beginning and an equally gradual building up at the end of the period. *Fadeouts*, similar to the above in effect, are caused by sudden disturbances on the sun. Characterized by very rapid ionization, with sky-wave transmission disappearing almost instantly, they occur only during daylight and do not last as long as the first type.

¶ 9-4 The Sky Wave

Wave angle (angle of radiation) — The smaller the angle at which the wave leaves the earth, the smaller the bending required in the ionosphere to bring it back and, in general, the greater the distance between the point where it leaves the earth and that at which it returns (§ 9-3). This is shown in Fig. 903. The vertical angle which the wave makes with a tangent to the earth is called the *wave angle* or *angle of radiation*, the latter term being used more in connection with transmitting than with receiving.

Skip distance — Since more bending is required to return the wave to earth when the wave angle is high, it is found that at high frequencies the refraction frequently is not great enough to give the required bending unless the wave angle is smaller than a certain angle, called the *critical angle*. This is shown in Fig. 903, where wave angles A and lower give useful signals but waves sent at higher angles travel through the layer and do not return. The distance between T and R_1 is, therefore, the shortest possible distance over which sky-wave communication can be carried on. The area between the end of the useful ground wave and the beginning of sky-wave reception is called the *skip zone*. The skip distance depends upon the frequency and the state of the ionosphere, and is greater the higher the transmitting frequency and the lower the critical frequency (§ 9-3). It depends also upon the height of the layer in which the refraction takes place, the higher layers giving longer distances for the same wave angle. The wave angles at the transmitting and receiving points are usually, although not necessarily, approximately the same for a given wave path.

It is readily possible for the sky wave to pass through the E layer and be refracted back to earth from the F, F_1 or F_2 layers. This is because the critical frequencies are higher in the latter layers, so that a signal too high in frequency to be returned by the E layer can still come back from the F_1, F_2 or F, depending

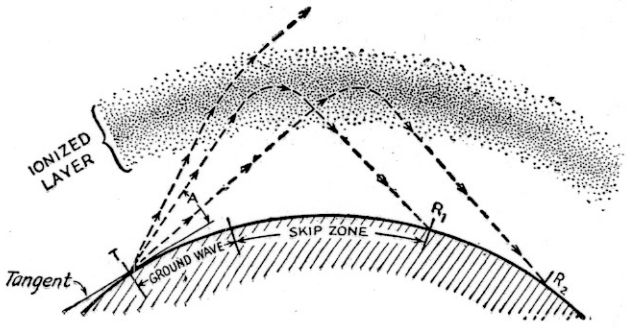

Fig. 903 — Refraction of sky waves, showing the critical wave angle and the skip zone. Waves leaving the transmitter at angles above the critical (greater than A) are not bent enough to be returned to earth. As the angle is increased, the waves return to earth at increasingly greater distances. Below a certain minimum angle (less than A) the waves do not ever return to earth.

upon the time of day and the conditions existing. Depending upon the wave angle and the frequency, it is also possible to carry on communication via either the E or F_1-F_2 layers on the same frequency.

Multi-hop transmission — On returning to earth the wave can be reflected (§ 9-1) upward and travel again to the ionosphere, where refraction once more takes place, again with bending back to the earth. This process, which can be repeated several times, is necessary for transmission over great distances because of the limited heights of the layers and the curvature of the earth, since at the lowest useful wave angles (of the order of a few degrees, waves at smaller angles generally being absorbed rapidly at high frequencies by being in contact with the earth) the maximum one-hop distance is about 1250 miles with refraction from the E layer and around 2500 miles from the F_2 layer. Ground losses absorb some of the energy from the wave on reflection, the amount of loss varying with the type of ground and being least for reflection from sea water. When the distance permits it is better to have one hop rather than several, since the multiple reflections introduce losses which are higher than those caused by the ionosphere.

Fading — Two or more parts of the wave may follow slightly different paths in traveling to the receiving point, in which case the difference in path lengths will cause a phase difference to exist between the wave components at the receiving antenna. The field strength therefore may have any value between the numerical sum of the components (when they are all in phase) and zero (when there are only two components and they are exactly out of phase). Since the paths change from time to time, this causes a variation in signal strength called *fading*. Fading also can result from the combination of single-hop and multi-hop waves, or the combination of a ground wave and sky wave. The latter condition gives rise to an area of severe fading near the limiting distance of the ground wave, better reception being obtained at both shorter and longer distances where one component or the other is considerably stronger. Fading may be rapid or slow, the former type usually resulting from rapidly changing conditions in the ionosphere, the latter occurring when transmission conditions are relatively stable.

¶ 9-5 Very-High-Frequency Propagation

Direct ray — In the very-high-frequency portion of the spectrum (above 30 Mc.), the bending of the waves in the normal ionosphere layers is so slight that the sky wave (§ 9-4) does not ordinarily play any part in communication. The ground-wave (§ 9-2) range also is extremely limited, because of high absorption in the ground at these frequencies. Normal v.h.f. transmission is by means of a *direct ray*, or wave traveling directly from the transmitter to the receiver through the atmosphere. Since the energy lost in ground absorption by a wave traveling close to the ground decreases very rapidly with its height in wavelengths above ground, a very-high-frequency wave can be relatively close (in physical height) to the ground without suffering the absorption effects which would occur at the same physical heights with longer wavelengths.

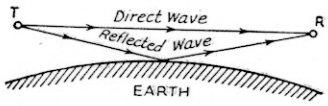

Fig. 905 — Showing how both direct and reflected waves may be received simultaneously in v.h.f. transmission.

Since the wave travels practically in a straight line, the maximum signal strength can be obtained only when there is an unobstructed atmospheric path between the transmitter and receiver. This means that the transmitting and receiving points should be sufficiently high to provide such a path, and on long paths the curvature of the earth as well as the intervening terrain must be taken into account.

Reflected ray—In addition to the direct ray, part of the wave strikes the ground between the transmitter and receiver and is reflected upward at a slight angle, producing a *reflected-ray* component at the receiver. This is shown in Fig. 905. The reflected ray is more or less out of phase with the direct ray, hence the net field strength at the receiving point is less than that of the direct ray alone. The canceling effect of the reflected ray depends upon the heights of the transmitter and receiver above the point of reflection, the ground losses when reflection takes place, and the frequency, decreasing with an increase in any of these.

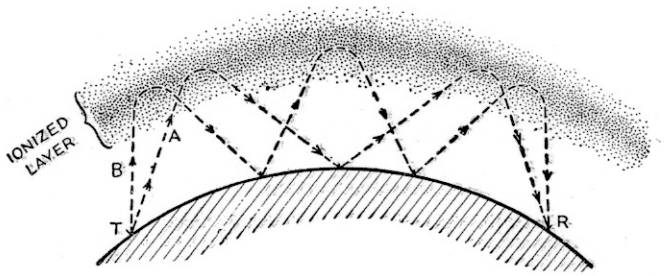

Fig. 904 — Multi-hop transmission, showing two- and three-hop paths. A high-angle wave may be reflected upward from the ground and then refracted again to appear at the receiving point, R (two-hop transmission). If the angle of the wave is high enough, the process may be repeated several times.

Atmospheric refraction — There is normally some change in the refractive index of the air with height above ground, its nature being such as to cause the waves to bend slightly towards the ground. Where curvature of the earth must be considered, this has the effect of lengthening the distance over which it is possible to transmit a direct ray. It is convenient to consider the effect of this "normal" refraction as equivalent to an increase in the earth's radius, in determining the transmitting and receiving heights necessary to provide a clear path for the wave. The equivalent radius, taking refraction into account, is 4/3 the actual radius.

Range vs. height — The height required to provide a clear path ("line of sight") over level ground from an elevated transmitting point to a receiving point on the surface, not including the effect of refraction, is

$$h = \frac{d^2}{1.51}$$

where h is the height in feet and d the distance in miles. Conversely, the line of sight distance in miles for a given height in feet is equal to $1.23\sqrt{h}$. Taking refraction into account, this equation becomes $1.41\sqrt{h}$. Fig. 906 gives the answer directly when one quantity is known.

When transmitter and receiver both are elevated, the maximum direct-ray distance to ground level as given by the formulas can be determined separately for each. Adding together the two distances so obtained will give the maximum distance by which they can be separated for direct-ray communication. This is shown in Fig. 907.

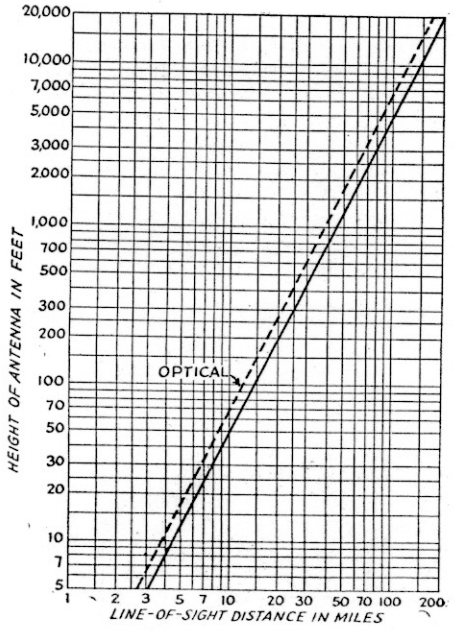

Fig. 906 — Chart for determining line-of-sight distance for v.h.f. transmission. The solid line includes effect of refraction, while the dotted line is the optical distance.

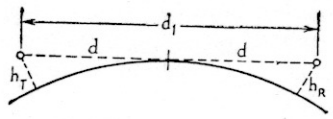

Fig. 907 — Method of determining total line-of-sight distance when both transmitter and receiver are elevated, based on Fig. 906. Since only earth curvature is taken into account in Fig. 906, irregularities in the ground between the transmitting and receiving points must be considered when computing each actual path.

Diffraction — At distances beyond the direct-ray path the wave is diffracted around the curvature of the earth. The diffracted wave is attenuated very rapidly, so that beyond the maximum direct-ray distance the signal strength decreases considerably faster with distance than it does within the direct-ray or line-of-sight path.

¶ 9-6 Troposphere Refraction

Temperature inversions — The refractive index of the lower atmosphere depends principally upon the temperature, moisture content, and pressure. Of the three, only temperature differences cause a large enough change in refractive index to refract very-high frequency waves in such a way as to extend the distance range beyond the normal direct-ray and diffracted-wave ranges discussed in the preceding section. This occurs when there is a "temperature inversion," or a layer of warm air over cooler air near the ground. Temperature inversions are relatively frequent in the summer, and usually occur at heights from a few thousand feet to two miles or so above the ground.

Lower atmosphere bending — When there is a sufficiently marked temperature inversion, i.e., a rapid rise of temperature with height, a wave is refracted back to earth in much the same way as in the ionosphere, although the cause of the change in refractive index is different. The amount of bending is small compared to the bending in the ionosphere. Consequently, the wave angle (§ 9-4) must be quite low (zero or nearly so), but since the bending takes place at a low altitude it is possible to extend the range of v.h.f. signals to several hundred miles when both transmitter and receiver are well below the line of sight.

Fig. 908 illustrates the conditions existing when the air is "normal" and when a temperature inversion is present. Since the bending is relatively small it is advantageous to have as much height as possible at both the receiving and transmitting points, even though these heights may be considerably less than those necessary for "line-of-sight" transmission.

Frequency effects — The amount of bending is greater at longer wavelengths (lower frequencies) but is not usually observed at frequencies much below 28 Mc., partly because it is masked by other effects. The upper limit of frequency at which useful bending ceases is not known, but transmission by this means is frequent on 56 and 112 Mc.

¶ 9-7 Sporadic-E Ionization

Description — Under certain conditions small regions or "patches" of unusually dense ionization may appear in the *E* layer of the ionosphere, for reasons not yet clearly understood. This is known as *sporadic-E* ionization, and the change in refractive index in such a patch or cloud frequently is great enough to cause waves having frequencies as high as 60 Mc. to be bent back to earth. The dimensions of a sporadic-*E* cloud are relatively small, hence communication by means of it is restricted to transmitting and receiving localities so situated with respect to the cloud and to each other that a refracted wave path is possible.

The abnormal ionization usually disappears in the course of a few hours. Sporadic-*E* ionization is more frequent in the summer than in the winter, and may occur at any time of the day or night.

Transmission characteristics — Sporadic-*E* refraction may take place at all frequencies up to the region of 60 Mc. At the present time there are no known cases of such refraction on 112 Mc. When sporadic-*E* ionization is present skip distance is greatly reduced (when a wavepath via the cloud is possible to a given receiving location) on the frequencies where transmission normally is by means of the *F*, F_1 and F_2 layers; that is, from about 3.5 to 30 Mc. at night. The skip zone may in fact disappear entirely over most of the high-frequency spectrum, since the critical frequencies may rise to as high as 12 Mc. for sporadic-*E* refraction.

At very-high frequencies the bending is relatively small compared to lower frequencies, and only wave angles of the order of 5 degrees and less are useful in most cases. The transmitting and receiving points thus must be sufficiently distant from the cloud to enable a wave leaving the transmitter at such angles to strike it, and the cloud should be approximately on, and near the center of, the line joining the transmitter and receiver. Unless the ionization is extremely intense, the minimum distance of transmission on 56 Mc. is of the order of 800 miles and the maximum distance about 1250 miles.

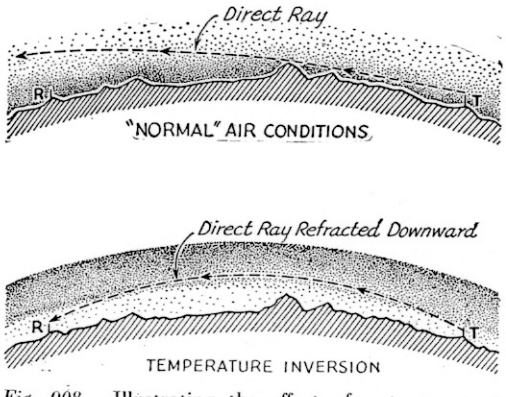

Fig. 908 — Illustrating the effect of a temperature inversion in extending the range of v.h.f. signals.

Multi-hop transmission by means of two sporadic-*E* clouds properly situated with respect to a transmitter and receiver is possible, but rather rare. Distances up to 2500 miles or so have been attained on 56 Mc. by this means.

¶ 9-8 Optimum Wave Angles

One of the requirements in high-frequency radio transmission is to send a wave to the ionosphere in such a way that it will have the best chance of being returned to earth. This is chiefly a matter of the angle at which the wave enters the layer, although in some cases polarization may be of importance. Furthermore, the desirable conditions may change considerably with frequency.

The desirable conditions for waves of different frequencies can be summarized as follows, in terms of the various amateur bands:

1.75 Mc. — Low-angle radiation is indicated for the longer distances. High-angle radiation may cause fading toward the limit of the ground-wave signal, because the downcoming waves add in random phase to the ground wave. Vertical polarization is to be preferred.

3.5 Mc. — As at 1.75 Mc., waves at all angles of radiation usually will be reflected, so that no energy is lost by high-angle radiation. However, the lower-angle waves will, in general, give the greatest distances. Polarization on this band is not of great importance.

7 Mc. — Under most conditions, angles of radiation up to about 45 degrees will be returned to earth; during the sunspot maximum still higher angles are useful. It is best to concentrate the radiation below 45 degrees. Polarization is not important, except that losses probably will be higher with vertical polarization.

14 Mc. — For long-distance transmission, most of the energy should be concentrated at angles below about 20 degrees. Higher angles are useful for comparatively short distances (300–400 miles), although 30 degrees is about the maximum useful angle. Aside from the probable higher losses with vertical polarization, the polarization may be of any type.

28 Mc. — Angles of 10 degrees or less are most useful. As in the case of 14 Mc., polarization is not important.

56 Mc. — The lowest possible angle of radiation is most useful for all types of transmission. Vertical polarization has been chiefly used for line-of-sight and lower atmosphere transmission, although horizontal polarization may be slightly better for long distances. In any event, the *same* polarization should be used at both transmitter and receiver.

Higher frequencies — The relatively small amount of data indicates that, as in the case of 56 Mc. optical and lower-atmosphere transmission, either horizontal or vertical polarization may be used, so long as the same type is employed at both ends of the circuit.

CHAPTER TEN

Antenna Systems

¶ 10-1 Antenna Properties

Wave propagation and antenna design — For most effective transmission, the propagation characteristics of the frequency under consideration must be given due consideration in selecting the type of antenna to use. These have been discussed in Chapter Nine. On some frequencies the angle of radiation and polarization may be of relatively little importance; on others they may be all-important. On a given frequency, the particular type of antenna best suited for long-distance transmission may not be as good for shorter-range work as would a different type.

The important properties of an antenna or antenna system are its polarization, angle of radiation, impedance, and directivity.

Polarization — The polarization of a straight-wire antenna is its position with respect to the earth. That is, a vertical wire transmits vertically polarized waves and a horizontal antenna generates horizontally polarized waves (§ 9-1). The wave from an antenna in a slanting position contains both vertical and horizontal components.

Angle of radiation — The wave angle (§ 9-4) at which an antenna radiates best is determined by its polarization, height above ground, and the nature of the ground. Radiation is not all at one well-defined angle, but rather is dispersed over a more or less large angular region, depending upon the type of antenna. The angle is measured in a vertical plane with respect to a tangent to the earth at the transmitting point.

Impedance — The impedance (§ 2-8) of the antenna at any point is the ratio of voltage to current at that point. It is important in connection with feeding power to the antenna, since it constitutes the load resistance represented by the antenna. At high frequencies the antenna impedance consists chiefly of radiation resistance (§ 2-12). It is understood to be measured at a current loop (§ 2-12), unless otherwise specified.

Directivity — All antennas radiate more power in certain directions than in others. This characteristic, called *directivity*, must be considered in three dimensions, since directivity exists in the vertical plane as well as in the horizontal plane. Thus, the directivity of the antenna will affect the wave angle as well as the actual compass directions in which maximum transmission takes place.

Current — The field strength produced by an antenna is proportional to the current flowing in it. Since standing waves generally are present on an antenna, the parts of the wire carrying the higher current therefore have the greatest radiating effect.

Power gain — The ratio of power required to produce a given field strength, with a "comparison" antenna, to the power required to produce the same field strength with a specified type of antenna is called the *power gain* of the latter antenna. The term is used in connection with antennas intentionally designed to have directivity, and the field is measured in the optimum direction of the antenna under test. The comparison antenna almost always is a half-wave antenna having the same polarization as the antenna under consideration. Power gain usually is expressed in decibels (§ 3-3).

¶ 10-2 The Half-Wave Antenna

Physical and electrical length — The fundamental form of antenna is a single wire whose length is approximately equal to half the transmitting wavelength. It is the unit from which many more complex forms of antennas are constructed. It is sometimes known as a *Hertz* or *doublet* antenna.

The length of a half wave in space is:

$$Length\ (feet) = \frac{492}{Freq.\ (Mc.)} \qquad (1)$$

The actual length of a half-wave antenna will not be exactly equal to the half wave in space, but is usually about 5 per cent less because of capacitance at the ends of the wire (*end effect*). The reduction factor increases slightly as the frequency is increased. Under average conditions the following formula will give the length of a half-wave antenna to sufficient accuracy for frequencies up to 30 Mc.:

$$Length\ of\ half\text{-}wave\ antenna\ (feet) = \frac{492 \times 0.95}{Freq.\ (Mc.)} = \frac{468}{Freq.\ (Mc.)} \qquad (2)$$

At 56 Mc. and higher frequencies the somewhat larger end effects cause a slightly greater reduction in length, so that, for these higher frequencies,

$$Length\ of\ half\text{-}wave\ antenna\ (feet) = \frac{492 \times 0.94}{Freq.\ (Mc.)} = \frac{462}{Freq.\ (Mc.)}, \qquad (3)$$

$$or\ length\ (inches) = \frac{5540}{Freq.\ (Mc.)} \qquad (4)$$

Current and voltage distribution — When power is fed to such an antenna the current and voltage vary along its length (§ 2-12). The

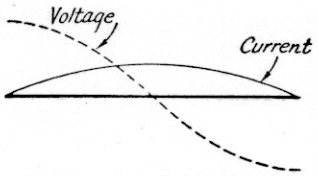

Fig. 1001 — Current and voltage distribution on a half-wave antenna. Current is maximum in center, nearly zero at ends. Voltage distribution is just the opposite.

distribution, which is practically a sine curve, is shown in Fig. 1001. The current is maximum at the center and nearly zero at the ends, while the opposite is true of the r.f. voltage. The current does not actually reach zero at the current *nodes* (§ 2-12), because of the end effect; similarly, the voltage is not zero at its node because of the resistance of the antenna, which consists of both the r.f. resistance of the wire (*ohmic resistance*) and the radiation resistance (§ 2-12). Usually the ohmic resistance of a half-wave antenna is small enough, in comparison with the radiation resistance, to be neglected for all practical purposes.

Impedance — The radiation resistance of a half-wave antenna in free space — that is, sufficiently removed from surrounding objects so that they do not affect the antenna's characteristics — is 73 ohms, approximately. The value under practical conditions will vary with the height of the antenna, but is commonly taken to be in the neighborhood of 70 ohms. It is pure resistance, and is measured at the center of the antenna. The impedance is minimum at the center, where it is equal to the radiation resistance, and increases toward the ends (§ 10-1). The actual value at the ends will depend on a number of factors, such as the height, the physical construction, and the position with respect to ground.

Conductor size — The impedance of the antenna also depends upon the diameter of the conductor in relation to its length. The figures above are for wires of practicable sizes. If the diameter of the conductor is made large, of the order of 1 per cent or more of the length, the impedance at the center will be raised and the impedance at the ends decreased. This increase in center impedance (of the order of 50 per cent for a diameter/length ratio of 0.025) is accompanied by a decrease in the Q (§ 2-10, 2-12) of the antenna, so that the resonance curve is less sharp. Hence, the antenna is capable of working over a wider frequency range. This effect is greater as the diameter/length ratio is increased, and is a property of some importance at the very-high frequencies where the wavelength is small.

Radiation characteristics — The radiation from a half-wave antenna is not uniform in all directions but varies with the angle with respect to the axis of the wire. It is most intense in directions at right-angles to the wire and zero along the direction of the wire itself, with intermediate values at intermediate angles. This is shown by the sketch of Fig. 1002, which represents the radiation pattern in free space. The relative intensity of radiation is proportional to the length of a line drawn from the center of the figure to the perimeter. If the antenna is vertical, as shown in the figure, then the field strength (§ 9-1) will be uniform in all horizontal directions; if the antenna is horizontal, the relative field strength will depend upon the direction of the receiving point with respect to the direction of the antenna wire.

¶ 10-3 Ground Effects

Reflection — When the antenna is near the ground the free-space pattern of Fig. 1002 is modified by reflection of radiated waves from the ground, so that the actual pattern is the resultant of the free-space pattern and ground reflections. This resultant is dependent upon the height of the antenna, its position or orientation with respect to the surface of the ground, and the electrical characteristics of the ground. The reflected waves may be in such phase relationship to the directly radiated waves that the two completely reinforce each other, or the phase relationship may be such that complete cancellation takes place. All intermediate values also are possible. Thus, the effect of a perfectly reflecting ground is such that the original free-space field strength may be multiplied by a factor which has a maximum value of 2, for complete reinforcement, and having all intermediate values to zero, for complete cancellation. Since waves are always reflected upward from the ground (assuming that the surface is fairly level), these reflections only affect the radiation pattern in the vertical plane — that is, in directions upward from the earth's surface — and not in the horizontal plane, or the usual geographical directions.

Fig. 1003 shows how the multiplying factor varies with the vertical angle for several representative heights for horizontal antennas. As the height is increased the angle at which complete reinforcement takes place is lowered, until for a height equal to one wavelength it occurs at a vertical angle of 15 degrees. At still greater heights, not shown on the chart, the first maximum will occur at still smaller angles.

When the half-wave antenna is vertical the maximum and minimum points in the curves of Fig. 1003 exchange positions, so that the nulls become maxima, and vice versa. In this

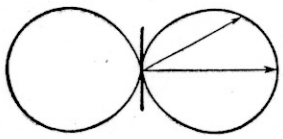

Fig. 1002 — The free-space radiation pattern of a half-wave antenna. The antenna is shown in the vertical position. This is a cross-section of the solid pattern described by the figure when rotated on its vertical axis. The "doughnut" form of the solid pattern can be more easily visualized by imagining the drawing glued to a piece of cardboard, with a short length of wire fastened on it to represent the antenna. Twirling the wire will give a visual representation of the solid radiation pattern.

case, the height is taken as the distance from ground to the center of the antenna.

Radiation angle — The vertical angle, or angle of radiation, is of primary importance, especially at the higher frequencies (§ 9-4, 9-5).

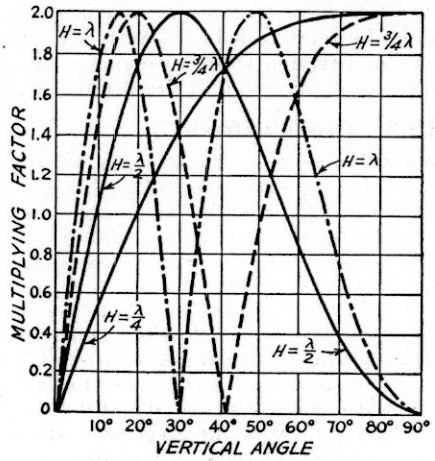

Fig. 1003 — Effect of ground on radiation of horizontal antennas at vertical angles for four antenna heights. This chart is based on perfectly conducting ground.

It is advantageous, therefore, to erect the antenna at a height which will take advantage of ground reflection in such a way as to reinforce the space radiation at the most desirable angle. Since low radiation angles usually are desirable, this generally means that the antenna should be high — at least ½ wavelength at 14 Mc., and preferably ¾ or 1 wavelength; at least 1 wavelength, and preferably higher, at 28 Mc. and the very-high frequencies. The physical height decreases as the frequency is increased, so that good heights are not impracticable; a half wavelength at 14 Mc. is only 35 feet, approximately, while the same height represents a full wavelength at 28 Mc. At 7 Mc. and lower frequencies the higher radiation angles are effective, so that again a reasonable antenna height is not difficult of attainment. Heights between 35 and 70 feet are suitable for all bands, the higher figures generally being preferable where circumstances permit their use.

Imperfect ground — Fig. 1003 is based on ground having perfect conductivity, which is not met with in practice. The principal effect of actual ground is to make the curves inaccurate at the lowest angles; appreciable high-frequency radiation at angles smaller than a few degrees is practically impossible to obtain at heights of less than several wavelengths. Above 15 degrees, however, the curves are accurate enough for all practical purposes, and may be taken as indicative of the sort of result to be expected at angles between 5 and 15 degrees.

The effective ground plane — that is, the plane from which ground reflections can be considered to take place — seldom is the actual surface of the ground but is a few feet below it, depending upon the character of the soil.

Impedance — Waves which are reflected directly upward from the ground induce a current in the antenna in passing, and, depending on the antenna height, the phase relationship of this induced current to the original current may be such as either to increase or decrease the total current in the antenna. For the same power input to the antenna, an increase in current is equivalent to a decrease in impedance, and vice versa. Hence, the impedance of the antenna varies with height. The theoretical curve of variation of radiation resistance for an antenna above perfectly reflecting ground is shown in Fig. 1004. The impedance approaches the free-space value as the height becomes large, but at low heights may differ considerably from it.

Choice of polarization — Polarization of the transmitting antenna is generally unimportant on frequencies between 3.5 and 30 Mc. However, the question of whether the antenna should be installed in a horizontal or vertical position deserves consideration for other reasons. A vertical half-wave antenna will radiate equally well in all *horizontal* directions, so that it is substantially non-directional, in the usual sense of the word. If installed horizontally, however, the antenna will tend to show directional effects, and will radiate best in the direction at right angles, or broadside, to the wire. The radiation in such a case will be least in the direction toward which the wire points. This can be readily seen by imagining that Fig. 1002 is lying on the ground, and that the pattern is looked at from above.

The vertical angle of radiation also will be affected by the position of the antenna. If it were not for ground losses at high frequencies, the vertical half-wave antenna would be preferred because it would concentrate the radiation horizontally. In practice, however, this theoretical advantage over the horizontal antenna is of little or no consequence.

At 1.75 Mc., vertical polarization will give more low-angle radiation, and hence is better for long-distance transmission; at this fre-

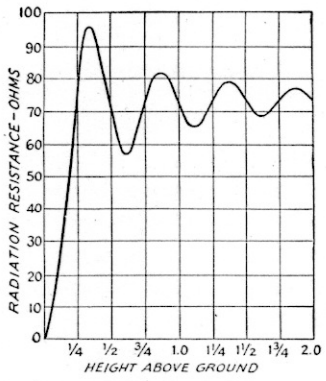

Fig. 1004 — Theoretical curve of variation of radiation resistance for a half-wave horizontal antenna, as a function of height above perfectly reflecting ground.

quency the ground wave also is useful, and must be vertically polarized. On very-high frequencies, direct-ray and lower troposphere transmission require the same type of polarization at both receiver and transmitter, since the waves suffer no appreciable change in polarization in transmission (§ 9-5, 9-6). Either vertical or horizontal polarization may be used, the latter being slightly better for longer distances.

Effective radiation patterns — In determining the radiation pattern it is necessary to consider radiation in both the horizontal and vertical planes. When the half-wave antenna is vertical, the vertical angle of radiation chosen does not affect the *shape* of the horizontal pattern, but only its relative amplitude. When the antenna is horizontal, however, both the shape and amplitude are dependent upon the angle of radiation chosen.

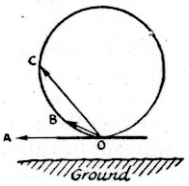

Fig. 1005 — Illustrating the importance of vertical angle of radiation in determining antenna directional effects. Ground reflection is neglected in this drawing of the free-space field pattern of a horizontal antenna.

Fig. 1005 illustrates this point. The "free-space" pattern of the horizontal antenna shown is a section cut vertically through the solid pattern. In the direction *OA*, horizontally along the wire axis, the radiation is zero. At some vertical angle, however, represented by the line *OB*, the radiation is appreciable, despite the fact that this line runs *in the same geographical direction* as *OA*. At some higher angle, *OC*, the radiation, *still in the same geographical direction*, is still more intense. The effective radiation pattern therefore depends upon which angle of radiation is most useful, and for long-distance transmission is dependent upon the conditions existing in the ionosphere. These conditions may vary not only from day to day and hour to hour, but even from minute to minute. Obviously, then, the effective directivity of the antenna will change along with transmission conditions.

At very-high frequencies, where only extremely low angles are useful for any but sporadic-*E* transmission (§ 9-7), the effective radiation pattern of the antenna approaches the free-space pattern. A horizontal antenna therefore shows more marked directive effects than it does at lower frequencies, on which high radiation angles are effective.

Theoretical horizontal-directivity patterns for half-wave horizontal antennas at vertical angles of 9, 15, and 30 degrees (representing average useful angles at 28, 14 and 7 Mc. respectively) are given in Fig. 1006. At intermediate angles the values in the affected regions also will be intermediate. Relative field strengths are plotted on a decibel scale (§ 3-3), so that they represent as nearly as possible the actual aural effect at the receiving station.

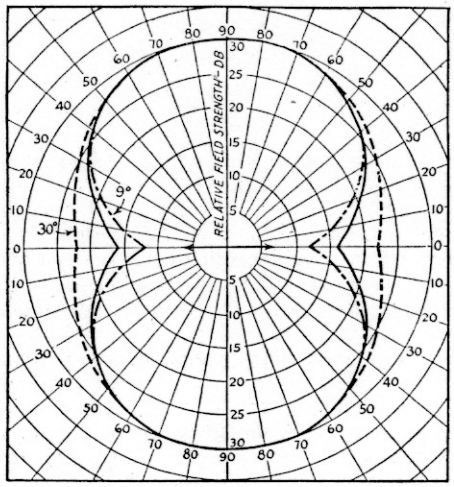

Fig. 1006 — Horizontal pattern of a horizontal half-wave antenna at three vertical radiation angles. The solid line is relative radiation at 15 degrees. Dotted lines show deviation from the 15-degree pattern for angles of 9 and 30 degrees. The patterns are useful for shape only, since the amplitude will depend upon the height of the antenna above ground and the vertical angle considered. The patterns for all three angles have been proportioned to the same scale, but this does not mean that the maximum amplitudes necessarily will be the same. The arrow indicates the direction of the horizontal antenna wire.

10-4 Applying Power to the Antenna

Direct excitation — When power is transferred directly from the source to the radiating antenna, the antenna is said to be directly excited. While almost any coupling method (§ 2-11) may be used, those most commonly employed are shown in Fig. 1007. Power usually is fed to the antenna at either a current or voltage loop (§ 10-2). If power is fed at a current loop, the coupling method is called *current feed;* if at a voltage loop, the method is called *voltage feed.*

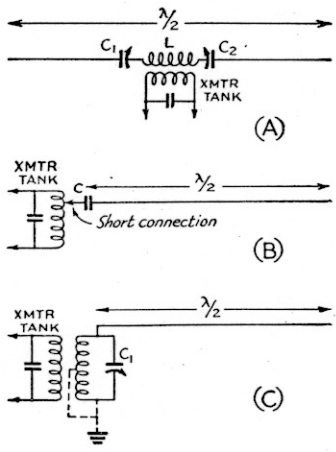

Fig. 1007 — Methods of directly exciting the half-wave antenna. A, current feed, series tuning; B, voltage feed, capacity coupling; C, voltage feed, with an inductively coupled antenna tank. In A, the coupling circuit is not included in the effective electrical length of the antenna.

Current feed — This method is shown in Fig. 1007-A. The antenna is cut at the center and a small coil coupled to the output tank circuit of the transmitter, with adjustable coupling so that the transmitter loading can be controlled. Since the addition of the coil "loads" the antenna, or increases its effective length because of the additional inductance, the series condensers, C_1 and C_2, are used to provide electrical means for reducing the length to its original unloaded value; in other words, their capacitive reactance serves to cancel the effect of the inductive reactance of the coil (§ 2-10).

Voltage feed — In Fig. 1007, at B and C the power is introduced into the antenna at a point of high voltage. In B, the end of the antenna is coupled to the output tank circuit through a small condenser, C; in C, a separate tank circuit, connected directly to the antenna, is used. This tank is tuned to the transmitter frequency, and should be grounded at one end or at the center of the coil, as shown.

Adjustment of coupling — Methods of tuning and adjustment of direct-feed systems correspond to those used with transmission lines, which are discussed in § 10-6.

Disadvantages of direct excitation — Direct excitation seldom is used except on the lowest amateur frequencies, because it involves bringing the antenna proper into the operating room and hence into close relationship with the house and electric wiring. This usually means that some of the power is wasted in heating poor conductors in the field of the antenna. Also, it often means that the shape of the antenna must be distorted, so that the expected directional effects are not realized, and likewise that the height will be limited. For these reasons, in high-frequency work practically all amateurs use transmission lines or feeder systems, which permit placing the antenna in a desirable location.

¶ 10-5 Transmission Lines

Requirements — A transmission line is used to transfer power, with a minimum of loss, from its source to the device in which the power is to be usefully expended. At radio frequencies, where every wire carrying r.f. current tends to radiate energy in the form of electromagnetic waves, special design is necessary to minimize radiation and thus cause as much of the power as possible to be delivered to the receiving end of the line.

Radiation can be minimized by using a line in which the current is low, and by using two conductors carrying currents of equal magnitudes but opposite phase so that the fields about the conductors cancel each other. For good cancellation of radiation, the two conductors should be kept parallel and quite close to each other.

Types — The most common form of transmission line consists of two parallel wires, maintained at a fixed spacing of two to six inches by insulating spacers or spreaders placed at suitable intervals (*open-wire line*). A second type consists of rubber-insulated wires twisted together to form a flexible line, without spacers (*twisted-pair line*). A third uses a wire inside of and coaxial with a tubing outer conductor, separated from the outer conductor by insulating spacers or "beads" at regular intervals (*coaxial* or *concentric line*). A variation of this type uses solid rubber insulation between the inner and outer conductors, the latter usually being made of metal braid rather than of solid tubing, so that the line will be flexible. Still another type of line uses only a single wire, without a second conductor (*single-wire feeder*); in this type, radiation is minimized by keeping the line current low.

Spacing of two-wire lines — The spacing between the wires of an open-wire line should be small in comparison to the operating wavelength, to prevent appreciable radiation. It is impracticable to make the spacing too small, however, because when the wires swing with respect to each other in a wind the line constants (§ 21-2) will vary, and thus cause a variation in tuning or loading on the transmitter. It is also desirable to use as few insulating spacers as possible, to keep the weight of the line to a minimum. In practice, a spacing of about six inches is used for 14 Mc. and lower frequencies, with four- and two-inch spacings being common on the very-high frequencies.

Balance to ground — For maximum cancellation of the fields about the two wires, it is necessary that the currents be equal in amplitude and opposite in phase. Should the capacity or inductance per unit length in one wire differ from that in the other, this condition cannot be fulfilled. Insofar as the line itself is concerned, the two wires will have identical characteristics only when the two have exactly the same physical relationships to ground and to other objects in the vicinity. Thus, the line should be symmetrically constructed and the two wires should be at the same height. Line unbalance can be minimized by keeping the line as far above the ground and as far from other objects as possible.

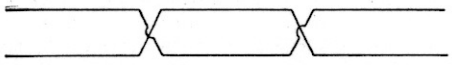

Fig. 1008 — Transposing a two-wire open transmission line preserves balance to ground and to near-by objects.

To overcome unbalance the line sometimes is transposed, which means that the positions of the wires are interchanged at regular intervals (Fig. 1008). This procedure is more helpful on long than on short lines, and usually need not be resorted to for lines less than a wavelength or so long.

Characteristic impedance — The square root of the ratio of inductance to capacity per unit length of the line is called the *characteristic* or *surge impedance*. It is the impedance

which a long line would present to an electrical impulse induced in the line, and is important in determining the operation of the line in conjunction with the apparatus to which it is connected.

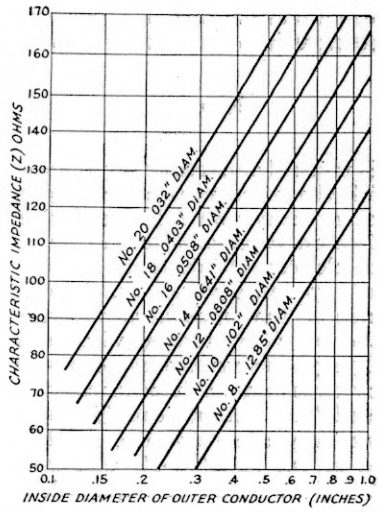

Fig. 1009 — Chart showing the characteristic impedances of typical spaced-conductor transmission lines.

The characteristic impedance of air-insulated transmission lines may be calculated from the following formulas:

Parallel-conductor line:

$$Z = 276 \log \frac{b}{a} \qquad (5)$$

where Z is the surge impedance, b the spacing, center to center, and a the radius of the conductor. The quantities b and a must be measured in the same units (inches, etc.). Surge impedance as a function of spacing for lines using conductors of different sizes is plotted in chart form in Fig. 1009.

Coaxial or concentric line:

$$Z = 138 \log \frac{b}{a} \qquad (6)$$

where Z again is the surge impedance. In this case, b is the *inside diameter* (not radius) of the outer conductor and a is the *outside diameter* of the inner conductor. The formula is true for having air as the dielectric, and approximately so for a line having ceramic insulators so spaced that the major proportion of the insulation is air.

The surge impedance for typical concentric lines using various sizes of conductors is given in Fig. 1010.

When a solid insulating material is used between the conductors, because of the increase in line capacity the impedance decreases by the factor $1/\sqrt{K}$, where K is the dielectric constant of the insulating material.

The impedance of a single-wire transmission line varies with the size of the conductor, its height above ground, and its orientation with respect to ground. An average figure is about 500 ohms.

Electrical length — The electrical length of a line is not exactly the same as its physical length, for reasons corresponding to those causing end effect in antennas (§ 10-2). Spacers used to separate the conductors have dielectric constants larger than that of air, so that the waves do not travel quite as fast along a line as they would in air. The lengths of electrical quarter waves of various types of lines can be calculated from the formula:

$$Length\ (feet) = \frac{246 \times V}{Freq.\ (Mc.)} \qquad (7)$$

where V depends upon the type of line. For lines of ordinary construction, V is as follows:

Parallel-wire line	$V = 0.975$
Parallel-tubing line	$V = 0.95$
Concentric line (air-insulated)	$V = 0.85$
Concentric line (rubber-insulated)	$V = 0.56$–0.65
Twisted pair	$V = 0.56$–0.65

Input and output ends — The input end of a line is that connected to the source of power; the output end is that connected to the power-absorbing device. When a line connects a transmitter to an antenna, the input end is at the transmitter and the output end at the antenna; with the same line and antenna connected to a receiver, however, the energy flows from the antenna to the receiver, hence the input end of the line is at the antenna and the output end at the receiver.

Standing-wave ratio — The lengths of transmission lines used at radio frequencies are of the same order as the operating wavelengths, and therefore standing waves of current and voltage may appear on the line

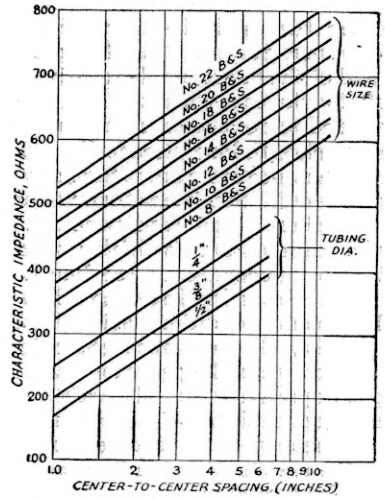

Fig. 1010 — The characteristic impedances of typical concentric lines. Tubing sizes are outside diameters.

(§ 2-12). The ratio of current (or voltage) at a loop to the value at a node (*standing-wave ratio*) depends upon the ratio of the resistance of the load connected to the output end of the line (its *termination*) to the characteristic impedance of the line itself. That is,

$$\textit{Standing-wave ratio} = \frac{Z_s}{Z_t} \text{ or } \frac{Z_t}{Z_s} \qquad (8)$$

where Z_s is the characteristic impedance of the line and Z_t is the terminating resistance. Z_t is generally called an impedance, although it must be non-reactive and therefore must correspond to a pure resistance for the line to operate as described. This means that, when the load or termination is an antenna, it must be resonant at the operating frequency.

The formula is given in two ways because it is customary to put the larger number in the numerator, so that the ratio will not be fractional. As an example, a 600-ohm line terminated in a resistance of 70 ohms will have a standing wave ratio of 600/70, or 8.57. The ratio on a 70-ohm line terminated in a resistance of 600 ohms would be the same. This means that, if the current as measured at a node is 0.1 ampere, the current at a loop will be 0.857 ampere.

A line terminated in a resistance equal to its characteristic impedance is equivalent to an infinitely long line; consequently there is no reflection, and no standing waves appear. The standing wave ratio therefore is 1. The input end of such a line appears as a pure resistance of a value equal to the characteristic impedance of the line.

Reactance, resistance, impedance — The input end of a line may show reactance as well as resistance, and the values of these quantities will depend upon the nature of the load at the output end, the electrical length of the line, and the line characteristic impedance. The reactance and resistance are important in determining the method of coupling to the source of power. Assuming that the load at the output end of the line is purely resistive, which is essentially the case since the load circuit is usually tuned to resonance, a line less than a quarter wavelength long electrically will show inductive reactance at its input terminals when the output termination is *less* than the characteristic impedance, and capacitive reactance when the termination is *higher* than the characteristic impedance. If the line is more than a quarter wave but less than a half wave long, the reverse conditions exist. With still longer lengths, the reactance characteristics reverse in each succeeding quarter wavelength. The input impedance is purely resistive if the line is an exact multiple of a quarter wave in length. The reactance at intermediate lengths is higher the greater the standing-wave ratio, being zero for a ratio of 1.

Impedance transformation — Regardless of the standing-wave ratio, the input impedance of a line a half-wave long electrically will be equal to the impedance connected at its output end; the same thing is true of a line any integral multiple of a half-wave in length. Such a line can be considered to be a one-to-one transformer. However, if the line is a quarter-wave (or an odd multiple of a quarter-wave) long, the input impedance will be equal to

$$Z_i = \frac{Z_s^2}{Z_t}$$

where Z_s is the characteristic impedance of the line and Z_t the impedance connected to the output end. A quarter-wave line can, therefore, be used as an *impedance transformer*, and by suitable selection of constants a wide range of input impedance values can be obtained. Furthermore, the impedance measured between the two conductors anywhere along the line will vary between the two end values, so that any intermediate impedance value can be selected. This is a particularly useful property, since a quarter-wave line can be short-circuited at one end (§ 2-12) and used as a *linear transformer* with an adjustable impedance ratio.

Losses — Air-insulated lines operate at quite high efficiency. Parallel-conductor lines average 0.12 to 0.15 db. (§ 3-3) loss per wavelength of line. These figures hold only if the standing-wave ratio is 1. The losses increase with the standing-wave ratio, rather slowly up to a ratio of 15 to 1, but rapidly thereafter. For standing-wave ratios of 10 or 15 to 1, the increase is inconsequential provided the line is well balanced.

Concentric lines with air insulation are excellent when dry, but losses increase if there is moisture in the line. Provision should be therefore made for making such lines air-tight, and they should be thoroughly dry when assembled. This type of line has the least radiation loss. The small lines (⅜-inch outer conductor) should not be used at high voltages; hence, it is desirable to keep the standing-wave ratio down.

Good quality rubber-insulated lines, both twisted pair and coaxial, average about 1 db. loss per wavelength of line. At the higher frequencies, therefore, such lines should be used only in short lengths if losses are important. These lines have the advantages of compactness, ease of installation, and flexibility. Ordinary lamp cord has a loss of approximately 1.4 db. per wavelength when it is dry, but its losses become excessive when wet. The parallel moulded-rubber type is best from the standpoint of withstanding wet weather. The characteristic impedance of lamp cord is between 120 and 140 ohms.

The loss in db. is directly proportional to the length of the line. Thus, a line which has a loss of 1 db. per wavelength will have an actual loss of 3 db. if the line is three wavelengths long. In the case of line losses, the length is not ex-

pressed in terms of electrical length but in physical length; that is, a wavelength of line, in feet, is equal to 984/frequency (Mc.) for computing loss. This permits a direct comparison of lines having the same physical length. The electrical lengths, of course, may differ considerably.

Resonant and non-resonant lines — Lines are classified as *resonant* or *non-resonant*, depending upon the standing-wave ratio. If the ratio is near 1, the line is said to be non-resonant. Reactive effects will be small, and consequently no special tuning provisions need be made for canceling them (§ 2-10) even when the line length is not an exact multiple of a quarter wavelength. If the standing-wave ratio is fairly large, the input reactance must be canceled or "tuned out" unless the line is a multiple of a quarter wavelength, and the line is said to be resonant.

¶ 10-6 Coupling to Transmission Lines

Requirements — The coupling system between a transmitter and the input end of a transmission line must provide means for adjusting the load on the transmitter to the proper value (impedance matching), and for tuning out any reactive component that may be present (2-9, 2-10, 2-11). The resistance and reactance considered are those present *at the input end of the line*, and hence have nothing to do with the antenna itself except insofar as the antenna load may affect the operation of the line (§ 10-5).

Untuned coil — One of the simplest systems, shown in Fig. 1011-A, uses a coil of a few turns tightly coupled to the plate tank coil. Since no provision is made for tuning, this system is suitable only for non-resonant lines which show practically no reactance at the input end. Loading on the transmitter may be varied by varying the coupling between the tank inductance and the *pick-up coil*, as it is frequently called, or by changing the number of turns on the pick-up coil. A slight amount of reactance is coupled into the tank circuit by the pick-up coil, since the flux leakage (§ 2-11) is high, so that some slight retuning of the plate tank condenser may be necessary when the load is connected.

Taps on tank circuit — A method suitable for use with open-wire lines is shown in Fig. 1011-B, where the line is tapped on a balanced tank circuit with taps equidistant from the center or ground point. This symmetry is necessary to maintain line balance to ground (§ 10-5). Loading is increased by moving the taps outward from the center. Any reactance present may be tuned out by readjustment of the plate tank condenser, but this method is not suitable for large values of reactance and therefore direct tapping is best confined to use with non-resonant lines.

Adjustment of untuned systems — Adjustment of either of the above systems is quite simple. Starting with loose coupling, apply power to the transmitter, and adjust the plate tank condenser for minimum plate current. If the current is less than the desired load value, increase the coupling and again resonate the plate condenser. Continue until the desired plate current is obtained, always keeping the plate tank condenser at the setting which gives minimum current.

Pi-section coupling — A coupling system which is electrically equivalent to tapping on the tank circuit, but using a capacity voltage divider in the plate tank circuit for the purpose, is shown in Fig. 1011-C. Since one side of the condenser across which the line is connected is grounded, some unbalance will be introduced into the transmission line. This method is used chiefly with low-power portable sets, because it is readily adjustable to meet a fairly wide range of impedance values. A single-ended amplifier, using either a screen-grid tube or a grid-neutralized triode (§ 4-7), is required, since the plate tank circuit is not balanced. Coupling is adjusted by varying C_1, re-resonating the circuit each time by means of C_2 until the desired amplifier plate current is obtained. In general, the coupling will increase as C_1 is made smaller with respect to C_2. Relatively large-capacity condensers are required to give a suitable impedance-matching range while maintaining resonance.

Pi-section filter — The coupling circuit shown in Fig. 1011-D is a low-pass filter capable of coupling between a fairly wide range of impedances. The method of adjustment is as follows: First, with the filter disconnected from the transmitter tank, tune the transmitter tank to resonance, as evidenced by minimum plate current. Then, with trial settings of the clips on L_1 and L_2 (few turns for high frequencies, more for lower), tap the input clips on the final tank coil at points equidistant from the center, so that about half the coil is included between them. A balanced tank circuit must be used. Set C_2 at about half scale, apply power, and rapidly rotate C_1 until the plate current drops to minimum. If this minimum is not the desired full-load plate current, try a new setting of C_2 and repeat. If, for all settings of C_2, the plate current is too high or too low, try new settings of the taps on L_1 and L_2, and also of the taps on the transmitter tank. Do not touch the tank condenser during these adjustments. When, finally, the desired plate current is obtained, set C_1 carefully to the exact minimum plate-current point. *This adjustment is important in minimizing harmonic output.*

With some lengths of resonant lines, particularly those which are not exact multiples of a quarter wavelength, it may be difficult to get proper loading with the pi-section coupler. Usually antennas of these lengths also will be difficult to feed with other systems of coupling, as well. In such cases, the proper output loading often can be obtained by varying the L/C ratio of the filter over a considerably wider range than is necessary for normal loads.

Series tuning — When the input impedance of the line is low, the coupling method shown in Fig. 1011-E may be used. This system, known as *series tuning*, places the coupling coil, tuning condensers and load all in series, and is particularly suitable for use with resonant lines when a current loop appears at the input end. As shown, two tuning condensers are used, to keep the line balanced to ground. However, one will suffice, the other end of the line being connected directly to the end of L_1.

The tuning procedure with series tuning is as follows: With C_1 and C_2 at minimum capacity, couple the antenna coil, L_1, loosely to the transmitter output tank coil, and observe the plate current. Then increase C_1 and C_2 simultaneously until a setting is reached which gives maximum plate current, indicating that the antenna system is in resonance with the transmitting frequency. Readjust the plate tank condenser to minimum plate current. This is necessary because tuning the antenna circuit will have some effect on the tuning of the plate tank. The new minimum plate current will be higher than with the antenna system detuned, but should still be well below the rated value for the tube or tubes. Increase the coupling between L_1 and L_2 by a small amount, readjust C_1 and C_2 for maximum plate current, and again set the plate tank condenser to minimum. Continue this process until the minimum plate current is equal to the rated plate current for the amplifier. Always use the degree of coupling between L_1 and L_2 which will just bring the amplifier plate current to rated value when C_1 and C_2 pass through resonance. The r.f. ammeters should indicate maximum feeder current at the resonance setting; these meters are not strictly necessary, but are useful in indicating the relative power output.

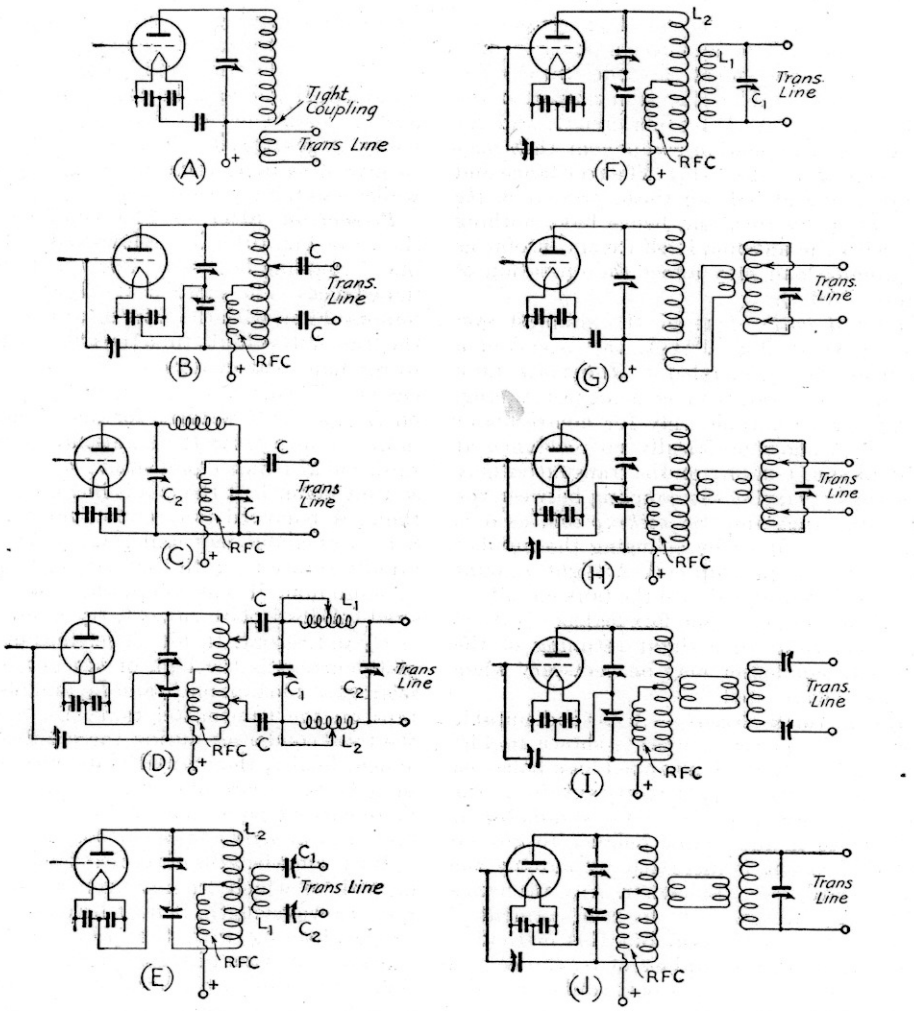

Fig. 1011— Methods of coupling the transmitter output to the transmission line. Application, circuit values and adjustment are discussed in the text. The coupling condensers, C, are fixed blocking condensers used to isolate the transmitter plate voltage from the antenna. Their capacity is not critical, 500 $\mu\mu$fd. to 0.002 μfd. being satisfactory values, but their voltage rating should at least equal the plate voltage on the final stage.

Parallel tuning — When the line has high input impedance, the use of parallel tuning, as shown in Fig. 1011-F, is required. Here the coupling coil, tuning condenser and line all are in parallel, the load represented by the line being directly across the tuned coupling circuit. If the line is non-reactive, the coupling circuit will be tuned independently to the transmitter frequency; line reactance can be compensated for by tuning of C_1 and, if necessary, adjustment of L_1 by means of taps. Parallel tuning is suited to resonant lines when a voltage loop appears at the input end.

The tuning procedure is quite similar to that with series tuning. Find the value of coupling between L_1 and L_2 which will bring the plate current to the desired value as C_1 is tuned through resonance. Again, a slight readjustment of the amplifier tank condenser may be necessary to compensate for the effect of coupled reactance.

Link coupling — Where tuning of the circuit connected to the line is necessary or desirable, it is possible to separate physically the line-tuning apparatus and the plate tank circuit by means of link coupling (§ 2-11). This is often convenient from a constructional standpoint, and has the advantage that, with proper construction, there will be somewhat less harmonic transfer to the antenna, since stray capacity coupling is lessened with the smaller link coils.

Figs. 1011-G and H show a method which can be considered to be a variation of Fig. 1011-B. The first (G) is suitable for use with a single-ended plate tank, the second (H) for a balanced tank. The auxiliary tank on which the transmission line is tapped may have adjustable inductance as well as capacity, to provide a wide range of reactance variation for compensating for line reactance. The center of the auxiliary tank inductance may be grounded, if desired. The link windings should be placed at the grounded parts of the coils, to reduce capacity coupling and consequent harmonic transfer. With this inductively coupled system, the loading on the auxiliary tank circuit increases as the taps are moved outward from the center, but, since this decreases the Q of the circuit, the coupling to the plate tank simultaneously decreases (§ 2-11). Hence, a compromise adjustment giving proper loading must be found in practice. Loading also may be varied by changing the coupling between one link winding and its associated tank coil; either tank may be used for this purpose. When the auxiliary tank is properly tuned to compensate for line reactance, the plate tank tuning will be practically the same as with no load; hence, the plate tank condenser need be readjusted only slightly to compensate for the small reactance introduced by the link.

Link coupling also may be used with series and parallel tuning, as shown in Figs. 1011-I and J. The coupling between one link and its associated coil may be made variable, to give the same effect as changing the coupling between the plate tank and antenna coils in the ordinary system. The tuning procedure is the same as described above for series and parallel tuning. In the case of single-ended tank circuits the input link is coupled to the grounded end of the tank coil, as in Fig. 1011-G.

Circuit values — The values of inductance and capacity to use in the antenna coupling system will depend upon the transmitting frequency, but are not particularly critical. With series tuning (Fig. 1011-E, I), the coil may consist of a few turns of the same construction as is used in the final tank; average values will run from one or two turns at very-high frequencies to perhaps 10 or 12 at 1.75 Mc. The number of turns preferably should be adjustable so that the inductance can be changed should it not be possible to reach resonance with the condensers used. The series condensers should have a maximum capacity of 250 or 350 $\mu\mu$fd. at the lower frequencies; the same values will serve even at 28 Mc., although 100 $\mu\mu$fd. will be ample for this and the 14-Mc. band. Still smaller condensers can be used at very-high frequencies. Since series tuning is used at a low-voltage point in the feeder system, the plate spacing of the condensers does not have to be large. Ordinary receiving-type condensers are large enough for plate voltages up to 1000, and the smaller transmitting condensers have high-enough voltage ratings for higher-power applications. In high-power radiotelephone transmitters it may be necessary to use condensers having a plate spacing of approximately 0.15 to 0.2 inch.

In parallel-tuned circuits (F, G, H, J) the antenna coil and condenser should be approximately the same as those used in the final tank circuit. The antenna tank circuit must be capable of being tuned independently to the transmitting frequency, and, if possible, provision should be made for tapping the coil, so that the L/C ratio can be varied to the optimum value (§ 2-11) as determined experimentally.

In Fig. 1011-D, C_1 and C_2 may be 100 to 250 $\mu\mu$fd. each, the higher-capacity values being used for lower-frequency operation (3.5 and 1.75 Mc.). Plate spacing should be, in general, at least half that of the final-amplifier tank condenser. For operation from 1.75 to 14 Mc., L_1 and L_2 each may consist of 15 turns, 2½ inches in diameter, spaced to occupy 3 inches length, and tapped every three turns. Approximate settings are 15 turns for 1.75 Mc., 9 turns for 3.5 Mc., 6 turns for 7 Mc., and 3 turns for 14 Mc. The coils may be wound with No. 14 or No. 12 wire. This method of coupling is very seldom used at very-high frequencies.

Harmonic reduction — It is important to prevent, insofar as possible, harmonics in the output of the transmitter from being transferred to the antenna system. Untuned (Fig. 1011-A) and directly coupled (Figs. 1011-B) systems do not discriminate against harmonics, and hence are more likely to cause harmonic

radiation than the inductively coupled tuned systems. Low-pass filter arrangements, such as those at C and D, Fig. 1011, do discriminate against harmonics, but the direct coupling frequently is a source of trouble in this respect.

In inductively coupled systems, care must be taken to prevent capacity coupling between coils. Link coils always should be coupled at a point of ground potential (§ 2-13) on the plate tank coil, as also should series- and parallel-tuned coils (E and F), when possible. Capacity coupling can be practically eliminated by the use of a Faraday shield (§ 4-9) between the plate tank and antenna coils.

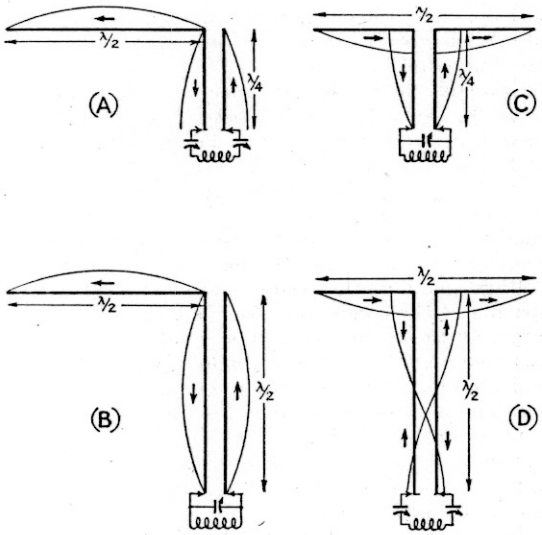

Fig. 1012 — Half-wave antennas fed from resonant lines. A and B are end-feed systems for use with quarter- and half-wave lines; C and D are center-feed systems. The current distribution is shown for all four cases, arrows indicating the instantaneous direction of current flow.

10-7 Resonant Lines

Two-wire lines — Because of its simplicity of adjustment and flexibility with respect to the frequency range over which an antenna system will operate, the resonant line is widely used with simple antenna systems. Constructionally, the spaced or "open" two-wire line is best suited to resonant operation; rubber-insulated lines, such as twisted pair, have excessive losses when operated with standing waves.

Connection to antenna — A resonant line is usually — in fact, practically always — connected to the antenna at either a current or voltage loop. This is advantageous, especially when the antenna is to be operated at harmonic frequencies, since it simplifies the problem of determining the coupling system to be used at the input end of the line.

Half-wave antenna with resonant line — It is often helpful to look upon the resonant line simply as an antenna folded back on itself. Such a line may be any whole-number multiple of a quarter wave in length; in other words, any total wire length which will accommodate a whole number of standing waves. (The "length" of a two-wire line is, however, always taken as the length of one of the wires.)

Quarter- and half-wave resonant lines feeding half-wave antennas are shown in Fig. 1012. The current distribution on both antenna and line is indicated. It will be noted that the quarter-wave line has maximum current at one end and minimum current at the other, determined by the point of connection to the antenna. The half-wave line, however, has the same current (and voltage) values at both ends.

If a quarter-wave line is connected to the end of an antenna, as shown in Fig. 1012-A, then at the transmitter end of the line the current is high and the voltage low (low impedance), so that series tuning (§ 10–6) can be used. Should the line be a half-wave long, as at 1012-B, current will be minimum and voltage maximum (high impedance) at the transmitter end of the line, just as it is at the end of the antenna. Parallel tuning therefore is required (§ 10-6). The line could be coupled to a balanced final tank through small condensers, as in Fig. 1011-B, but the inductively coupled circuit is preferable. An end-fed antenna with resonant feeders, as in 1011-A and B, is known as the "Zeppelin" or "Zepp" antenna.

The line also may be inserted at the center of the antenna at the maximum-current point. Quarter- and half-wave lines used in this way are shown at Fig. 1012-C and D. In C, the antenna end of the line is at a high-current low-voltage point (§ 10-2); hence, at the transmitter end the current is low and the voltage high. Parallel tuning therefore is used. The half-wave line at D has high current and low voltage at both ends, so that series tuning is used at the transmitter end.

The four arrangements shown in Fig. 1012 are thoroughly useful antenna systems, and are shown in more practical form in Fig. 1013. In each case the antenna is a half wavelength long, the exact length being calculated from Equations 2, 3 or 4 (§ 10-2) or taken from the charts of Fig. 1016. The line length should be an integral multiple of a quarter wavelength and may be calculated from equation 5 (§ 10-5), the result being multiplied by any whole number which gives a total length convenient for reaching from the antenna to the transmitter. If there is an *odd* number of quarter waves on the line in the case of the end-fed antenna, series tuning should be used at the transmitter end; if an *even* number of quarter waves, then parallel tuning should be used. With the center-fed antenna the reverse is true.

Practical line lengths — In general, it is best to use line lengths that are integral multiples of a quarter wavelength. Intermediate lengths will give intermediate impedance values and will show reactance (§ 10-5) as well. The tuning apparatus is capable of compensating for reactance, but it may be difficult to get

suitable transmitter loading because simple series and parallel tuning are suitable for only low and high impedances, respectively, and neither will perform well with impedances of the order of a few hundred ohms. Such values of impedance may reduce the Q of the coupling circuit to a point where adequate coupling cannot be obtained (§ 2-11). However, some departure from the ideal length is possible — even as much as 25 per cent of a quarter wave in many cases — without undue difficulty in tuning and coupling. In such cases the type of tuning to use, whether series or parallel, will depend on whether the feeder length is nearer an odd number of quarter waves or nearer an even number, as well as on the point at which the feeder is connected to the antenna.

Line current — The feeder current as read by the r.f. ammeters is useful for tuning purposes only; the absolute value is of little importance. When series tuning is used the current will be high, but very little current will be indicated in a parallel-tuned system. This is because of the current distribution on the feeders, as shown by Fig. 1012. With a given antenna and tuning system, of course, the greatest power will be delivered to the antenna when the readings are highest. However, should the feeder length be changed no useful conclusions can be drawn from comparison between the new and old readings. For this reason, any indicator which registers the relative intensity of r.f. current can be used for tuning purposes. Many amateurs, in fact, use flashlight or dial lamps for this purpose, instead of meters. They are inexpensive, and, when shunted by short lengths of wire so that considerable current can be passed without burn-out, will serve very well even with high-power transmitters.

Antenna length and line operation — Insofar as the operation of the antenna itself is concerned, departures of a few per cent from the exact length for resonance are of negligible consequence. Such inaccuracies may influence the behavior of the feeder system, however, and as a result may have an adverse effect on the operation of the system as a whole. This is true particularly of end-fed antennas, such as are shown in Fig. 1013-A and -B.

For example, Fig. 1014-A shows the current distribution on the half-wave antenna and quarter-wave feeder when the antenna length is correct. At the junction of the "live" feeder and the antenna the current is minimum, so that the currents in the two feeder wires are equal at all corresponding points along their length. When the antenna is too long, as in B, the current minimum occurs at a point on the antenna proper, so that at the top of the live feeder there is already appreciable current flowing, whereas at the top of the "dead" feeder the current must be zero. As a result the feeder currents are not balanced, and some power will be radiated from the line. In C, the antenna is too short, bringing the current

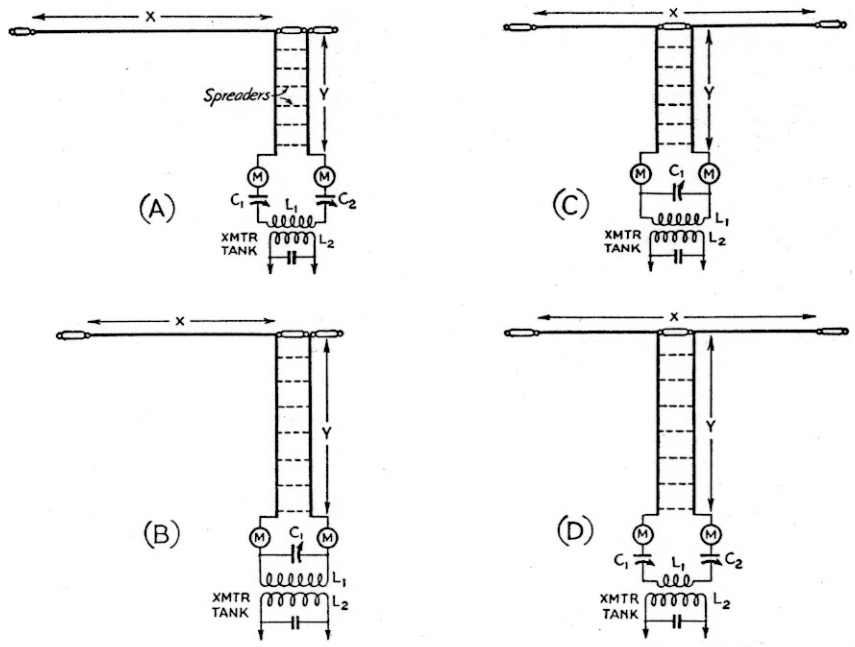

Fig. 1013 — Practical half-wave antenna systems using resonant-line feed. In the center-feed systems, the antenna length, X, does not include the length of the insulator at the center. Line length is measured from the antenna to the tuning apparatus; leads in the latter should be kept short enough so their effect can be neglected. The use of two r.f. ammeters, M, as shown is helpful for balancing feeder currents; however, one meter is sufficient to enable tuning for maximum output, and may be transferred from one feeder to the other, if desired. The systems at (A) and (C) are for feeders an odd number of quarter waves in length; (B) and (D) are for feeders a multiple of a half wavelength. The drawings correspond electrically to the half-wave antenna systems shown in Fig. 1012.

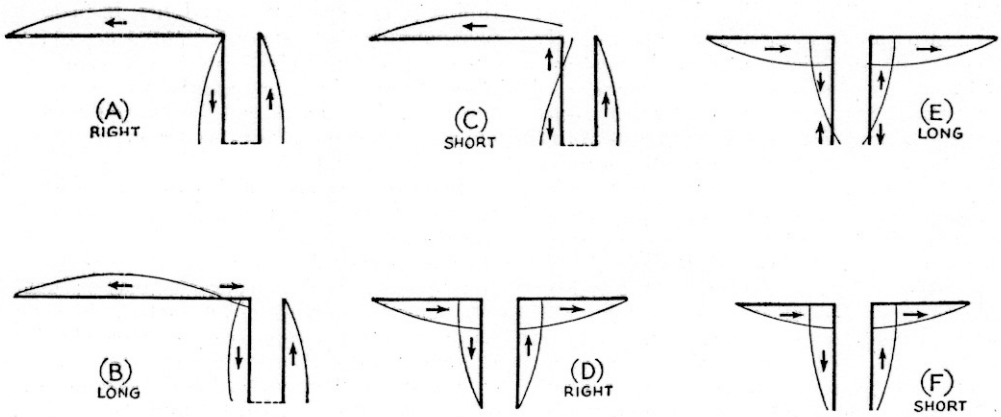

Fig. 1014 — Illustrating the effect on feeder balance of incorrect antenna length for various types of antenna systems. In end-feed systems, the current minimum shifts above or below the feeder junction, unbalancing the line. With center feed out, incorrect antenna length does not unbalance the transmission line, as it does with end feed.

minimum to a point on the live feeder, so that again the currents are unbalanced. The more serious the unbalance, the greater the radiation from the line.

Strictly speaking, a line having an unbalanced connection, such as the one-way termination at the end of an antenna, cannot be truly balanced even though the antenna length is correct. This is because of the difference in loading on the two sides. The effect of this difference is fairly small when the currents are balanced, however.

If the antenna is fed at the center the undesirable effects of incorrect antenna length balance out, so that the line operates properly under all conditions. This is shown in Fig. 1014 at D, E and F. So long as the two halves of the antenna are of equal length the distribution of current on the feeders will be symmetrical, so that no unbalance exists even for antenna lengths considerably removed from the correct value.

¶ 10-8 Non-Resonant Lines

Requirements — The advantages of non-resonant transmission lines — minimum losses, and elimination of the necessity for tuning — make this type of operation attractive. The chief disadvantage of the non-resonant line, aside from the necessity for more care in initial adjustment, is that when "matched" to the ordinary antenna the match is perfect only for one frequency, or at most for a small band of frequencies on either side of the frequency for which the matching is done. Except for a few special systems, this means that the antenna is unsuitable for work on more than one amateur band.

Adjustment of a non-resonant line is simply a process of adjusting the terminating resistance to match the characteristic impedance of the line. To accomplish this the antenna itself must be resonant at the selected frequency, and the line must then be connected to it in such a way that the antenna impedance as looked at by the line is the right value. The matching may be done by connecting the line at the proper spot along the antenna, by inserting an impedance-transforming device between the antenna and line, or by using a line having an impedance equal to the center impedance of the antenna.

In the following discussion of ways in which different types of lines may be matched to the antenna, a half-wave antenna is used as an example. Other types of antennas may be treated by the same methods, making due allowance for the order of impedance that appears at the end of the line when more elaborate systems are used.

Single-wire feed — In the single-wire-feed system, the return circuit is through the ground. There will be no standing waves on the feeder when its characteristic impedance is matched by the impedance of the antenna at the connection point. The principal dimensions (Fig. 1015) are the length of the antenna, *L*, and the distance, *D*, from the exact center of the antenna to the point at which the feeder is attached. Approximate dimensions can be obtained from Fig. 1016 for an antenna system having a fundamental frequency in any of the most-used amateur bands.

In constructing an antenna system of this type, the feeder must run straight away from the antenna (at a right angle) for a distance of at least one-third the length of the antenna. Otherwise the field of the antenna will affect the feeder and cause faulty operation. There

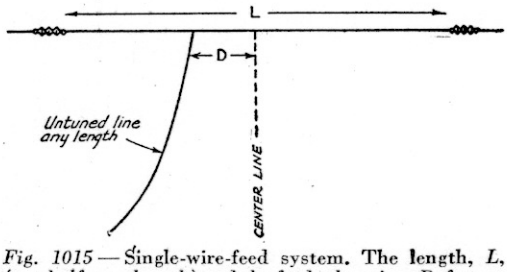

Fig. 1015 — Single-wire-feed system. The length, *L*, (one-half wavelength) and the feeder location, *D*, for various bands are determined from the charts of Fig. 1016.

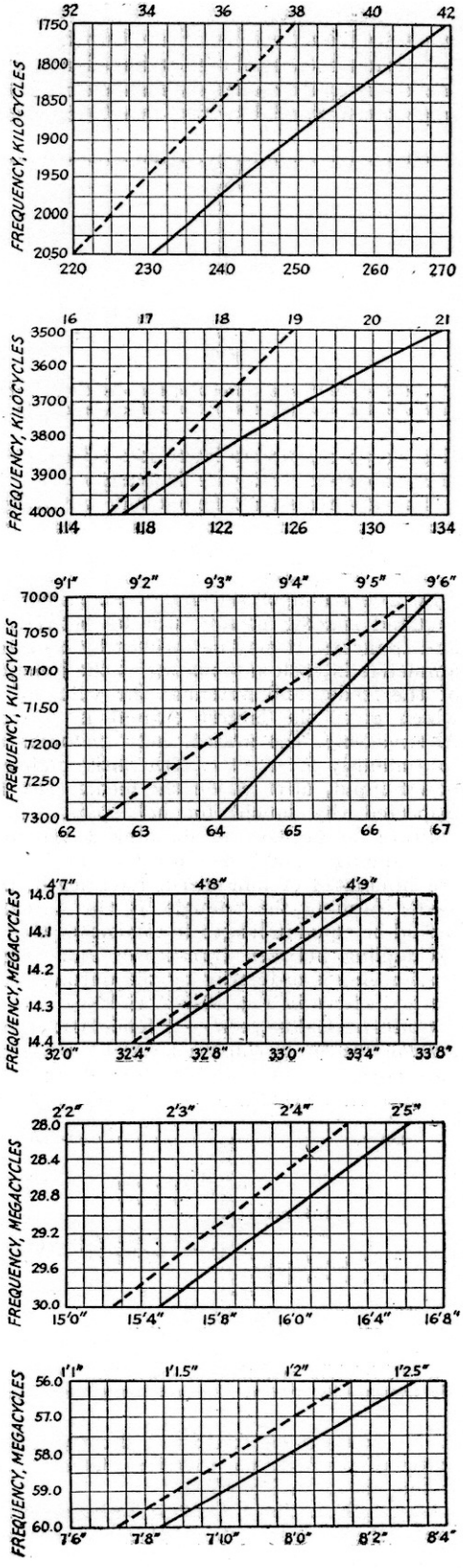

Fig. 1016 — Charts for determining the length of half-wave antennas for use on various amateur frequencies. Solid lines indicate antenna length in feet (lower scale); dotted lines indicate the point of connection for a single-wire feeder (upper scale) measured from center of antenna.

should be no sharp bends in the feeder wire at any point.

With the coupling system shown in Fig. 1017-A, the process of adjustment is as follows: Starting at the ground end of the tank coil, the tap is moved towards the plate end until the amplifier draws the rated plate current. The plate tank condenser should be readjusted each time the tap is changed, to bring the plate current back to minimum. The amplifier is loaded properly when this "minimum" value is the rated current. The condenser, *C*, in the feeder is for the purpose of insulating the antenna system from the high-voltage plate supply when series plate feed is used. It should have a voltage rating somewhat higher than that of the plate supply. Almost any capacity greater than 500 $\mu\mu$fd. will be satisfactory. The condenser is unnecessary, of course, if parallel plate feed is used.

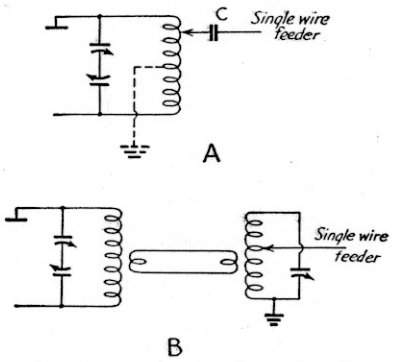

Fig. 1017 — Methods of coupling the feeder to the transmitter in a single-wire-feed system. Circuits are shown for both single-ended and balanced tank circuits.

Inductive coupling to the output circuit is shown in Fig. 1017-B. The antenna tank circuit should tune to resonance at the operating frequency, and the loading is adjusted by varying the coupling between the two tanks, both being kept tuned to resonance.

Regardless of the type of coupling, a good ground connection is essential with this system. Single-wire feed works best over moist ground, and poorly over rock and sand.

Twisted-pair feed — A two-wire line composed of twisted rubber-covered wires can be constructed to have a surge impedance approximately equal to the 70-ohm impedance at the center of the antenna itself, thus permitting connecting the line to the antenna as shown in Fig. 1018. Any discrepancy which may exist between line and antenna impedance can be compensated for by a slight fanning of the line where it connects to the two halves of the antenna, as shown at *B* in Fig. 1018.

The twisted-pair line is a convenient type to use, since it is easy to install and the r.f. voltage on it is low because of the low impedance. This makes the quality of insulation a matter of less importance. Special twisted line for transmitting purposes, having lower losses than ordinary rubber-covered wire, is available.

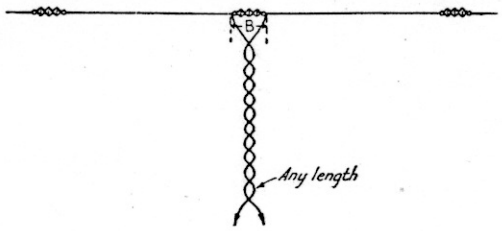

Fig. 1018 — Half-wave antenna center-fed by a twisted-pair line. Fanning (*B*) compensates for line impedance.

The antenna should be one-half wavelength long for the frequency of operation, as determined by charts of Fig. 1016 or the formulas (§ 10-2). The amount of "fanning" (dimension *B*) will depend upon the kind of cable used; the required spacing usually will be between 6 and 18 inches. It may be checked by inserting ammeters in each antenna leg at the junction of the feeder and antenna; the value of *B* which gives the largest current is correct. Alternatively, the system may be operated continuously for a time with fairly high r.f. power input, after which the feeder may be inspected (by touch) for hot spots. These indicate the presence of standing waves, and the fanning should be adjusted until they are eliminated or minimized. Each leg of the feeder forming the triangle at the antenna should be equal in length to dimension *B*.

Coupling between transmitter and transmission line is ordinarily by the untuned coil method shown in Fig. 1011-A (§ 10-6).

Concentric-line feed — A concentric transmission line can be constructed to have a surge impedance exactly equal to the 70-ohm impedance at the center of a half-wave antenna.

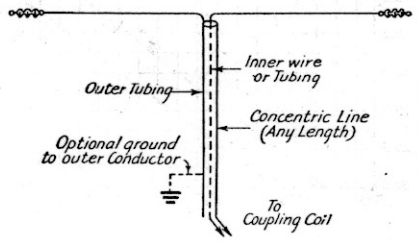

Fig. 1019 — Half-wave antenna center-fed by a concentric transmission line of 70 ohms surge impedance.

Such a line can be connected directly to the center of the antenna, therefore, forming the system shown in Fig. 1019.

Solving Equation 6 (§ 10-5) for an air-insulated concentric line shows that, to obtain a 70-ohm surge impedance, the inside diameter of the outer conductor should be approximately 3.2 times the outside diameter of the inner conductor. This condition can be fulfilled by using standard 5/16-inch (outside diameter) copper tubing for the outer conductor and No. 14 wire for the inner. Ceramic insulating spacers are available commercially for this combination. Rubber-insulated concentric line having the requisite impedance for connection to the center of the antenna also is available.

The operation of such an antenna system is similar to that of the twisted-pair system just described, and the same transmitter coupling arrangements may be used (§ 10-6).

The outer conductor of the line may be grounded, if desired. The feeder system is slightly unbalanced, because the inner and outer conductors do not have the same capacity to ground. There should be no radiation from a line having a correct surge impedance, however.

Delta matching transformer — Because of the extremely close spacing required, it is impracticable to construct an open-wire transmission line which will have a surge impedance low enough to work directly into the center of a half-wave antenna. Such wire lines usually have impedances between 400 and 700 ohms, 600 ohms being a widely used value. It is necessary, therefore, to use other means for matching the line to the antenna.

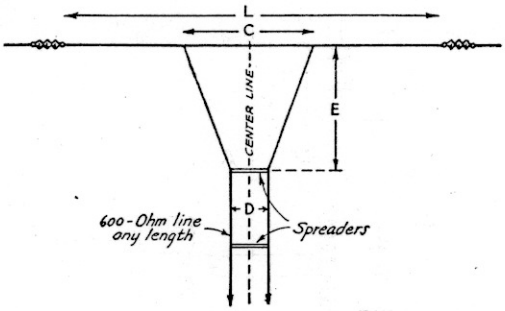

Fig. 1020 — Delta-matched antenna system. The dimensions *C*, *D*, and *E* are found by formulas given in the text. It is important that the matching section, *E*, come straight away from the antenna without any bends.

One method of matching is illustrated by the system shown in Fig. 1020. The matching section, *E*, is "fanned" to have a gradually increasing impedance so that its impedance at the antenna end will be equal to the impedance of the antenna section, *C*, while the impedance at the lower end matches that of a practicable transmission line.

The antenna length, *L*, the feeder clearance, *E*, the spacing between centers of the feeder wires, *D*, and the coupling length, *C*, are the important dimensions of this system. The system must be designed for exact impedance values as well as frequency values, and the dimensions therefore are fairly critical.

The length of the antenna is figured from the formula (§ 10-2) or taken from Fig. 1016.

The length of section C is computed by the formula:

$$C\ (feet) = \frac{148}{Freq.\ (Mc.)}$$

The feeder clearance, E, is found from the equation:

$$E\ (feet) = \frac{123}{Freq.\ (Mc.)}$$

The above equations are for feeders having a characteristic impedance of 600 ohms and will not apply to feeders of any other impedance. The proper feeder spacing for a 600-ohm transmission line is computed to a sufficiently close approximation by the following formula:

$$D = 75 \times d$$

where D is the distance between the centers of the feeder wires and d is the diameter of the wire. If the wire diameter is in inches the spacing also will be in inches, and if the wire diameter is in millimeters the spacing also will be in millimeters.

Methods of coupling to the transmitter are discussed in § 10-6, those shown in Figs. 1011-C, D, G and H being suitable.

"Q"-section transformer — The impedance of a two-wire line of ordinary construction (400 to 600 ohms) can be matched to the impedance of the center of a half-wave antenna by utilizing the impedance-transforming properties of a quarter-wave line (§ 10-5). The matching section must have low surge impedance and therefore is commonly constructed of large-diameter conductors such as aluminum or copper tubing, with fairly close spacing. This system is known as the "Q" antenna. It is shown in Fig. 1021. The important dimensions are the length of the antenna, the length of the matching section, B, the spacing between the two conductors of the matching section, C, and the impedance of the untuned transmission line connected to the lower end of the matching section.

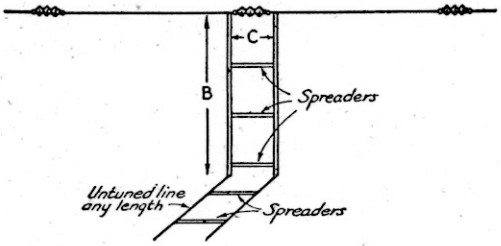

Fig. 1021 — The "Q" antenna, using a quarter-wave impedance-matching section with close-spaced conductors.

The required surge impedance for the matching section is

$$Z_s = \sqrt{Z_1 Z_2} \qquad (9)$$

where Z_1 is the input impedance and Z_2 the output impedance. Thus a quarter-wave section matching a 600-ohm line to the center of a half-wave antenna (72 ohms) should have a surge impedance of 208 ohms. The spacings between conductors of various sizes of tubing and wire for different surge impedances are given in graphical form in Fig. 1009. With ½-inch tubing, the spacing should be 1.5 inches for an impedance of 208 ohms.

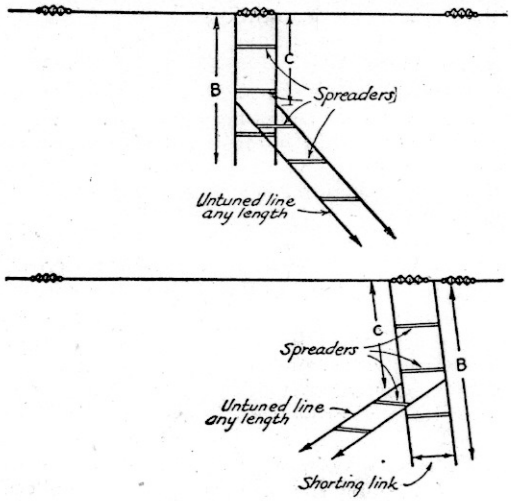

Fig. 1022 — Half-wave antenna systems with quarter-wave open-wire linear impedance-matching transformers.

The length of the matching section, B, should be equal to a quarter wavelength, and is given by

$$Length\ of\ quarter\text{-}wave\ line\ (feet) = \frac{234}{Freq.\ (Mc.)}$$

The length of the antenna can be calculated from the formula (§ 10-2), or taken from the charts of Fig. 1015.

This system has the advantage of the simplicity of adjustment of the twisted-pair feeder system and at the same time the superior insulation of an open-wire system. Figs. 1011-B, D, G and H (§ 10-6) represent suitable methods of coupling to the transmitter.

Linear transformers — Fig. 1022 shows two methods of coupling a non-resonant line to a half-wave antenna through a quarter-wave linear transformer (§ 10-5) or matching section. In the case of the center-fed antenna, the free end of the matching section, B, is open (high impedance), since the other end is connected to a low-impedance point on the antenna. With the end-fed antenna, the free end of the matching section is closed through a shorting bar or link; this end of the section has low impedance, since the other end is connected to a high-impedance point on the antenna (§ 10-7).

In the center-fed system, the antenna and matching section should be cut to lengths found from the equations in § 10-2 and § 10-5. Any necessary on-the-ground adjustment can be made by adding to or clipping off the open ends of the matching section. The matching

section in the end-fed system can be adjusted by making the line a little longer than necessary and adjusting the system to resonance by moving the shorting link up and down. Resonance can be obtained by exciting the antenna at the proper frequency from a temporary antenna near by and measuring the current in the shorting bar by a low-range r.f. ammeter or galvanometer. The position of the bar should be adjusted for maximum current reading. This should be done before the transmission line is attached to the matching section.

The position of the line taps must be determined experimentally, since it will depend upon the impedance of the line as well as on the antenna impedance at the point of connection. The procedure is to take a trial point, apply power to the transmitter, and check the transmission line for standing waves. This can be done by measuring the current in the wires, using a device of the type pictured in Fig. 1023. The hooks (which should be sharp enough to cut through the insulation, if any, on the wires) are placed on one of the wires, the spacing between them being adjusted to give a suitable reading on the meter. At any one position along the line the currents in the two wires should be identical. Readings taken at intervals of a quarter wavelength will indicate whether or not standing waves are present.

It will not usually be possible to obtain complete elimination of standing waves when the matching stub is exactly resonant. The line taps should be adjusted for the smallest obtainable standing-wave ratio. Then a further "touching up" of the matching-stub tuning will eliminate the remaining standing wave, provided the adjustments are carefully made. The stub must be readjusted, because when resonant it exhibits some reactance as well as resistance at all points except at the ends, and the slight lengthening or shortening of the stub is necessary to tune out this reactance. The required readjustment will be quite small, however.

When the connection between the matching section and the antenna is unbalanced, as in the end-fed system, it is important that the antenna be the right length for the operating frequency if a good match is to be obtained

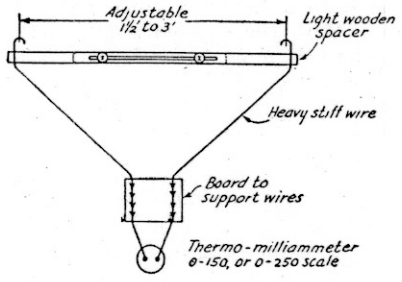

Fig. 1023 — Line-current measuring device for checking standing waves in adjusting untuned transmission lines.

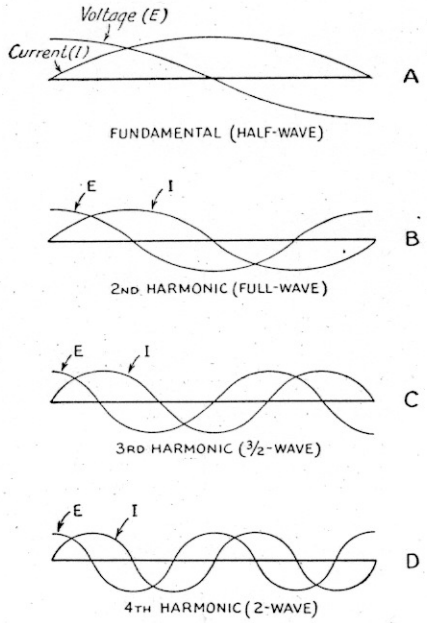

Fig. 1024 — Standing-wave current and voltage distribution along an antenna when it is operated at various harmonics of its fundamental resonant frequency.

(§ 10-7). The balanced center-fed system is less critical in this respect. The shorting-bar method of tuning the center-fed system to resonance may be used if the matching section is extended to a half wavelength, bringing a current loop at the free end.

An impedance mismatch of several per cent is of little consequence so far as power transfer to the antenna is concerned. It is relatively easy to get the standing-wave ratio down to 2 or 3 to 1, a perfectly satisfactory condition in practice. Of considerably greater importance is the necessity for getting the currents in the two wires balanced, both as to amplitude and phase. If the currents are not the same at corresponding points on adjacent wires and the loops and nodes do not also occur at corresponding points, there will be considerable radiation loss. Perfect balance can be brought about only by perfect symmetry in the line, particularly with respect to ground. This symmetry should extend to the coupling apparatus at the transmitter. An electrostatic shield between the line and the transmitter coupling coils often will be of value in preventing capacity unbalance, and at the same time will reduce harmonic radiation.

10-9 Long-Wire Antennas

Definition — An antenna will be resonant so long as an integral number of standing waves of current and voltage can exist along its length; in other words, so long as its length is some integral multiple of a half wavelength. When the antenna is more than a half-wave long it usually is called a long-wire antenna, or a harmonic antenna.

Current and voltage distribution — Fig. 1024 shows the current and voltage distribution along a wire operating at its fundamental frequency (where its length is equal to a half wavelength) and at its second, third and fourth harmonics. For example, if the fundamental frequency of the antenna is 7 Mc., the current and voltage distribution will be as shown at A. The same antenna excited at 14 Mc. would have current and voltage distribution as shown at B. At 21 Mc., the third harmonic of 7 Mc., the current and voltage distribution would be as in C; and at 28 Mc., the fourth harmonic, as in D. The number of the harmonic is the number of half waves contained in the antenna at the particular operating frequency.

The polarity of current or voltage in each standing wave is opposite to that in the adjacent standing waves. This is shown in the figure by drawing the current and voltage curves successively above and below the antenna (taken as a zero reference line), to indicate that the polarity reverses when the current or voltage goes through zero. Currents flowing in the same direction are *in phase;* in opposite directions, *out of phase.*

It is evident that one antenna may be used for harmonically related frequencies, such as the various amateur bands. The long-wire or harmonic antenna is the basis of multi-band operation with one antenna.

Physical lengths — The length of a long-wire antenna is not an exact multiple of that of a half-wave antenna because the end effects (§ 10-2) operate only on the end sections of the antenna; in other parts of the wire these effects are absent, and the wire length is approximately that of an equivalent portion of the wave in space. The formula for the length of a long-wire antenna, therefore, is

$$Length\ (feet) = \frac{492\ (N\text{-}0.05)}{Freq.\ (Mc.)} \qquad (10)$$

where N is the number of *half* waves on the antenna. From this, it is apparent that an antenna cut as a half wave for a given frequency will be slightly off resonance at exactly twice that frequency (on the second harmonic) because of the different behavior of end effects when there is more than one standing wave on the antenna. For instance, if the antenna is cut to exact fundamental resonance on the second harmonic (full wave) it should be 2.6 per cent longer, and on the fourth harmonic (two wave), 4 per cent longer. The effect is not very important except for a possible unbalance in the feeder system (§ 10-7), which may result in some radiation from the feeder in end-fed systems.

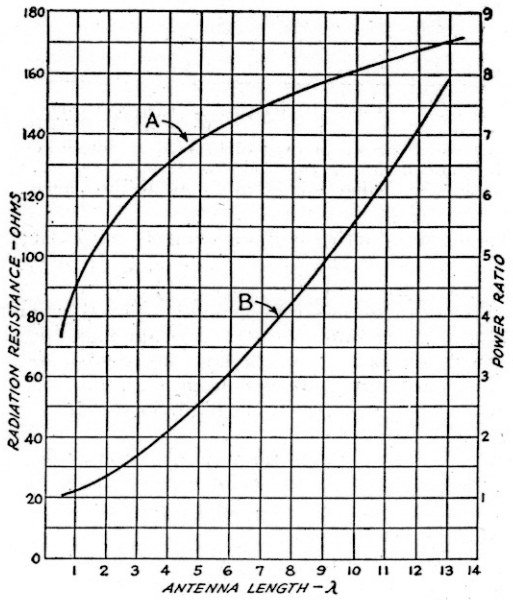

Fig. 1025 — Curve A shows variation in radiation resistance with antenna length. Curve B shows power in lobes of maximum radiation for long-wire antennas as a ratio to the maximum radiation for a half-wave antenna.

Impedance and power gain — The radiation resistance as measured at a current loop becomes larger as the antenna length is increased. Also, a long-wire antenna radiates more power in its most favorable direction than does a half-wave antenna in its most favorable direction. This power gain is secured at the expense of radiation in other directions. Fig. 1025 shows how the radiation resistance and the power in the lobe of maximum radiation vary with the antenna length.

Directional characteristics — As the wire is made longer in terms of the number of half wavelengths, the directional effects change. Instead of the "doughnut" pattern of the half-wave antenna, the directional characteristic splits up into "lobes" which make various angles with the wire. In general, as the length of the wire is increased the direction in which maximum radiation occurs tends to approach the line of the antenna itself.

Directional characteristics for antennas one wavelength, three half-wavelengths, and two wavelengths long are given in Figs. 1026, 1027 and 1028, for three vertical angles of radiation. Note that, as the wire length increases, the radiation along the line of the antenna becomes more pronounced. Still longer antennas can be considered to be practically "end-on" radiators, even at the lower radiation angles.

Methods of feeding — In a long-wire antenna, the currents in adjacent half-wave sections must be out of phase, as shown in Fig. 1029 and Fig. 1024. The feeder system must not upset this phase relationship. This requirement is met by feeding the antenna at either end or at any current *loop.* A two-wire feeder cannot be inserted at a current *node,* however, because this invariably brings the currents in two adjacent half-wave sections in phase; if the phase in one section could be reversed, then the currents in the feeders necessarily would have to be in phase and the feeder radiation would not be canceled out.

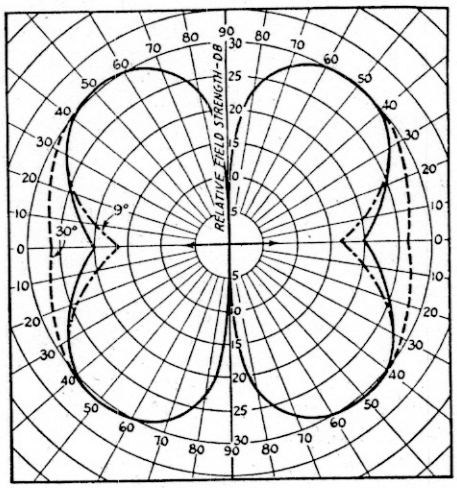

Fig. 1026 — Horizontal patterns of radiation from a full-wave antenna. The solid line shows the pattern for a vertical angle of 15 degrees; dotted lines show deviation from the 15-degree pattern at 9 and 30 degrees. All three patterns are drawn to the same relative scale; actual amplitudes will depend upon the height of the antenna.

Either resonant or non-resonant feeders may be used. With the latter, the systems employing a matching section (§ 10-8) are best. The non-resonant line may be tapped on the matching section, as in Fig. 1022, or a "Q" type section, Fig. 1021, may be employed. In such case, Fig. 1030 gives the required surge impedance for the matching section. It can also be calculated from Equation 9 (§ 10-8) and the radiation resistance data in Fig. 1025.

Methods of coupling the line to the transmitter are the same as described in § 10-6 for the particular type of line used.

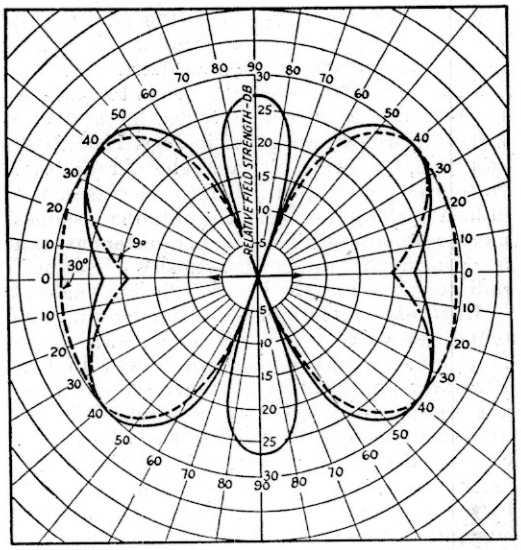

Fig. 1027 — Horizontal patterns of radiation from an antenna three half-waves long. The solid line shows the pattern for a vertical angle of 15 degrees; dotted lines show deviation from the 15-degree pattern at 9 and 30 degrees. Minor lobes coincide for all three angles.

◖ 10-10 Multi-Band Antennas

Principles — As suggested in the preceding section, the same antenna may be used for several bands by operating it on harmonics. When this is done it is necessary to use resonant feeders, since the impedance matching for non-resonant feeder operation can be accomplished only at one frequency unless means are provided for changing the length of a matching section and shifting the point at which the feeder is attached to it. A matching section which is a quarter wavelength long at one frequency will be a half wavelength long at twice that frequency, and so on; and changing the length of the wires, even by switching, is so inconvenient as to be impracticable.

Also, the current loops shift to a new position on the antenna when it is operated on harmonics, further complicating the feed situation. It is for this reason that half-wave antennas center-fed by rubber-insulated lines are practically useless for harmonic operation; on all even harmonics there is a voltage maximum at the feed point, and the impedance mismatch is so bad that there is a large standing-wave ratio and consequently high losses in the rubber dielectric.

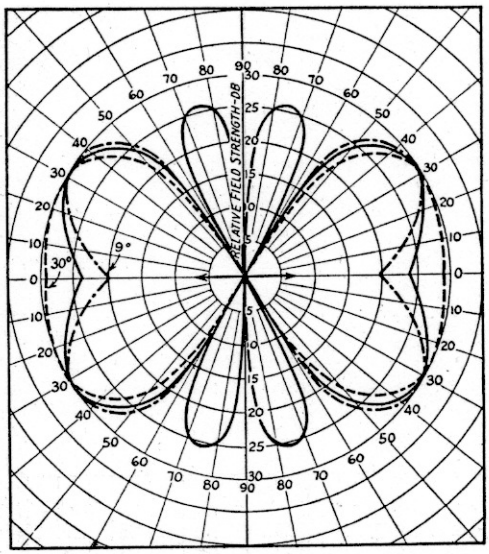

Fig. 1028 — Horizontal patterns of radiation from an antenna two wavelengths long. The solid line shows the pattern for a vertical angle of 15 degrees; dotted lines show deviation from the 15-degree pattern at 9 and 30 degrees. The minor lobes coincide for all three angles.

When the same antenna is used for work in several bands, it must be realized that the directional characteristic will depend on the band in use.

Simple systems — Any of the antenna arrangements shown in § 10-7 may be used for multi-band operation by making the antenna a half wave long at the lowest frequency to be used. The feeders should be a quarter wave, or some multiple of a quarter wave, long at the

TABLE I

MULTI-BAND RESONANT-LINE-FED ANTENNAS

Antenna Length (ft.)	*Feeder Length (ft.)*	*Band*	*Type of Tuning*
With end feed: 243	120	1.75-Mc. 'phone	series
		4-Mc. 'phone	parallel
		14 Mc.	parallel
		28 Mc.	parallel
136	67	3.5-Mc. c.w.	series
		7 Mc.	parallel
		14 Mc.	parallel
		28 Mc.	parallel
134	67	3.5-Mc. c.w.	series
		7 Mc.	parallel
67	33	7 Mc.	series
		14 Mc.	parallel
		28 Mc.	parallel
With center feed: 272	135	1.75 Mc.	parallel
		3.5 Mc.	parallel
		7 Mc.	parallel
		14 Mc.	parallel
		28 Mc.	parallel
137	67	3.5 Mc.	parallel
		7 Mc.	parallel
		14 Mc.	parallel
		28 Mc.	parallel
67.5	34	7 Mc.	parallel
		14 Mc.	parallel
		28 Mc.	parallel

The antenna lengths given represent compromises for harmonic operation because of different end effects on different bands. The 136-foot end-fed antenna is slightly long for 3.5 Mc., but will work well in the region which quadruples into the 14-Mc. band (3500-3600 kc.). Bands not listed are not recommended for the particular antenna. The center-fed systems are less critical as to length; the 272-foot antenna, for instance, may be used for both c.w. and 'phone on either 1.75 or 4 Mc. without loss of efficiency.

On harmonics, the end-fed and center-fed antennas will not have the same directional characteristics, as explained in the text.

same frequency. Typical examples, together with the type of tuning to be used, are given in Table I. The figures given represent a compromise designed to give satisfactory operation on all the bands considered, taking into account the change in required length as the order of the harmonic goes up.

A center-fed half-wave antenna will not operate as a long wire on harmonics, because of the phase reversal at the feeders previously mentioned (§ 10-9). On the second harmonic the two antenna sections are each a half wave long, and, since the currents are in phase, the directional characteristic is different from that of a full-wave antenna even though the over-all

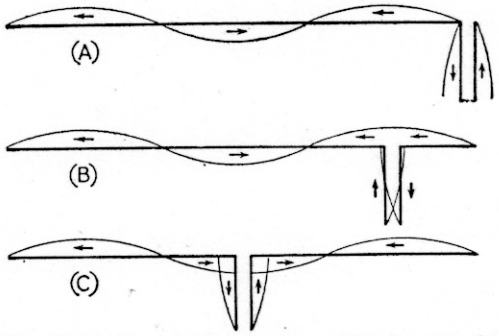

Fig. 1029 — Current distribution and feed points for long-wire antennas. A 3/2-wave antenna is used as an illustration. With two-wire feed, the line may be connected at the end of the antenna or at any current *loop* (but not at a current node) for harmonic operation.

length is the same. On the fourth harmonic each section is a full wave long, and, again because of the direction of current flow, the system will not operate as a two-wavelength antenna. It should not be assumed that these systems are not effective radiators; it simply means that the directional characteristic will not be that of a long wire having the same overall length. Rather, it will resemble the characteristic of one side of the antenna, although not necessarily having the same exact form.

Antennas with a few other types of feed systems may be operated on harmonics for the higher-frequency bands, although their performance is somewhat impaired. The single-wire-fed antenna (§ 10-8) may be used in this way; the feeder and antenna will not be matched exactly on harmonics, with the result that standing waves will appear on the feeder, but the system as a whole will radiate. A better match will be obtained if the point of connection of the feeder to the antenna is made exactly one-third the antenna length from one

Fig. 1030 — Required surge impedance of quarter-wave matching sections for radiators of various lengths. Curve A is for a transmission-line impedance of 440 ohms, Curve B is for 470 ohms, Curve C for 580 ohms and Curve D for 600 ohms. Dimensions for matching sections of the required impedance are obtained from Fig. 1009.

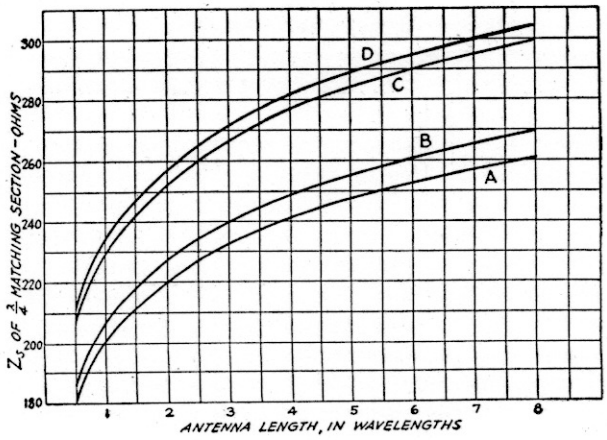

end. While this disagrees slightly with the figures given for a half-wave antenna, it has been found to work better on the harmonic frequencies. The "Q" antenna (§ 10-8) also can be operated on harmonics, but the line cannot

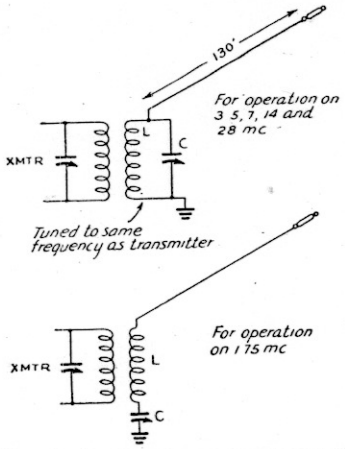

Fig. 1031 — A simple antenna system for five amateur bands. The antenna is voltage fed on 3.5, 7, 14 and 28 Mc., working on the fundamental, second, fourth and eighth harmonics, respectively. For 1.75 Mc. the system is a quarter-wave grounded antenna, in which case series tuning must be used. The antenna wire should be kept well in the clear and should be as high as possible. If the length of the antenna is increased to approximately 260 feet, voltage feed can be used on all five bands.

operate as a non-resonant line except at the fundamental frequency of the antenna. For harmonic operation the line must be tuned, and therefore the feeder length is important. The tuning system will depend upon the number of quarter waves on the line, including the "Q" bars. The concentric-line-fed antenna (§ 10-8) may be used on harmonics, if the concentric line is air-insulated. Its operation on harmonics is similar to that of the "Q." This antenna is not recommended for multi-band operation with a rubber-insulated line, however.

The delta-match system (§ 10-8) can be used on harmonics, although some standing waves will appear on the line. *Any* system can be used on harmonic frequencies by tying the feeders together at the transmitter end and feeding the system as a single wire by means of a tuned circuit coupled to the transmitter.

A simple antenna system, without feeders, for operation on five bands is shown in Fig. 1031. On all bands from 3.5 Mc. upward it operates as an end-fed antenna — half wave on 3.5 Mc., long wire on the other bands. On 1.75 Mc. it is only a quarter wave in length, and must be worked against ground (§ 10-14). On this band, since it is fed at a high-current point, series tuning (§ 10-6) must be used.

Antennas for restricted space — If the space available for the antenna is not large enough to accommodate the length necessary for a half wave at the lowest frequency to be used, quite satisfactory operation can be secured by using a shorter antenna and making up the missing length in the feeder system. The antenna itself may be as short as a quarter wavelength and still radiate fairly well, although of course it will not be as effective as one a half wave long. Nevertheless, such a system is useful where operation on the desired band otherwise would be impossible.

Resonant feeders are a practical necessity with such an antenna system, and a center-fed antenna will give best all-around performance. With end feed the feeder currents become badly unbalanced, and, since lengths midway between those requiring series or parallel tuning ordinarily must be used to bring the entire system to resonance, coupling to the transmitter often becomes difficult.

With center feed practically any convenient length of antenna can be used, if the feeder length is adjusted to accommodate at least one half wave around the whole system. Typical cases are shown in Fig. 1032, one for an antenna having a length of one quarter wave (A) and the other for an antenna somewhat longer (C) but still not a half wave long. Current distribution is shown for both fundamental and second harmonic. From the points marked *X*, resonant feeders any convenient number of quarter waves in length may be extended to the operating room. The sum of the distances on each wire from *X* to the antenna end must equal a half wave. It is sufficiently accurate to use Equation 2 (§ 10-2) in calculating this length. Note that *X*-*X* is a high-current point on these shortened antennas, corresponding to the center of a half-wave antenna. It is also apparent that the antenna

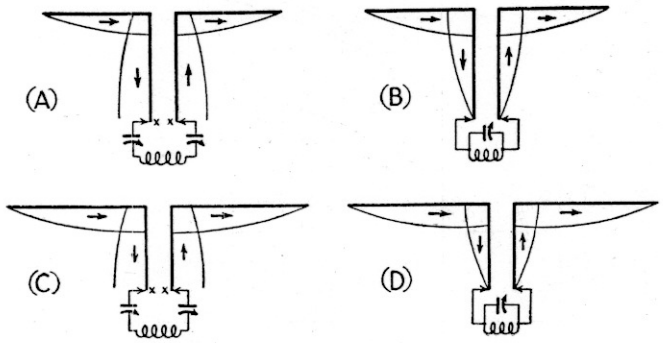

Fig. 1032 — Current distribution on short antennas. Those at the left are too short for fundamental operation, one (A) having an over-all length of one quarter wave; the other (C) being longer but not a half wave long. These systems may be used wherever space to erect a full half-wave antenna is not available. The current distribution for second-harmonic operation is shown at the right of each figure (B and D). In A and C, the total length around the system is a half wavelength at the fundamental frequency. In B and D, the over-all length is a full wave. Arrows show the instantaneous direction of current flow.

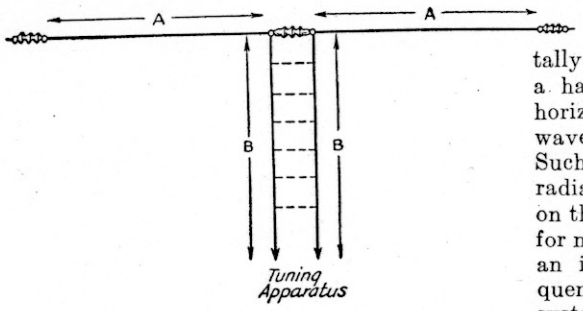

Fig. 1033 — Practical arrangement of a shortened antenna. The total length, A + B + B + A, should be a half wavelength for the lowest-frequency band, usually 3.5. Mc. See Table II for lengths and tuning data.

at A is a half-wave antenna on the next higher-frequency band (B).

A practical antenna of this type can be made as shown in Fig. 1033. Table II gives a few recommended lengths. Remembering the preceding discussion, however, the antenna can be made any convenient length, provided the feeder is considered to "begin" at *X*-*X* and the line length is adjusted accordingly.

Bent antennas — Since the field strength at a distance is proportional to the current in the antenna, the high-current part of a half-wave antenna (the center quarter wave, approximately) does most of the radiating (§ 10-1). Advantage can be taken of this fact when the space available does not permit erecting an antenna a half-wave long. In this case the ends may be bent, either horizontally or vertically, so that the total length equals a half wave, even though the straightaway horizontal length may be as short as a quarter wave. The operation is illustrated in Fig. 1034. Such an antenna will be a somewhat better radiator than the arrangement of Fig. 1032-A on the lowest frequency, but is not as desirable for multi-band operation because the ends play an increasingly important part as the frequency is raised. The performance of the system in such a case is difficult to predict, especially if the ends are vertical (the most convenient arrangement), because of the combination of horizontal and vertical polarization as well as dissimilar directional characteristics.

TABLE II

ANTENNA AND FEEDER LENGTHS FOR SHORT MULTI-BAND ANTENNAS, CENTER-FED

Antenna length (ft.)	*Feeder length (ft.)*	*Band*	*Type of tuning*
137	68	1.75 Mc. 3.5 Mc. 7 Mc. 14 Mc. 28 Mc.	series parallel parallel parallel parallel
100	38	3.5 Mc. 7 Mc. 14 Mc. 28 Mc.	parallel series series series or parallel
67.5	34	3.5 Mc. 7 Mc. 14 Mc. 28 Mc.	series parallel parallel parallel
50	43	7 Mc. 14 Mc. 28 Mc.	parallel parallel parallel
33	51	7 Mc. 14 Mc. 28 Mc.	parallel parallel parallel
33	31	7 Mc. 14 Mc. 28 Mc.	parallel series parallel

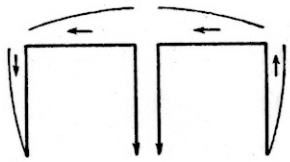

Fig. 1034 — Folded arrangement for shortened antennas. The total length is a half wave, not including the feeders. The horizontal part is made as long as convenient and the ends dropped down to make up the required length. The ends may be bent back on themselves like feeders to cancel radiation partially. The horizontal section should be at least a quarter-wave long.

¶ 10-11 Long-Wire Directive Arrays

The "V" antenna — It has been emphasized that, as the antenna length is increased, the lobe of maximum radiation makes a more acute angle with the wire (§ 10-9). Two such wires may be combined in the form of a horizontal "V" so that the main lobes from each wire will reinforce along a line bisecting the angle between the wires. This increases both gain and directivity, since the lobes in directions other than along the bisector cancel to a greater or lesser extent. The horizontal "V" antenna therefore transmits best in either direction (is bi-directional) along a line bisecting the "V" made by the two wires. The power gain depends upon the length of the wires. Provided the necessary space is available, the "V" is a simple antenna to build and operate. It can also be used on harmonics, so that it is suitable for multi-band work. The "V" antenna is shown in Fig. 1035.

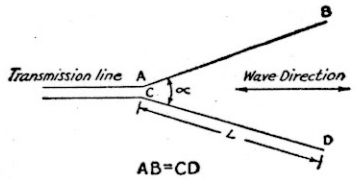

Fig. 1035 — The "V" antenna, made by combining two long wires in such a way that each reinforces the radiation from the other. The important quantities are the length of each leg and the angle between the legs.

Fig. 1036 shows the dimensions that should be followed for an optimum design to obtain maximum power gain for different-sized "V" antennas. The longer systems give good performance in multi-band operation. Angle α is approximately equal to twice the angle of maximum radiation for a single wire equal in length to one side of the "V."

The wave angle referred to in Fig. 1036 is the vertical angle of maximum radiation (§ 10-1). Tilting the whole horizontal plane of the "V" will tend to increase the low-angle radiation off the low end and decrease it off the high end.

The gain increases with the length of the wires, but is not exactly twice the gain for a single long wire as given in Fig. 1025. In the longer lengths the gain will be somewhat increased, because of mutual coupling between the wires. A "V" eight wavelengths on a leg, for instance, will have a gain of about 12 db. over a half-wave antenna, whereas twice the gain of a single 8-wavelength wire would be only approximately 9 db.

The two wires of the "V" must be fed out of phase, for correct operation. A resonant line may simply be attached to the ends, as shown in Fig. 1035. Alternatively, a quarter-wave matching section may be employed and the antenna fed through a non-resonant line (§ 10-8). If the antenna wires are made multiples of a half wave in length (use Equation 10, § 10-9, for computing the length), the matching section will be closed at the free end.

The rhombic antenna — The horizontal rhombic or "diamond" antenna is shown in Fig. 1037. Like the "V," it requires a good deal of space for erection, but it is capable of giving excellent gain and directivity. It also can be used for multi-band operation. In the terminated form shown in Fig. 1037, it operates like a non-resonant transmission line, without standing waves, and is uni-directional. It may also be used without the terminating resistor, in which case there are standing waves on the wires and the antenna is bi-directional.

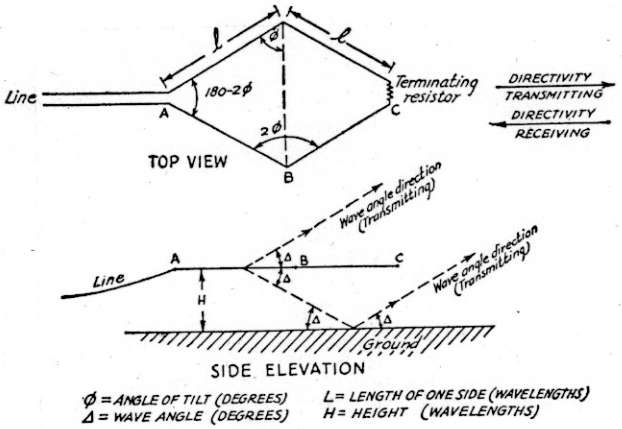

Fig. 1037 — The horizontal rhombic or diamond antenna, terminated. Important design dimensions are indicated; details in text.

The important quantities influencing the design of the rhombic antenna are shown in Fig. 1037. While several design methods may be used, the one most applicable to the conditions existing in amateur work is the so-called "compromise" method. The chart of Fig. 1038 gives design information based on a given length and wave angle to determine the remaining optimum dimensions for best operation. Curves for values of length of 2, 3 and 4 wavelengths are shown, and intermediate values may be interpolated.

With all other dimensions correct, an increase in length causes an increase in power gain and a slight reduction in wave angle. An increase in height also causes a reduction in wave angle and an increase in power gain, but not to the same extent as a proportionate increase in length.

For multi-band work, it is satisfactory to design the rhombic antenna on the basis of 14-Mc. operation, which will permit work on the 7- and 28-Mc. bands as well.

A value of 800 ohms is correct for the terminating resistor for any properly constructed rhombic, and the system behaves as a pure resistive load under this condition. The terminating resistor must be capable of safely dissipating one-half the power output (to eliminate the rear pattern), and should be non-inductive. Such a resistor may be made up from a carbon or graphite rod or from a long 800-ohm transmission line using resistance wire. If the carbon rod or a similar form of lumped resistance is used, the device should be suitably protected from weather effects, i.e., it should be covered with a good asphaltic compound and sealed in a

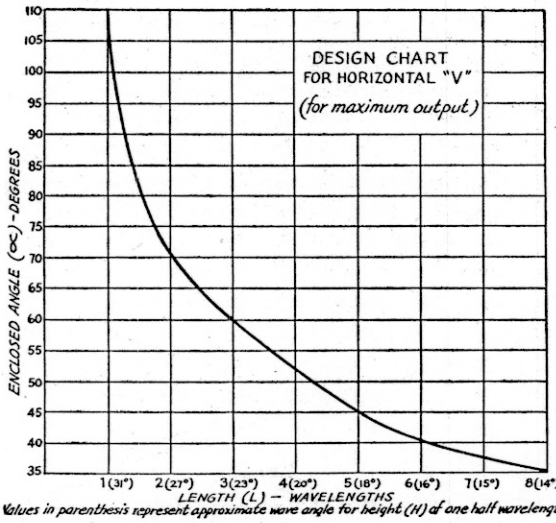

Fig. 1036 — Design chart for horizontal "V" antennas, giving the enclosed angle between sides vs. the length of the wires.

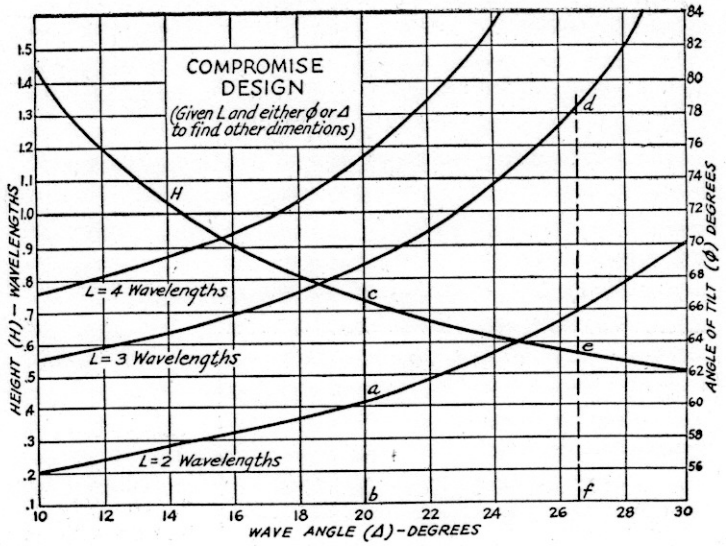

Fig. 1038 — Compromise-method design chart for rhombic antennas of various leg lengths and wave angles. The following examples illustrate the use of the chart:

(1) Given:
Length (L) = 2 wavelengths.
Desired wave angle (Δ) = 20°.
To Find: H, Φ.
Method:
Draw vertical line through point *a* (L = 2 wavelengths) and point *b* on abscissa (Δ = 20°.) Read angle of tilt (Φ) for point *a* and height (H) from intersection of line *ab* at point *c* on curve H.
Result:
Φ = 60.5°.
H = 0.73 wavelength.

(2) Given:
Length (L) = 3 wavelengths.
Angle of tilt (Φ) = 78°.
To Find: H, Δ.
Method:
Draw a vertical line from point *d* on curve L = 3 wavelengths at Φ = 78°. Read intersection of this line on curve H (point *e*) for height, and intersection at point *f* on the abscissa for Δ.
Result:
H = 0.56 wavelength.
Δ = 26.6°.

small, light-weight box or fibre tube. Suitable resistors are available commercially.

For feeding the antenna, the antenna impedance will be matched by an 800-ohm line, which may be constructed from No. 16 wire spaced 20 inches or from No. 18 wire spaced 16 inches. The 800-ohm line is somewhat ungainly to install, however, and may be replaced by an ordinary 600-ohm line with only a negligible mismatch. Alternatively, a matching section may be installed between the antenna terminals and a low-impedance line. However, when such an arrangement is used, it will be necessary to change the matching-section constants for each different band of operation.

The same design details apply to the unterminated rhombic as to the terminated type. Resonant feeders are preferable for the unterminated rhombic. A non-resonant line may be used by incorporating a matching section at the antenna, but is not readily adaptable to multi-band work.

Rhombic antennas will give a power gain of 10 db. or more, when constructed according to the charts given. In general, the larger the antenna, the greater the power gain.

¶ 10-12 Directive Arrays with Driven Elements

Principles — By combining individual half-wave antennas into an *array* with suitable spacing between the antennas (called *elements*) and feeding power to them simultaneously, it is possible to make the radiated fields from the individual elements add in a favored direction, thus increasing the field strength in that direction as compared to that produced by one antenna element alone. In other directions the fields will more or less oppose each other, giving a reduction in field strength. Thus a power gain in the desired direction is secured at the expense of a power reduction in other directions.

Besides the spacing between elements, the instantaneous direction of current flow (*phase*) in individual elements determines the directivity and power gain. There are several methods of arranging the elements. If they are strung end to end, so that all lie on the same straight line, the elements are said to be *collinear*. If they are parallel and all lying in the same plane, the elements are said to be *broadside* when the phase of the current is the same in all, and *end-fire* when the currents are not in phase. Elements which receive power from the transmitter through the transmission line are called *driven elements*.

The power gain of a directive system increases with the number of elements. The proportionality between gain and number of elements is not simple, however. The gain depends upon the effect which the spacing and phasing has upon the radiation resistance of the elements, as well as upon their number.

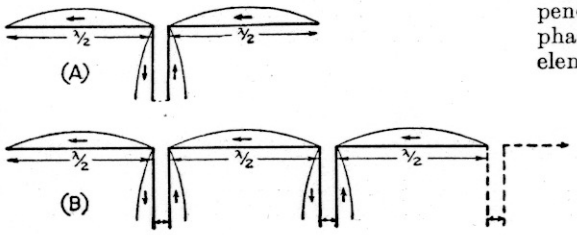

Fig. 1039 — Collinear half-wave antennas in phase. The system at A is generally known as "two half waves in phase." B is an extension of the system; in theory the number of elements may be carried on indefinitely, but practical considerations usually limit the elements to four.

Collinear arrays — Simple forms of collinear arrays, with the current distribution, are shown in Fig. 1039. The two-element array at A is popularly known as "two half waves in phase." It will be recognized as simply a center-fed antenna operated at its second harmonic. The way in which the number of elements may be extended for increased directivity and gain is shown in Fig. 1039-B. Note that quarter-wave transmission lines are used between each element; these give the reversal in phase necessary to make the currents in individual antenna elements all flow in the same direction at the same instant. Another way of looking at it is to consider that the whole system is a long wire, with alternate half-wave sections folded so that they do not radiate. Any phase-reversing section may be used as a quarter-wave matching section for attaching a non-resonant feeder (§ 10-8), or a resonant transmission line may be substituted for any of the quarter-wave sections. Also, the antenna may be end-fed by any of the systems previously described (§ 10-7, 10-8), or any element may be center-fed. It is best to feed at the center of the array, so that the energy will be distributed as uniformly as possible among the elements.

TABLE III

THEORETICAL GAIN OF COLLINEAR HALF-WAVE ANTENNAS

Spacing between centers of adjacent half waves	*Number of half waves in array vs. gain in db.*				
	2	3	3	5	6
½ Wave	1.8	3.3	4.5	5.3	6.2
¾ Wave	3.2	4.8	6.0	7.0	7.8

The gain and directivity depend upon the number of elements and their spacing, center-to-center. This is shown by Table III. Although ¾-wave spacing gives greater gain, it is difficult to construct a suitable phase-reversing system when the ends of the antenna elements are widely separated. For this reason, the half-wave spacing is most generally used in actual practice.

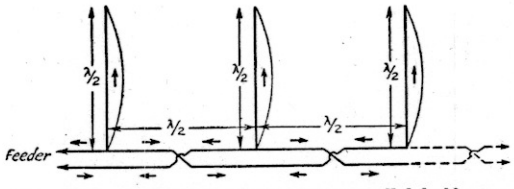

Fig. 1040 — Broadside array using parallel half-wave elements. Arrows indicate the direction of current flow. Transposition of the feeders is necessary to bring the antenna currents in phase. Any reasonable number of elements may be used. The array is bi-directional, with maximum radiation "broadside" or perpendicular to the plane of the antennas (perpendicularly through this page).

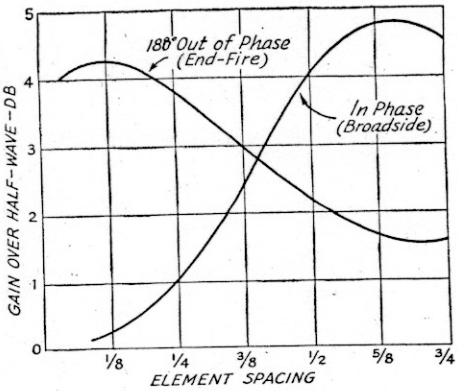

Fig. 1041 — Gain vs. spacing for two parallel half-wave elements combined as either broadside or end-fire arrays.

Collinear arrays may be mounted either horizontally or vertically. Horizontal mounting gives increased horizontal directivity, while the vertical directivity remains the same as for a single element at the same height. Vertical mounting gives the same horizontal pattern as a single element, but concentrates the radiation at low angles. It is seldom practicable to use more than two elements vertically at frequencies below 14 Mc. because of the excessive height required.

TABLE IV

THEORETICAL GAIN VS. NUMBER OF BROADSIDE ELEMENTS (HALF-WAVE SPACING)

No. of elements	*Gain*
2	4 db.
3	5.5 db.
4	7 db.
5	8 db.
6	9 db.

Broadside arrays — Parallel antenna elements with currents in phase may be combined as shown in Fig. 1040 to form a *broadside* array, so named because the direction of maximum radiation is broadside to the plane containing the antennas. Again the gain and directivity depend upon the number of elements and the spacing, the gain for different spacings being shown in Fig. 1041. Half-wave spacing generally is used, since it simplifies the problem of feeding the system when the array has more than two elements. Table IV gives theoretical gain as a function of the number of elements with half-wave spacing.

Broadside arrays may be suspended either with the elements all vertical or with them horizontal and one above the other (*stacked*). In the former case the horizontal pattern becomes quite sharp, while the vertical pattern is the same as that of one element alone. If the array is suspended horizontally, the horizontal pattern is equivalent to that of one element

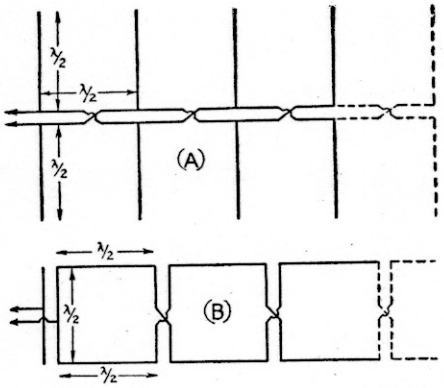

Fig. 1042 — Combination broadside and collinear arrays. A, with vertical elements; B, with horizontal elements. Both arrays give low-angle radiation. Two or more sections may be used. The gain in db. will be equal, approximately, to the sum of the gain for one set of broadside elements (Table IV) plus the gain of one set of collinear elements (Table III). For example, in A each broadside set has four elements (gain 7 db.) and each collinear set two elements (gain 1.8 db.), giving a total gain of 8.8 db. In B, each broadside set has two elements (gain 4 db.) and each collinear set three elements (gain 3.3 db.), making the total gain 7.3 db. The result is not strictly accurate, because of mutual coupling between the elements, but is good enough for practical purposes.

while the vertical pattern is sharpened, giving low-angle radiation.

Broadside arrays may be fed either by resonant transmission lines (§ 10-7) or through quarter-wave matching sections and non-resonant lines (§ 10-8). In Fig. 1040, note the "crossing over" of the feeders, which is necessary to bring the elements in proper phase relationship.

Combined broadside and collinear arrays — Broadside and collinear arrays may be combined to give both horizontal and vertical directivity, as well as additional gain. The general plan of constructing such antennas is shown in Fig. 1042. The lower angle of radiation resulting from stacking elements in the vertical plane is desirable at the higher frequencies. In general, doubling the number of elements in an array by stacking will raise the gain from 2 to 4 db., depending upon whether vertical or horizontal elements are used — that is, whether the stacked elements are of the broadside or collinear type.

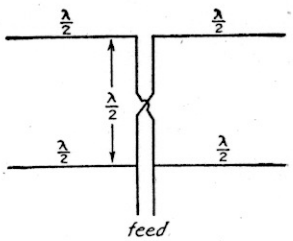

Fig. 1043 — A four-element combination broadside-collinear array, popularly known as the "lazy H" antenna. A closed quarter-wave stub may be used at the feed point to match into a 600-ohm transmission line, or resonant feeders may be attached at the point indicated. The gain over a half-wave antenna is 5 to 6 db.

The arrays in Fig. 1042 are shown fed from one end, but this is not especially desirable in the case of large arrays. Better distribution of energy between elements, and hence better all-around performance, will result when the feeders are attached as nearly as possible to the center of the array. Thus, in the 8-element array at A, the feeders could be introduced at the middle of the transmission line between the second and third set of elements, in which case the connecting line would not be transposed. Alternatively, the antenna could be constructed with the transpositions as shown and the feeder connected between the adjacent ends of either the second or third pair of collinear elements.

A four-element array of the general type shown in Fig. 1042-B, known as the "lazy H" antenna, has been quite frequently used. This arrangement is shown, with the feed point indicated, in Fig. 1043.

End-fire arrays — Fig. 1044 shows a pair of parallel half-wave elements with currents out of phase. This is known as an *end-fire* array, because it radiates best along the line of the antennas, as shown.

The end-fire array may be used either vertically or horizontally (elements at the same height), and is well adapted to amateur work because it gives maximum gain with relatively close element spacing. Fig. 1041 shows how the gain varies with spacing. End-fire elements may be combined with additional collinear and broadside elements to give a further increase in gain and directivity.

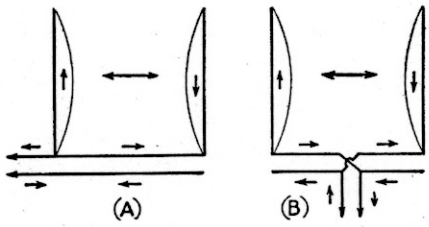

Fig. 1044 — End-fire arrays using parallel half-wave elements. The elements are shown with half-wave spacing to illustrate feeder connections. In practice, closer spacings are desirable, as shown by Fig. 1041. Direction of maximum radiation is shown by the large arrows.

Either resonant or non-resonant lines may be used with this type of array. Non-resonant lines preferably are matched to the antenna through a quarter-wave matching section (§ 10-8).

Checking phasing — Figs. 1042 and 1044 illustrate a point in connection with feeding a phased antenna system which sometimes is confusing. In Fig. 1044, when the transmission line is connected as at A there is no cross-over in the line connecting the two antennas, but when the transmission line is connected to the center of the connecting line the cross-over becomes necessary (B). This is because in B the two halves of the connecting line are simply *branches* of the same line. In other

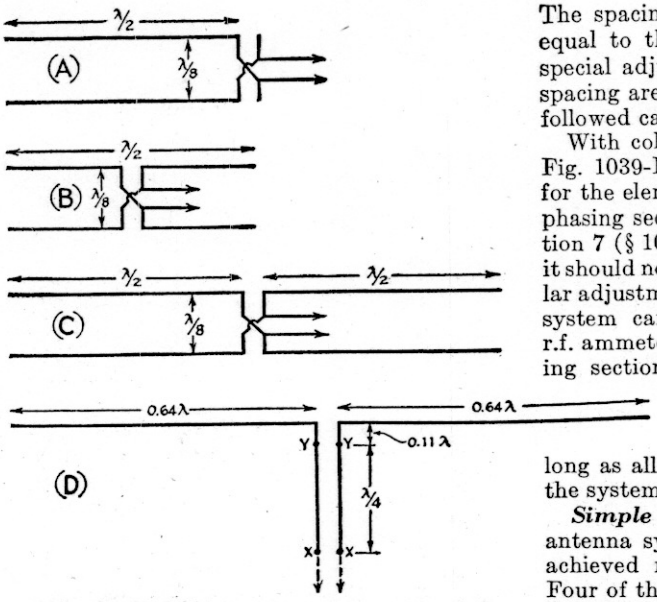

Fig. 1045 — Simple directive antenna systems. A is a two-element end-fire array; B is the same array with center feed, which permits use of the array on the second harmonic, where it becomes a four-element array with quarter-wave spacing. C is a four-element end-fire array with ⅛-wave spacing. D is a simple two-element broadside array using extended in-phase antennas ("extended double-Zepp"). The gain of A and B is slightly over 4 db. On the second harmonic, B will give about 5 db. gain. With C, the gain is approximately 6 db., and with D, approximately 3 db. In A, B and C, the phasing line contributes about 1/16th wavelength to the transmission line; when B is used on the second harmonic, this contribution is ⅛ wavelength. Alternatively, the antenna ends may be bent to meet the transmission line, in which case each feeder is simply connected to one antenna. In D, points *Y-Y* indicate a quarter-wave point (high current) and *X-X* a half-wave point (high voltage). The line may be extended in multiples of quarter waves, if resonant feeders are to be used. A, B, and C may be suspended on wooden spreaders. The plane containing the wires should be parallel to the ground.

words, even though the connecting line in B is a half wave in length, it is not actually a half-wave line but *two quarter-wave lines in parallel.* The same thing is true of the untransposed line of Fig. 1042. Note that, under these conditions, the antenna elements are in phase when the line is not transposed, and out of phase when the transposition is made. The opposite is the case when the half-wave line simply joins two antenna elements and does not have the feed line connected to its center, as in Fig. 1040.

Adjustment of arrays — With arrays of the types just described, using half-wave spacing between elements, it will usually suffice to make the length of each element that given by the equation for a half-wave antenna in § 10-2, while the half-wave phasing lines between the parallel elements can be calculated from the formula:

$$\text{Length of half-wave line (feet)} = \frac{492 \times 0.975}{\text{Freq. (Mc.)}} = \frac{480}{\text{Freq. (Mc.)}}$$

The spacing between elements can be made equal to the length of the phasing line. No special adjustments line or element length or spacing are needed, provided the formulas are followed carefully.

With collinear arrays of the type shown in Fig. 1039-B, the same formula may be used for the element length while the quarter-wave phasing section can be calculated from Equation 7 (§ 10-5). If the array is fed at its center it should not be necessary to make any particular adjustments, although, if desired, the whole system can be resonated by connecting an r.f. ammeter in the shorting link on each phasing section and moving the link back and forth to find the maximum current position. This refinement is hardly necessary in practice, however, so long as all elements are the same length and the system is symmetrical.

Simple arrays — Several simple directive antenna systems using driven elements have achieved rather wide use among amateurs. Four of these systems are shown in Fig. 1045. Tuned feeders are assumed in all cases; however, a matching section (§ 10-8) readily can be substituted if a non-resonant transmission line is preferred. Dimensions given are in terms of wavelength; actual lengths can be calculated from the equations in § 10-2 for the antenna and from Equation 7 (§ 10-5) for the resonant transmission line or matching section In cases where the transmission-line proper connects to the mid-point of a phasing line, only *half* the length of the latter should be added to the line to find the quarter-wave point.

At A and B are two-element end-fire arrangements using close spacing. They are electrically equivalent; the only difference is in the method of connecting the feeders. B may also be used as a four-element array on the second harmonic, although the spacing is not quite optimum (Fig. 1041) for such operation.

A close-spaced four-element array is shown at C. It will give about 2 db. more gain than the two-element array.

The antenna at D, commonly known as the "extended double Zepp," is designed to take advantage of the greater gain possible with collinear antennas having greater than half-wave center-to-center spacing, but without introducing feed complications. The elements are made longer than a half wave in order to bring this about. The gain is 3 db. over a single half-wave antenna, and the broadside directivity is quite sharp.

The antennas of A and B may be mounted either horizontally or vertically; horizontal suspension (with the elements in a plane parallel to the ground) is recommended, since this tends to give low-angle radiation without an unduly sharp horizontal pattern. Thus these systems are useful for coverage over a wide horizontal angle. The system at C, when mounted horizontally, will have a sharper horizontal pattern than the two-element arrays.

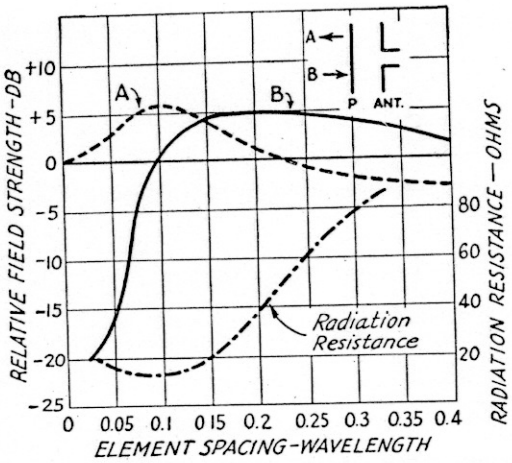

Fig. 1046 — Gain vs. element spacing for an antenna and one parasitic element. The reference point, 0 db. is the field strength from a half-wave antenna alone. The greatest gain is in direction A at spacings of less than 0.14 wavelength, and in direction B at greater spacings. The front-to-back ratio is the difference in db. between curves A and B. Variation in radiation resistance of the driven element also is shown. These curves are for a self-resonant parasitic element. At most spacings the gain as a reflector can be increased by slight lengthening of the parasitic element; the gain as a director can be increased by shortening. This also improves the front-to-back ratio.

¶ 10-13 Directive Arrays with Parasitic Elements

Parasitic excitation — The antenna arrays described in § 10-12 are bi-directional; that is, they will radiate in directions both to the "front" and to the "back" of the antenna system. If radiation is wanted in only one direction (for instance, north only, instead of north-south), it is necessary to use different element arrangements. In most of these arrangements the additional elements receive power by induction or radiation from the driven element, generally called the "antenna," and re-radiate it in the proper phase relationship to achieve the desired effect. These elements are called *parasitic* elements, as contrasted to the driven elements which receive power directly from the transmitter through the transmission line.

The parasitic element is called a *director* when it reinforces radiation on a line pointing to it from the antenna, and a *reflector* when the reverse is the case. Whether the parasitic element is a director or reflector depends upon the parasitic element tuning (which usually is adjusted by changing its length), and, particularly when the element is self-resonant, upon the spacing between it and the antenna.

Gain vs. spacing — The gain of an antenna-reflector or an antenna-director combination varies chiefly with the spacing between the elements. The way in which gain varies with spacing is shown in Fig. 1046, for the special case of self-resonant parasitic elements. This chart also shows how the attenuation to the "rear" varies with spacing. The same spacing does not necessarily give both maximum forward gain and maximum backward attenuation. Backward attenuation is desirable when the antenna is used for receiving, since it greatly reduces interference coming from the opposite direction to the desired signal.

Element lengths — The antenna length is given by the formulas in § 10-2. The director and reflector lengths must be determined experimentally for maximum performance. The preferable method is to aim the antenna at a receiver a mile or more distant and have an observer check the signal strength (on the "S" meter) while the reflector or director is adjusted a few inches at a time, until the length which gives maximum signal is found. The attenuation may be similarly checked, the length being adjusted for minimum signal. In general, for best front-to-back ratio the length of a director will be about 4 per cent less than that of the antenna. The reflector will be about 5 per cent longer than the antenna.

Simple systems; the rotary beam — Four practical combinations of antenna, reflector and director elements are shown in Fig. 1047. Spacings which give maximum gain or maximum front-to-back ratio (ratio of power radiated in the desired direction to power radiated in the opposite direction) may be taken from Fig. 1046. In the chart, the front-to-back ratio in db. will be the sum of gain and attenuation at the same spacing.

Systems of this type are popular for rotary-beam antennas, where the entire antenna system is rotated, to permit its gain and directiv-

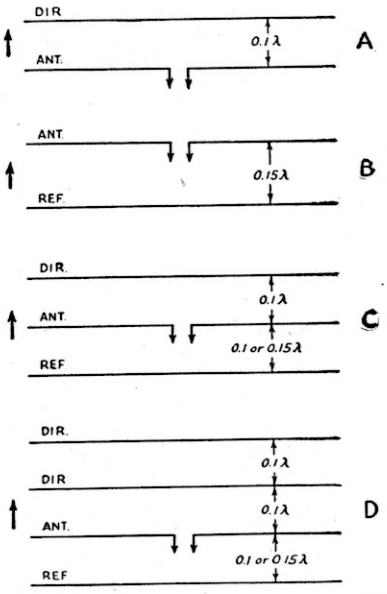

Fig. 1047 — Half-wave antennas with parasitic elements. A, with reflector; B, with director; C, with both director and reflector; D, two directors and one reflector. Gain is approximately as shown by Fig. 1046, in the first two cases, and depends upon the spacing and length of the parasitic element. In the three- and four-element arrays a reflector spacing of 0.15 wavelength will give slightly more gain than 0.1-wavelength spacing. Arrows show direction of maximum radiation. The array should be mounted horizontally (top views are shown).

ity to be utilized for any compass direction. They may be mounted either horizontally (with the plane containing the elements parallel to the earth) or vertically.

Arrays using more than one parasitic element, such as those shown at C and D in Fig. 1047, will give more gain and directivity than is indicated for a single reflector and director by the curves of Fig. 1046. The gain with a properly adjusted three-element array (antenna, director and reflector) will be 5 to 7 db. over a half-wave antenna. Somewhat higher gain still can be secured by adding a second director to the system, making a four-element array. The front-to-back ratio is correspondingly improved as the number of elements is increased.

The elements in close-spaced (less than one-quarter wavelength element spacing) arrays preferably should be made of tubing of one-half- to one-inch diameter, both to reduce the ohmic resistance (§ 10-2) of the conductors and to secure mechanical rigidity. If the elements are free to move with respect to each other, the array will tend to show detuning effects under windy conditions.

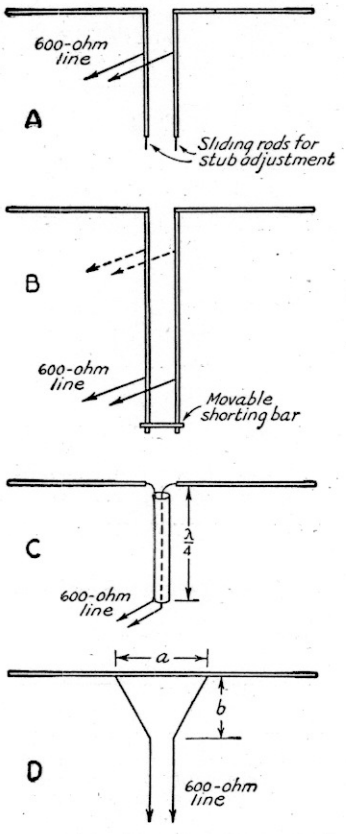

Fig. 1048 — Recommended methods of feeding the driven antenna element in close-spaced parasitic arrays. The parasitic elements are not shown. A, quarter-wave open stub; B, half-wave closed stub; C, concentric-line quarter-wave matching section; D, delta matching transformer. Adjustment details are discussed in the text.

Feeding close-spaced arrays — While any of the usual methods of feed may be applied to the driven element of a parasitic array, the fact that, with close spacing, the radiation resistance as measured at the center of the driven element drops to a very low value makes some systems more desirable than others. The preferred methods are shown in Fig. 1048. Resonant feeders are not recommended for lengths greater than a half wavelength.

The quarter- or half-wave matching stubs shown at A and B in Fig. 1048 preferably should be constructed of tubing with rather close spacing, in the manner of the "Q" section. This lowers the impedance of the matching section and makes the position of the line taps somewhat less difficult to determine accurately. The line adjustment should be made only with the parasitic elements in place, and after the correct element lengths have been determined, it should be checked to compensate for changes likely to occur because of element tuning. The procedure is the same as that described in § 10-8.

The concentric-line matching section at C will work with fair accuracy into a close-spaced parasitic array of 2, 3 or 4 elements without necessity for adjustment. The line is used as an impedance-inverting transformer, and, if its characteristic impedance is 70 ohms, it will give an exact match to a 600-ohm line when the resistance at the termination is about 8.5 ohms. Over a range of 5 to 15 ohms the mismatch, and therefore the standing-wave ratio, will be less than 2 to 1. The length of the quarter-wave section may be calculated from Equation 7 (§ 10-5).

The delta matching transformer shown at D is an excellent arrangement for parasitic arrays, and is probably easier to install, mechanically, than any of the others. The positions of the taps (dimension *a*) must be determined experimentally, along with the length, *b*, by checking the standing-wave ratio on the line as adjustments are made. Dimension *b* should be about 15 per cent longer than *a*.

Sharpness of resonance — Peak performance of a multi-element directive array depends upon proper phasing or tuning of the elements, which in all but the simplest systems can be exact for one frequency only. However, there is some latitude, and most arrays will work well over a relatively narrow region such as the 14 Mc. band. If frequencies in all parts of the band are to be used, the antenna system should be designed for the mid-frequency; on the other hand, if only one frequency in the band will be used for the greater portion of the time, the antenna might be designed for that frequency and some degree of misadjustment tolerated on the occasionally used spare frequencies.

When reflectors or directors are used the tolerance is usually less than in the case of driven elements, partly because the parasitic-element lengths are fixed and the operation may change appreciably as the frequency passes from one side of resonance to the other, and partly be-

cause the close spacing ordinarily used results in a sharp-tuning system. With parasitic elements, operation should be confined to a small region about the frequency for which the antenna is adjusted if peak performance is to be secured.

Combination arrays — It is possible to combine parasitic elements with driven elements to form arrays composed of collinear driven and parasitic elements and combination broadside-collinear-parasitic elements. Thus two or more collinear elements might be provided with a collinear reflector or director set, one parasitic element to each driven element. Or both directors and reflectors might be used. A broadside-collinear array could be treated in the same fashion.

When combination arrays are built up, a rough approximation of the gain to be expected may be obtained by adding the gains for each type of combination. Thus the gain of two broadside sets of four collinear arrays with a set of reflectors, one behind each element, at quarter-wave spacing for the parasitic elements, would be estimated as follows: From Table III, the gain of four collinear elements is 4.5 db. with half-wave spacing; from Fig. 1041 or Table IV, the gain of two broadside elements at half-wave spacing is 4.0 db.; from Fig. 1046, the gain of a parasitic reflector at quarter-wave spacing is 4.5 db. The total gain is then the sum, or 13 db. for the sixteen elements. Note that using two *sets* of elements in broadside is equivalent to using two elements, so far as gain is concerned; similarly with sets of reflectors, as against one antenna and one reflector. The actual gain of the combination array will depend, in practice, upon the way in which the power is distributed between the various elements and upon the effect which mutual coupling between elements has upon the radiation resistance of the array, and may be somewhat higher or lower than the estimate.

A great many directive antenna combinations can be worked out by combining elements according to these principles.

10-14 Miscellaneous Antenna Systems

Grounded antenna — The grounded antenna is used almost exclusively for 1.75-Mc. work, where the length required for a half-wave antenna would be excessive for most locations. An antenna worked "against ground" need be only a quarter-wave long, approximately, because the earth acts as an electrical "mirror" which supplies the missing quarter wave. The current is maximum at the ground connection with a quarter-wave antenna, just as it is at the center of a half-wave antenna.

On 1.75 Mc. the most useful radiation is from the vertical part of the antenna, since vertically polarized waves are characteristic of ground-wave transmission. It is therefore desirable to make the down-lead as nearly vertical as possible, and also as high as possible. This gives low-angle sky-wave transmission, which is most useful for long-distance work at night, in addition to a good ground wave for local work. The horizontal portion contributes to high-angle sky-wave transmission, which is useful for covering short distances on this band at night.

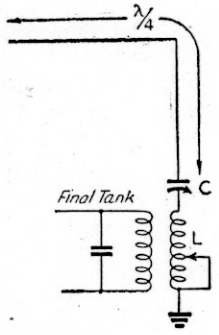

Fig. 1049 — Typical grounded antenna for 1.75 Mc., consisting of a vertical section and a horizontal section having a total length (including the ground lead, if the latter is more than a few feet long) of one-quarter wavelength. Coil L should have about 20 turns of No. 12 wire on a 3-inch diameter form, tapped every two or three turns for adjustment. C is a 250 to 500 $\mu\mu fd.$ variable. The inductive coupling between L and the final tank coil should be variable.

Fig. 1049 shows a grounded antenna with the top folded to make the length equal to a quarter wave. The antenna coupling apparatus consists of the coil, L, tuned by the series condenser, C, with L inductively coupled to the transmitter tank circuit (§ 10-4, 10-6).

For computation purposes, the *over-all* length of a grounded system is given by

$$\text{Length (feet)} = \frac{236}{f\ (Mc.)}$$

This is the *total* length from the far end of the antenna to the ground connection. The length is not critical, since departures of the order of 10 to 20 per cent can be compensated by the tuning apparatus.

The ground should preferably be one with conductors buried deep enough to reach natural moisture. In urban locations, good grounds can be made by connecting to the water mains where-they enter the house; the pipe should be scraped clean and a low-resistance connection made with a tightly fastened ground clamp. If no water supply pipes are available, several rods or pipes six to eight feet long may be driven into the ground at intervals of six or eight feet, all being connected together. The transmitter should be located so as to make the ground lead as short as possible.

In locations where it is impossible to secure a good ground connection, because of sandy soil or other considerations, it is preferable to use a counterpoise or capacity ground instead of an actual ground connection. The counterpoise consists of a system of wires, insulated from ground and running horizontally above the earth beneath the antenna. The counterpoise should have a sufficient number of wires of sufficient length to cover well the area immediately under the antenna. The wires may be formed into any convenient shape; i.e., they may be spread out fan-shape, in a radial pattern, or as three or more parallel wires sepa-

rated a few feet and running beneath the antenna. The counterpoise may be elevated six feet or so above the ground, so that it will not interfere with persons walking under it. A low-resistance connection should be made between the usual ground terminal of the transmitter and each of the wires in the counterpoise.

"J" antenna — This type of antenna, frequently used on the very-high frequencies when vertical polarization is desired, is simply a half-wave radiator fed through a quarter-wave matching section, (§ 10-8), the whole being mounted vertically as shown in Fig. 1050. Adjustment and tuning are as described in § 10-8. The bottom of the matching section, being at practically zero r.f. potential, can be grounded through a metallic conductor for lightning protection.

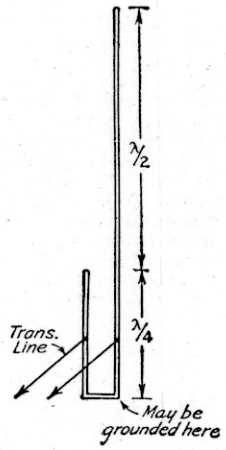

Fig. 1050 — **The "J" antenna. It is usually constructed of metal tubing, frequently with the ¼-wave vertical section mounted as an extension of a grounded metal mast. The stub may be adjusted by a sliding shorting bar.**

Coaxial antenna — With the "J" antenna there is likely to be some radiation from the matching section and the transmission line, which tends to combine with the radiation from the antenna in such a way as to raise the angle of radiation. As this is undesirable at very-high frequencies, where the lowest possible radiation angle is essential, the coaxial antenna shown in Fig. 1051 was developed to eliminate feeder radiation. The center conductor of a 70-ohm concentric transmission line is extended one quarter wave beyond the end of the line, to act as the upper half of a half-wave antenna. The lower half is provided by the quarter-wave sleeve, the upper end of which is connected to the outer conductor of the concentric line. The sleeve acts as a shield about the transmission line and very little current is induced on the outside of the line by the antenna field. The line is non-resonant, since its characteristic impedance is the same as the center impedance of the half-wave antenna (§ 10-2). The sleeve may be made of copper or brass tubing of suitable diameter to clear the transmission line. The coaxial antenna is somewhat difficult to construct, but is superior to simpler systems at low radiation angles.

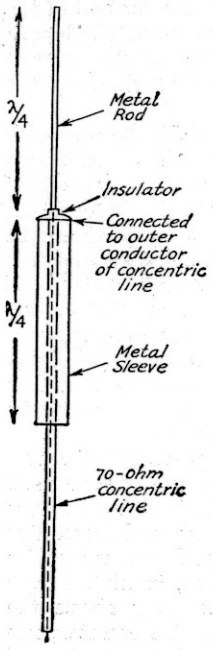

Fig. 1051 — **Coaxial antenna. The insulated inner conductor of the 70-ohm concentric line is connected to the quarter-wave metal rod which forms the upper half of the antenna.**

Folded dipole — An arrangement which combines the radiation characteristics of a half-wave antenna with the impedance-transforming properties of a quarter-wave line (§ 10-5) is shown in Fig. 1052. Essentially, it consists of a center-fed half-wave antenna with another half-wave element connected directly between its ends. The spacing between the two sections should be quite close — not more than a few per cent of the wavelength. As used at very-high frequencies, the spacing is of the order of an inch or two when the elements are constructed of metal tubing.

The impedance at the terminals of the antenna is four times that of a half-wave antenna, or nearly 300 ohms, when the antenna conductors all are the same diameter. A 300-ohm line will therefore be non-resonant when the antenna is connected to its output end (§ 10-5), while the standing-wave ratio with a 600-ohm line will be only of the order of 2 to 1.

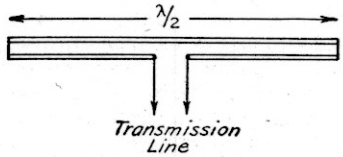

Fig. 1052 — **Folded dipole for increasing the value of impedance at the feed point to match a transmission line.**

The total required length around the loop formed by the antenna may be calculated by Equation 10 (§ 10-9) for a total length of one wavelength.

Corner reflector antenna — A type of antenna system particularly well-suited to the v.h.f. ranges above 56 Mc., is the "corner" reflector, shown in Fig. 1053. It consists of two plane surfaces set at an angle of 90°, with the antenna set on a line bisecting this angle. For maximum performance, the distance of the antenna from the vertex should be 0.5 wavelength, but compromise designs can be built with closer spacings (see Table V). The plane surfaces need not be solid sheets, and can most easily be made of spines spaced about 0.1 wavelength apart. The spines do not have to be connected together electrically.

The resistance of the antenna is raised when a corner reflector is used. The transmission line should be run out at the rear of the reflector, to keep the system as symmetrical as possible and thus avoid any unbalance. Two simple antennas which can be used with the corner reflector are shown in Fig. 1054.

The corner reflector can be used with the antenna either horizontal or vertical, and the

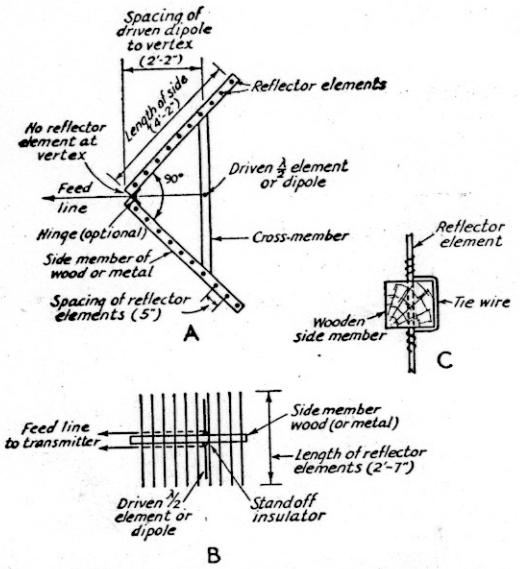

Fig. 1053 — A corner reflector antenna system with a spine- or grid-type reflector. The reflector elements are made of stiff wire or tubing. The dimensions shown are for 224 Mc., and should be doubled for 112 Mc. (See Table V.) The gain of the system is close to 10 db.

plane of polarization will be the plane of the antenna. The relative positions of the antenna and reflector must remain the same, however, which means that a support for both horizontal and vertical polarization would require a means for rotating the reflector about its horizontal axis.

Receiving antennas — Nearly all of the properties possessed by an antenna as a radiator also apply when it is used as a receiving antenna. Current and voltage distribution, impedance and resistance, and directional characteristics are the same in a receiving antenna as they would be if it were used as a transmitting antenna. This reciprocal behavior makes possible the design of a receiving antenna of optimum performance based on the same considerations as have been discussed for transmitting antennas.

The simplest form of receiving antenna is a wire of random length, which acts as a conductor in the field of the radiated wave and in which distributed voltages are induced by the wave. The longer the wire, the greater the energy it abstracts from the wave. Because of the high sensitivity of modern receivers, a large antenna is not necessary for picking up signals at good strength. An indoor wire only 15 to 20 feet long will give quite good results, although a longer wire outdoors is better.

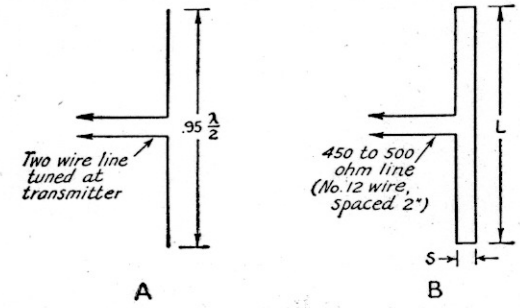

Fig. 1054 — Dipoles suitable for use with the corner reflector antenna system. The radiator length, *L*, is 25 inches for 224 Mc., and *s* = 1 inch for the same band.

The use of a tuned antenna greatly improves the operation of the receiver, because the signal strength is greater in proportion to the stray noises picked up by the antenna than is the case with wires of random length. Since the transmitting antenna usually is given the best location, it can also be used to great advantage for receiving. This is especially true when a directive antenna is used. A change-over switch or relay, connected in the antenna leads, can be used to transfer the connections from the receiver to the transmitter while the latter is on the air. The directional effects and power gain of directive transmitting antennas are the same for receiving as for transmitting.

TABLE V

Frequency Band	Length of Side	Length of Reflector Elements	Number of Reflector Elements	Spacing of Reflector Elements	Spacing of Driven Dipole to Vertex
224–230 Mc. (1¼ meter)	4′ 2″	4′ 7″	20	5″	2′ 2″
112–116 Mc. (2½ meter)	8′ 4″	5′ 2″	20	10″	4′ 4″
112–116 Mc.* (2½ meter)	6′ 8″	5′ 2″	16	10″	3′ 6″
56–60 Mc. (5 meter)	16′ 8″	10′ 4″	20	1′ 8″	8′ 8″
56–60 Mc.* (5 meter)	13′ 4″	10′ 4″	16	1′ 8″	6′ 11″

Dimensions of square-corner reflector for the 224-, 112-, and 56-Mc. bands. Alternative designs are listed for the 112- and 56-Mc. bands. These designs, marked (*), have fewer reflector elements and shorter sides, but the effectiveness is only slightly reduced. There is no reflector element at the vertex in any of the designs.

In selecting a directional receiving antenna it is preferable to choose a type which gives very little response in all but the desired direction (small minor lobes). This is even more important than high gain in the desired direction, because the cumulative response to noise and unwanted-signal interference in the smaller lobes may offset the advantage of increased desired-signal gain.

The auxiliary elements in the antenna system — transmission line and receiver coupling — should be arranged to avoid direct pick-up of undesired-signal or noise energy, which would impair the directivity. This requires a balanced transmission line without standing waves, a carefully shielded and balanced receiver input circuit, and a good ground on the receiver.

CHAPTER ELEVEN

Receiver Construction

A One-Tube Regenerative Receiver

THE SIMPLEST receiver capable of giving at all satisfactory results in everyday operation is one consisting of a regenerative detector followed by an audio amplifier. This type of receiver is adequate for headphone reception, and is quite easy to build and adjust. A dual tube may be used for both stages, thereby reducing cost.

Figs. 1101 to 1105 show such a receiver. It uses a 6C8G twin-triode tube, one triode section being the regenerative detector and the other the audio amplifier. The circuit diagram is given in Fig. 1103. The grid coil, L_1, is tuned to the frequency of the incoming signal by means of condensers C_1 and C_3, C_1 being the band-setting or general coverage condenser and C_3 the bandspread condenser. Regeneration is supplied by means of the tickler coil, L_2; the variable plate by-pass condenser, C_2, is the regeneration control. The receiver is coupled to the antenna through C_5, a low-capacity trimmer condenser. R_1 and C_4 are the grid leak and grid condenser.

The audio amplifier section of the tube is coupled to the detector by the audio transformer, T_1. Bias for the audio stage is supplied by a midget flashlight cell, this type of bias being quite convenient as well as cheaper than other methods. The choke, *RFC*, is necessary to prevent r.f. current from flowing in the primary winding of the audio transformer; without the r.f. choke, the regeneration control condenser, C_2, may be ineffective. A switch, S_1, is provided for turning off the "B" supply when transmitting.

This receiver is laid out so that it can be converted into the two-tube superheterodyne described in the next section, using most of the same parts over again and utilizing the same chassis and panel. The superhet will give improved performance, but is a little more difficult to build and adjust. By building the one-tube receiver first, the beginner will acquire experience in the operation of regenerative circuits which will be helpful in building and using the two-tube receiver.

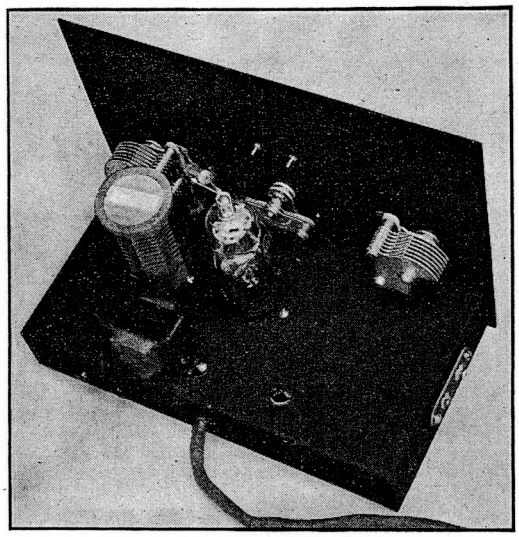

Fig. 1102 — Top view of the chassis of the one-tube regenerative receiver. The grid condenser and grid leak are supported by their wire leads between the stator plates of the tuning condenser and the grid cap on the tube.

The construction of the receiver is shown in the photographs. The three variable condensers are mounted on the panel three inches from the bottom edge, with C_3 in the center, C_1 at the right and C_2 at the left. The condensers are 3½ inches apart, center to center. The tube socket is directly behind C_3, its center being 2¼ inches from the panel; the coil socket is 2½ inches to the right. The a.f. transformer is mounted at the rear of the chassis, as shown. All ground connections may be made directly to the chassis, making sure that the paint is scraped away and that good contact is secured.

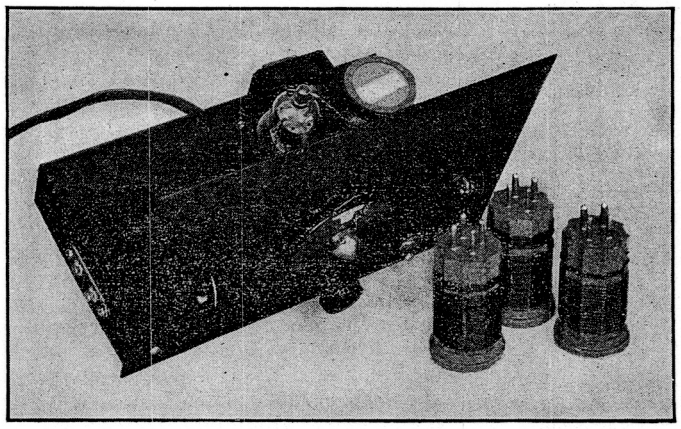

Fig. 1101 — A one-tube regenerative receiver, using a double triode with one section a regenerative detector and the other an audio amplifier. The chassis measures 5½ × 9½ × 1½ inches; panel size is 6 × 10½ inches.

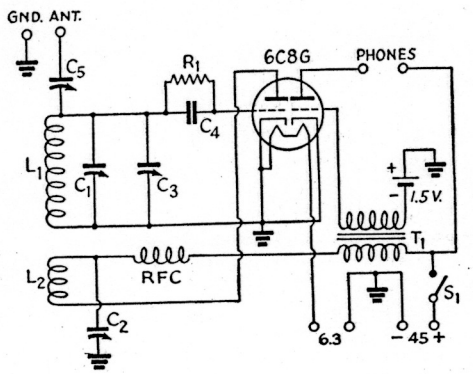

Fig. 1103 — Circuit diagram of the one-tube receiver.
C_1, C_2 — 100-$\mu\mu$fd. variable (Hammarlund SM-100).
C_3 — 15-$\mu\mu$fd. variable (Hammarlund SM-15).
C_4 — 100-$\mu\mu$fd. mica.
C_5 — 3–30-$\mu\mu$fd. mica trimmer (National M-30).
R_1 — 1 megohm, ½-watt.
L_1, L_2 — See coil table.
T_1 — Audio transformer, interstage type, 3:1 ratio (Thordarson T-13A34).
S_1 — S.p.s.t. toggle switch.
RFC — 2.5-mh. r.f. choke.

In the photograph, Fig. 1105, the antenna connection strip is at the left, with C_5 supported by the wiring to the antenna post. The ground connection is soldered to a lug under the nut holding the connection strip in place. The choke, *RFC*, also is supported by the wiring. The bias battery (the zinc can is the negative terminal) is soldered to a lug strip, as shown. The headphone connections are made by means of tip jacks mounted on the rear edge of the chassis. Filament and plate power are brought in through a four-wire cable which enters the chassis through the rear edge.

The coils are made as shown in Fig. 1104 and the coil table. Both windings should be in the same direction. Using the standard pin numbering for four-prong sockets, pin 1 connects to ground, pin 2 to the plate of the detector, pin 3 to *RFC* and the stator plates of C_2, and pin 4 to the stator plates of C_1 and C_3. L_1 for the B, C and D coils should have its turns evenly spaced to occupy the specified length; the wire may be held in place when the coil is finished by running Duco cement along the ridges of the coil forms.

The heater supply for the receiver may be either a 6.3-volt filament transformer (the 1-ampere size will be ample) or a 6-volt battery. A 45-volt "B" battery should be used for the plate supply.

After the set is completed and the wiring checked to make sure that it is exactly as shown, insert the C coil in the coil socket and connect the headphones, antenna and ground, and the heater supply. After the heater supply has been connected for a few minutes, the tube should feel warm to the touch and there should be a visible glow from the heater. The "B" battery may now be connected and the switch, S_1, closed.

Now turn the regeneration condenser, C_2, starting from minimum capacity (plates all out) until the set goes into oscillation. This phenomenon is easily recognizable by a distinct click, thud or hissing sound. The point where oscillation just begins is the most sensitive operating point at that particular dial setting.

The tuning dial may now be slowly turned, the regeneration control knob being varied simultaneously (if necessary) to keep the set just oscillating. A number of stations should be heard. A little practice will make tuning easy.

If the set refuses to oscillate, the sensitivity will be poor and no code signals will be heard on the frequencies at which such signals should be expected. It should oscillate easily, however, if the coils are made exactly as shown. It sometimes happens that the antenna takes so much energy from the set that it cannot oscillate, this usually resulting in "holes" in the range where no signals can be picked up (and where the hissing sound cannot be obtained). This can

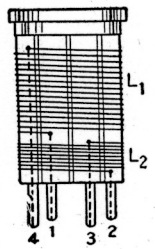

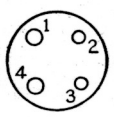

BOTTOM OF SOCKET OR COIL FORM

Fig. 1104 — Method of winding the plug-in coils for the one-tube regenerative receiver.

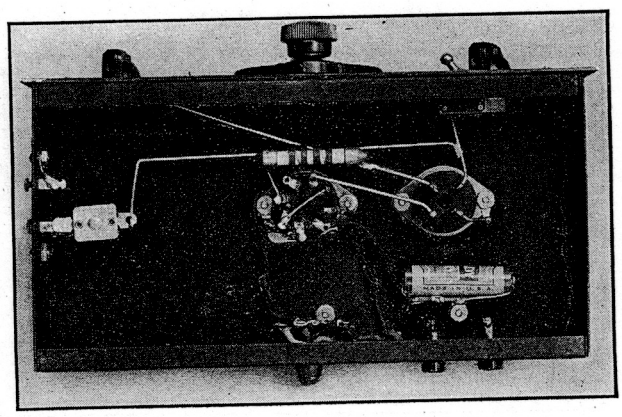

Fig. 1105 — Bottom-of-chassis view of the one-tube two-stage regenerative receiver. Construction and wiring are extremely simple.

ONE-TUBE REGENERATIVE RECEIVER COIL DATA

Coil	*Grid Winding (L_1)*	*Tickler (L_2)*
A	56 turns No. 22 enameled	15 turns No. 24 enameled
B	32 " " " "	8 " " " "
C	18 " " " "	5 " " " "
D	10 " " " "	5 " " " "

All coils wound on 1½-inch diameter forms (Hammarlund SWF-4). Grid windings on coils B, C and D spaced to occupy a length of 1½ inches; grid winding on coil A close-wound. Tickler coils all close-wound, spaced ⅛ inch from bottom of grid winding. See Fig. 1104.

Frequency range: Coil A — 1700 to 3200 kc.
B — 3000 to 5700 kc.
C — 5400 to 10,000 kc.
D — 9500 to 18,000 kc.

be cured by reducing the capacity of C_5 (unscrewing the adjusting screw) until the detector again oscillates. If it still refuses to oscillate, the coil L_2 must be moved nearer to L_1 or, in extreme cases, a turn or two must be added to L_2. This is best done by rewinding with more turns rather than by trying to add a turn or two to the already-wound coil. For any given band of frequencies, adjust C_5 so that the detector oscillates over the whole range, using as much capacity at C_5 as is possible. This will give the best compromise between dead spots and signal strength. It will be found that less advancing of the regeneration control, C_2, is required at the high-frequency end of a coil range (C_1 at or near minimum capacity) than at the low-frequency end. The best adjustment of the antenna condenser, C_5, and the feed-back coil, L_2, is that which requires almost a maximum setting of the regeneration control at the low-frequency end (maximum capacity of C_1) of any coil range.

Coil A misses the high-frequency end of the broadcast band, but it is possible to hear police stations and the 160-meter amateur band with it, as well as other services. The amateur band is most easily located by listening at night, setting C_3 at maximum and slowly tuning with C_1 until some of the police stations are heard. These stations operate on 1712 kc., so that once found they become "markers" for the low-frequency end of the band.

Locating the amateur bands on the other coils is done in much the same manner, by searching carefully with C_1. The 3.5–4.0-Mc. amateur band will be found on coil B at about 80 per cent setting of C_1. On coil C, the 7-Mc. amateur band will be found with C_1 meshed about 60 per cent; the 14-Mc. band (coil D) is found with C_1 meshed about 20 per cent.

A suitable antenna for the receiver would be 50 to 75 feet long, and as high and clear of surrounding objects as possible. The ground lead should preferably be short; a connection to a heating radiator or water pipe is usually good.

A Two-Tube Superheterodyne Receiver

Although all the advantages of the superheterodyne-type receiver cannot be secured without going to rather elaborate multi-tube circuits, it is possible to use the superhet principle to overcome most of the disadvantages of the simple regenerative receiver. These are chiefly the necessity for critical adjustment of the regeneration control with tuning, antenna "dead spots," lack of stability (both in the detector circuit itself and because of slight changes in frequency when the antenna swings with the wind), and blocking, or the tendency for strong signals to pull the detector into zero beat. These effects can be largely eliminated by making the regenerative detector operate on a fixed low frequency and designing it for maximum stability. The incoming signal is then converted to the fixed detector frequency before being detected.

A two-tube receiver operating on this principle is shown in Figs. 1106 to 1110. It employs the same chassis and panel, as well as most of the parts, of the one-tube regenerative receiver just described, with the addition of a converter tube and its associated circuits. The same coils may also be used, with a new winding and rearrangement of the pin connections for L_2; the windings and connections for L_1 need not be changed. One additional coil is needed to cover a frequency range of 1700 to 14,500 kc., including the four lower-frequency amateur bands.

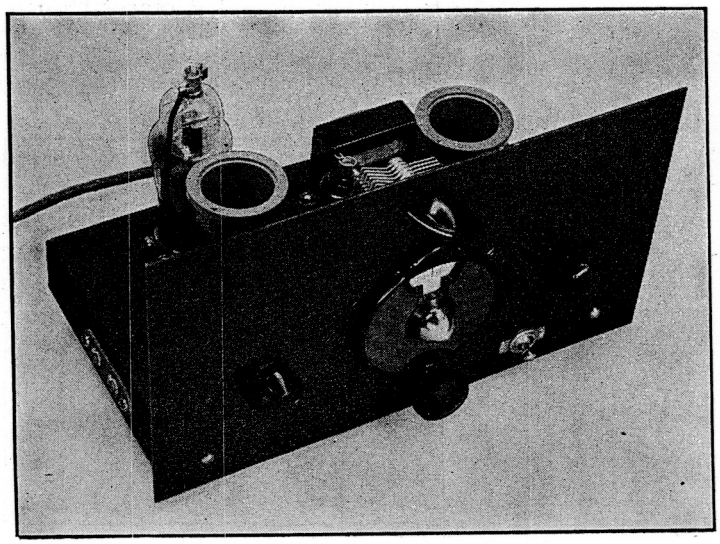

Fig. 1106 — This two-tube superheterodyne has one more operating control than the ordinary regenerative receiver, but it is more stable and easier to tune.

The circuit diagram is given in Fig. 1108. A 6K8 is used to convert the frequency of the incoming signal to the fixed or intermediate frequency, and the two triode sections of a 6C8G serve as the regenerative detector and audio amplifier respectively. L_1C_1 is the r.f. circuit, tuned to the signal, and L_2 is the antenna coupling coil. C_7 is a by-pass condenser across the 1.5-volt battery used to bias the signal grid of the 6K8. The high-frequency oscillator tank circuit is $L_3C_3C_4$, with C_3 for band-setting and C_4 for bandspread.

The i.f. tuned circuit (or regenerative detector circuit) is L_5C_5. This must be a high-C circuit if stability better than that of an ordinary regenerative detector is to be secured. The frequency to which it is tuned should be in the vicinity of 1600 kc.; the exact frequency does not matter so long as it falls on the low-frequency side of the 1750-kc. band. L_5 and its tickler coil, L_6, are wound on a small form, and L_5 is tuned by a fixed mica condenser of the low-drift type. Since these condensers are rated with a capacity tolerance of 5 per cent, it is sufficient to wind L_5 as specified under Fig. 1108. The resulting resonant frequency will be in the correct region. No manual tuning is necessary, and therefore the frequency of this circuit need not be adjusted. C_2 is the regeneration-control condenser, isolated from the d.c. supply by the choke, *RFC*. Only enough turns need be used on L_6 to make the detector oscillate readily when C_2 is at half capacity or more.

The second section of the 6C8G is transformer-coupled to the detector. The grid is biased by the same battery which furnishes bias for the 6K8.

Looking at the top of the chassis from in front, the r.f. or input circuit is at the left, with C_1 on the panel and L_1L_2 just behind it. The 6C8G is directly to the rear of the coil. The 6K8 converter tube is centered on the chassis, with C_3 and C_4 on the panel directly in front of it. C_4 is driven by the vernier dial and C_3 is toward the top of the panel. The coil at the right is L_3L_4, in the oscillator tuned circuit. The regeneration-control condenser, C_2, is at the right on the panel. The audio transformer, T_1, is behind the oscillator coil.

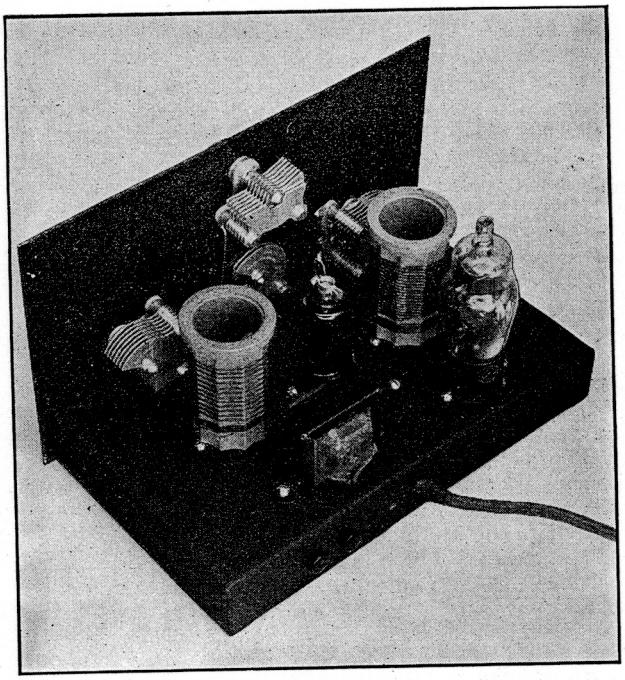

Fig. 1107 — A back-of-panel view of the two-tube superhet, showing the arrangement of parts on top of the 5½ × 9½ × 1½-inch chassis.

Looking at the bottom of the chassis, the antenna-ground terminals are at the left, with a lead going directly to L_2 on the coil socket. The bias battery is fastened to a two-lug insulating strip by means of wires soldered to the battery. The zinc can is the negative end and the small cap the positive terminal. By-pass condenser C_7 is mounted on the coil socket.

The i.f. coil is mounted on the chassis midway between the socket for the 6C8G and that for the 6K8. In winding the coil the ends of the wires are left long enough to reach to the various tie-in points. The grid condenser, C_9, is

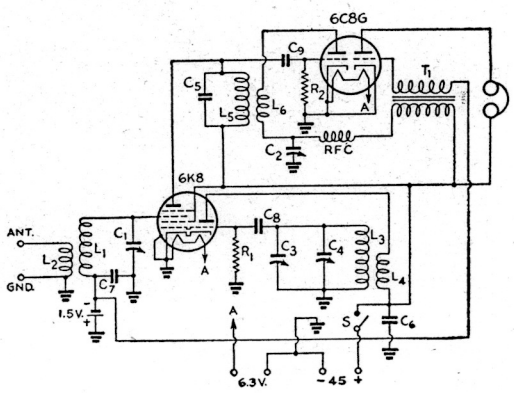

Fig. 1108 — Circuit diagram of the two-tube superheterodyne.
C_1, C_2, C_3 — 100-$\mu\mu$fd. variable (Hammarlund SM-100).
C_4 — 15-$\mu\mu$fd. variable (Hammarlund SM-15).
C_5 — 250-$\mu\mu$fd. silvered mica (Dubilier Type 5-R).
C_6 — 0.01-μfd. paper
C_7 — 0.005-μfd. mica.
C_8, C_9 — 100-$\mu\mu$fd. mica.
R_1 — 50,000 ohms, ½-watt.
R_2 — 1 megohm, ½-watt.
RFC — 2.5-mh. r.f. choke.
T_1 — Audio transformer, interstage type, 3:1 ratio (Thordarson T-13A34).
L_1–L_4, inc. — See coil table.
L_5 — 55 turns No. 30 d.s.c., close-wound on ¾-inch diameter form (National PRF-2); inductance 40 microhenrys.
L_6 — 18 turns No. 30 d.s.c., close-wound, on same form as L_5; see Fig. 1110.
S — S.p.s.t. toggle switch.

supported by the grid terminal on the tube socket and the end of the grid winding, L_5. R_2 is mounted over the 6C8G socket. The i.f. tuning condenser, C_5, is mounted by its terminals between the plate and screen prongs on the 6K8 socket, the ends of L_5 being brought to the same two points.

The oscillator grid condenser, C_8, is connected between the coil-socket prong and the oscillator grid prong on the 6K8 socket. By-pass condenser C_6 is mounted alongside the oscillator coil socket, as shown. The connections to the rotors of the tuning condensers for both coils go through holes in the chassis near the front edge. Grounds are made directly to the chassis in all cases; make sure that there is an actual connection to the metal.

The "B" switch is a single-pole single-throw toggle. 'Phone-tip jacks on the rear chassis edge provide means for connecting the audio output to the headphones.

The method of winding coils is indicated in Fig. 1110; if the connections to the circuit are made as shown, there will be no trouble in obtaining the necessary oscillation. Both coils on each form should be wound in the same direction.

To test the receiver, first try out the i.f. circuit. Connect the filament and "B" supply and place both tubes in their sockets. Put a high-frequency coil in the r.f. socket, but do not insert a coil in the oscillator socket. The only test which need be made is to see if the detector oscillates properly. Advance C_2 from minimum capacity until the detector goes into oscillation, which will be indicated by a soft hiss. This should occur at around half scale on the condenser. If it does not occur, check the coil (L_5L_6) connections and winding direction and, if these seem right, add a few turns to the tickler, L_6. If the detector oscillates with very low capacity at C_2, it will be advisable to take a few turns off L_6 until oscillation starts at about midscale.

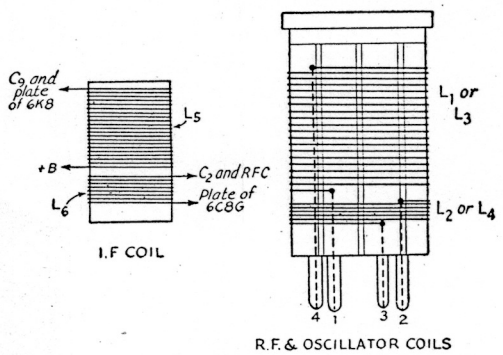

Fig. 1110 — How the coils for the two-tube superheterodyne are wound. The bottom end of the i.f. coil in this drawing is the end mounted adjacent to the chassis. L_5 and L_6 are wound in the same direction. On the r.f. socket, pin 4 connects to the No. 3 grid (top cap) of the 6K8 and stator of C_1, pin 1 to C_7, pin 2 to ground and pin 3 to the antenna post. On the oscillator socket, pin 4 goes to C_8 and the stators of C_3 and C_4, pin 1 to ground, pin 2 to "B" + and pin 3 to the 6K8 oscillator plate. Both windings are in the same direction on each coil.

After the i.f. has been checked, plug in an oscillator coil for a range on which signals are likely to be heard at the time. The 5400–10,000-kc. range is usually a good one. The coils are arranged so that a minimum number is needed, even though two are used at a time. With coil C in the r.f. socket and D in the oscillator circuit, set C_1 at about half scale and turn C_3 slowly around midscale until a signal is heard. Then tune C_1 for maximum volume. Should no signals be heard, the probability is that the oscillator section of the 6K8 is not working, in which case the same method of testing is used as described above for the i.f. detector — check wiring, direction of windings of coils, and, finally, add turns to the tickler, L_4, if necessary.

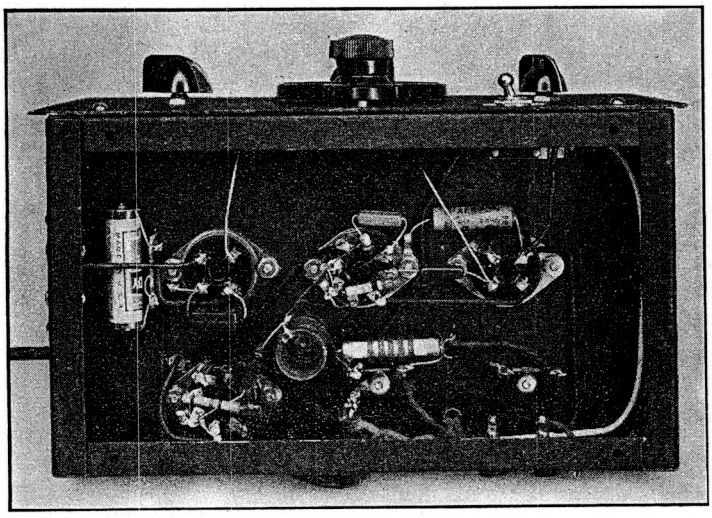

Fig. 1109 — Below-chassis view of the two-tube superhet. The i.f. circuit is underneath the chassis; no adjustment of its frequency is necessary. Since few parts are required, the construction, assembly and wiring are quite simple.

The same oscillator coil, D, is used for two frequency ranges. This is possible because the oscillator frequency is placed on the low-frequency side of the signal on the higher range. This gives somewhat greater stability at the highest-frequency range. Some pulling — a change in beat-note as the r.f. tuning is varied by means of C_1 — will be observed on the highest-frequency range, but it is not serious in the region of resonance with the incoming signal frequency.

The receiver will respond to signals either 1600 kc. lower or 1600 kc. higher than the oscillator frequency. The unwanted response, or

image, is discriminated against by the selectivity of the r.f. circuit. On the three lower-frequency ranges, when it is possible to find two tuning spots on C_1 at which incoming random noise peaks up, the lower-frequency peak (the one requiring the highest tuning capacity at C_1) is the right one. The oscillator frequency is 1600 kc. higher than that of the incoming signal on these three ranges. On the fourth range the oscillator is tuned 1600 kc. lower. Bandspread is not needed in the r.f. circuit, since the tuning is not very critical.

The regeneration control may be set to give desired sensitivity and left alone while tuning; only when an exceptionally strong signal is encountered is it necessary to advance it more to keep the detector in oscillation for code reception. It should be set just on the edge of oscillation for 'phone reception.

The heater requirements of the set are 0.6 amperes at 6.3 volts, approximately. Either a.c. or d.c. may be used. The "B" battery current is between 4 and 5 ma., so that a standard 45-volt block will last hundreds of hours (*Bib. 1*).

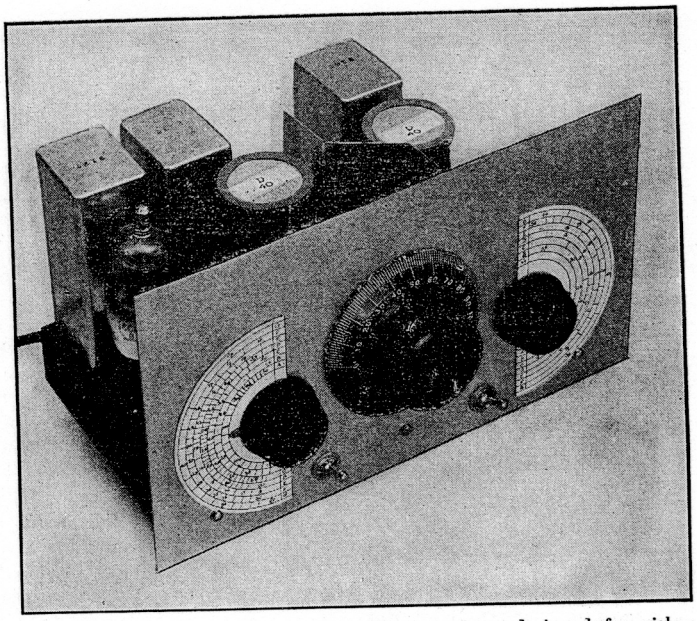

Fig. 1111 — A three-tube superheterodyne receiver, designed for either a.c. or d.c. heater operation and for 90-volt "B" battery plate supply.

A Three-Tube General Coverage and Bandspread Superheterodyne

A superhet receiver of simple construction, having a wide frequency range for general listening-in as well as full bandspread for amateur-band reception, is shown in Figs. 1111 to 1115. The circuit uses only three tubes and gives continuous frequency coverage from about 75 kc. (4000 meters) to 60 Mc. (5 meters). The receiver is intended for operation from either a 6.3-volt transformer or 6-volt storage battery for filament supply, and a 90-volt "B" battery for plate supply.

TWO-TUBE SUPERHET COIL DATA

Coil Grid Winding (L_1 and L_3) Antenna (L_2) or Tickler (L_4)

A	56 turns No. 22 enameled	10 turns No. 24 enameled
B	32 " " " "	8 " " " "
C	18 " " " "	7 " " " "
D	12 " " " "	7 " " " "
E	10 " " " "	7 " " " "

All coils wound on 1½-inch diameter forms (Hammarlund SWF-4). Grid windings on coils B-E, inclusive, are spaced to occupy a length of 1½ inches; grid winding on coil A is close-wound. Antenna-tickler coils are all close-wound, spaced ⅛-inch from bottom of grid winding. See Fig. 1110.

Frequency Range	*Coil at L_1-L_2*	*Coil at L_3-L_4*
1700 to 3200 kc.	A	B
3000 to 5700 kc.	B	C
5400 to 10,000 kc.	C	D
9500 to 14,500 kc.	E	D

The circuit diagram is given in Fig. 1112. A 6K8 is used as a combined oscillator-mixer followed by a 6SK7 i.f. amplifier. The intermediate frequency is 1600 kc., a frequency which reduces image response on the higher frequencies and simplifies the design for low-frequency operation in the region below the broadcast band. One section of the 6C8G double triode is used as a second detector and the other section as a beat-frequency oscillator. Headphone output is taken from the plate circuit of the second detector.

To simplify construction, the antenna and oscillator circuits are separately tuned. The antenna tuning control, C_1, may be used as a volume control by detuning from resonance. The oscillator circuit, $L_3C_2C_3$, is tuned 1600 kc. higher than the signal on frequencies up to 5 Mc.; above 5 Mc. the oscillator is 1600 kc. lower than the signal. C_2 is the general coverage or band-setting condenser, C_3 the bandspread or tuning condenser. C_4 is a tracking condenser which sets the oscillator tuning range on each band so that it coincides with the tuning range in the mixer grid circuit.

The i.f. stage uses permeability-tuned transformers with silvered-mica fixed padding condensers. The second detector is cathode-biased by R_4, by-passed by C_{11} for audio frequencies.

The second 6C8G section is the beat oscillator, using a permeability-tuned transformer. The grid condenser and leak are built into the transformer. The plate is fed through the b.o. on-off switch and a dropping resistor, R_5, the latter serving both to reduce the "B" current drain and to cut down the output of the oscillator to a value suitable for good heterodyning. No special coupling is needed between the beat oscillator and the second detector.

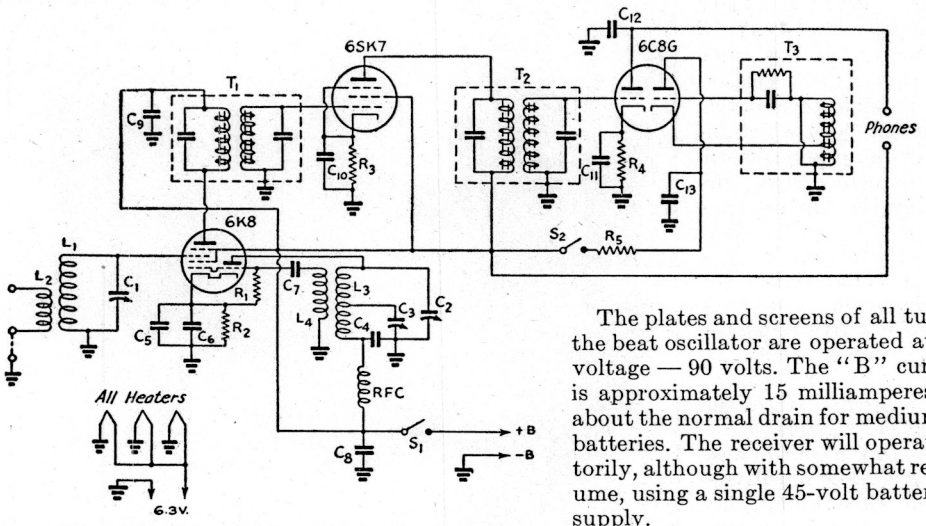

Fig. 1112 — Wiring diagram for the three-tube general coverage and bandspread superheterodyne receiver.

C_1 — 100-$\mu\mu$fd. variable (Hammarlund MC-100-M).
C_2 — 140-$\mu\mu$fd. variable (Hammarlund MC-140-M).
C_3 — 35-$\mu\mu$fd. variable (Hammarlund HF-35).
C_4 — Oscillator padder; see coil table.
C_5 — 0.1-μfd. paper.
C_6 — 0.002-μfd. mica.
C_7 — 250-$\mu\mu$fd. mica.
C_8 — 0.002-μfd. mica.
C_9, C_{10} — 0.01-μfd. paper.
C_{11} — 5-μfd. electrolytic, 50 volts.
C_{12}, C_{13} — 0.002-μfd. mica.
R_1 — 50,000 ohms, ½-watt.
R_2, R_3 — 250 ohms, ½-watt.
R_4 — 12,000 ohms, ½-watt.
R_5 — 50,000 ohms, ½-watt.
T_1, T_2 — 1600-kc. i.f. transformer (Millen 64161).
T_3 — 1600-kc. oscillator transformer (Millen 65163).
L_1, L_2, L_3, L_4 — See coil table on page 215.
S_1, S_2 — S.p.s.t. toggle switch.
RFC — 2.5-mh. r.f. choke.

The plates and screens of all tubes except the beat oscillator are operated at the same voltage — 90 volts. The "B" current drain is approximately 15 milliamperes, which is about the normal drain for medium-size "B" batteries. The receiver will operate satisfactorily, although with somewhat reduced volume, using a single 45-volt battery for "B" supply.

The parts arrangement is shown in the photographs of Figs. 1113 and 1114. The mixer tuning condenser, C_1, is at the right. The bandspread oscillator tuning condenser, C_3, is in the center, controlled by the National Type-A 3½-inch dial, and the bandset condenser, C_2, is at the left.

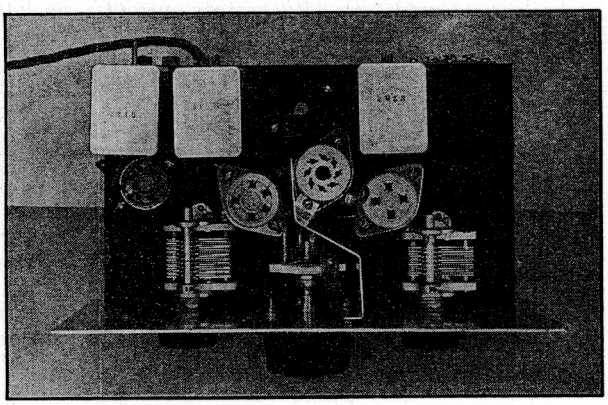

Fig. 1113 — A plan view of the three-tube superheterodyne with the coils and tubes removed. The chassis measures 5½ × 9½ × 1½ inches and the panel size is 10½ × 6 inches.

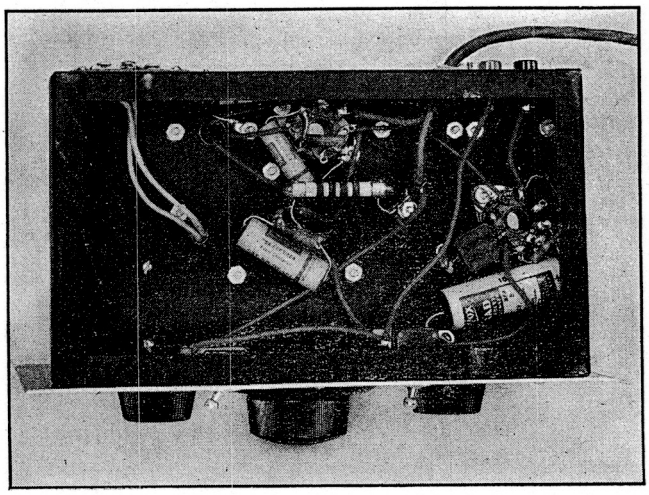

Fig. 1114 — Below the chassis of the three-tube receiver. The r.f. choke is mounted near the oscillator coil socket to keep the r.f. leads short. In the i.f. stage, care should be taken to keep the plate and grid leads from the i.f. transformer short and well separated. A four-wire cable is used for power-supply connections. The headphone tip jacks may be seen near the upper right-hand corner.

Referring to the top view, Fig. 1113, the i.f. section is along the rear edge, with T_1 at the right. Next is the socket for the 6SK7, then T_2, and finally T_3 at the extreme left. The socket for the 6C8G is just in front of T_3. The triode section in which the grid is brought out to the top cap is the one which is used for the beat oscillator.

The r.f. section has been arranged for short leads to favor high-frequency operation. The three sockets grouped closely together in the center are, from left to right, the oscillator-coil socket, socket for the 6K8, and the mixer-coil socket. All are mounted above the chassis by means of mounting pillars, so that practically all r.f. leads are above deck. The oscillator grid leak, R_1, and the high-frequency cathode by-pass condenser, C_6, should be mounted directly on the socket before it is installed. So also should the oscillator grid condenser, C_7, which can be seen extending to the left toward the oscillator-coil socket in Fig. 1113. Power-supply connections should be soldered to the 6K8 socket prongs before the socket is mounted, and these leads brought down through a hole in the chassis.

C_1 and C_2 are mounted directly on the chassis. C_3 is held from the panel by means of a small bracket made from metal strip, bent so that the condenser shaft lines up with the dial coupling. A baffle shield made of aluminum separates the oscillator and mixer sections; this shield is essential to prevent coupling between the two circuits which might otherwise cause interaction and poor performance.

The first step in putting the receiver into operation is to align the i.f. amplifier. This should preferably be done with the aid of a test oscillator, but if one is not available the circuits may be aligned on hiss or noise. The beat oscillator can also be used to furnish a signal for alignment. Further information on alignment may be found in Chapter Seven.

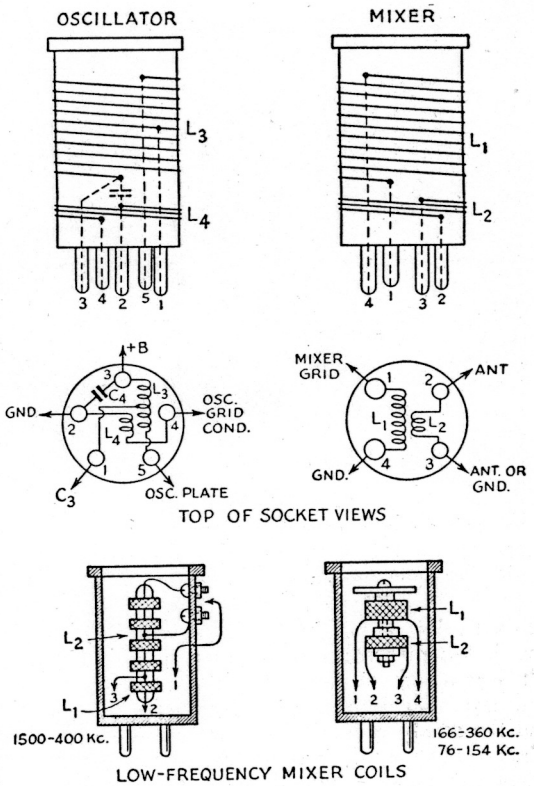

Fig. 1115 — How the coils for the three-tube superheterodyne are constructed. On the hand-wound oscillator and mixer coils, all windings are in the same direction.

The coils are wound as shown in Fig. 1115. A complete set of specifications is given in the coil table. Ordinary windings are used for all oscillator coils, and for all mixer coils for frequencies above 1600 kc. Below 1600 kc., readily-available r.f. chokes are used for the tuned circuits. For the broadcast band and the 600–750 meter ship-to-shore channels, the

COIL DATA FOR THE THREE-TUBE SUPERHETERODYNE

Range	Turns					C_4
	L_1	L_2	L_3	L_4	L_3 Tap	
A — 76–154 kc.	30 mh.	1 mh.	65	12	Top	300 μμfd.
166–360 kc.	8 mh.	1 mh.				
400–1500 kc.	2.5 mh.*	*				
B — 1.6 to 3.2 Mc. (160 meters)	56	10	42	11	Top	75 μμfd.
C — 3.00 to 5.7 Mc. (80 meters)	32	8	27	9	Top	100 μμfd.
D — 5.4 to 10.0 Mc. (40 meters)	18	8	22	9	12	0.002 μfd.
E — 9.5 to 18 Mc. (20 meters)	10	8	12	3½	6	400 μμfd.
F — 15.0 to 30 Mc. (10 meters)	6	4	6	2½	2½	400 μμfd.
G — 30 to 60 Mc. (5 meters)	3	3	3½	1	1	300 μμfd.

* See Fig. 1115 and text for details. C_4 is mounted inside oscillator coil form; see Fig. 1115. Bandspread taps on L_3 measured from bottom ("B" + end) of coil. L_3-A and L_1-B coils close-wound with No. 22 enameled wire; L_3-B close-wound with No. 20 enameled; all other grid coils (L_1 and L_3) wound with No. 18 enameled, spaced to give a length of 1½ inches on a 1½-inch diameter form (Hammarlund SWF) except the G coils, which are spaced to a length of 1 inch on 1-inch diameter forms (Millen 45004 and 45005). Antenna and plate coils, L_2 and L_4, are close-wound with No. 24 enameled, spaced about ⅛th-inch from bottoms of grid coils, except for L_4-G, which is interwound with L_3.

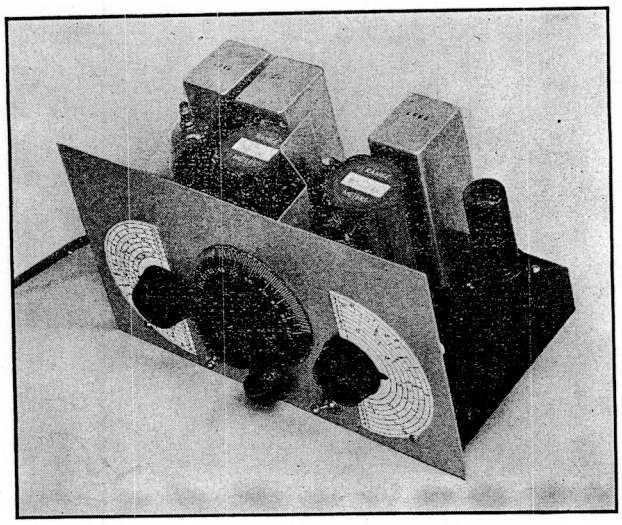

Fig. 1116 — The modified three-tube superheterodyne receiver with the audio amplifier stage added for loudspeaker operation.

mixer coil is a Hammarlund 2.5-mh. r.f. choke, with the pies tapped as shown in Fig. 1115. The grid end and the intermediate tap are connected to machine screws mounted near the top of the coil form, and a flexible lead is brought out from the grid pin in the coil form to be fastened to either lead as desired. Mixer coils for the two lowest-frequency ranges are constructed as shown. The antenna winding in each case is a coil taken from an old 465-kc. i.f. transformer, having an inductance of about 1 millihenry. The inductance is not particularly critical, and a pie from a 2.5-mh. choke may be used instead.

With the i.f. aligned, the mixer grid and oscillator coils for a band can be plugged in. C_3 should be set near minimum and C_2 tuned from minimum until a signal is heard. Then C_1 is adjusted for maximum signal strength. If C_2 is set at the high-frequency end of an amateur band, further tuning should be done with C_3, and the band should be found to cover about 75 per cent of the dial. C_3 can of course be used for bandspread tuning outside the amateur bands. It is convenient to calibrate the receiver, using homemade paper scales for the purpose as shown in Fig. 1111. Calibration points may be taken from incoming signals of known frequency, from a calibrated test oscillator, or from harmonics of a 100-kc. oscillator as described in Chapter Nineteen. The mixer calibration need only be approximate, since tuning of the mixer circuit has little effect on the oscillator frequency. It is sufficient to make a calibration which ensures that the mixer is tuned to the desired signal rather than to the image.

On the broadcast band, the tuning range is such that, with C_2 set at 1500 kc., the entire band will be covered on C_3. It is necessary, however, to change the tap on the mixer coil to make the antenna circuit cover the entire band. Only one oscillator coil is needed for the range from 75 to 1500 kc., but a series of coils is needed to cover the same range in the mixer circuit.

Adding an audio stage to the three-tube superhet — Very frequently the builder of a small receiver wishes it to operate a loudspeaker. The three-tube receiver just described is designed for headphone operation, but readily can be converted to a four-tube set for use with a speaker. For this purpose a 6F6 pentode can be added to the circuit diagram, as shown in Fig. 1118. Figs. 1116 and 1119 show how the receiver looks when completed.

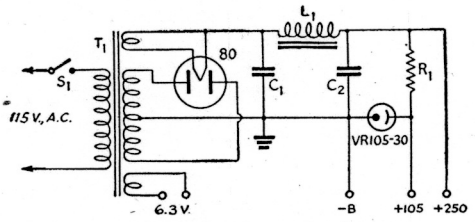

Fig. 1117 — Power-supply circuit for the three-tube super.
C_1 — 8-μfd. electrolytic, 450 volts.
C_2 — 16-μfd. electrolytic, 450 volts.
R_1 — 5000 ohms, 10-watt.
L_1 — 10 henrys, 65 ma.
T_1 — 275 to 300 volts each side center tap, 60–70 ma.; 6.3 volts at 1 ampere or more; 5-volt 2-ampere rectifier filament winding.
S_1 — S.p.s.t. toggle switch.
A dual-unit electrolytic condenser may be used. Output voltage will be approximately 250 at full receiver load.

For the purpose of driving the audio stage, resistance coupling is used from the plate of the second detector to the grid of the 6F6. A volume control is used for the grid resistor of the 6F6, and a jack is installed in the second-detector plate circuit so that a headphone plug may

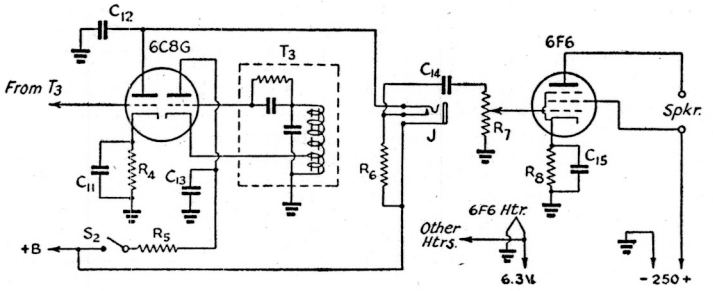

Fig. 1118 — Circuit diagram of the pentode audio amplifier stage for loudspeaker operation of the three-tube superheterodyne. Except as noted below, values for components correspond to those bearing the same numbers in Fig. 1112.
C_{14} — 0.1-μfd. paper.
C_{15} — 25-μfd. electrolytic, 50 volt.
R_6 — 120,000 ohms, ½-watt.
R_7 — 500,000-ohm volume control.
R_8 — 400 ohms, 1-watt.
J — Closed-circuit jack.

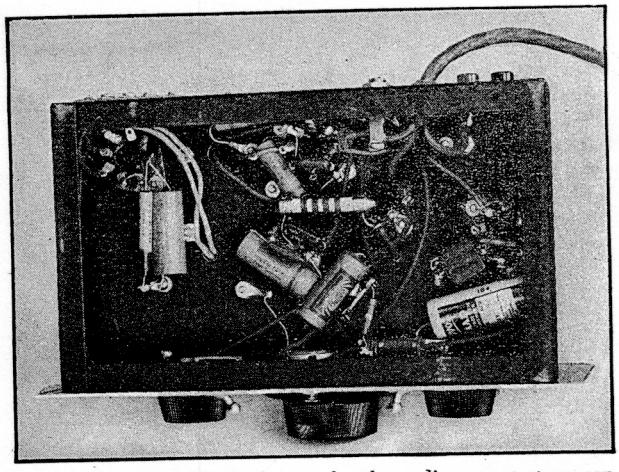

Fig. 1119 — The additional parts for the audio output stage can be identified in this sub-chassis view of the three-tube receiver.

be inserted. The volume control, R_7, should be of the midget type so that it will fit in the chassis; it is installed with its shaft projecting under the tuning dial. In the bottom view, Fig. 1119, the 6F6 socket is in the upper left corner, along with the cathode resistor and by-pass condenser, R_8 and C_{15}. The coupling condenser, C_{14}, and the plate resistor, R_6, are mounted on an insulated lug strip near the volume control.

The 6F6 will require a plate supply of 250 volts at about 40 milliamperes. This may be taken from a regular power pack, and a five-wire connection cable is used to provide an extra lead for the purpose. The first three tubes may be operated from a "B" battery, as before. Alternatively, the power supply may be constructed with a tap giving 90 or 100 volts for these tubes, the tap being connected to the proper wire in the connection cable. For best performance, the output voltage should be regulated by a VR105-30 regulator tube. A suitable power-supply circuit is shown in Fig. 1117.

The primary winding of the speaker output transformer always should be connected in the plate circuit of the 6F6. Operation without the plate circuit closed is likely to damage the screen-grid. Any speaker having a transformer with a primary impedance of 7000 ohms will be satisfactory; a permanent-magnet dynamic is convenient, since no field supply is necessary.

¶ A Regenerative Single-Signal Receiver

An inexpensive amateur-band receiver using i.f. regeneration for single-signal reception is shown in Fig. 1120. Fig. 1121 gives the circuit diagram. Regeneration also is used in the mixer circuit to improve the signal-to-image ratio and to give added gain. This receiver is designed to give the maximum of performance, in the hands of a capable operator, at minimum cost; selectivity, stability and sensitivity are the primary considerations.

The mixer, a 6SA7, is coupled to the antenna and is separately excited by a 6J5 oscillator. There is a single 460-kc. i.f. stage, using a 6SK7 and permeability-tuned transformers. The second detector and first audio amplifier is a 6SQ7, and the audio output tube for loudspeaker operation is a 6F6. The separate beat-oscillator circuit uses a 6C5. A VR105-30 voltage-regulator tube is used to stabilize the plate voltage on the oscillators and the screen voltage on the mixer and i.f. tubes.

To make construction easy and to avoid the necessity for additional trimmer condensers on each coil, the mixer and high-frequency oscillator circuits are separately tuned. Main tuning is by the oscillator bandspread condenser, C_3, which is operated by the calibrated dial. C_2 is the oscillator band-setting condenser. The mixer circuit is tuned by C_1. Regeneration in this circuit is controlled by R_{15}, connected across the mixer tickler coil, L_3.

R_{16} is the i.f.-amplifier gain control, which also serves as an i.f. regeneration control when this stage is made regenerative. C_{15} is the regeneration condenser; it is adjusted to feed back a small amount of i.f. energy from the plate to the grid of the 6SK7, and thus produce regeneration. If the high selectivity afforded by i.f. regeneration is not wanted, C_{15} may be omitted.

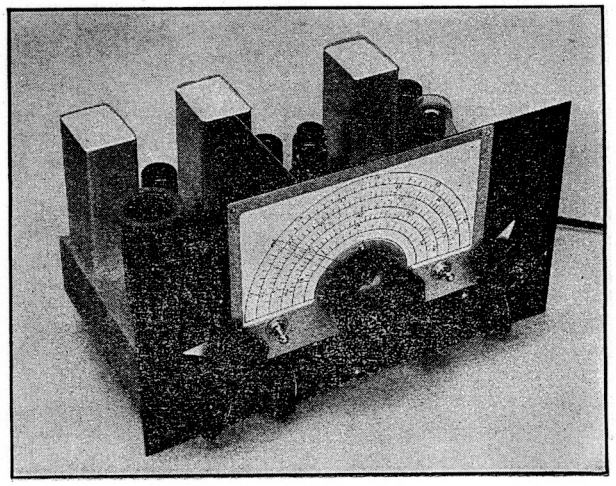

Fig. 1120 — A 7-tube superheterodyne using regeneration in the i.f. amplifier to give single-signal reception and improved image ratio. The dial (National ACN) may be directly calibrated for each amateur band. The chassis is 11 × 7 × 2 inches and the panel 7 × 12 inches. The controls along the bottom edge of the panel are, from left to right, the mixer regeneration control, R_{15}, the i.f. gain control, R_{16}, the audio volume control, R_{17}, and the beat-oscillator vernier condenser, C_{21}. The latter has the corner of one rotary plate bent over so that when the condenser plates are fully meshed the tuned circuit is short-circuited, thus stopping the b.f.o. oscillation.

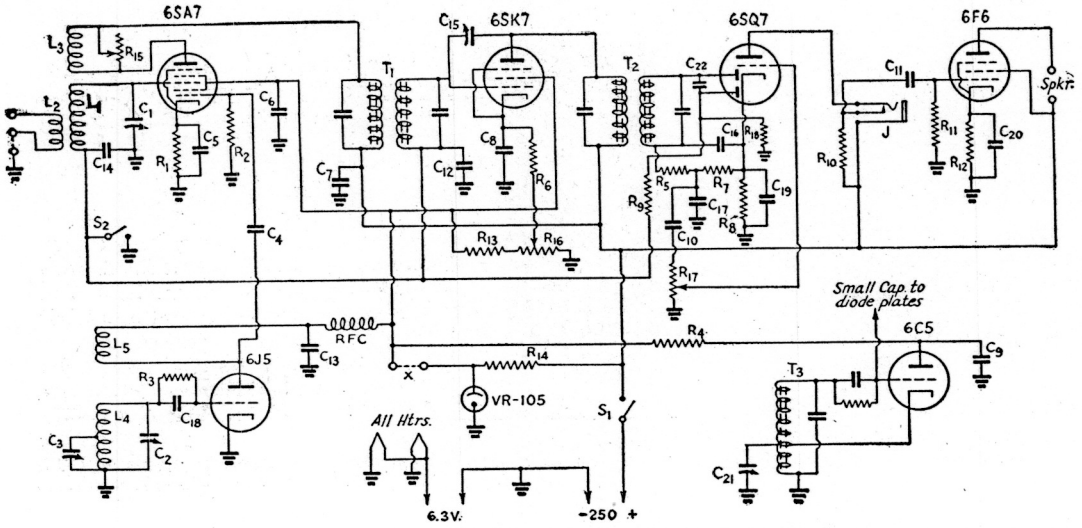

Fig. 1121 — Circuit diagram of the single-signal superhetrodyne receiver with regenerative i.f. and mixer stages.

C_1, C_2 — 50-$\mu\mu$fd. variable (Hammarlund MC-50-S).
C_3 — 35-$\mu\mu$fd. variable (National UM-35).
C_4 — 50-$\mu\mu$fd. mica.
C_5, C_6, C_7, C_8 — 0.1-μfd. paper, 600 volts.
C_9, C_{10}, C_{11}, C_{12} — 0.01-μfd. paper, 600 volts.
C_{13}, C_{14} — 0.005-μfd. mica.
C_{15} — 3-30-$\mu\mu$fd. trimmer (National M-30); see text.
C_{16} — 250-$\mu\mu$fd. mica.
C_{17}, C_{18}, C_{22} — 100-$\mu\mu$fd. mica.
C_{19}, C_{20} — 25-μfd. electrolytic, 50 volts.
C_{21} — 25-$\mu\mu$fd. variable (Hammarlund SM-25).
R_1 — 200 ohms, ½-watt.
R_2 — 20,000 ohms, ½-watt.
R_3, R_4, R_5 — 50,000 ohms, ½-watt.
R_6 — 300 ohms, ½-watt.
R_7 — 0.2 megohm, ½-watt.
R_8 — 2000 ohms, ½-watt.
R_9 — 1 megohm, ½-watt.
R_{10} — 0.1 megohm, ½-watt.
R_{11} — 0.5 megohm, ½-watt.
R_{12} — 450 ohms, 1-watt.
R_{13} — 75,000 ohms, 1-watt.
R_{14} — 5000 ohms, 10-watts.
R_{15} — 10,000-ohm volume control.
R_{16} — 25,000-ohm volume control.
R_{17} — 2-megohm volume control.
R_{18} — 2 megohms, ½-watt.
T_1 — 460-kc. permeability-tuned i.f. transformer, interstage type (Millen 64456).
T_2 — 460-kc. permeability-tuned i.f. transformer, diode type (Millen 64454).
T_3 — 460-kc. beat-oscillator transformer (Millen 65456).
RFC — 2.5-mh. r.f. choke.
J — Closed-circuit jack.
S_1, S_2 — S.p.s.t. toggle.
L_1–L_5, inc. — See coil table.
X indicates the jumper inside the VR105-30 tube base.

Diode rectification is used in the second-detector circuit. One of the two diode plates in the 6SQ7 is used for developing a.v.c. voltage, being coupled through C_{22} to the detector diode. The detector load resistor consists of R_5 and R_7 in series, the tap being used for r.f. filtering of the audio output to the triode section of the tube. R_{18} is the a.v.c. load resistor; R_9, C_{14} and C_{12} constitute the a.v.c. filter circuit. S_2 cuts the a.v.c. out of circuit by grounding the rectifier output. The headphones are connected in the plate circuit of the triode section of the 6SQ7. R_{17} is the audio volume control potentiometer.

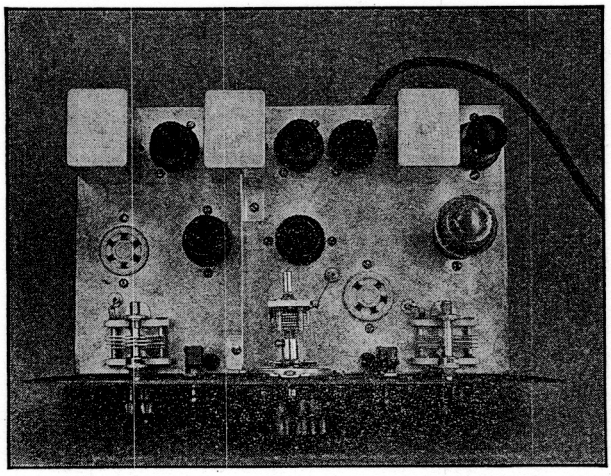

Fig. 1122 — Top view of the 7-tube superheterodyne with plug-in coils removed. Placement of the parts is discussed in the text.

The top and bottom views, Figs. 1122 and 1123, show the layout clearly. The bandspread tuning condenser, C_3, is at the front center; at the left is C_1, the mixer tuning condenser; and at the right, C_2, the oscillator band-set condenser. The oscillator tube is directly behind C_3, with the mixer tube to the left on the other side of a baffle shield which separates the two r.f. sections. This shield, measuring 4¼ × 4½ inches, is used to prevent coupling between oscillator and mixer. The mixer coil socket is at the left edge of the chassis behind C_1; the oscillator coil socket is between C_2 and C_3.

The i.f. and audio sections are along the rear edge of the chassis. The transformer in the rear left corner is T_1; next to it is the i.f. tube, then T_2. Next in line is the 6SQ7, followed by the 6C5 beat oscillator, the b.o. trans-

former, T_3, and finally the 6F6. The VR105-30 is just in front of T_3. The i.f. transformers should be mounted with their adjusting screws projecting to the rear where they are easily accessible.

The beat oscillator is coupled to the second detector by the small capacity formed by running an insulated wire from the grid of the 6C5 close to the detector diode plate prong on the 6SQ7 socket. Very little coupling is needed for satisfactory operation.

In wiring the i.f. amplifier, keep the grid and plate leads from the i.f. transformers fairly close to the chassis and well separated. Without C_{15}, the i.f. stage should be perfectly stable and should show no tendency to oscillate at full gain.

The method of winding the plug-in coils is shown in Fig. 1124, and complete specifications are given in the coil table. Ticklers (L_3) for the mixer circuit are scramble-wound to a diameter which will fit readily inside the coil form and mounted on stiff leads going directly to the proper pins in the form. The leads should be long enough to bring the coils inside the grid winding at the bottom. The amount of feedback is regulated by bending the tickler coil with respect to the grid coil. Maximum feedback is secured with the two coils coaxial, minimum when the tickler axis is at right angles to the axis of L_1. The position of L_3 should be adjusted so that the mixer goes into oscillation with R_{15} set at one-half to three-fourths of its maximum resistance.

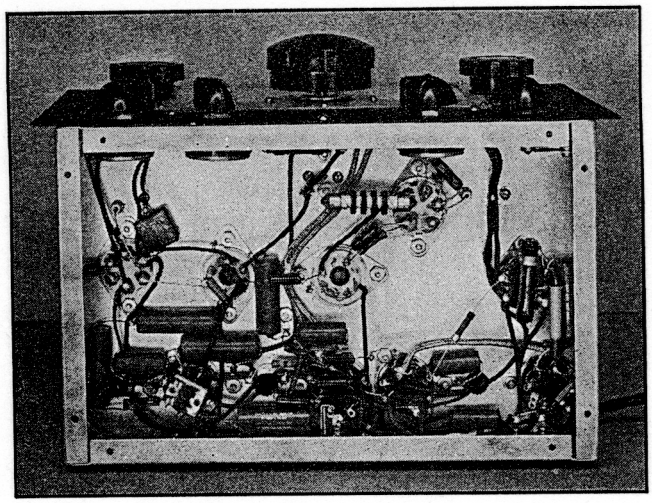

Fig. 1123 — The below-chassis wiring and location of parts is shown in this bottom view of the seven-tube regenerative single-signal receiver.

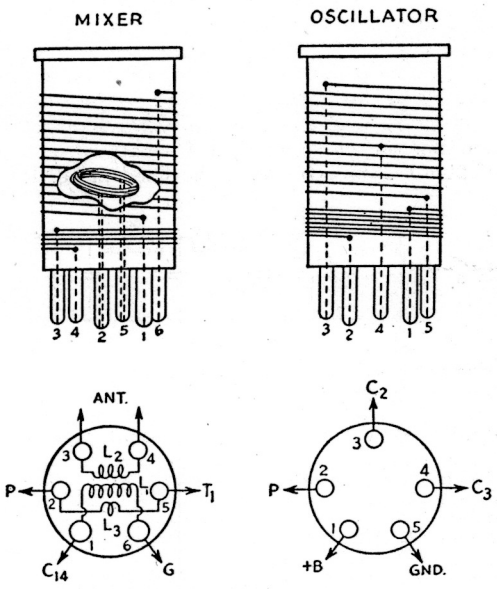

Fig. 1124 — Mixer and oscillator coil and socket connections for the seven-tube superheterodyne receiver.

The oscillator circuit has been adjusted to make the proper value of rectified grid current flow in the 6SA7 injection-grid (No. 1) circuit on each amateur band. This calls for a fairly strong value of feed-back, with the result that when the band-set condenser is set toward the high-frequency end of its range the oscillator may "squeg." This is of no consequence unless the receiver is to be used for listening outside the amateur bands, in which case it may be corrected by taking a few turns off the tickler coil, L_5. This can be done only at some sacrifice of conversion efficiency in the amateur band for which the coil was designed, however.

The i.f. amplifier can be aligned most conveniently with the aid of a modulated test oscillator. The initial alignment should be made with C_{15} disconnected so that the performance of the amplifier in a non-regenerative condition can be checked. Headphones or a loudspeaker may be used as an output indicator. The mixer and oscillator coils should be out of their sockets, and R_{15} should be set at zero resistance.

Connect the test oscillator output across C_1, which should be set at minimum capacity. Adjust the test-oscillator frequency to 460 kc. Then, using a modulated signal, adjust the trimmers on T_1 and T_2 for maximum volume. R_{16} should be set for maximum gain, and the beat oscillator should be off. As the successive circuits are brought into line, reduce the oscillator output to keep from overloading any of the amplifiers, since overloading might cause a false indication.

After the i.f. is aligned, plug in a set of coils for some band on which there is a good deal of activity. Set the oscillator padding condenser, C_2, at approximately the right capacity; with the coil specifications given, the proportion of the total capacity of C_2 in use on each band will be about as follows: 1.75 Mc., 90 per cent; 3.5

COIL DATA FOR 7-TUBE SUPERHET

Band	Coil	Wire Size	Turns	Length	Tap
1.75 Mc.	L_1	24	70	Close-wound	—
	L_2	24	15	" "	—
	L_3	22	15	——	—
	L_4	22	42	Close-wound	Top
	L_5	24	15	" "	—
3.5 Mc.	L_1	22	35	" "	—
	L_2	22	9	" "	—
	L_3	22	12	——	—
	L_4	22	25	1 inch	18
	L_5	22	10	Close-wound	—
7 Mc.	L_1	18	20	1 inch	—
	L_2	22	5	Close-wound	—
	L_3	22	9	——	—
	L_4	18	14	1 inch	6
	L_5	22	6	Close-wound	—
14 Mc.	L_1	18	10	1 inch	—
	L_2	22	5	Close-wound	—
	L_3	22	7	——	—
	L_4	18	7	1 inch	2.4
	L_5	22	4	Close-wound	—
28 Mc.	L_1	18	4	1 inch	—
	L_2	22	4	Close-wound	—
	L_3	22	1.5	——	—
	L_4	18	3.6	1 inch	1.4
	L_5	22	2.4	Close-wound	—

All coils except L_3 are 1½ inches in diameter, wound with enameled wire on Hammarlund SWF Forms. Spacing between L_1 and L_2, and between L_4 and L_5, is approximately ⅛ inch. Band-spread taps are counted from bottom (ground) end of L_4.

L_3 for 28 Mc. is interwound with L_1 at the bottom end. L_3 for all other coils is self-supporting, scramble-wound to a diameter of ¾ inch, mounted inside the coil form near the bottom of L_1.

Mc., 75 per cent; 7 Mc., 95 per cent; 14 Mc., 90 per cent; 28 Mc., 45 per cent. Set the mixer regeneration control, R_{15}, for minimum regeneration — i.e., with no resistance left in the circuit.

Now connect an antenna to the input terminals for L_2. Switch the beat oscillator on by turning C_{21} out of the maximum position, and adjust the trimmer screw on T_3 until the characteristic beat-oscillator hiss is heard.

Next tune C_1 slowly over its scale, starting from maximum capacity. Using the 7-Mc. coils as an example, when C_1 is at about half scale there should be a definite increase in the noise level as well as in the strength of the signals which may be heard. Continue on past this point toward minimum capacity until a second peak is reached on C_1; at this peak the input circuit is tuned to the frequency which represents an image in normal reception. The oscillator in the receiver is designed to work on the high-frequency side of the incoming signal, so that C_1 always should be tuned to the peak which occurs with most capacity.

After the signal peak on C_1 has been identified, tune C_3 over its whole range, following with C_1 to keep the mixer circuit in tune, to see how the band fits the dial. With C_2 properly set, the band edges should fall the same number of main dial divisions from 0 and 100; if the band runs off the low-frequency edge, less capacity is needed at C_2, while the converse is true if the band runs off the high edge. Once the band is properly centered on the dial, the panel may be marked at the appropriate point so that C_2 may be reset readily when changing bands.

To check the operation of the mixer regeneration, tune in signal on C_3, adjust C_1 for maximum volume, and slowly advance the regeneration control, R_{15}. As the resistance is increased, retune C_1 to maximum, since the regeneration control will have some effect on the mixer tuning. As regeneration is increased signals and noise both will become louder, and C_1 will tune more sharply. Finally the mixer circuit will break into oscillation and, when C_1 is right at resonance, a loud carrier will be heard, since the oscillations generated will go through the receiver in exactly the same way as an incoming signal. As stated before, oscillation should occur with R_{15} set at from one-half to three-quarters full scale. In practice, it is best always to work with the mixer somewhat below the critical regeneration point and never permit it actually to oscillate. On the lower frequencies, where images are less serious, the tuning is less critical if the mixer is made non-regenerative. In this case, always set R_{15} at zero, since there will be a range on the resistor where, without definite regeneration, the signal strength will be less than it is with zero resistance.

Should the mixer fail to oscillate, adjust the coupling by changing the position of L_3 with respect to L_1. If the two coils happen to be "poled" incorrectly, the circuit will not oscillate. This condition can be cured by rotating L_3 through 180 degrees. It is recommended that the mixer regeneration be tested first with the antenna disconnected, since antenna loading effects may give misleading results until it is known that L_3 is properly adjusted to produce oscillation.

After the preceding adjustments have been completed the i.f. regeneration may be added. Install C_{15}, taking out the adjusting screw and bending the movable plate to make an angle of about 45 degrees with the fixed plate. Re-

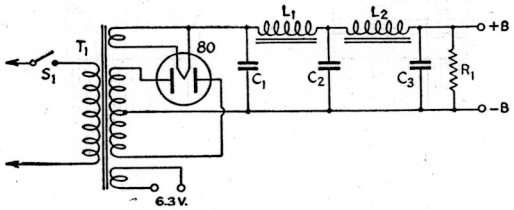

Fig. 1125 — Power-supply for the regenerative superhet.

C_1, C_2 — 8-μfd. electrolytic, 450 volts.
C_3 — 16-μfd. electrolytic, 450 volts.
R_1 — 25,000 ohms, 10-watt.
L_1, L_2 — 12 henrys, 80 ma., 400 ohms.
T_1 — 350 volts each side of center-tap, 80–90 ma.; 6.3 volts at 2.5 amperes or more; 5-volt 2-ampere rectifier filament winding.
S_1 — S.p.s.t. toggle switch.

Dual-unit electrolytic condensers may be used. This supply will give 275 to 300 volts with full receiver load.

align the i.f. As the circuits are tuned to resonance the amplifier will oscillate, and each time this happens the gain control, R_{16}, should be backed off until oscillations cease. Adjust the trimmers to give maximum output with the lowest setting of R_{16}. At peak regeneration the signal strength should be about the same with this setting, despite reduced gain in the amplifier, as it is without regeneration at full gain. Too much gain with regeneration will have an adverse effect on the selectivity.

For single-signal c.w. reception, set the beat oscillator so that, when R_{16} is advanced to make the i.f. stage just go into oscillation, the resulting tone is the desired beat-note frequency. Then back off on R_{16} to obtain the desired degree of selectivity. Maximum selectivity will be secured with the i.f. amplifier just below the oscillating point. The "other side of zero beat" will be much weaker than the desired side.

A useful feature of the band spread dial is that it can be directly calibrated in frequency for each band. These calibrations may be made with the aid of a 100-kc. oscillator, such as is described in Chapter Nineteen. Ten-kilocycle points can be plotted if a 10-kc. multivibrator is available, but, since the tuning is almost linear in each band, a fairly accurate plot will result if each 100-kc. interval is simply divided off into ten equal parts when the dial calibrations are marked.

The power-supply requirements for the receiver are 2.2 amperes at 6.3 volts for the heaters and 80 ma. at 250 volts for the plates. Without the 6F6 pentode output stage, a supply giving 6.3 volts at 1.5 amperes and 250 volts at 40 ma. would be sufficient (*Bib. 2*). The circuit of a suitable power supply is given in Fig. 1125.

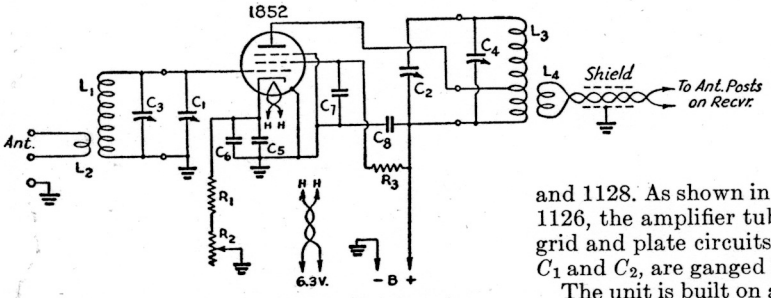

Fig. 1126 — Circuit diagram of the simple preselector.

C_1, C_3 — 15-$\mu\mu$fd. midget variable (National UM-15).
C_2, C_4 — 3–30-$\mu\mu$fd. Isolantite-insulated mica padder (National M-30).
C_5 — 0.002-μfd. mica.
C_6, C_7, C_8 — 0.01-μfd. paper, 400 volts.
R_1 — 150 ohms, ½-watt.
R_2 — 5000-ohm variable.
R_3 — 60,000 ohms, 1-watt.
L_1 — 14 Mc.: 9 turns No. 20, diameter 1½ inches, length 1 inch.
28 Mc.: 4 turns No. 20, diameter 1½ inches, length 1 inch.
L_2 — Close-wound at ground end of L_1; 3 turns for 14 Mc., 2 turns for 28 Mc.
L_3 — Same as L_1 but tapped 3 turns from ground end for 14 Mc. and 1 turn from ground for 28 Mc.
L_4 — Same as L_2, on same form as L_3.

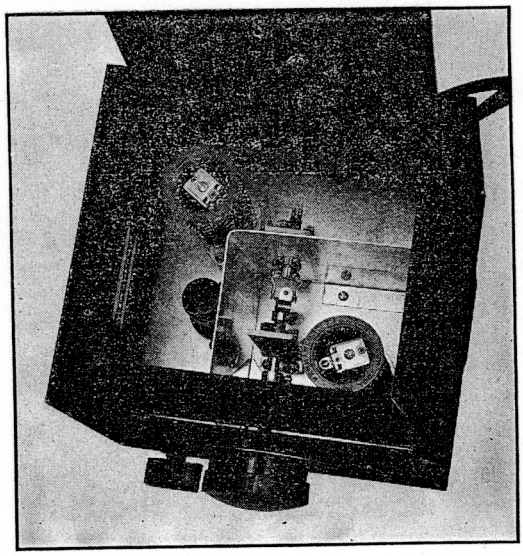

Fig. 1127 — Top view of the preselector. The padder condensers are mounted inside the plug-in coil forms.

A Regenerative Preselector

A separate preselector unit, consisting of an r.f. amplifier which may be inserted between the antenna and receiver, is an extremely useful device. Its use is especially beneficial on the 14- and 28-Mc. bands where image response becomes bothersome with superheterodyne receivers using intermediate frequencies of the order of 455 kc., since the added selectivity practically wipes out the image. Also, the gain of most receivers drops off on these two bands as compared with the gain on the lower frequencies, so that the additional amplification of the preselector is helpful in building up the weaker signals.

A simple preselector for these two bands is shown in Figs. 1127 and 1128. As shown in the circuit diagram, Fig. 1126, the amplifier tube is an 1852, with tuned grid and plate circuits. The tuning condensers, C_1 and C_2, are ganged for single-control tuning.

The unit is built on a 7 × 7 × 2-inch chassis. Fig. 1127 shows the arrangement of parts on top. The grid-circuit coil is at the left rear corner, with the 1852 directly in front of it. An L-shaped shield partition separates the grid circuit from the plate coil, L_3, which is in the right front corner. The sockets for both coils are mounted above the chassis on small metal pillars. The ganged tuning condensers are mounted in line in the center of the chassis. They are mechanically connected together, and to the shaft bearing on the front panel, by flexible couplings. The antenna binding posts and the cords for power and r.f. output come through the rear edge of the chassis. It is neces-

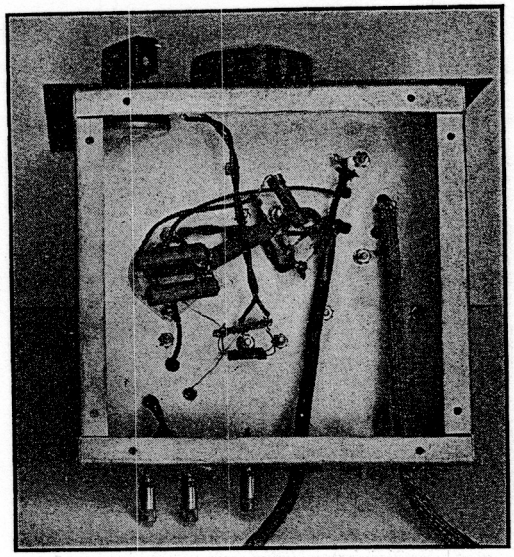

Fig. 1128 — Below-chassis view of the preselector. Note the manner of grouping the by-pass condensers about the tube socket to provide shielding between grid and plate.

sary to cut a rectangular hole in the lower part of the back of the cabinet to make the connections accessible.

The below-chassis view, Fig. 1128, shows how the condensers are grouped about the tube socket. The mica condenser, C_5, is fastened vertically across the socket as close to it as possible (allow room for the tube-centering pin to project through the socket) to provide shielding between the grid and plate prongs. The additional cathode by-pass, C_6, and the screen by-pass, C_7, also are mounted across the socket on either side of the mica condenser, thus providing additional shielding. With the exception of the ground on C_1, all r.f. ground connections are made to one lug on the side of the ring holding the tube socket to the chassis. Shielding about the output leads from L_4 is essential, to prevent unwanted feed-back and also to reduce signal pick-up on the line going to the receiver. The shield should be continued up to the antenna terminals of the receiver with which the preselector is used. The wires should be connected to the "doublet" terminals on the receiver, and the shield should be tied to the receiver ground terminal or chassis. The shield also must be grounded to the preselector chassis. This connection between the preselector and the receiver chassis is essential for good performance.

Because of the high transconductance of the 1852, very little coupling is needed between input and output circuits to cause self-oscillation when both circuits are tuned to the same frequency. The box containing the unit provides part of the shielding between the two circuits, in addition to that provided by the baffle. This simple shielding is not complete enough to prevent self-oscillation, however, so the plate of the tube is tapped down on L_3 to reduce the feed-back. The tap should be located so that the circuit goes into oscillation with the gain control, R_2, at about half scale or less. The controlled regeneration greatly increases the gain and selectivity over that obtainable without regeneration.

Initial adjustments are simple. With the receiver and preselector turned on, first tune the plate trimmer, C_4 (C_4 and C_3 are mounted inside the coil forms), for maximum noise, with R_2 near maximum (least resistance). This adjustment will be found fairly critical. The tuning condenser should be set at about half scale, and the receiver should be tuned to about the middle of the band. Then set R_2 at minimum gain (resistance all in) and adjust C_3, the grid padder, for maximum noise output. The adjustments may be made on a signal as well as on noise. Next, advance R_2 a little at a time, simultaneously swinging C_3 through resonance, until oscillations commence. Back off R_2 to the point just below oscillation and readjust C_3 and C_4 for maximum output. When the lid of the cabinet is closed after completing this adjustment the feed-back will decrease, and R_2 must be advanced more to obtain oscillation. It is not necessary to work near the critical regeneration point under normal conditions, however, so that actual tuning is not critical. The preselector must, of course, be kept in tune with the receiver as the latter is tuned over the band.

Should the circuit oscillate at all settings of R_2, the plate tap should be moved nearer the bottom of L_3. If it does not oscillate at any setting, move the tap toward the plate end until oscillation starts with R_2 set at about half scale.

The improvement in gain and in reduction of image response will depend upon the amount of regeneration used. With average-strength signals and regeneration below the critical point for easy tuning, the signal-to-image ratio will be improved by a factor of 40 to 50 on 28 Mc., and by 100 or more on 14 Mc. Used with the average receiver having one r.f. stage ahead of the mixer, this means that the over-all image ratio will be of the order of 5000 on 14 Mc. and about 400 or 500 on 28 Mc. The voltage gain will be about 100 under the same conditions. Greater selectivity and gain can be obtained by working closer to the critical regeneration point.

Power for the preselector may be taken from the receiver, since the drain is small.

Bibliography

1 — "A Two-Tube Superhet," *QST*, February, 1941.
2 — Grammer, "Modernizing the Regenerative Superhet," *QST*, November, 1940.

CHAPTER TWELVE

Transmitter Construction

In the descriptions of apparatus to follow, not only the electrical specifications but also the manufacturer's name and type number have been given for most components. This is for the convenience of the builder who may wish to make an exact copy of some piece of equipment. However, it should be understood that a component of different manufacture, but of equivalent quality and having the same electrical specifications, may be substituted in most cases.

Any unusual characteristics in tuning or operation are explained in the text describing the construction of each unit in this chapter.

For straightforward transmitter adjustments, such as the tuning and neutralizing of standard circuits, the reader should consult Chapter Four. Chapter Ten contains the information on the adjustment of antenna tuners with various types of antennas. Keying systems are treated in Chapter Six. The construction of meter shunts is covered in Chapter Nineteen, while operating data on transmitting tubes not specifically included in this chapter will be found in the vacuum-tube tables of Chapter Twenty-One.

To reduce repetition and make possible a treatment of wider scope, liberal reference will be made to other chapters in this *Handbook*.

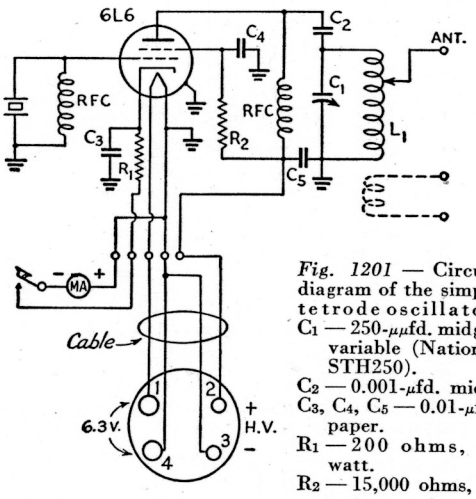

Fig. 1201 — Circuit diagram of the simple tetrode oscillator. C_1 — 250-$\mu\mu$fd. midget variable (National STH250). C_2 — 0.001-μfd. mica. C_3, C_4, C_5 — 0.01-μfd. paper. R_1 — 200 ohms, 2-watt. R_2 — 15,000 ohms, 2-watt.

RFC — 2.5-mh. r.f. choke.
L_1 — 1.75 Mc. — 42 turns No. 22 e., 2 inches long.
3.5 Mc. — 21 turns No. 18 e., 2 inches long.
7 Mc. — 15 turns No. 18 e., 2 inches long.
All coils wound on 4-prong, 1½-inch diameter forms.

A Simple Tetrode Oscillator

The unit shown in Figs. 1201–1202 represents one of the simplest types of amateur transmitters. The various parts are assembled on a breadboard purchased already finished at a "dime" store. Rubber feet at the corners elevate the base to clear mounting screws. A "ground" wire is run from one side of the crystal socket to one side of the coil socket, to which all ground connections shown in the diagram are made.

Since parallel plate feed is used, the only exposed high-voltage points are the plate-circuit r.f. choke and the high-voltage power terminal. Grid bias is obtained entirely from the cathode resistance. Either simple voltage feed to a half-wave antenna or an antenna a multiple of one-half wavelength long, or link coupling to an antenna tuner by adding a link winding at the bottom of the form as indicated in the diagram, may be used.

Although a 6L6 tube is shown in the photograph, a 6V6 might be used at lower plate voltage without circuit alteration. Any available power supply delivering up to 450 volts or so may be used, the power output obtainable increasing with the voltage applied. The unit shown in Fig. 1203 is suitable. The two units

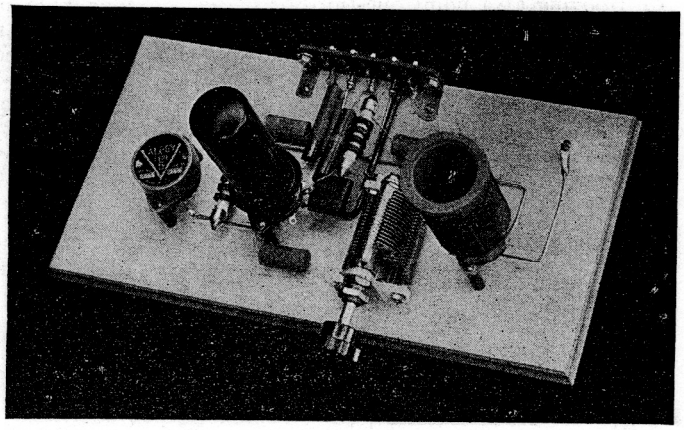

Fig. 1202 — A simple breadboard crystal-controlled transmitter. The grid r.f. choke is located between the crystal and 6L6 and the plate choke is to the right of the tube. The cathode and screen resistors are to the rear of the 6L6. The blocking condenser, C_2, is between the tube and tank condenser.

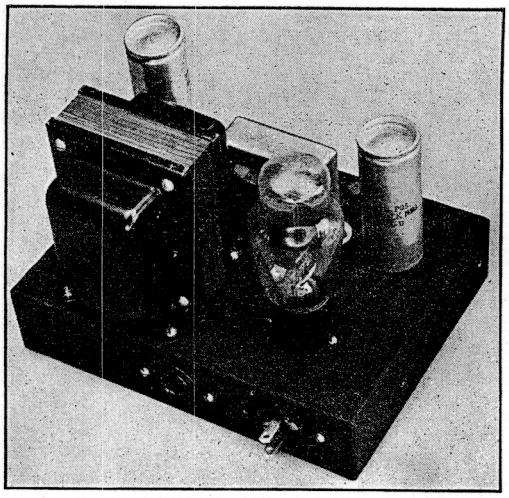

Fig. 1203 — This power supply delivers 450 volts at a full-load current of 130 ma., with 0.3 per cent ripple and measured regulation of 17 per cent. If converted to a choke-input filter by inserting a similar choke between the rectifier and present filter, the output voltage is reduced to about 300 volts. The chassis measures 7 × 9 × 2 inches. Filament and plate voltages are brought out to a four-prong socket. The circuit is given in Fig. 1204.

are connected by a four-wire battery cable with a four-prong plug at the power-supply end to fit the outlet in the power supply.

Since the circuit is not designed for frequency doubling, a separate crystal will be required for each frequency to be used.

Tuning — A milliammeter with a scale of 100 or 200 ma. should be connected in series with the key, as shown in Fig. 1201, as an aid in tuning. With a suitable coil and crystal in place and the high voltage turned on, a rise in plate current should occur when the key is closed. The plate tank condenser, C_1, should then be rotated until there is a pronounced dip in plate current at resonance. If the voltage-fed antenna is used, it may now be connected to the antenna terminal and a temporary wire run from the antenna terminal to reach the coil, L_1. Starting at a point one-third or half-way up from the bottom of the coil, scrape the wire at a spot, being careful not to short-circuit turns, and let the antenna wire rest against the bare spot. Tuning the transmitter as before, the plate-current dip should again be found, although less pronounced this time. The tap should be moved gradually toward the top of the coil until only a slight dip in plate current is observed as the plate tank circuit is tuned through resonance. At each adjustment of the antenna tap, the transmitter should be tested to make sure that the circuit keys well. Should a point be reached where it is difficult to get the crystal to start, the tap should be backed off somewhat. It will be found possible to load up the circuit more with certain crystals than others, while still maintaining good starting and keying characteristics. When a satisfactory point has been found, the tap may be soldered in place permanently and a connection made through one of the unused pins on the coil form.

With a 6L6 tube and a plate supply delivering 400 volts, the screen voltage will be about 250 volts. The tube will draw about 75 ma. nonoscillating, dipping to about 50 ma. at resonance with the antenna disconnected. It should be possible to load up the circuit until the tube draws about 80 ma. at resonance. Under these conditions, the power output on each band should be 15 to 20 watts.

A Low-Power Antenna Tuner

If an antenna with tuned feeders is used, the antenna tuner shown in Figs. 1205–1206 may be used to couple the 6L6 oscillator-transmitter to the feeders. The link winding of the transmitter and that of the antenna tuner should be connected with a pair of closely spaced wires.

The circuit, shown in Fig. 1205, is arranged so that different tuning combinations may be obtained by shifting the clips F, G and H. When F is connected to A, H is connected to D, and B and C are connected together, the two sections of C_1 in series are connected across L_1, forming a low-capacity parallel-tuned circuit. When H is connected to E and G to D, the other connections remaining the same, a high-capacity parallel circuit is obtained. For series tuning, H is connected to E, F to B and G to C. A low-capacity series-tuned circuit is provided by connecting F to B and H to C.

Dimensions are given for antenna coils of four different sizes, which are approximately correct for the band indicated when parallel tuning is required. For series tuning, the coil for the next-higher frequency band usually will be satisfactory. In some cases, where the feeders are not close to exact multiples of one-quarter wavelength for the frequency in use, slight alterations in coil dimensions may be re-

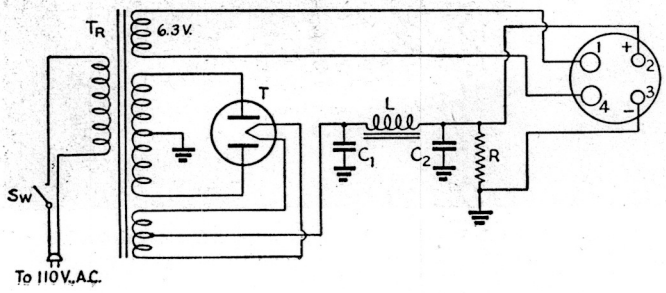

Fig. 1204 — Circuit diagram of the 450-volt 130-ma. power-supply unit.
C_1 — 4-μfd. 600-volt electrolytic (Mallory HS691).
C_2 — 8-μfd. 600-volt electrolytic (Mallory HS693).
L — Filter choke, 10 henrys, 175 ma., 100 ohms (Utah 4667).
R — 15,000 ohms, 25-watt.
T — Type 80 rectifier tube.
Tr — Power transformer, 400 volts each side of center-tap; rectifier filament winding, 5 volts, 3 amperes; r.f. filament winding, 6.3 volts, 6 amperes (Utah Y616).

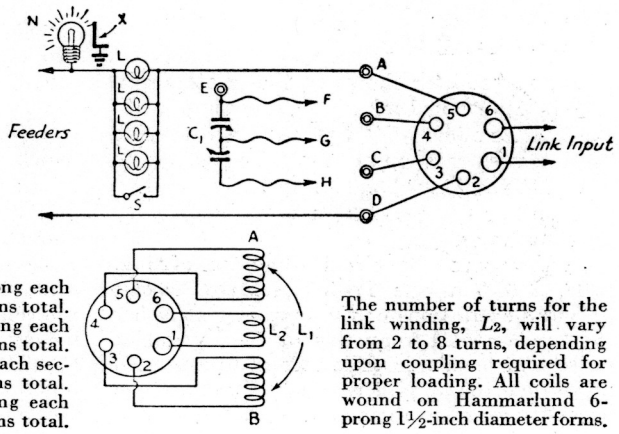

Fig. 1205 — A low-power antenna tuner.

A shows connections to the coil socket. C_1 has a capacity of 140 $\mu\mu$fd. per section (Hammarlund MCD-140). *L* is a 250-ma. dial light, No. 46. *N* is a ¼-watt neon bulb. *X* is a grounded piece of metal which provides capacitive coupling for igniting the neon bulb. *S* is a switch or clip used for short-circuiting the lamps after tuning.

B shows the connections to the 6-prong coil form. L_1, whose approximate dimensions are given below, is wound in two sections, with the link winding, L_2, in between them.

L_1 — 1.75 Mc. — 20 turns No. 22 e., ¾-inch long each section, ½-inch between sections, 40 turns total.
3.5 Mc. — 11 turns No. 20 e., ¾-inch long each section, ½-inch between sections, 22 turns total.
7 Mc. — 6 turns No. 20 e., ¾-inch long each section, ½-inch between sections, 12 turns total.
14 Mc. — 3 turns No. 20 e., ½-inch long each section, ¼-inch between sections, 6 turns total.

The number of turns for the link winding, L_2, will vary from 2 to 8 turns, depending upon coupling required for proper loading. All coils are wound on Hammarlund 6-prong 1½-inch diameter forms.

quired to permit tuning the system to resonance. The high-capacity circuits usually will be required for the lower frequencies, while the low-capacity connections will serve for the higher frequencies. Coupling may be adjusted by altering the number of turns in the windings at each end of the link line.

Construction — The two uprights and the strip supporting the indicating lamps are pieces of "1 by 2" stock. The uprights are each 13 inches long and the cross-strip 12 inches long; these dimensions may be changed to suit the constructor. The shelf for the condenser and coil is made of a piece of crate wood 4½ inches wide. The panel is of plywood 7 inches high.

The dial lamps are soldered to a pair of parallel wires supported at each end on small stand-off insulators. The bottom of the neon bulb is soldered to a short piece of wire between a third pair of stand-offs. The piece of grounded metal next to the neon bulb is about 1¾ inches square. This provides a capacity to ground which enables the neon bulb to operate without touching the hand to it.

The socket for the plug-in coil is mounted on the shelf with spacers and wood screws. The shield between the two sections of the variable condenser is removed to permit mounting it by a screw through the hole in the ceramic to the shelf. The shaft of the condenser is cut off and an insulating coupling inserted between the shaft and the control knob. The contacts for shifting connections consist of machine screws set in a small strip of bakelite.

The neon bulb and the dial lamps can be used to indicate resonance in the antenna circuit and relative (not actual) power output. The lamps will be useful whenever the length from the far end of the antenna to the feeder terminals is near an odd multiple of one-quarter wavelength for the frequency of operation, while the neon bulb will be useful where the length is near an even multiple. In tuning with the lamps, all sockets should be filled at the start. If, as an indication of resonance is obtained by an increase in plate current, the lamps show no indication, they should be removed, one at a time, until the remaining lamps start to glow. Sufficient lamps should be kept in the circuit to prevent danger of burnout. After the antenna has been tuned for maximum power output, the lamps should be short-circuited with the clip.

When using the neon bulb, the grounded metal plate should be bent near it until the bulb lights (assuming the transmitter is tuned to approximate resonance by the plate-current meter). The plate should be no closer to the bulb than necessary for satisfactory indication.

¶ Complete 15- to 25-Watt Oscillator Transmitter

The three units of Figs. 1202, 1203 and 1206 may be combined to form a simple, inexpensive low-power transmitter, complete from power supply to antenna tuner.

For convenience and economy of space, the units may be assembled on a vertical relay rack. The plate milliammeter may be mounted in the antenna-tuner unit, if desired.

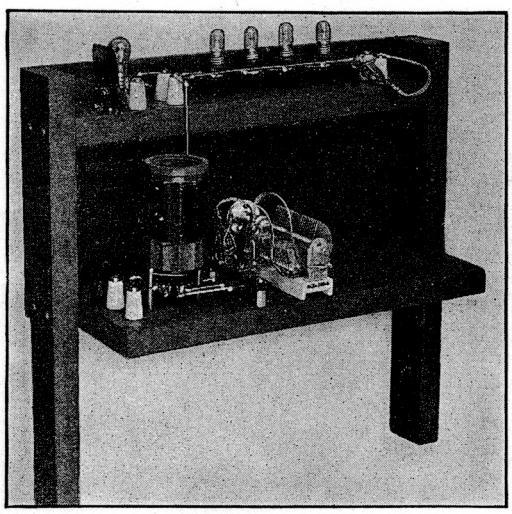

Fig. 1206 — Rear view of an antenna tuner for low-power transmitters. Dial lamps and a neon bulb are used as r.f. indicators. The unit is made to fit over the transmitter shown in Fig. 1202. Circuit is given in Fig. 1205.

A Two-Stage 45-Watt C.W. Transmitter Using 6L6s

The transmitter shown in the photographs of Figs. 1207 and 1209 will handle an input to the final amplifier of 45 watts and will provide output, with crystals of proper frequencies, in any of the amateur bands from 1.75 to 14 Mc. The unit is complete from power supply to antenna tuner.

Referring to the circuit diagram of Fig. 1208, a 6L6 in the Tri-tet oscillator circuit provides excitation for the amplifier at either the fundamental frequency of the crystal or its second harmonic. The second 6L6 is used as an inverted amplifier, which eliminates the necessity for neutralizing and makes an exceptionally fool-proof arrangement. This transmitter is recommended especially for the beginner who has had little previous experience with oscillator-amplifier transmitters. The oscillator output is coupled to the amplifier input by the small winding, L_3, in the cathode circuit of the amplifier.

Both stages are parallel-fed, permitting mounting the tank condensers directly on the metal chassis without insulation. The transmitter is keyed in the common cathode-return lead of both stages. Key connections are made through the jack, J. Pin jacks are provided at the rear of the chassis for making meter connections. A milliammeter, connected between the center and left-hand pin jacks in the wiring diagram, registers oscillator-cathode current. Connecting the meter between the central and right-hand jack permits reading of the amplifier-cathode current. Shorting the meter jacks when the meter is not in the circuit is not required, since the cathode circuits remain closed through the shunting resistors, R_3 and R_4.

An antenna tuner with provision for either series or parallel tuning is link-coupled to the amplifier output.

A condenser-input filter is used in the power supply. Resistors R_9, R_{10}, R_{11} and R_{12} are included to equalize the voltage drop across the sections of the electrolytic filter condensers.

Construction — A rectangular hole for the transformer terminals is cut in the chassis by drilling half-inch holes at the four corners and sawing out with a hacksaw. The shield between the two sections of the split-stator antenna condenser, C_{16}, is removed, leaving a hole by which the condenser may be mounted on the chassis with its shaft 4¾ inches from the end of the chassis. The two tank condensers, C_1 and C_2, are shaft-mounted in the front edge without insulation at a height to bring their shafts level with that of C_{16}. C_2 is mounted at the center, while the shaft of C_1 is located 4¾ inches from the end of the chassis to balance C_{16}. The three antenna terminals are jack-top binding posts, insulated from the chassis with National button-type polystyrene insulators which are drilled out to fit the posts.

The small parts, such as by-pass condensers, blocking condensers, resistors and r.f. chokes, are grouped around the points at which they connect. All high-voltage wiring is done with heavily insulated wire. R.f. wiring is done, for the most part, with short, straight sections of heavy bare wire, well-spaced from the chassis and any near-by components.

The crystal and cathode-coil sockets are wired up as shown in Fig. 1260, and pin jacks for making connections to the v.f.o. unit are set in the left-hand end of the chassis. It is very important that the leads between the pin jacks and the cathode-coil socket be kept as short as possible.

The power transformer suggested in the list of components is fitted with two sets of high-voltage secondary terminals. The pair for the lower-voltage secondary, marked Nos. 12 and 14, should be used.

All coils are wound on 1½-inch diameter forms. Winding data are given in the table of components. Where close-wound coils are not definitely indicated, the required number of turns must be spaced out to fill the specified length on the form.

Tuning — For preliminary tuning, a crystal and set of coils for the band in which the crystal frequency lies should be plugged in. A

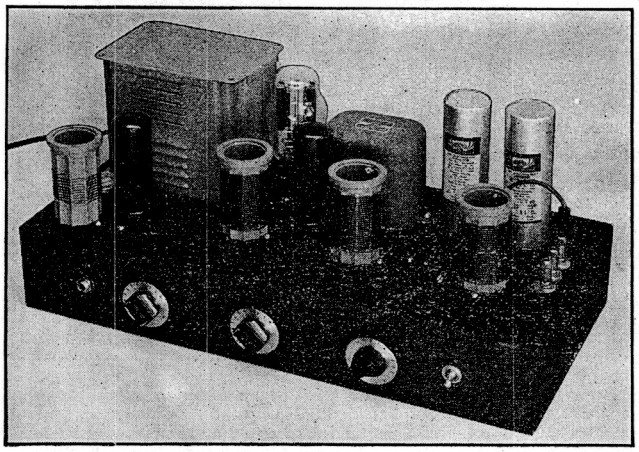

Fig. 1207 — A 45-watt two-stage 6L6 c.w. transmitter, complete with power supply and antenna tuner. The crystal socket is behind cathode coil, L_1, at the left-hand end of the chassis. The 6L6 amplifier tube is between the oscillator plate coil, L_2, and the amplifier plate coil, L_4, at the center. The coil at the right is L_7 in the antenna tuner. Terminals at extreme right are for antenna connections. Power-supply components are arranged along the rear. The three controls in front are for the oscillator plate tank condenser, C_1, amplifier plate tank condenser, C_2, and antenna tank condenser, C_{16}, respectively from left to right. The key jack, J, is at the left and the power switch, Sw, at the right. The chassis measures 8 × 17 × 3 inches. An insulated shaft coupling is used between the shaft of the antenna-coupler tuning condenser, C_{16}, and the panel-bearing assembly in the front edge of the chassis.

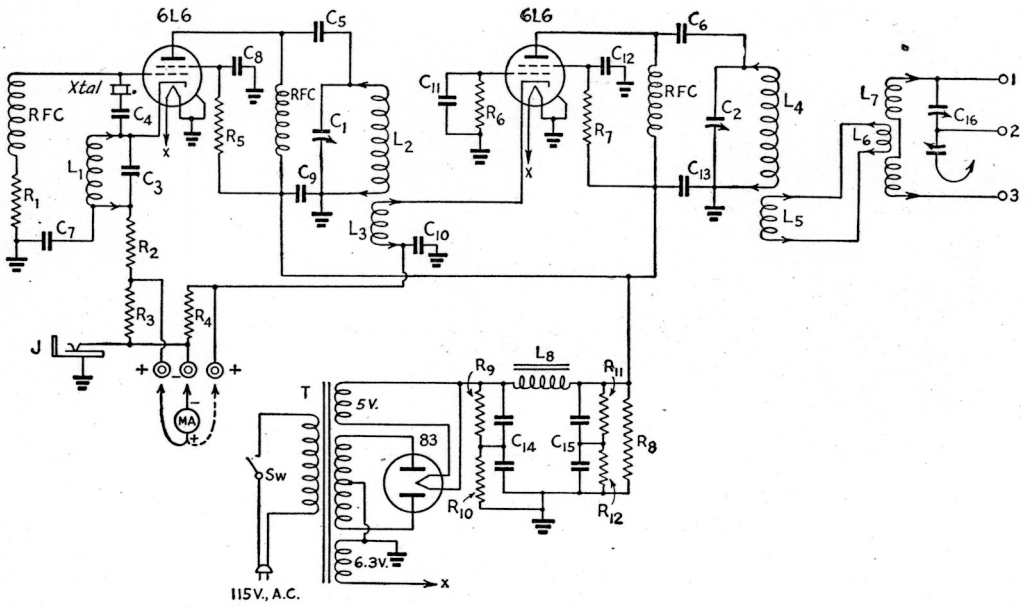

Fig. 1208 — Circuit diagram of the two-stage 6L6 45-watt c.w. transmitter with power supply and antenna tuner.

C_1, C_2 — 150-$\mu\mu$fd. variable (National ST-150).
C_3 — 100-$\mu\mu$fd. mica.
C_4, C_5, C_6 — 0.001-$\mu\mu$fd. mica.
C_7, C_8, C_9, C_{10}, C_{11}, C_{12}, C_{13} — 0.01-μfd. paper.
C_{14}, C_{15} — Dual 8-8 μfd. 450-volt electrolytic with 4 leads, sections connected in series.
C_{16} — 140-$\mu\mu$fd. per section variable (Hammarlund MCD-140-M).
J — Closed-circuit jack for key.
R_1 — 0.1 megohm, 1-watt.
R_2 — 500 ohms, 1-watt.
R_3, R_4 — 25 ohms, 1-watt.
R_5 — 50,000 ohms, 10-watt.
R_6 — 25,000 ohms, 1-watt.
R_7 — 25,000 ohms, 10-watt.
R_8 — 50,000 ohms, 10-watt.
R_9, R_{10}, R_{11}, R_{12} — 0.5 megohm, ½-watt.
RFC — 2.5-mh. r.f. choke.
Sw — S.p.s.t. toggle switch.
T — Combination transformer: 400 volts each side of center-tap, 150 ma.; 5-volt 3-ampere filament winding for 83 rectifier; 6.3-volt 4-ampere winding for 6L6s (UTC type S-39; low-voltage secondary taps used).

L_1 — For 1.75-Mc. crystals — 32 turns No. 24 d.s.c., close-wound.
For 3.5-Mc. crystals — 10 turns No. 22, 1-inch long; 100-$\mu\mu$fd. mica condenser mounted in form and connected across winding.
For 7-Mc. crystals — 6 turns No. 22, ⅝-inch long.
L_2, L_4 — 1.75-Mc. band — 55 turns No. 26, 1¾ inches long.
3.5-Mc. band — 26 turns No. 20, 1¾ inches long.
7-Mc. band — 15 turns No. 18, 1½ inches long.
14-Mc. band — 10 turns No. 18, 1½ inches long.
L_3 — (Wound close to and below L_2.):
1.75-Mc. band — 14 turns No. 26, close-wound.
3.5-Mc. band — 9 turns No. 24, close-wound.
7-Mc. band — 6 turns No. 20, close-wound.
14-Mc. band — 4 turns No. 20, close-wound.
L_5, L_6 — 3 to 6 turns as required for proper coupling to antenna. L_5 wound close to and below L_4; L_6 wound between sections of L_7.

L_7 * 1.75 Mc. — 20 turns No. 22, ¾-inch long each section, with ½-inch space between sections, 40 turns total.
3.5 Mc. — 11 turns No. 20, ¾-inch long each section, with ½-inch space between sections, 22 turns total.
7 Mc. — 6 turns No. 20, ¾-inch long each section, with ½-inch space between sections, 12 turns total.
14 Mc. — 3 turns No. 20, ½-inch long each section, with ¼-inch space between sections, 6 turns total.
All above coils wound on Hammarlund 1½-inch diameter forms. Four-prong are used for L_1, five-prong for all others.
L_8 — Filter choke, 6 henrys, 175 ma. (UTC S29).

* See text for usage.

milliammeter with a scale of 150 or 200 ma. will serve for tuning both stages. With the meter connected in the oscillator circuit, the key should be closed and C_1 tuned until the plate current dips near maximum capacity. When the dip has been found, the condenser should be set slightly on the low-capacity side to assure reliable keying. The best setting can be determined by listening to the transmitter signal on a receiver, with the receiving antenna removed to prevent blocking.

With the oscillator correctly adjusted, the milliammeter should next be shifted to the amplifier plate circuit and C_2 similarly tuned for a plate-current dip near maximum capacity.

With the same crystal and cathode coil in use, the coils for the next-higher frequency band may be plugged in and the tuning process repeated for this set of coils. The transmitter will then be tuned to the second harmonic of the crystal frequency, or twice its fundamental frequency. Thus output can be obtained in two bands from any one crystal, providing its second harmonic does not fall outside an amateur band. If the coils are carefully trimmed, it will be possible to tune to the crystal fundamental near the maximum-capacity settings of C_1 and C_2 and to the second harmonic near minimum capacity. It should be borne in mind that the cathode coil requires changing only in case a

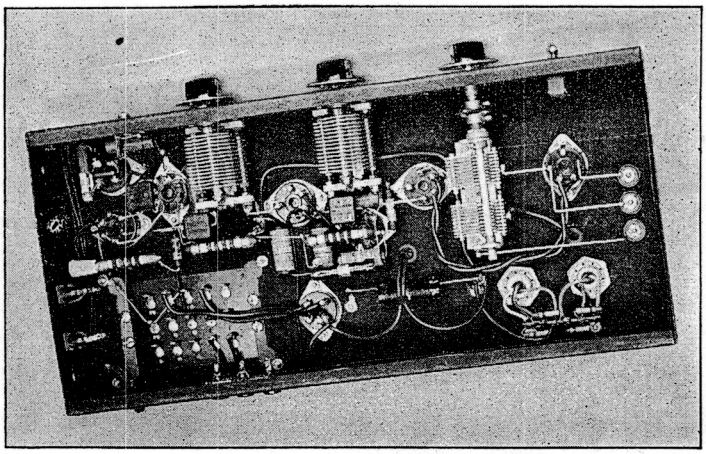

Fig. 1209 — All wiring connections are made underneath the chassis of the 45-watt c.w. transmitter. The sockets, the filter condensers, C_{14} and C_{15}, and the power transformer all are submounted. C_{16} is to the right, C_2 at the center, and C_1 at the left. Meter pin jacks, with shunting resistors, R_3 and R_4, are mounted along the rear edge of the chassis at the left. The crystal and cathode coil sockets are wired up as shown in Fig. 1260, permitting use either of crystal control or of a variable-frequency oscillator, as desired. The pin jacks along the right end of the chassis are for the v.f.o. input connections, if used. It is highly important that leads between the pin jacks and the cathode coil socket be kept short.

crystal is used whose frequency is in a different band; the same cathode coil serves for fundamental and harmonic operation.

An inverted amplifier does not operate efficiently as a frequency doubler. Therefore, operation of the amplifier as a second doubler is not recommended. This type of amplifier also is not recommended for modulation, and therefore is not suitable for radiotelephony.

The antenna tuner — By changing the position of the banana plug which fits the jack-top output binding posts, as indicated in the circuit diagram several combinations may be obtained. Placing the plug in terminal No. 3 and connecting the feeders to terminals 1 and 3 provides a low-capacity parallel-tuned circuit. By placing the plug in the top of terminal 1, strapping terminals 2 and 3 together and connecting the feeders to 1 and 3, parallel tuning with high capacity is obtained. By keeping the plug in terminal 1 and connecting the feeders between 2 and 3, series tuning with high capacity may be secured. Finally, by leaving the plug open and connecting the feeders to 2 and 3, the circuit becomes one having series tuning with low capacity.

Antenna coils of four sizes are listed among the coil data. Using a combination of one of these coils with various arrangements of tuning, it should be possible to arrive at a satisfactory tuning and coupling adjustment. The dimensions given will be approximately correct for parallel tuning in the band indicated. For series tuning, the coil for the next higher-frequency band will be approximately correct, if feeder lengths are reasonably close to quarter-wavelength multiples. The output coupling may be adjusted, by the process of changing the number of turns at each end of the link line, to load the amplifier to a maximum plate current of 100 to 125 ma.

When resonance points have been found, the proper procedure in tuning is first to set the antenna-tuning circuit well away from resonance, and then to tune the oscillator. Next, tune the amplifier to maximum plate-current dip, and, finally, swing the antenna-tuning condenser into resonance, as indicated by a peak in the amplifier plate current.

By proper adjustment it should be possible to obtain a power output of 25 to 30 watts in all bands, the higher output power occurring at the lower frequencies. With a plate voltage of 450, an amplifier loading which results in a plate current of 100 to 125 ma. ordinarily represents optimum adjustment; greater loading will usually result in a decrease in output.

The oscillator plate current at resonance normally will run between 22 and 32 ma., depending upon frequency and whether or not the oscillator is doubling frequency. When operating at the fundamental the oscillator plate current will run somewhat higher than when doubling, because of the necessity for tuning off exact resonance to permit reliable keying. With a plate voltage of 450, the oscillator screen voltage should be approximately 200 volts and the screen voltage of the amplifier, when tuned and loaded, about 260 volts.

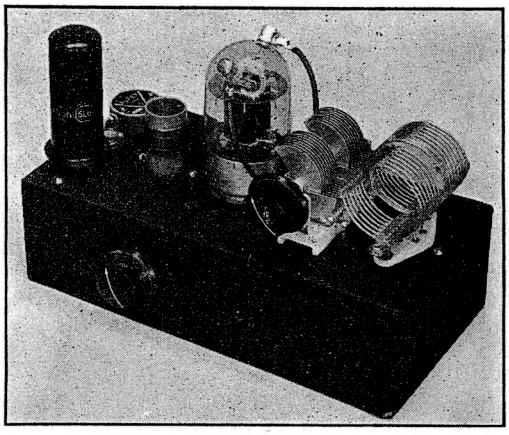

Fig. 1210 — An inexpensive three-band transmitter using an 815 dual beam tetrode as the output tube. The transmitter is assembled on a 3 × 5 × 10-inch chassis. The oscillator plate coil and amplifier grid coil are wound on the small 1-inch form between the 6L6 and the 815. The lower control is for the amplifier grid condenser which also controls the tuning of the oscillator plate tank.

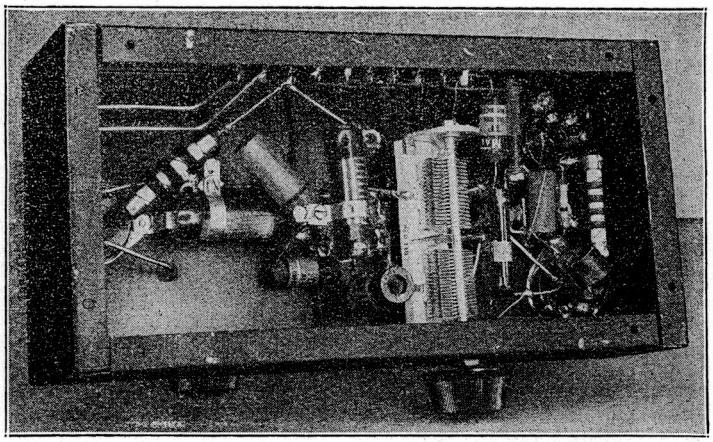

Fig. 1211 — Bottom view of the 815 transmitter, showing the under-chassis arrangement. The dual-section amplifier grid tuning condenser, C_1, is placed between the 815 socket and the coil socket for L_2 and L_3, so that the connections for the tuned circuit can be kept short. The cathode coil, L_1, is wound on a ½-inch diameter form with a sheet of paper placed between the winding and the form, to facilitate removal. Before it is removed the winding is given a coating of Duco cement or coil dope. The coil terminals are soldered directly to the oscillator tube socket. The normal power output of the transmitter at the maximum rated plate voltage of 500 should be 50 to 55 watts.

¶ An Inexpensive Three-Band Transmitter Using the Type 815

Figs. 1210 and 1211 show an inexpensive transmitter designed to operate in the 3.5-, 7- and 14-Mc. bands from a 3.5-Mc. crystal. A 6L6 Tri-tet oscillator is used to drive a type 815 in a push-pull amplifier circuit. As shown in the wiring diagram, Fig. 1212, the oscillator and amplifier stages are coupled inductively, while the tuning condenser is connected in the grid circuit of the amplifier. Since the 815 is a screened tube, no neutralization is necessary at the frequencies at which the transmitter is designed to operate.

The 815 operates at all times as a straight amplifier. Excitation at 14 Mc. is obtained by tuning the plate circuit of the oscillator to the fourth harmonic of the crystal frequency. The 60-ma. dial lamp, B, connected in series with the crystal, serves to indicate relative crystal r.f. current.

Tuning — This transmitter is designed to operate from a single plate supply delivering up to 500 volts at 200 milliamperes or more. The unit shown in Fig. 1214 will be satisfactory for this purpose, and will also furnish the 6.3-volt supply required for the heaters. A 45-volt "B" battery is also required for biasing the 815, to limit the plate current to a low value when the key is open.

Fig. 1212 shows how external meters may be connected for tuning the transmitter. Setting up for any one of the three bands is merely a matter of plugging in the coils for the band desired, as indicated in Fig. 1213.

It is advisable to test the oscillator circuit first, and the plate and screen voltages should be removed from the 815 during this period. With voltage applied to the oscillator, the 815 grid circuit, C_1L_3, should be brought to resonance as indicated by maximum reading on a milliammeter connected in the amplifier grid-bias lead. The dropping resistor, R_4, should be set at its full value of 6000 ohms during the preliminary testing; to secure proper plate voltage, a final setting may be made when the power supply is completely loaded by the entire transmitter. The grid current should be in the neighborhood of 10 milliamperes on all three bands. This may be adjusted by changing turns on L_2, or by detuning C_1 if grid current is excessive. The oscillator plate current will re-

Fig. 1212 — Circuit diagram of the inexpensive three-band transmitter using a type 815 dual-tetrode output tube.

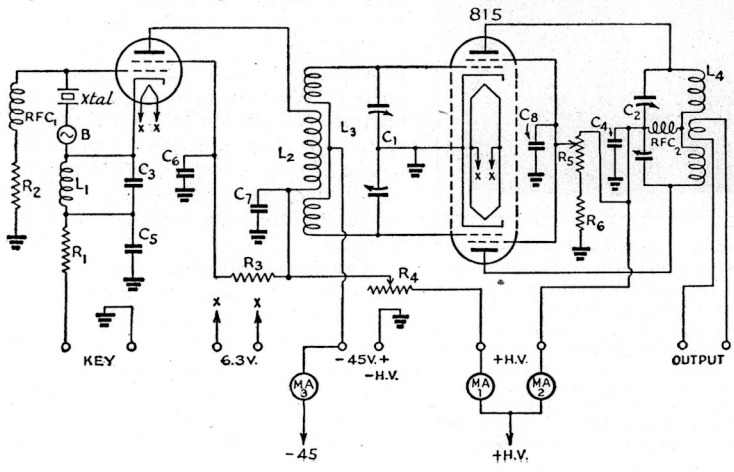

C_1 — 140-$\mu\mu$fd. per section (Hammarlund HFD-140).
C_2 — 140-$\mu\mu$fd. per section (Hammarlund MCD-140-M).
C_3 — 200-$\mu\mu$fd. mica.
C_4 — 0.005-μfd. paper, 1600-volt.
C_5, C_6, C_7, C_8 — 0.01-μfd. paper, 600-volt.
R_1 — 200 ohms, ½-watt.
R_2 — 20,000 ohms, 1-watt.
R_3 — 20,000 ohms, 10-watt.
R_4 — 6000 ohms, 25-watt.
R_5, R_6 — 5000 ohms, 25-watt.
RFC_1 — 2.5-mh. r.f. choke (National R-100).
RFC_2 — 1-mh. r.f. choke (National R-300).
B — 60-ma. dial lamp.
L_1 — 21 turns No. 24 d.s.c., close-wound, ½-inch diameter.
L_2, L_3, L_4 — See Fig. 1213.
MA_1, MA_2, MA_3 — Milliammeters with ranges of 100, 300 and 25 ma., respectively.

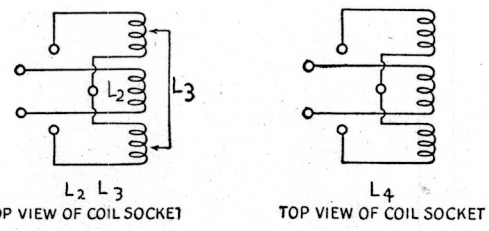

Fig. 1213 — Coil connections and data for the 815 transmitter. Data for coil L_1 is given under Fig. 1212.

	L_2	L_3
3.5-Mc.	17 turns No. 24 d.s.c.	54 turns No. 28 d.s.c. 27 turns each side of primary.
7-Mc.	12 turns No. 22 d.s.c.	22 turns No. 22 d.s.c. 11 turns each side of primary.
14-Mc.	9 turns No. 22 d.s.c.	12 turns No. 22 d.s.c. 6 turns each side of primary.

Above coils are wound on 1-inch diameter forms (Millen 45005). Approximately ⅛-inch spacing between windings.

L_4

3.5-Mc. — 40 turns No. 18, 1⅞-inch diameter, 2¼ inches long (B & W 80-JVL).
7-Mc. — 24 turns No. 16, 1⅞-inch diameter, 2¼ inches long (B & W 40-JVL).
14-Mc. — 14 turns No. 16, 1⅞-inch diameter, 2¼ inches long (B & W 20-JVL).

Above coils are wound in two sections with half the total number of turns each side of center. A ⅜-inch space is left at the center to permit the use of a swinging link. The Barker and Williamson coils are mounted on five-prong bases of the type which plug into tube sockets.

main almost constant during this tuning, there being relatively little power taken from the circuit.

After the oscillator has been checked, the amplifier may be put into operation. The screen voltage lead should be tapped in between the two 5000-ohm resistors, R_5 and R_6, to reduce the voltage applied to the screen grid and thus provide a safety factor during the preliminary tests. With plate voltage and grid excitation applied the off-resonance plate current should be 250 ma. or so, dropping to approximately 25 ma. when the plate circuit is tuned to resonance. A dummy load, such as a lamp, should be connected to the final tank circuit and the coupling adjusted to bring the on-resonance plate current to 150 ma. It may be necessary to wind a loop of several turns around the tank coil to obtain proper coupling.

Oscillator plate and amplifier screen-grid voltages should be adjusted to about 300 and 200 volts, respectively, by adjusting the taps on the two dropping resistors. It is probable that the amplifier plate current will either rise or fall at this point, depending upon whether the oscillator circuit and the 815 screen grid take more or less power than they did before. If the plate-current change is considerable, it will be wise to readjust the loading on the final and then make another check of the various voltages.

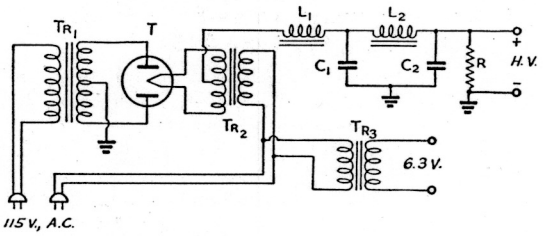

Fig. 1215 — Circuit diagram of the 450- or 560-volt 200-ma. power supply shown in the photograph of Fig. 1214.

C_1, C_2 — 8 μfd. 600-volt electrolytic (Mallory HS693).
L_1 — Input choke, 5-20 henrys, 200 ma., 130 ohms (Thordarson T19C35).
L_2 — Smoothing choke, 12 henrys, 200 ma., 130 ohms (Thordarson T19C42).
R — 20,000 ohms, 25-watt.
Tr_1 — 660 and 550 volts r.m.s. each side of center-tap, 250 ma. d.c. (Thordarson T-19P55).
Tr_2 — 5-volt 4-ampere filament transformer, 1600-volt insulation (Thordarson T-63F99).
Tr_3 — 6.3-volt 3-ampere filament transformer.

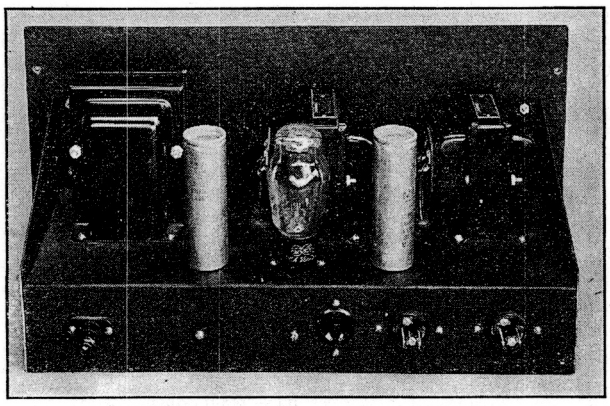

Fig. 1214 — This power-supply unit delivers either 450 or 560 volts at a full-load current of 200 ma. with 0.3 per cent ripple and measured regulation of 16 per cent. Taps are provided on the transformer secondary for the lower voltage. The chassis measures 7 × 17 × 3 inches and the panel 8¾ × 9 inches. Only the terminals of the filament transformer and chokes appear above the chassis, and these units are placed so that there is little danger of accidental contact. A 6.3-volt 3-ampere filament transformer is included for heating the filaments of the r.f. tubes. It is mounted underneath the chassis and its output terminals are brought out to a 115-volt receptacle at the rear. The circuit diagram of the supply appears in Fig. 1215.

With all voltages at the proper values it is to be expected that the various currents will be about as follows: oscillator plate, 40 ma.; 815 grid, 4 or 5 ma.; 815 plate, 150 ma. It will be found that a grid current of 4 to 6 ma. gives the best output and that more grid current fails to increase either the output or efficiency. A meter inserted in the amplifier screen-grid circuit should show a current reading of 60 ma.; about four-fifths of this is taken by the voltage divider, however.

When the transmitter is in actual operation, it may be observed that the amplifier plate current does not fall to complete cut-off when the excitation is removed. This is to be expected, unless the power supply in use has such excellent regulation as to prevent any considerable increase in

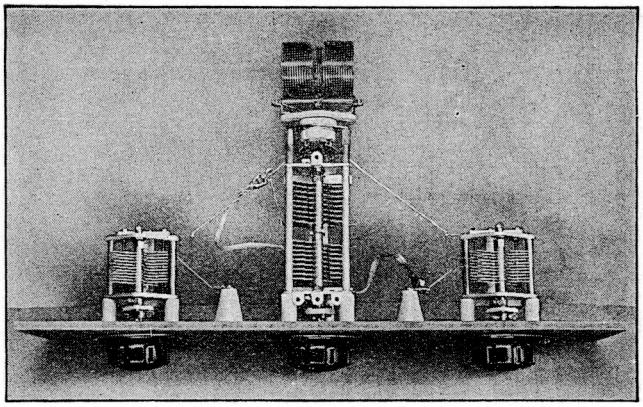

Fig. 1216 — A rack-mounting antenna tuner for low-power transmitters. C_1 is in the center, with C_2 and C_3 on either side. All of the components are mounted directly on the 5¼-inch panel. The variable condensers are mounted on the assembly rods on National type GS-1 insulating pillars which are fastened to the condenser end plates with machine screws from which the heads have been removed. Small Isolantite shaft couplings are used to insulate the controls. The coil socket is fastened to the rear end plate of the parallel condenser, C_1, with spacers to clear the prongs. Clips with flexible leads are provided for the split-stator parallel condenser, C_1, so that its sections may be connected either in parallel or in series to form either a high- or low-capacity tank circuit as required.

screen voltage when the load is greatly reduced. However, the plate current should drop to only a few milliamperes so long as the screen voltage does not reach a value which exceeds the normal voltage by more than 50 or 75 volts.

The amplifier plate coils are complete with links which permit working directly into a low-impedance line. This means that the amplifier may be fed into a concentric (73-ohm) or twisted-pair line, or that it may be link-coupled to an amplifier operating at higher input or to an antenna tuner for coupling to an antenna with tuned feeders. If desired, the oscillator circuit may be arranged for optional crystal or v.f.o. input as shown in Fig. 1260.

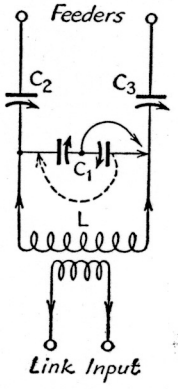

Fig. 1217 — Circuit of the rack-mounting antenna tuner for use with transmitters having final amplifiers which are operated at less than 1000 volts on the plate.

C_1 — 100 $\mu\mu$fd. per section, 0.045-inch spacing (National TMK-100-D) for higher voltages; receiving-type for lower voltages (Hammarlund MCD-100).

C_2, C_3 — 250 $\mu\mu$fd., 0.026-inch spacing (National TMS-250) for higher voltages; receiving-type for lower voltages (Hammarlund MC250).

L — B&W JVL series coils. Approximate dimensions for parallel tuning for each band are as follows:
1.75-Mc. band — 56 turns No. 24.
3.5-Mc. band — 40 turns No. 20.
7-Mc. band — 24 turns No. 16.
14-Mc. band — 14 turns No. 16.
28-Mc. band — 8 turns No. 16.

All coils are 1⅞ inches in diameter and 2¼ inches long, with the variable link located at the center. For series tuning, use of the coil specified for the next-higher frequency band will be approximately correct.

A Low-Power Antenna Tuner for Rack Mounting

In the rack-mounted low-power antenna tuner shown in Fig. 1216, separate series and parallel condensers are used. This arrangement, while requiring three variable condensers, has the advantage that no switching is necessary when changing over from series to parallel tuning. It also makes it possible to cover a wider range of antenna and transmission-line conditions, because the series condensers can be adjusted in conjunction with the parallel condenser to shorten the electrical length of the feeders whenever this is required to make parallel tuning effective. In addition, the series condensers provide a measure of control over the amplifier loading when parallel tuning is used.

Clips with flexible leads attached are provided for the parallel condenser, C_1, so that the sections may be connected either in parallel or in series to form either a high- or low-capacity tank circuit, as required. When the high-C parallel tank is desired, the two stators are clipped together, as shown by the dotted lines in the circuit diagram of Fig. 1217, and the rotor is connected to the opposite feeder. When the two sections are connected in series, for low-*C* operation, the break-down voltage is increased.

Under the circuit diagram, Fig. 1217, two sets of variable condensers are suggested. The smaller condensers should be satisfactory for low-power transmitters operating at plate voltages of 400 to 450 volts, while the condensers with larger spacing will be required for transmitters using higher voltages up to about 750 or 1000 volts.

Complete Two-Stage 70-Watt 3-Band Transmitter

The units shown in Figs. 1210, 1214 and 1216, with the addition of a 45-volt battery for bias, may be combined to form a complete transmitter. The smaller condensers listed for the antenna tuner may be used. If the transmitter is mounted on an 8¾-inch panel and 3½ inches is allowed for a meter panel, the complete transmitter will occupy a height of 26¼ inches.

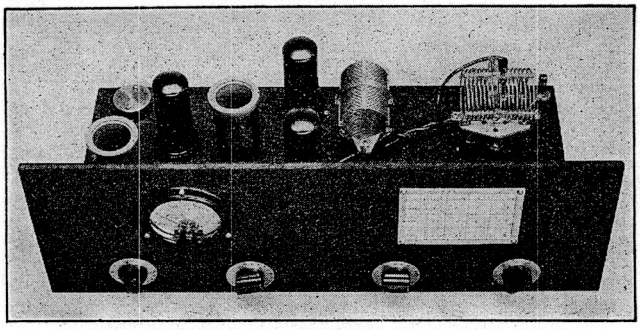

Fig. 1218 — A 90-watt c.w. transmitter using a 6L6 Tri-tet oscillator and a push-pull 6L6 amplifier. The rack-width panel of the transmitter is 7 inches high. The single milliammeter is switched from the oscillator to the amplifier by the rotary switch at the lower left. The three remaining controls are for tuning the oscillator plate, amplifier plate and antenna tank circuits. All sockets, except those for the amplifier- and antenna-tank coils are sub-mounted. The three insulated terminals just visible at the right rear behind the antenna coil, L_4, are the binding-post output connections for the antenna tuner.

A 90-Watt C.W. Transmitter Using Push-Pull 6L6s

In the 90-watt c.w. transmitter shown in Figs. 1218 and 1219, a 6L6 Tri-tet oscillator drives a pair of 6L6s in a push-pull inverted amplifier circuit. The circuit diagram appears in Fig. 1220.

The sockets for the crystal and the cathode coil are wired as shown in Fig. 1260, to permit feeding with a v.f.o. unit if desired. The plate circuit of the oscillator is parallel-fed to permit grounding of the rotor of C_2 in mounting. A high-capacity tank condenser is used so that two bands may be covered with one coil, reducing coil-changing when shifting from one band to another. The cathode coil, L_5, by which the oscillator and amplifier are coupled, is center-tapped to provide push-pull input to the amplifier stage.

While neutralization is not required, a certain amount is introduced through the fixed condensers C_9 and C_{10} from plates to cathodes partially to nullify the effects of degeneration inherent in this type of circuit and thereby reduce excitation requirements. Neutralization is not carried to the point where there is danger of instability. All r.f.-wiring leads in the amplifier should be made as short and direct as possible. The individual grid condensers, C_7 and C_8, should be connected directly at each socket.

The output of the amplifier is link-coupled to an antenna tuner. The lower stator of C_4 is fitted with a flexible lead terminated in an insulated banana plug which may be plugged into any one of the antenna terminals, which are jack-top binding posts. These posts are insulated from the chassis by mounting them in National polystyrene button-type insulators which have been drilled out. Series tuning with high capacity is obtained by placing the plug in terminal No. 1 and connecting the feeders to terminals Nos. 2 and 3, and series tuning with low capacity by leaving the plug free and connecting the feeders to terminals Nos. 2 and 3. High-capacity parallel tuning is obtained by placing the plug in terminal 1, shorting terminals 2 and 3, and connecting the feeders between 1 and 3, while parallel tuning with low capacity is obtained by placing the plug in terminal 3 and connecting to 1 and 3.

Both stages are keyed simultaneously in the cathode return leads. The milliammeter, *MA*, can be switched from the oscillator-cathode circuit to that of the amplifier. Switching of the meter is simplified by inclusion of the shunting resistances, R_6 and R_7, which are sufficiently high in value to have negligible effect upon the reading of the meter.

The transmitter can be operated at maximum input from the 450-volt 200-ma. power supply shown in Fig. 1214.

Tuning — Tuning of the transmitter is quite simple. It should be borne in mind that output from the oscillator may be obtained at either the fundamental frequency of the crystal or at the second harmonic of that frequency, and that the selection of the proper coil for L_1 depends upon the crystal frequency and not

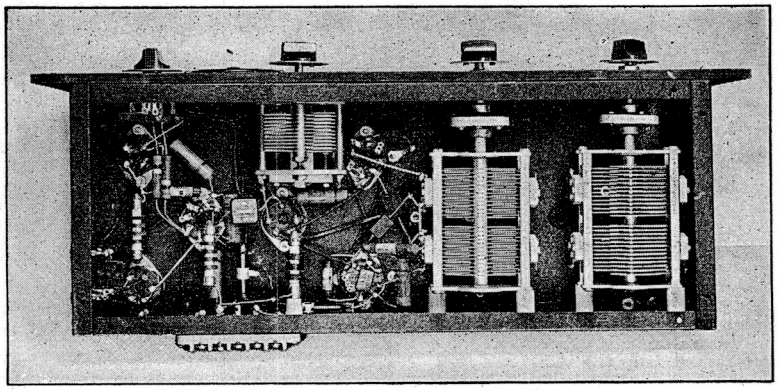

Fig. 1219 — The three tank condensers are mounted underneath the chassis of the 90-watt transmitter. The two split-stator condensers are mounted from the rear edge with insulating pillars, and their shafts are fitted with insulating couplings and panel bearings. They must be mounted so their shafts come level with that of C_2 to the left, which is mounted directly on the chassis. Heavy bare-wire leads through grommeted holes connect the amplifier and antenna tank condensers and coils.

the output frequency of the oscillator. Using the oscillator plate coils listed under Fig. 1220, the lowest-frequency band will be found near the maximum-capacity end on the dial of C_2, while the higher-frequency bands will be found near the minimum capacity end of its tuning range.

With the milliammeter switched to the oscillator circuit the plate-current reading should be about 60 ma. when the key is closed, if the full 350 volts is used on the plate. As C_2 is tuned to resonance, the oscillator plate current will dip to about 25 ma. at the lower frequencies and to about 50 ma. at the higher frequencies.

When the meter is switched to the amplifier stage, a plate-current reading of about 260 ma. should be obtained with the key closed. A plate-current dip to 50 ma. or less should be obtained when C_3 is tuned to resonance.

Once these adjustments have been completed, the antenna may be coupled and tuned. When the plate current of the amplifier increases to 200 ma. at resonance, this represents about optimum loading. Using a plate voltage of 450 and with proper adjustment of the amplifier, it should be possible to obtain a power output of 50 to 60 watts on all bands.

As with the single-tube inverted amplifier previously discussed, this transmitter is recommended for c.w. work only.

¶ Complete 90-Watt C.W. Transmitter

The 90-watt 6L6 r.f. unit of Fig. 1218 may be combined with the power-supply unit showing Fig. 1214 (with the 6.3-volt filament transformer included) to form a complete c.w. transmitter. The two units will have a combined height of 15¾ inches when mounted in a standard relay rack or cabinet.

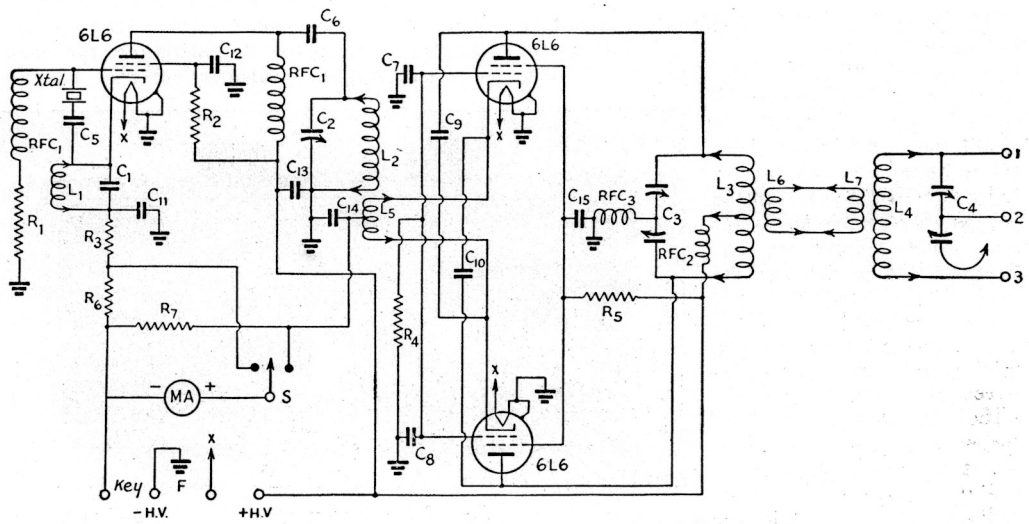

Fig. 1220 — Circuit diagram of the 90-watt push-pull 6L6 transmitter with a built-in antenna coupler.

C_1 — 100-$\mu\mu$fd. mica.
C_2 — 250-$\mu\mu$fd. variable (National TMS-250).
C_3, C_4 — 250 $\mu\mu$fd. per section (Hammarlund MTCD-250-C).
C_5, C_6 — 0.001-μfd. mica.
C_7, C_8 — 50-$\mu\mu$fd. mica.
C_9, C_{10} — 10-$\mu\mu$fd. mica.
C_{11}, C_{12}, C_{13}, C_{14}, C_{15} — 0.01 μfd. paper.
R_1 — 0.1 megohm, ½-watt.
R_2 — 50,000 ohms, 2-watt.
R_3 — 500 ohms, 1-watt.
R_4 — 25,000 ohms, 1-watt.
R_5 — 12,000 ohms, 10-watt.
R_6, R_7 — 25 ohms, 1-watt.
MA — 0–300 milliammeter.
S — S.p.d.t. switch.
RFC_1 — 2.5-mh. r.f. choke, 100-ma.
RFC_2 — 1-mh. r.f. choke, 300-ma. (National R300).
RFC_3 — V.h.f. parasitic choke (Ohmite Z-1).

L_1 * — For 1.75-Mc. crystals: 32 turns No. 24 d.s.c., close-wound.
For 3.5-Mc. crystals: 10 turns No. 22, 1 inch long; 100-$\mu\mu$fd. mica condenser mounted in form, connected across winding.
For 7-Mc. crystals: 6 turns No. 22, ⅝-inch long.

L_2 * — For 1.75- and 3.5-Mc. bands — 38 turns No. 18 d.c.c. close-wound.
For 3.5- and 7-Mc. bands — 20 turns No. 18, 1⅝ inches long.
For 7- and 14-Mc. bands — 9 turns No. 18, 1½ inches long.

L_3 ** — B & W JCL series coils, dimensions as follows:
1.75 Mc. — 60 turns No. 24, 2⅛ inches long.
3.5 Mc. — 44 turns No. 20, 2⅛ inches long.
7 Mc. — 26 turns No. 16, 2⅛ inches long.
14 Mc. — 16 turns No. 16, 1⅞ inches long.

L_4 *** — B & W JVL series coils, dimensions as follows:
1.75 Mc. — 56 turns No. 24.
3.5 Mc. — 40 turns No. 20.
7 Mc. — 24 turns No. 16.
14 Mc. — 14 turns No. 16.
14 Mc. (series) — 8 turns No. 16.

L_5 — 1.75- and 3.5-Mc. bands — 20 turns, centertapped, No. 24 e., close-wound, wound close to bottom of L_2 on same form.
3.5- and 7-Mc. bands — 14 turns, centertapped, No. 22 e., close-wound, wound ⅛-inch from bottom of L_2 on same form.
7- and 14-Mc. bands — 8 turns, centertapped, No. 20 e., close-wound, wound ⅛-inch from bottom of L_2 on same form.

L_6, L_7 — 3 turns at center of L_3 and L_4.

* All wound on Hammarlund 1½-inch diameter 4-prong forms.
** All 1½ inches in diameter.
*** All 1⅞-inch diameter, 2¼ inches long. Dimensions are approximate for parallel tuning for the band indicated. For series tuning, the coil for the next-higher frequency band is approximately correct.

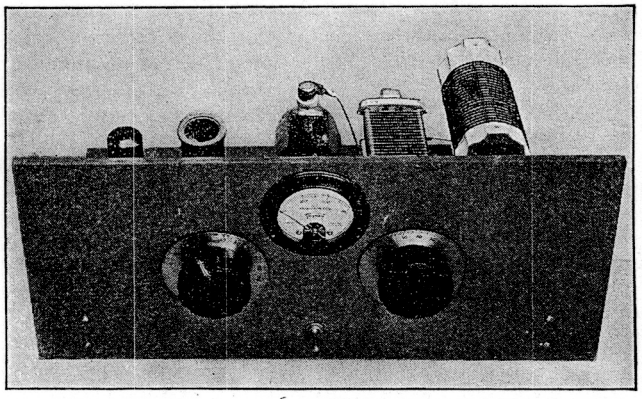

Fig. 1221 — Front view of the 200-watt beam-tube transmitter.

A Two-Stage 200-Watt Beam-Tube Transmitter

The simplicity of the 200-watt transmitter shown in Figs. 1221, 1222 and 1223 will appeal to many amateurs. As the circuit of Fig. 1224 shows, a 6L6 Tri-tet oscillator supplies excitation at either the crystal fundamental frequency or its second harmonic for the HY67 in the output stage. Since the latter is a screened tube, no neutralizing is required. Parallel feed in the oscillator circuit permits mounting C_2 on the chassis without insulation. The milliammeter may be switched to read either oscillator or amplifier cathode current. R_5 in series with the screen prevents parasitic oscillation.

Power supply — A 300-volt supply is required for the plate of the oscillator and the screen of the amplifier. This voltage, as well as fixed biasing voltage for the amplifier, may be obtained from the combination unit in Fig. 1236, using the components shown for 300-volt output. The supply shown in Fig. 1225 will furnish plate voltage for the amplifier.

Tuning — The simplicity of the circuit makes tuning easy. With a cathode coil, L_1, appropriate for the crystal in use, and an oscillator plate coil, L_2, which covers the crystal frequency with C_2 near maximum, the oscillator is tuned either to the fundamental frequency, near the maximum of C_2, or to the second harmonic, near the minimum capacity of C_2, by the customary plate-current dips. The key should not be kept closed for prolonged periods during this adjustment unless the 300-volt lead to the screen of the amplifier is disconnected. If the plate-current dips indicating both fundamental and harmonic are not found, it may be necessary to add or subtract a turn or two from L_2.

The amplifier is simply tuned to resonance with the proper coil for the desired output frequency in place by switching the meter to read amplifier cathode current. The amplifier may then be link-coupled to an antenna tuner, such as the one shown in Fig. 1226, and loaded in the usual way. As a matter of fact, it is preferable to tune the amplifier with the load connected, after one has become

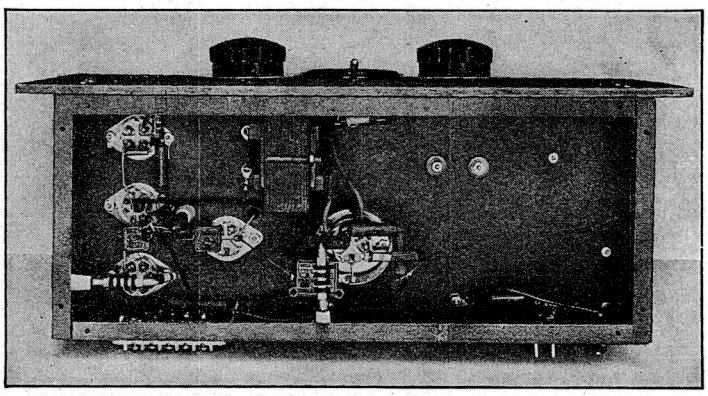

Fig. 1222 — Underneath the 3 × 7 × 17-inch chassis of the two-stage 200-watt beam-tube transmitter.

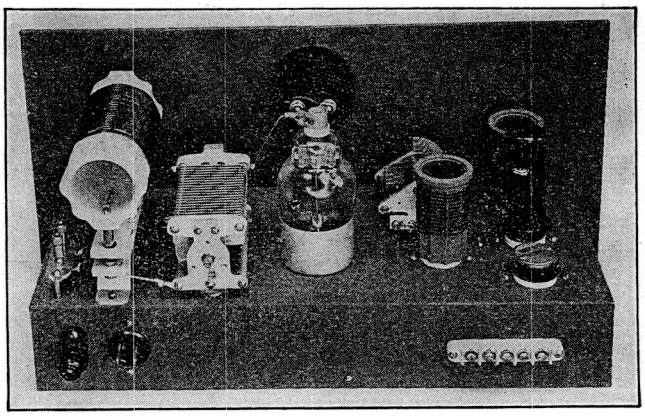

Fig. 1223 — The cathode coil, oscillator tube and crystal sockets of the 200-watt beam-tube transmitter are mounted in a row at the right. The socket for the HY67 is sunk an inch below the chassis level to shorten the plate lead, and the bottom portion of the tube is shielded with a section from a Hammarlund PTS tube shield. The amplifier plate tank condenser is insulated from the chassis by means of National polystyrene button-type insulators placed at the three mounting feet. The filament transformer and other small components are underneath the chassis, as may be seen in Fig. 1222. Power output of 130 to 150 watts on c.w. can be obtained on any of the bands covered. If the amplifier is to be plate-and-screen modulated, the input should be reduced to 1000 volts at 150 ma.

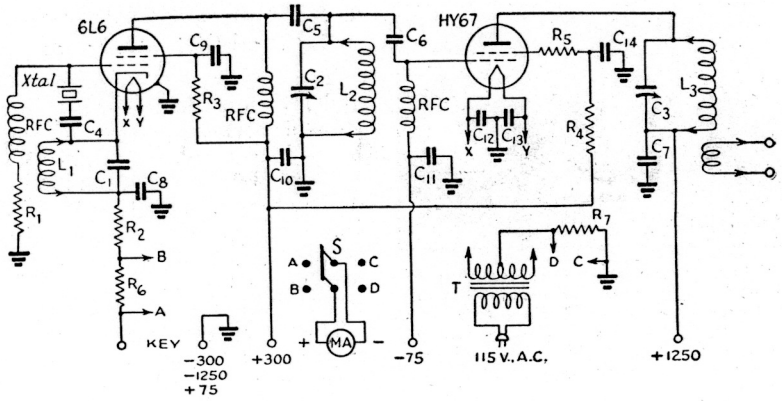

Fig. 1224 — Circuit diagram of the two-stage 200-watt beam-tube transmitter.

C_1 — 100-$\mu\mu$fd. mica.
C_2 — 300-$\mu\mu$fd. variable (National TMS-300).
C_3 — 250-$\mu\mu$fd. variable, 0.045-inch spacing (National TMK-250).
C_4, C_5 — 0.001-μfd. mica.
C_6 — 100-$\mu\mu$fd. mica.
C_7 — 0.001-μfd. mica, 5000-volt rating.
C_8, C_9, C_{10}, C_{11}, C_{12}, C_{13}, C_{14} — 0.01-μfd. paper.
MA — D.c. milliammeter, 0-300-ma. scale.
R_1 — 0.1 megohm, ½-watt.
R_2 — 500 ohms, 1-watt.
R_3 — 50,000 ohms, 10-watt.
R_4 — 2000 ohms, 10-watt.
R_5 — 50 ohms, 1-watt.
R_6 — 25 ohms, 1-watt.
R_7 — 25 ohms, 10-watt.
RFC — 2.5-mh. r.f. choke.
S — Double-pole double-throw toggle switch.
T — Filament transformer, 6.3 volts, 6 amperes (Thordarson T-19F98).
L_1 — For 1.75-Mc. crystals — 32 turns No. 24 d.s.c., close-wound.
For 3.5-Mc. crystals — 10 turns No. 22, 1-inch long; C_1 is mounted in form, connected across winding.
7-Mc. crystals — 6 turns No. 22, ⅝-inch long.
L_2 — 1.75- and 3.5-Mc. bands — 30 turns No. 20 e., 1½ inches long.
3.5- and 7-Mc. bands — 15 turns No. 18 e., 1½ inches long.
7- and 14-Mc. bands — 6 turns No. 18 e., ⅞-inch long.
All above coils wound on Hammarlund 1½-inch diameter coil forms.
L_3 — 1.75-Mc. band — 32 turns No. 18 d.c.c., 3½ inches long.
3.5-Mc. band — 20 turns No. 12, 3 inches long, turns wound in successive grooves.
7-Mc. band — 9 turns No. 12, 1⅜ inches long, turns wound in successive grooves.
14-Mc. band — 6 turns No. 12, 1¾ inches long, turns wound in alternate grooves.
All above wound on National XB-10A 2½-inch diameter coil forms. The form for the 1.75-Mc. coil is covered with a sheet of cardboard before winding. Number of link turns is adjusted for proper loading.

accustomed to the tuning procedure, so as to limit screen heating.

Under normal conditions, the oscillator cathode current will run between 35 and 40 ma. when tuned to resonance in any band, while the cathode current of the amplifier should be about 225 ma. when fully loaded. This total cathode current will include screen current of about 30 ma. and grid current of about 20 ma. The oscillator screen voltage should be between 175 and 200 volts, while the amplifier screen voltage will run about 240 volts with the amplifier tuned and loaded.

If desired, the oscillator circuit may be arranged for v.f.o. input as shown in Fig. 1260.

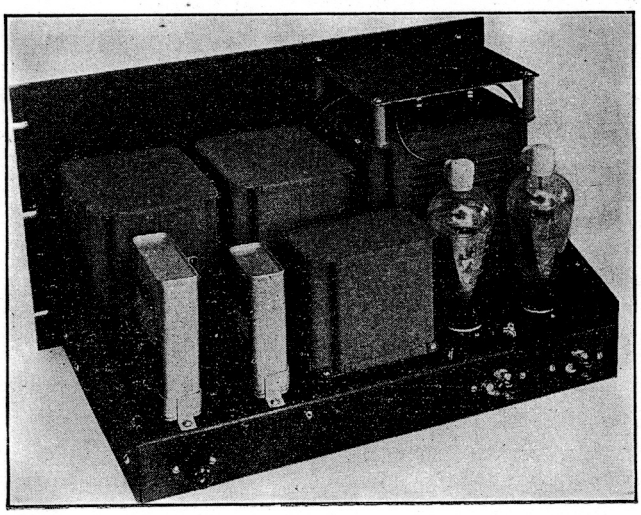

Fig. 1225 — This power supply unit delivers 830, 1060 or 1250 volts at 250 ma. Voltages are selected by taps on the secondary. Ripple is reduced to 0.25 per cent and the regulation is about 10 per cent. The transformer terminal board is covered with a panel mounted on pillars at the four corners. Insulating caps are provided for the tube plate terminals. A Millen safety terminal protects the high-voltage connection. The chassis measures 11 × 17 × 2 inches and the panel size is 10½ × 19 inches. The circuit is the same as that shown in Fig. 1245, the following values being used:
C_1 — 2-μfd. 1500-volt (Aerovox Hyvol).
C_2 — 4-μfd. 1500-volt (Aerovox Hyvol).
L_1 — Input choke, 5-25 henrys, 300 ma., 90 ohms (UTC S34).
L_2 — Smoothing choke, 15 henrys, 300 ma., 90 ohms (UTC S33).
R — 25,000 ohms, 100-watt.
T_{r1} — 1500-1250-1000 volts r.m.s. each side, 300-ma. d.c. (UTC S47).
T_{r2} — 2.5 volts, 10 amperes, 10,000-volt insulation (UTC S57).

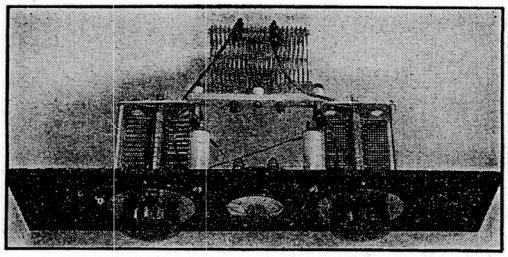

Fig. 1226 — A link-coupled antenna-tuning unit for use with resonant feed systems and medium-power amplifiers. The inductance, with variable link, is mounted on the condenser frames. Clips are provided for changing the number of turns and for switching the condensers from series to parallel. The panel is 5¼ × 19 inches.

¶ Antenna Tuner for Medium Power

The antenna tuner shown in Fig. 1226 will usually be satisfactory for amplifiers operating at plate voltages not in excess of 1250 volts.

The two condensers are mounted from the panel by means of insulating pillars taken from National GS-1 insulators, which are fastened to the end plates with small sections of machine screws from which the heads have been cut. The variable link coil is mounted between the two rear end plates. The size of the coil is varied by short-circuiting turns, using clips which are attached to the condensers with flexible leads. As shown by the circuit diagram, Fig. 1227, the condensers are connected in parallel when the second pair of clips connects each rotor to the stator of the opposite condenser. The feeders are connected to the two large stand-off insulators mounted on the panel.

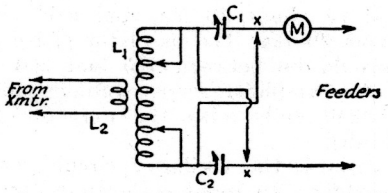

Fig. 1227 — Circuit diagram of the link-coupled antenna-tuning unit for use with medium-power transmitters.
C_1, C_2 — 100-$\mu\mu$fd. variable, 0.07-inch spacing (National TMC-100).
L_1 — 22 turns No. 14, diameter 2¾ inches, length 4 inches (Coto with variable link).
L_2 — 4 turns, rotating inside L_1.
M — R.f. ammeter, 0-2.5-ampere range for medium-power transmitters.

¶ Complete 200-Watt Beam-Tube Transmitter

The units of Figs. 1221, 1225 and 1226 may be combined with that of Fig. 1236 to form a complete transmitter which will occupy a total height in a relay rack of 31½ inches. Plate voltage for the oscillator and screen and bias supply for the HY67 are obtained from the unit of Fig. 1236 (values for 300-volt output), which may be mounted on a 7-inch panel. Plate voltage of 1250 for the HY67 is obtained from the power-supply unit shown in Fig. 1225.

¶ A Simple 200-Watt Transmitter for the 1.75- and 3.5-Mc. Bands

The transmitter shown in Figs. 1229, 1230 and 1231 illustrates how construction may be simplified when operation on only one or two bands is required. In the circuit, shown in Fig. 1228, a 6L6 Tri-tet oscillator is employed to drive a pair of 809s in pushpull. While the circuit is designed primarily for 1.75- and 3.5-Mc. output using 1.75-Mc. crystals, 3.5-Mc. crystals may be used for 3.5-Mc. output by closing S_1 which short-circuits the cathode tank coil.

The two stages are coupled capacitively, and, since no coil changing is required, all coils are permanently mounted. In the oscillator circuit, changing from one band to the other is by the main tank condenser, C_2, which has sufficient range to cover both bands with the same coil.

Parallel plate feed is used in the oscillator so that the amplifier grids may be series fed to eliminate the possibility of low-frequency parasitic oscillations which might be caused by r.f. chokes in both grid and plate circuits. The fixed condenser, C_9, is for the purpose of compensating for the output capacity of the 6L6, to equalize excitation to the grids of the 809s.

To permit easy reading of the low currents in the oscillator plate and amplifier grid circuits, a meter with a scale of 100 ma. is used. When the switch is turned to read amplifier plate current, a shunt, R_7, is connected across the meter to multiply the scale reading by four times. This shunt is wound with No. 24 wire.

Power supply — The oscillator requires a plate voltage of 450, while the amplifier operates from a 1000-volt supply for full c.w. output. A 22½-volt "B" battery is required for fixed bias for the amplifier. The 450-volt unit shown in Fig 1203 is suitable for the oscillator, while the supply pictured in Fig. 1225 will furnish power for the amplifier. The 1000-volt secondary taps should be used.

Tuning — Plate voltage should not be applied to the amplifier until the oscillator has been tuned and the amplifier neutralized. An active 1.75-Mc. crystal will oscillate with C_2 set at any position. Off resonance, the oscillator plate current should run in the neighborhood of 100 ma. Two dips in plate current will be found over the range of the condenser. The one near maximum capacity indicates resonance at the crystal fundamental and the one near minimum capacity indicates the second harmonic of the crystal frequency. At minimum dip the plate current should run between 80 and 90 ma. By switching the meter to the second position, it will be found that grid current indications are obtained at each of these points.

If a 3.5-Mc. crystal is used, S_1 should be closed and only the one point of resonance will be found, near minimum capacity. It will also be noticed that the circuit will oscillate only when the tank circuit is tuned near resonance and that a slight detuning toward the low-capacity side of C_2 will be required for reliable keying.

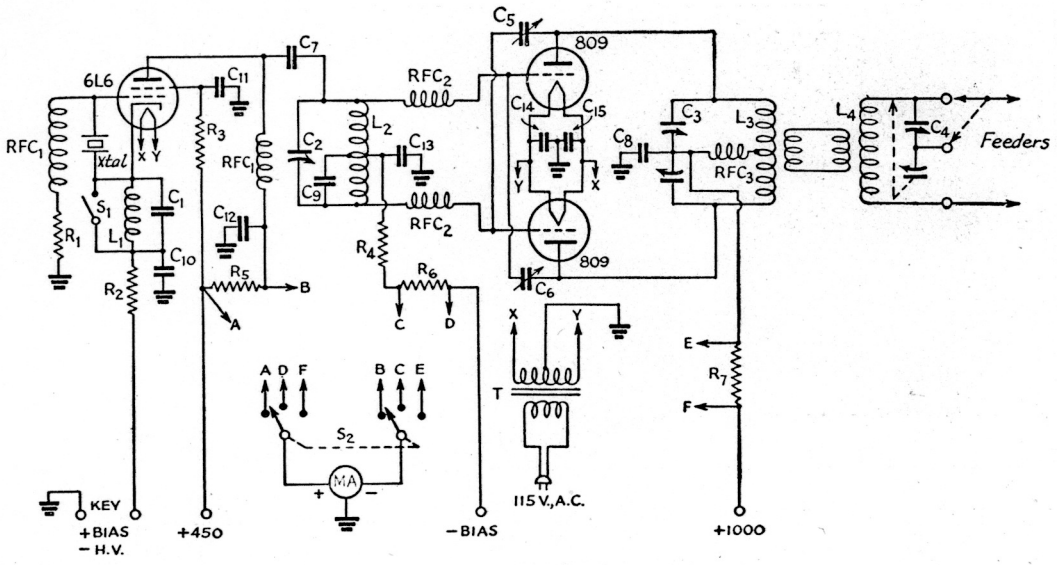

Fig. 1228 — Circuit diagram of the simple 200-watt push-pull 809 transmitter for the 1.75 and 3.5-Mc. bands.

C_1 — 100-$\mu\mu$fd. mica.
C_2 — 250-$\mu\mu$fd. variable (National STH-250).
C_3, C_4 — 200 $\mu\mu$fd. per section. 0.07-inch spacing (Cardwell XT-210 PD).
C_5, C_6 — Neutralizing condensers (Millen 15003).
C_7 — 500-$\mu\mu$fd. mica.
C_8 — 0.001-μfd. mica, 5000-volt rating.
C_9 — 50-$\mu\mu$fd. mica (see text).
C_{10}, C_{11}, C_{12}, C_{13}, C_{14}, C_{15} — 0.01-μfd. paper.
MA — Projection-type milliammeter, 0-100-ma. scale (Triplett Model 324).
R_1 — 50,000 ohms, 1-watt.
R_2 — 200 ohms, 2-watt.
R_3 — 25,000 ohms, 10-watt.
R_4 — 800 ohms, 10-watt.
R_5, R_6 — 25 ohms, 1-watt.
R_7 — Meter-shunting resistance (see text).
RFC_1 — 2.5-mh. r.f. choke.
RFC_2 — V.h.f. parasitic choke, 20 turns No. 20, ¼-inch diameter, close-wound.
RFC_3 — 1-mh. r.f. choke, 300-ma., (National R-300).
S_1 — S.p.s.t. toggle switch.
S_2 — 2-gang 3-circuit high-voltage switch (Mallory 162C).
T — Filament transformer, 6.3 volts, 6 amperes (Kenyon T387).
L_1 — 40 turns No. 24 d.s.c., 1-inch diameter, close-wound.
L_2 — 50 turns, 1¼-inch diameter, 1⅝ in hes long (National AR-80-C, unmounted, no link, 2 turns removed from each end), 50 μhy. inductance.
L_3 — 54 turns No. 16, 2½-inch diameter, 4½ inches long, tapped 10 turns from each end for 3.5 Mc. (B & W) 160TA, unmounted, 80 μhy.
L_4 — Same as L_3, taps adjusted as required.

With C_2 adjusted for maximum grid current at the fundamental, the amplifier should be neutralized by adjusting both neutralizing condensers in small steps, keeping their capacities equal at all times. A check on the neutralizing adjustment may be made by any of the usual methods. One suitable test is with a neon bulb touched to one end of the plate tank coil, which should not glow at any point in the range of the amplifier tank condenser except possibly at minimum capacity. Another test is that of observing the grid-current reading. When the amplifier is completely neutralized, swinging the amplifier tank condenser through its range should cause no change in grid current. When not neutralized, the grid current will show a

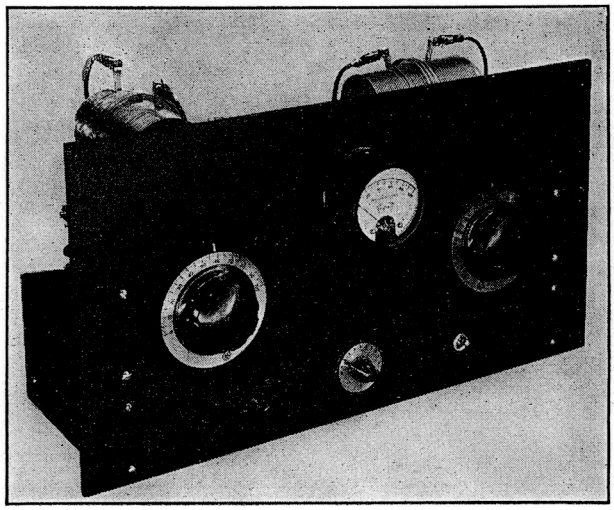

Fig. 1229 — A simple 200-watt transmitter for use on the 160 and 80 meter bands. The two large dials are used for tuning the amplifier and antenna tank circuits. The milliammeter is switched to read plate and grid currents in all circuits. The small control at the lower center is for the oscillator tank circuit, with the meter and cathode-circuit switches at either side. The panel measures 10½ × 19 inches. An antenna tuner is included in the unit. If parallel tuning is required, the free stator of C_4 should be clipped to the free end of L_4 and the feeders connected one to each of the condenser stators. If series tuning is desired, the two stators are clipped together and one feeder clipped to the rotor and one to the coil, as indicated in the circuit diagram. The normal power output on c.w. will be approximately 150 watts. With the plate voltage reduced to 750 for plate modulation, the output will be about 100 watts. The oscillator circuit may be arranged for v.f.o. input, as shown in Fig. 1260.

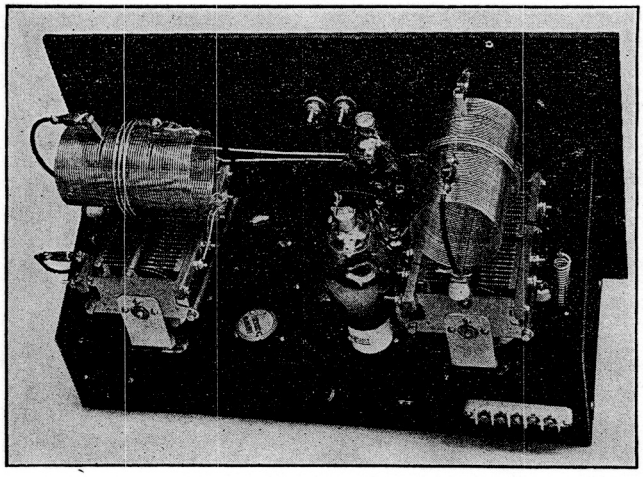

Fig. 1230 — Rear view of the 200-watt two-band transmitter. The antenna tank condenser at the left and the amplifier tank condenser at the right are mounted on metal brackets which are insulated from the chassis with pairs of National FWB polystyrene terminal strips placed at front and back. Strips of the same type are cut in half to form insulating bushings for the meter, which is mounted by its terminal studs. The neutralizing condensers are located between the 809s. The power plug at the lower left is for the filament transformer underneath. The chassis measures 7 × 3 × 17 inches. When shifting to the 3.5-Mc. band, inductance in the amplifier and antenna tank circuits is changed by short-circuiting turns at each end of each coil. Johnson clamp-type coil clips are used at the shorting points as markers and to provide contacts for attaching the shorting clips.

sharp dip when the plate tank condenser is tuned through resonance.

Plate voltage may now be applied to the amplifier. It is advisable to make preliminary adjustments at reduced plate voltage. The voltage may be reduced by connecting a 150- or 200-watt lamp in series with the primary winding of the plate transformer. Minimum amplifier plate current (with the meter in the third position) as the plate tank circuit is tuned will indicate resonance. The value of plate current at the minimum point will depend somewhat upon the setting of the antenna tank condenser. However, by keeping the antenna circuit tuned well away from resonance a minimum reading of somewhat less than 50 ma. should be obtained.

Tests should next be made to make certain that the oscillator will key satisfactorily. If the crystal does not pick up readily, a slight retuning of C_2 should remedy the trouble.

Tuning the transmitter for 80-meter output is then a simple matter of tuning the oscillator to the resonance dip near the minimum of C_2, placing the short-circuiting clips on L_3, and tuning C_3 for resonance. The shift from one band to another should take but a few seconds.

The amplifier may be loaded until the total plate current reaches 200 ma. When loaded, the grid current should not fall below 60 ma.

If the plate of one amplifier tube shows color while the other remains cool, it is an indication that the excitation is unbalanced and calls for adjustment of C_9. If the plate of the tube whose grid is connected to the same end of L_2 as the plate of the 6L6 shows color, the capacity of C_9 should be increased, while color in the other tube would require a reduction in capacity. In any case the value will not be critical within 10 or 20 $\mu\mu$fd., and the value of C_9 specified should be satisfactory in most cases.

¶ Complete Two-Stage 200-Watt Transmitter for the 1.75- and 3.5-Mc. Bands

The transmitter of Fig. 1229 may be combined with the power-supply units of Figs. 1203 and 1225 in a complete unit with the addition of a 22.5-volt battery for bias. If the unit of Fig. 1203 and the bias battery are mounted behind a 7-inch panel, the total rack height required will be 28 inches. The unit of Fig. 1203 supplies power to the oscillator, while plate voltage for the amplifier is obtained from the power supply shown in Fig. 1225.

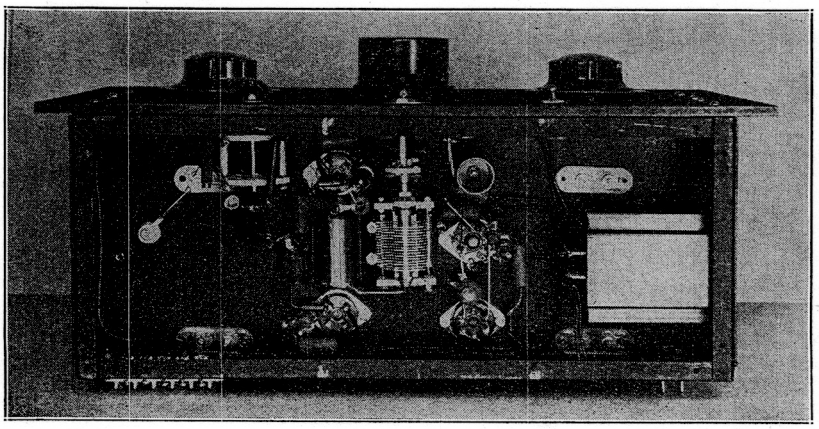

Fig. 1231 — The oscillator tank of the 200-watt two-band transmitter is underneath the chassis, well shielded from the amplifier. The tank coil, L_2, is mounted on a pair of ½-inch standoff insulators between the 809 sockets. Sufficient space is left between the 6L6 and crystal sockets to allow the oscillator tank condenser, C_2, to be mounted at the center of the chassis on a pair of National FWB terminal strips serving as insulators. L_1 is just above the 6L6 socket.

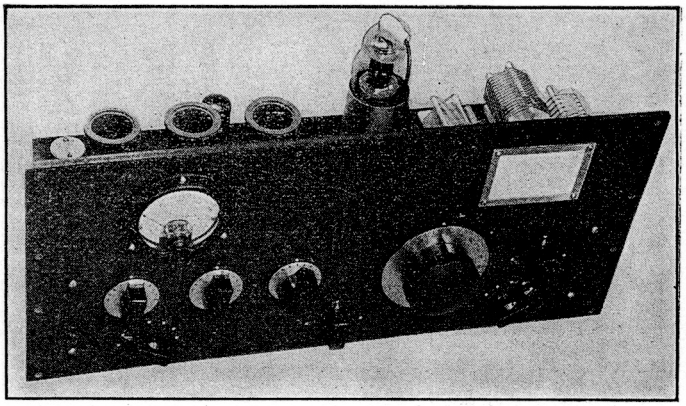

Fig. 1232 — An 807 exciter or low-power transmitter combining the flexibility of plug-in coils with the convenience of band-switching. A band-switching plug-in coil assembly changes tank coils in the 807 plate circuit. Crystal switching and meter switching also are provided. Plate currents for all tubes and screen current for the 807 are read on a 200-ma. meter which can be switched to any circuit. Keying is in the oscillator cathode circuit, for break-in operation. The panel is 8¾ inches high and of standard rack width. The chassis measures 8 x 17 x 2 inches. The unit requires two power supplies, one delivering 250 volts at approximately 75 ma. and the other 750 volts at 100 ma.

¶ A Band-Switching Exciter with 807 Output

The exciter or low-power transmitter pictured in Figs. 1232, 1234 and 1235 is designed for flexibility, being adaptable for use on all bands from 1.75 to 28 Mc., with crystals cut for different bands, and also for quick band changing over three bands. It consists of a 6C5 triode oscillator followed by two triode doubler stages in one tube, a 6N7; by means of a switch, S_2, the output of any of the three stages can be connected to the grid of the final tube, which is an 807 beam tetrode. The circuit diagram is given in Fig. 1233.

The oscillator, first and second doubler plate coils, L_1, L_2 and L_3 respectively, need not be changed for crystals ground for a given band. The switching circuit is so arranged that the grids of unused stages are automatically disconnected from the preceding stage and grounded, so that excitation is not applied to the idle doubler tubes.

Capacity coupling between stages is used throughout. The plates of the first three stages are parallel-fed so that the plate tuning condensers can be mounted directly on the metal chassis. The 6C5, 6N7, and the 807 screen all operate from a 250-volt supply. Series feed is used in the 807 plate circuit, the tank con-

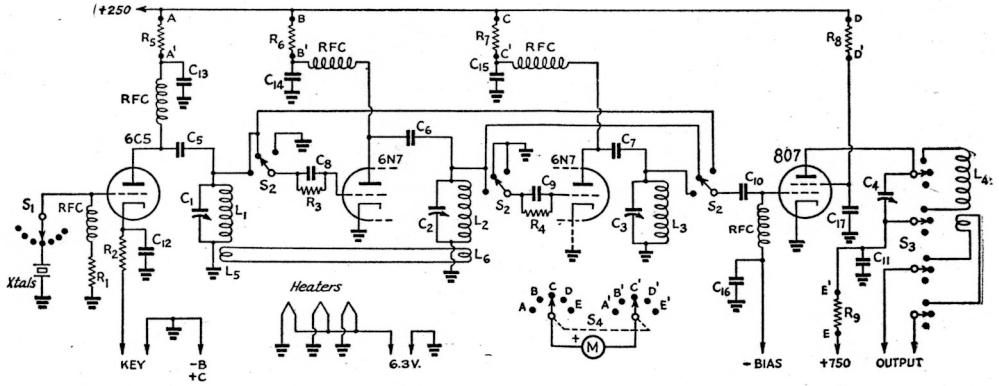

Fig. 1233 — Circuit diagram of the crystal-controlled 807 band-switching exciter or low-power transmitter.

C_1, C_2, C_3 — 100-$\mu\mu$fd. variable (National ST-100).
C_4 — 150-$\mu\mu$fd. variable, 0.05-inch plate spacing (Hammarlund HFB-150-C).
C_5, C_6, C_7 — 0.002-μfd. 500-volt mica.
C_8, C_9, C_{10} — 100-$\mu\mu$fd. 500-volt mica.
C_{11} — 0.002-μfd. 2500-volt mica.
C_{12}–C_{17}, inc. — 0.01-μfd. 600-volt paper.
R_1 — 10,000 ohms, ½-watt.
R_2 — 300 ohms, 1-watt.
R_3, R_4 — 25,000 ohms, ½-watt.
R_5–R_9, inc. — 25 ohms, ½-watt.
RFC — 2.5-mh. r.f. choke.
S_1 — Ceramic wafer switch, 6 or more positions.
S_2 — Three-gang three-position ceramic wafer switch (Yaxley 163C).
S_3 — Band-switch in coil assembly (Coto type 700).
S_4 — Two-gang 6-position (5 used) ceramic wafer switch.
M — 0-200 d.c. milliammeter, bakelite case.

L_1, L_2, L_3 — 1.75 Mc.: 50 turns No. 22 d.s.c. close-wound.
3.5 Mc.: 26 turns No. 18, length 1½ inches.
7 Mc.: 17 turns No. 18, length 1½ inches.
14 Mc.: 8 turns No. 18, length 1½ inches.
28 Mc.: 3 turns No. 18, length 1 inch.
All wound on 1½-inch diameter forms (Hammarlund SWF-4); turns spaced evenly to fill specified winding length.
L_4 — 1.75 Mc. — 50 turns, 1½-inch diameter, 2⅜ inches long, 52 μhys. (Coto CI6160E).
3.5 Mc. — 25 turns, 1½-inch diameter, 1⅝ inches long, 16 μhys. (Coto CI680E).
7 Mc. — 16 turns, 1½-inch diameter, 1⅛ inches long, 5.7 μhys. (Coto CI640E).
14 Mc. — 8 turns, 1½-inch diameter, 1⅝ inches long, 1.5 μhys. (Coto CI620E).
28 Mc. — 4 turns, 1½-inch diameter, 1½ inches long, 0.7 μhys. (Coto CI610E).
L_5, L_6 — One turn at bottom of L_1 and L_2. See text.

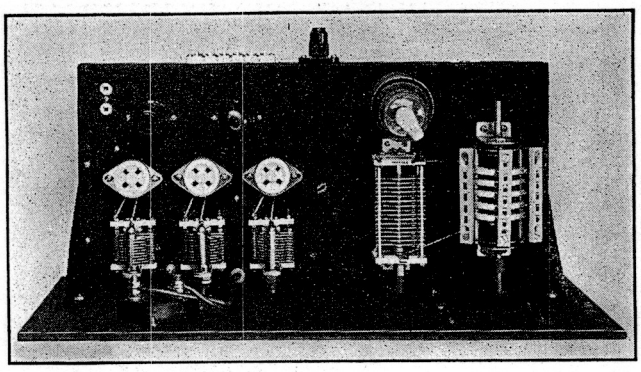

Fig. 1234 — Top view of the band-switching exciter with coils removed. At the left rear are the spare crystal socket, the 6C5 and the 6N7. Directly in front of these are the tuning condensers (mounted directly on the chassis) and the coil sockets (mounted on pillars) for the oscillator and doubler stages. Grouped to the right are the 807, the amplifier tank condenser (which must be insulated from the chassis) and the switch assembly. The "hot" leads from the coils are brought through grommeted holes in the chassis. The amplifier switch assembly should be mounted far enough back from the panel so that the coils will clear the side of the relay rack or cabinet. Leads between the switch and C_4 should be kept as short as possible.

denser being of the type which is insulated from the chassis. Fixed bias of about 75 volts is used on the 807 grid.

Plate currents for all tubes are read by a 200-ma. meter which can be switched to any circuit by means of S_4. Keying is in the oscillator cathode circuit for break-in operation.

Since in normal operation the crystal tank circuit, C_1L_1, is tuned well on the high-frequency side of resonance, there is a tendency for the first doubler section to break into a "tuned-grid tuned-plate" type of oscillation when the key is up; this is prevented by a small amount of inductive neutralization provided by the single-turn coils, L_5 and L_6, wound as closely as possible to the ground end of each tank coil. The 28-Mc. coil does not need such a neutralizing winding, since it is used only in the second doubler stage. L_5 and L_6 should be so connected as to prevent self-oscillation of the first 6N7 section when the key is open; the proper connections should be found by trial.

In the bottom view, Fig. 1235, the meter switch with its shunting resistors is at the left, with the 807 plate by-pass condenser, C_{11}, just above it. The stage switch, S_2, is in the center. R.f. leads to this switch should be kept separated as much as the layout will permit. R.f. junction points are insulated by small ceramic pillars. In this view, the right-hand section of the 6N7 is the first doubler. The rotor contact of the section of S_2 nearest the panel goes to the grid of the first doubler, the middle section to the second-doubler grid, and the third section to the 807 grid.

Figs. 1236 and 1238 show suitable 250- and 750-volt power-supply units for this transmitter. Heater voltage and grid bias are obtained from the 250-volt supply. If desired, both these power units may be assembled on one large chassis.

Tuning — To operate the exciter, coils for consecutively higher-frequency bands are plugged in at L_1, L_2 and L_3; only five are necessary for operation with any crystal from 1.75 to 7 Mc. and for output from 1.75 to 28 Mc. For example, with 3.5-Mc. crystals, the 3.5-, 7- and 14-Mc. coils would be plugged in at L_1, L_2 and L_3 respectively. For 1.75-Mc. crystals, the 1.75-, 3.5- and 7-Mc. coils would be used, and so on. The plate coils for the 807 should cover the same bands as the low-level coils.

Preliminary tuning should be done with the plate voltage for the 807 disconnected. Set S_2 so that all tubes are in use. Switch the milliammeter to the oscillator circuit and close the key. Rotate C_1 for the dip in plate current which indicates oscillation. The non-oscillating plate current should be between 20 and 25 ma., dropping to 15 or 20 when oscillating. Switch the meter to the doubler plate and adjust C_2 to minimum plate current, or resonance. The off-resonance plate current should be about 30 ma. or more and the reading should be between 10 and 15 at resonance. Check the second-doubler plate current and tuning similarly; the off-resonance plate current should again be around 30 ma., dropping to 15 or 20 at resonance. At this point the 807 screen current should be measured; with too much excitation it will be considerably higher than the rated

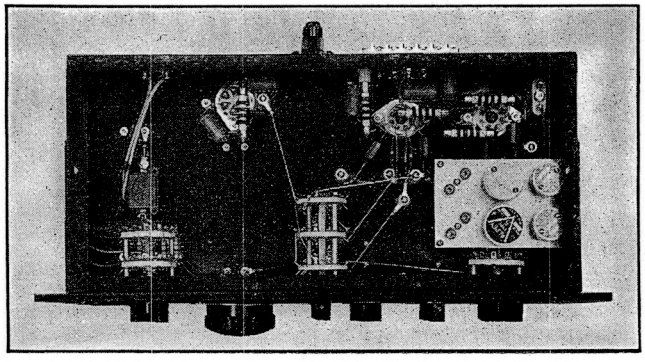

Fig. 1235 — Bottom view of the band-switching exciter, showing the meter switch at the left, the band-switch in the center and the crystal switch at the right. The multiple crystal mounting, which holds six crystals, is made of a 3 × 4½-inch aluminum plate fitted with Amphenol crystal sockets, the assembly being elevated from the chassis by metal pillars. A seventh socket is provided on top of the chassis for a spare crystal or for e.c.o. input. The 750-volt lead is brought through a Millen safety terminal, and all other power connections come to a terminal strip at the rear which has barriers between the terminals to prevent accidental contact. All grounds are made directly to the 8 × 17 × 2-inch chassis.

value (about 12 ma.) and the excitation should not be kept on for more than a second or two.

Next, the plate voltage may be applied to the 807. The amplifier should not be operated without load for more than a few moments at a time, because under these conditions the screen dissipation is excessive. Use a 70-ohm dummy antenna or a 60-watt lamp connected to the output link. The three bands may be checked in order by appropriate switching of S_2 and S_3. With the 807 fully loaded, check the screen current to make sure it does not exceed 10 or 12 ma. If it is too high, reduce the excitation by detuning the crystal oscillator until it reaches the proper value. The 807 grid current may be measured with a lower-range milliammeter connected in series with the bias source, if desired. Maximum output will be secured with a grid current of about 3 or 4 milliamperes, a value which also will give about rated screen current. The screen current is, in fact, a very good indicator of excitation. The 807 should show no tendency to oscillate by itself when the key is open.

The current to each section of the 6N7 should be 20 ma. with the key open (no excitation). If the two currents are not the same or show changes when C_2 and C_1 are tuned with key open, the first doubler may be acting as a t.p.t.g. oscillator, as previously mentioned, and the neutralizing circuit should be checked. Do not use more than 250 volts for the low-voltage supply, as higher values will cause excessive 807 screen dissipation. Care also should be taken to avoid excessive excitation, for the same reason. In normal operation, with C_1 detuned to reduce excitation to the proper value, the doubler plate currents will show little change between resonance and off-resonance tuning.

With maximum input to the 807 plate (75 watts) the output is approximately 50 watts on all bands except 28 Mc., where greater circuit losses decrease it to about 40 watts. The excitation is more than ample on all bands.

The oscillator circuit may be arranged for v.f.o. input as in Fig. 1259.

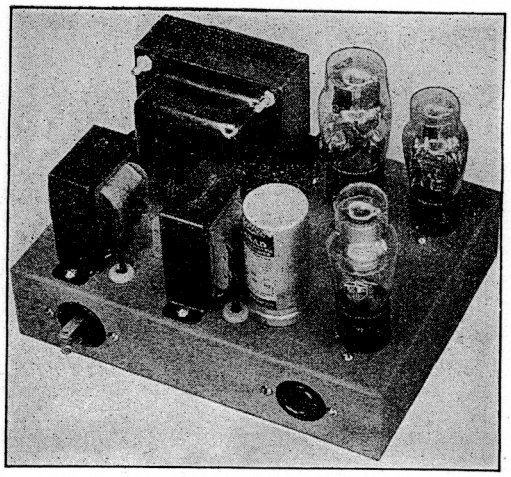

Fig. 1236 — A combination power-supply unit delivering 250 or 300 volts for exciter plate-supply and 75 volts of fixed bias. The unit is designed especially to work with the band-switching exciter of Fig. 1232 or the transmitter of Fig. 1221. If desired, the components may be combined with the components for a high-voltage plate-supply on a single chassis. The circuit diagram of the combination unit is shown in Fig. 1237.

A Combination Low-Voltage Plate or Screen Supply and Fixed-Bias Pack

Fig. 1236 illustrates a combination pack which will deliver 250 or 300 volts, 75 ma., for supplying plate voltage for receiving-tube exciter stages as well as screen and fixed-bias voltage for a beam-tube driver stage.

The circuit diagram is shown in Fig. 1237-A. In addition to the usual full-wave rectifier circuit employing a type 80 tube, a 1V half-wave rectifier is also connected across one-half of the transformer secondary in reverse direction to provide a negative biasing voltage which

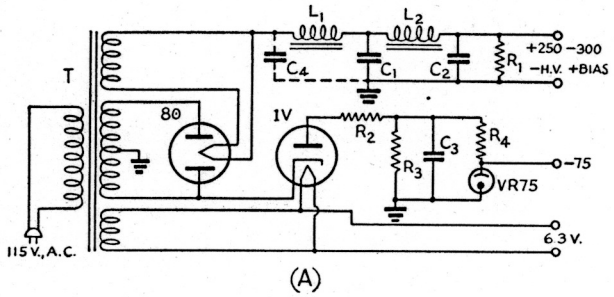

(A)

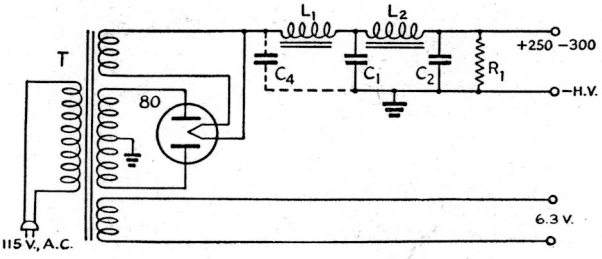

(B)

Fig. 1237 — Circuit diagram of the combination plate, screen and grid-bias power supply pictured in Fig. 1236.

C_1, C_2 — Sections of 8-μfd. 450-volt dual electrolytic.
C_3 — 8-μfd. 450-volt paper.
C_4 — Same as C_3 (used only for 300-volt output).
L_1, L_2 — 6 henry, 80 ma., 138 ohms (Thordarson T-57C51).
R_1 — 20,000 ohms, 10-watt.
R_2 — 20,000 ohms, 2-watt.
R_3 — 25,000 ohms, 2-watt.
R_4 — 15,000 ohms, 2-watt.
T — 300 volts r.m.s., each side of center-tap, 90 ma.; 5 volts, 3 amperes; 6.3 volts, 3.5 amperes (Thordarson T-13R13).

If desired, the bias branch may be omitted as shown at B. All values remain as above.

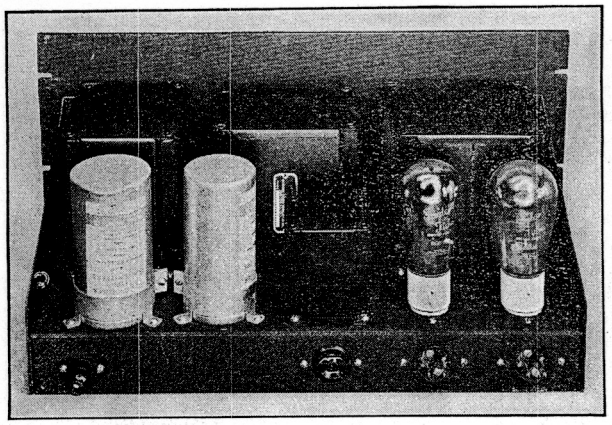

Fig. 1239 — This power-supply unit delivers either 620 or 780 volts at a full-load current of 260 ma. with 0.4 per cent ripple and regulation of 22 per cent. Voltage is changed by a tap on the plate-transformer primary winding. The filter chokes are at the left and the plate power transformer at the right on the panel side of the chassis. The can-type 1000-volt filter condensers are at the left in front and the rectifier tubes at the right, with the rectifier filament transformer in between. All exposed component terminals are underneath the chassis. The panel is 8¾×19×3 inches. The 2.5-volt 10-ampere rectifier filament transformer should have 10,000-volt insulation. A 6.3-volt filament transformer is included for heating the filaments of r.f. tubes. This transformer is mounted underneath the chassis; its output terminals are brought out to a standard a.c. receptacle in the rear. The circuit diagram is shown in Fig. 1238.

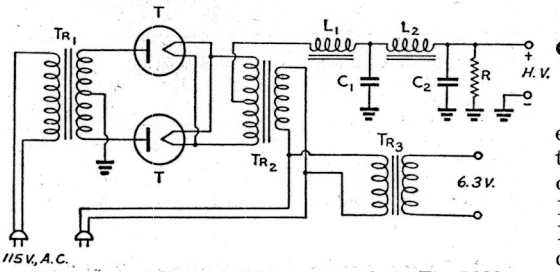

Fig. 1238 — Circuit of the power supply in Fig. 1239.
C1 — 2-μfd. 1000-volt paper (Sprague OT21).
C2 — 4-μfd. 1000-volt paper (Sprague OT41).
L1 — Input choke, 6–19 henrys, 300 ma., 125 ohms (Kenyon T-510).
L2 — Smoothing choke, 11 henrys, 300 ma., 125 ohms (Kenyon T-166).
R — 20,000 ohms, 50-watt.
T — Type 866 Jr. rectifier.
Tr1 — 925 or 740 volts r.m.s. each side of center-tap, 300 ma. d.c. (Kenyon T-656).
Tr2 — 2.5 volts, 10 amperes, 2000-volt insulation (Kenyon T-352).
Tr3 — 6.3-volt 3-ampere filament transformer.

is held constant at 75 volts by the VR75–30 regulator tube. With the dropping resistor shown, the regulator tube will pass a grid current of 25 ma. without overload. The 1V rectifier is indirectly heated, so that it may be operated from the same 6.3-volt winding provided to supply the r.f. tubes in the transmitter.

The output voltage at a normal load current of about 75 ma. can be increased from 250 to about 300 by the addition of the input condenser, C_4, the connections for which are shown in dotted lines.

If the bias section is not needed, plate or screen voltage may be obtained with the simplified circuit shown in Fig. 1237-B, eliminating the bias section.

Complete 75-Watt Multi-Band Transmitter

If it is desired to use the band-switching 807 exciter unit shown in Fig. 1232 as a complete transmitter feeding the antenna, it may be combined with the power-supply units of Figs. 1236 and 1239 and the antenna tuner of Fig. 1216 (using the large condensers) to make a complete unit. The combination power supply of Fig. 1236 will supply plate voltage for the oscillator and doubler stages, as well as screen and bias voltages for the 807. Filament supply also is obtainable from this unit. Plate voltage for the 807 is furnished by the power supply unit of Fig. 1239. The combined height of all units (assuming the unit of Fig. 1236 to be mounted on a 7-inch panel) will be 29¾ inches. The filament transformer shown in the diagram of Fig. 1238 will not be required.

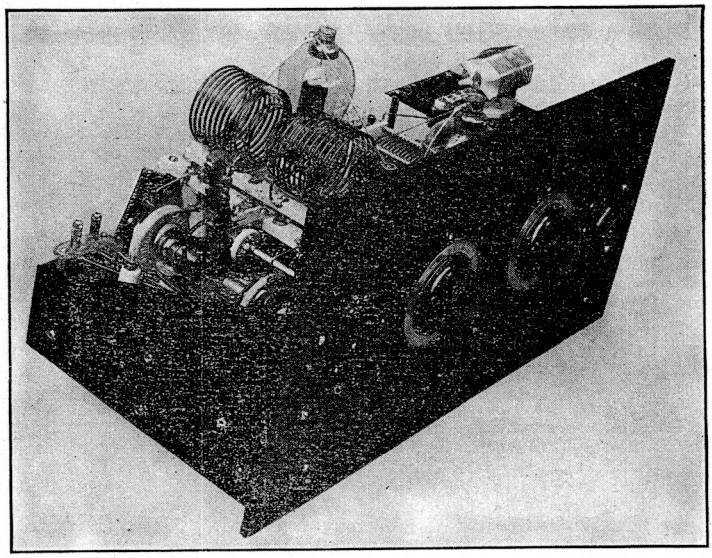

Fig. 1240 — A 450-watt band-switching amplifier. The panel size is 10½ × 19 inches. The large dials on the panel control the plate and grid tank condensers. The uppermost of the two small knobs to the left is for adjusting the variable-link output coupling, while the lower knob is for the plate band-switch. The grid band-switch knob is to the right. All controls should be well insulated.

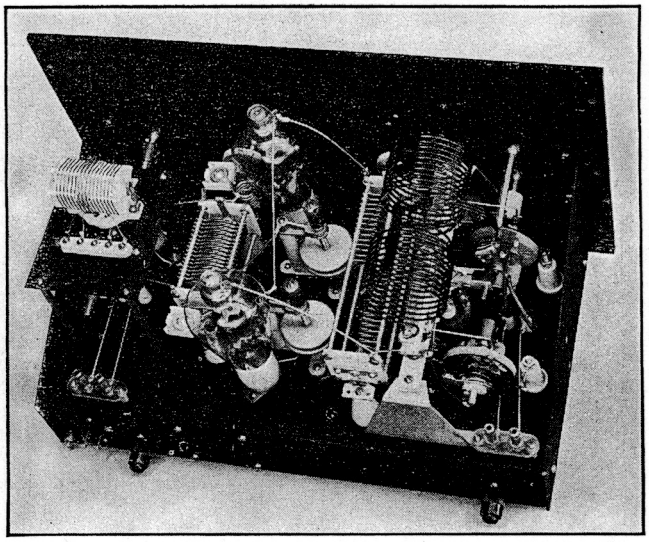

Fig. 1241 — Rear view of the 450-watt amplifier. The plate tank-coil jack bar at the right is mounted on brackets 2⅞ inches high so that the variable-link shaft will clear the switches. These are mounted on 1-inch cone insulators after their brackets have been revamped to bring the shafts 1½ inches above the chassis. The units are spaced so as to be central with the jack-bar terminals. The shafts are coupled with a section of ⅜-inch bakelite shaft fitted with brass reducing couplings at each end. The two feed-through insulators are for connections to the padder-condenser jack base underneath. The tank condenser is mounted on 1½-inch cone insulators. The plate r.f. choke and a feed-through insulator for high-voltage line are placed beneath the jack bar. The grid tank condenser is mounted to bring its shaft even with that of the plate condenser. The grid switch is mounted on insulators to balance the plate switch. The grid coil mounting is elevated over the switch. The tubes and neutralizing condensers are placed symmetrically between the two tank circuits.

A 450-Watt Band-Switching Amplifier

The photographs of Figs. 1240, 1241, 1243 and 1244 illustrate a 450-watt push-pull band-switching amplifier capable of handling a power input of 450 watts at 1500 volts for c.w. operation or 375 watts with plate modulation. While the type T55 is shown, any of the triodes in the 1000- or 1500-volt class, such as the 809, T40, HY40, RK35, UH50, 808, 812, RK51 or 35T, may be used in a similar arrangement.

The circuit is shown in Fig. 1242. Band-switching is accomplished by short-circuiting

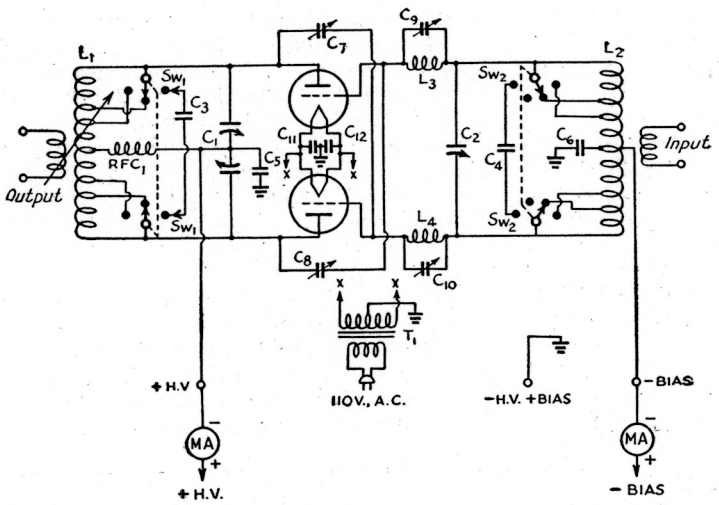

Fig. 1242 — Circuit diagram of the 450-watt amplifier.

C_1 — 100 $\mu\mu$fd. per section, 0.07-inch plate spacing (Hammarlund HFBD-100-E).

C_2 — 150 $\mu\mu$fd., 0.05-inch plate spacing (Hammarlund HFB-150-C).

C_3 — 50-$\mu\mu$fd. fixed air padder for 1.75 Mc., spacing 0.17 inch or greater (Cardwell JCO-50-OS).

C_4 — 15-$\mu\mu$fd. padder for 1.75 Mc., 0.05-inch spacing (see text) (Hammarlund HFA-15-E).

C_5 — 0.001-μfd. 7500-volt mica (Aerovox 1623).

C_6 — 0.01-μfd. paper.

C_7, C_8 — Neutralizing condenser (National NC800).

C_9, C_{10} — Isolantite mica trimmer, 20–100-$\mu\mu$fd. (Mallory CTX954).

C_{11}, C_{12} — 0.01-μfd. paper.

RFC_1 — 1-mh. r.f. choke, 600-ma. (National R154).

SW_1 — Ganged sections of Ohmite ham-band switch (3-position).

SW_2 — Ganged sections of Mallory ham-band switch (4-position) (type 162C).

T_1 — 7.5-volt 6-ampere filament transformer (Thordarson T-19F94).

L_1 — For 1.75-, 3.5- and 7-Mc. bands — 60 turns No. 16, 5⅜ inches long, 2½-inch diameter, tapped at the 7th and 16th turn each side of center (B & W TVH-160) (90 μhy., tapped each side of center at 7/30 and 8/15 of total turns in each half).

For 3.5-, 7- and 14-Mc. bands — 38 turns No. 14, 5¼ inches long, 2½-inch diameter, tapped at the 4th and 9th turn each side of center (B & W TVH-80) (35 μhy., tapped each side of center at 2/19 and 9/38 of total turns in each half).

For 7-, 14- and 28-Mc. bands — 24 turns No. 12, 5¼ inches long, 2½-inch diameter, tapped at 2nd and 5th turns each side of center (see text for alterations) B & W TVH-40) 13 μhy., tapped each side of center at approximately 1/6 and 5½ of total turns in each half.

L_2 — For 1.57-, 3.5- and 7-Mc. bands — 52 turns, 2 inches long. 1½ inch diameter, tapped at 9th and 17th turns each side of center. (Coto CS-160C) (56 μhy. tapped each side of center at 9/26 and 17/26 of total turns in each half).

For 3.5-, 7- and 14-Mc. bands — 26 turns, 1½ inches long, 1½-inch diameter, tapped at 5th and 9th turns from each side of center. (Coto CS80C) (17 μhy., tapped each side of center at 5/13 and 9/13 of total turns in each half).

For 7-, 14- and 28-Mc. bands — 16 turns 1⅞ inches long, 1½-inch diameter, tapped at 1st and 3rd turns each side of center. (Coto CS40C) (5 μhy., tapped each side of center at ⅛ and ⅜ of total turns in each half).

L_3, L_4 — 8 turns No. 12, ½-inch inside diameter, 1⅛ inches long.

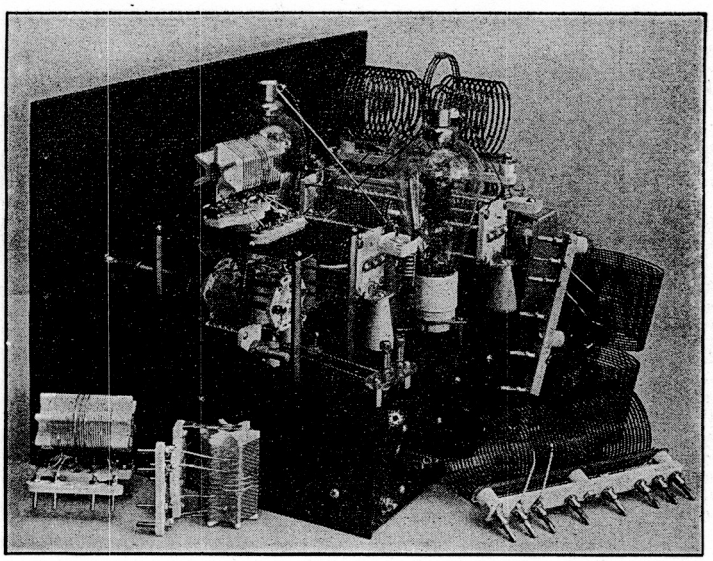

Fig. 1243 — A view of the grid-circuit end of the band-switching push-pull amplifier showing the coil-switching arrangement and the 1.75-Mc. padder.

turns of both plate and grid coils by means of tap switches. Any three adjacent bands may be covered in this manner. By plugging in another pair of coils, a second set of three adjacent bands may be covered. Thus the 1.75-, 3.5- and 7-Mc. bands may be covered with one pair of coils, the 3.5-, 7- and 14-Mc. bands with another pair, and the 7-, 14- and 28-Mc. bands with a third pair.

A plug-in fixed air condenser is required for the plate circuit for the 1.75-Mc. band. The plug-in jack base is mounted under the chassis and is wired to the lowest-frequency switch points, so that the condenser is automatically connected across the coil when the switch is turned for the 1.75-Mc. band. When the coil covering this band is not used, the fixed condenser should be removed; it may be omitted entirely if operation in this band is not desired. The grid circuit likewise requires padding at 1.75 Mc., but here a 15-$\mu\mu$fd. condenser may be connected permanently across the fourth set of switch contacts, which are not used for other bands. C_9L_3 and $C_{10}L_4$ are parasitic traps to eliminate v.h.f. parasitic oscillations. Fixed-link coupling is used at the input, with variable-link output coupling.

Coils — The plate-tank coils listed under the circuit diagram are of a special series designed primarily for use with a multi-section tank condenser. They are provided with four extra plugs which are used, in this case, for the short-circuiting taps. The coil covering 7, 14 and 28 Mc. requires slight alteration, however. Two turns on each side of center are cut free from the supporting strips and left self-supporting; otherwise, the coil heating which usually occurs at 28 Mc. may be sufficient to ruin the base strip. At the same time, these two turns on each side should be reduced in diameter to 1⅞ inches. This may be done quite readily by unsoldering the central ends, twisting the turns to the smaller diameter, and cutting off the excess wire. While the lower-frequency taps may be soldered, it is advisable to use clamps on the wire for the 28-Mc. taps. Johnson coil clips are suitable for this purpose.

Since grid coils are unobtainable with sufficient pins in the mounting, the taps for the grid coils are brought out to a five-prong Millen coil-mounting bar (Type 40205). A plug-in socket for the bar is sub-mounted in back of the coil socket.

Wiring — All of the wiring, excepting the power wiring underneath the chassis, is done with No. 14 tinned bus wire. Wherever possible, connections are made with short, straight pieces of wire running directly from point to point. Of most importance are the leads to the

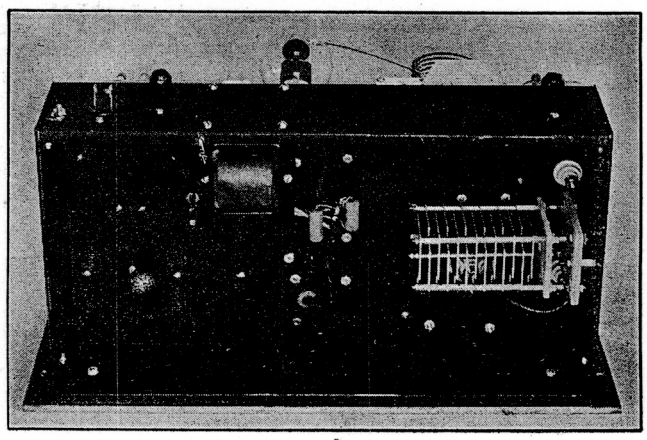

Fig. 1244 — Bottom view of the 450-watt band-switching amplifier. The chassis measures 10 × 17 × 3 inches. The plug-in air padding condenser for 1.75 Mc. is mounted so that it is an equal distance between top and bottom of the chassis. Filament by-pass condensers are soldered to the terminals of a fiber lug strip to which the filament transformer terminals are anchored. Millen safety terminals are used for bias and high-voltage output connections. A suitable 1500-volt plate-power unit for use with this amplifier is shown in Fig. 1246, the circuit diagram for which appears in Fig. 1245. The circuit diagram of a simple bias pack is shown in Fig. 1248. If this bias pack is used, the VR75-30 and the resistance R_1 should be omitted and R_2 and R_3 made approximately 4000 ohms each for T55s. The two power-supply units may be combined on a single chassis.

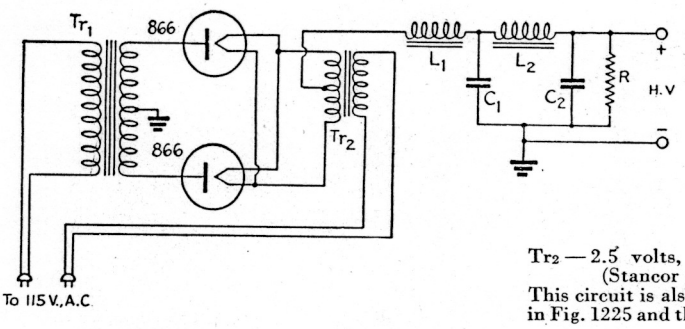

Fig. 1245 — Circuit diagram of the 1500-volt 425-ma. plate power supply for the band-switching amplifier.
C_1, C_2 — 4-μfd. 2000-volt paper (C-D TJU20040).
L_1 — 5–20 henrys, 500 ma., 75 ohms (Stancor C1405).
L_2 — 8 henrys, 500 ma., 75 ohms (Stancor C1415).
R — 20,000 ohms, 150-watt.
Tr_1 — 1820–1520-volts r.m.s. each side of center-tap, 500-ma. d.c. (Stancor type P6157).
Tr_2 — 2.5 volts, 10 amperes, 10,000-volt insulation (Stancor type P3025).
This circuit is also used for the 1250-volt supply shown in Fig. 1225 and the 2500-volt supply shown in Fig. 1285.

tube grids and plates. The leads to the tank condensers and those to the neutralizing condensers must be kept entirely separate; at no point should these leads be common. This practice helps in the prevention of parasitic oscillations. The grid by-pass condenser is mounted close to the grid-coil socket.

Fig. 1242 shows how d.c. milliammeters of suitable ranges may be connected for reading the grid and plate currents. These are not included in the unit, but may be mounted in a separate meter panel constructed as shown in Fig. 1294. The grid-current meter should have a 100 ma. scale, while the plate-current meter should have a range of 500 ma.

Tuning — Any one of the r.f. units shown in Figs. 1232, 1265 or 1276 will furnish sufficient excitation for this amplifier, the band-switching exciter of Fig. 1232 being an excellent companion unit.

Before excitation is applied, the two parasitic-trap condensers, C_9 and C_{10}, should be set at maximum capacity. With excitation applied and plate voltage off, grid current to the amplifier should run between 60 and 90 ma. Make certain that the coil switches are set at the appropriate points.

As the next step the amplifier may be neutralized, using the grid-current meter as a neutralizing indicator.

The amplifier should now be tested for parasitic oscillation. The bias should be reduced to a point which will allow a plate current of 100 ma. or so to flow without excitation. This may be done by moving the biasing tap of the amplifier down toward the positive terminal of the bias supply. It is advisable to lower the plate voltage for this test, either by inserting a resistance of about 2500 ohms in series with the plate-voltage source or by inserting a 200-watt lamp in series with the primary winding of the plate transformer. The grid tank condensers should be set at various points while the plate tank condenser is swung through its range. The plate current should remain perfectly stationary while this is done. If a point is found where a sudden change in plate current takes place, C_9 and C_{10} should be adjusted, bit by bit, until the variation in plate current disappears. C_9 and C_{10} should be as close to maximum capacity as it is possible to set them and yet eliminate the parasitic oscillation.

Normal biasing voltage may now be replaced and the amplifier tuned up and loaded. For c.w. operation, the output should exceed 300 watts when operated at the maximum rated input of 1500 volts, 300 ma. With plate modulation, the plate current should be reduced to 250 ma. and the output should exceed 250 watts. The amplifier will operate satisfactorily when the grid current is 40 to 70 ma. with the plate circuit loaded. The maximum rating of 80 ma. for the two tubes should not be exceeded.

Reference should be made to the vacuum-tube tables of Chapter Twenty-One for data on the operation of other type of tubes.

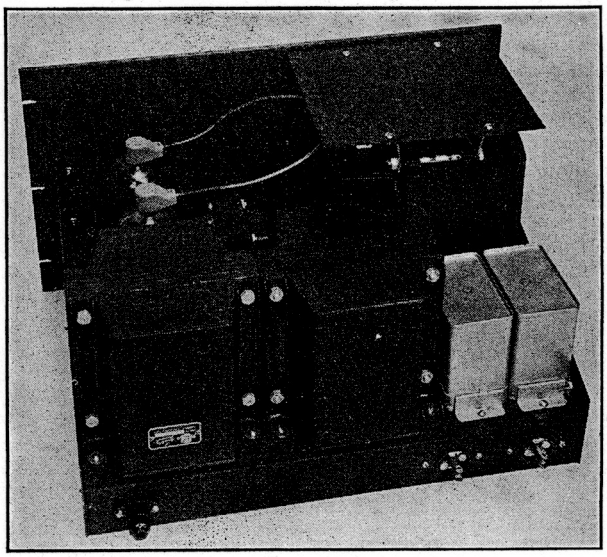

Fig. 1246 — This power supply delivers 1500 or 1250 volts at a full-load current of 425 ma., with 0.25 per cent ripple and regulation of 10 per cent. Voltages are selected by taps on the transformer secondary. The secondary terminal board is covered with a section of steel panel supported by brackets fastened underneath the core clamps and insulating caps are provided for the tube plate terminals. A special safety terminal (Millen) is used for the positive high-voltage connection. The panel is 10½ × 19 inches and the chassis size is 13 × 17 × 2 inches. The circuit is shown in Fig. 1245.

A Simple Combination Bias Supply

Fig. 1248 shows the circuit diagram of the simple transformerless bias unit, pictured in Fig. 1247, which may be used to supply cut-off bias voltages up to 100 volts or so. Through grid-leak action it will also provide the additional operating bias voltage required, if the resistor values are correctly proportioned. The circuit also includes a second branch, consisting of R_1 and a VR75-30 voltage-regulator tube. This branch may not be required in all cases, but will be found convenient in many applications for providing fixed cut-off or protective bias for a low-power stage independent of the main output voltage.

Adjustment — The voltage-divider resistances, R_2 and R_3, are combined in a single resistor with two sliding taps. One of these taps alters the total resistance by short-circuiting a portion of the resistance at the negative end, while the other adjusts the cut-off voltage. The method of determining the values of resistance in each section is as follows:

The section R_2 is adjusted to equal the recommended grid-leak resistance for the tube or tubes in use. The value of resistance between the biasing tap and the short-circuiting tap is determined by the following formula:

$$R_3 = \frac{160 - E_{co}}{E_{co}} \times R_2,$$

where E_{co} is the voltage required for plate-current cut-off. This value may be determined to a close approximation for triodes by dividing the plate voltage by the amplification factor of the tube. No extra grid leak should be used in the stage being supplied by the pack.

The resistance in each section should be first set at the values determined by the formula. The biased amplifier should then be turned on, without excitation. If the plate current is not cut off, or reduced to a safe value, the biasing tap should be moved upward in the negative direction. With the amplifier in operation with rated grid current, the biasing voltage should be measured. If it is higher than that recommended in the tube operating tables, *both* the biasing tap and the short-circuiting tap on the upper section should be moved bit by bit toward the positive end until the correct operating bias is obtained. A final adjustment may now be necessary to again arrive at a cut-off voltage without excitation.

Fig. 1247 shows the components assembled separately on a small chassis. They may, however, be combined with plate-supply components on a single chassis, since little additional space will be required.

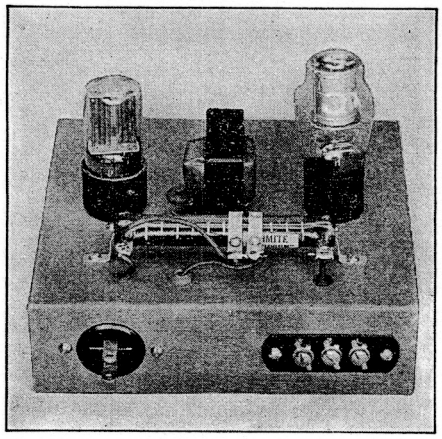

Fig. 1247 — A transformerless combination bias supply suitable for supplying bias for r.f. stages requiring 125 volts or less for cut off. A second branch, controlled by a VR75-30 regulator tube, provides 75 volts fixed bias for a second stage whose grid current does not exceed 20 ma. The unit above is constructed on a 7 × 7-inch chassis, although the components may easily be fitted into any spare space on another power-supply chassis. The regulated VR-tube branch may be omitted if not required. The circuit diagram is shown in Fig. 1248.

It will be noticed in the circuit diagram that only one wire is shown connected to the power plug. The return connection for circuit is made through an actual ground connection to the chassis, to prevent possible short-circuit of the 115-volt line should the power plug happen to be incorrectly polarized when inserted.

A Wide-Range Antenna Coupler

The photograph of Fig. 1249 shows the construction of a wide-range antenna coupler. Diagrams of the various circuit combinations are given in Fig. 1250.

A separate coil is used for each band, and the desired connections for series or parallel tuning with high or low C, or for low-impedance output with high or low C, are automatically made when the coil is plugged in. Coil connections to the pins for various circuit arrangements are shown in Fig. 1250.

The tuning condenser specified, using a set of standard plug-in transmitting coils, should cover practically all coupling conditions likely to be encountered.

Because the switching connections require the use of the central pin, a slight alteration in the B & W unit is required. The link mounting

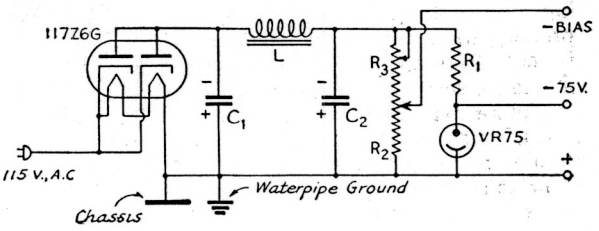

Fig. 1248 — Circuit diagram of the transformerless combination grid-bias supply with voltage-regulated output shown in Fig. 1247.
C_1, C_2 — 16-μfd. 450-volt electrolytic.
L — 60-ma. replacement filter choke.
R_1 — 7500 ohms, 10-watt.
$R_2 + R_3$ — 15,000-ohm 50-watt wire-wound, with two sliders.
See text for details of adjustment and operation.

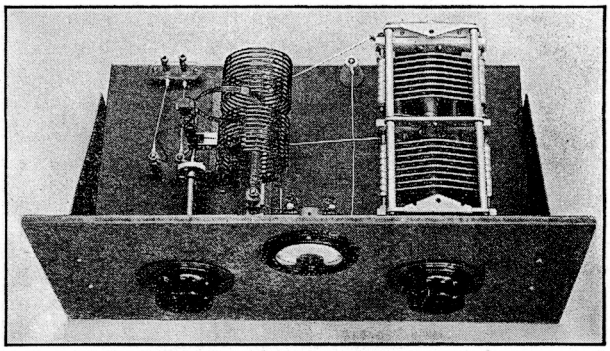

Fig. 1249 — Wide-range antenna coupler. The unit is assembled on a metal chassis measuring 10 × 17 × 2 inches, with a panel 8¾ × 19 inches in size. The variable condenser is a split-stator unit having a capacity of 200 μμfd. per section and 0.07-inch plate spacing (Johnson 200ED30). The plug-in coils are the B & W TVL series. The r.f. ammeter has a 4-ampere scale. If desired, the coils may be wound with fixed links on standard transmitting ceramic forms. The links will have to be provided with flexible leads which can be plugged into a pair of jack-top insulators mounted near the coil jack strip, unless a special mounting is made providing for the seven plug-in connections required.

should be removed from the jack bar and an extra jack placed in the central hole thus provided. The link assembly should then be mounted on a 2-inch cone insulator to one side of the jack bar. On each coil, the central nut must be removed and a Johnson tapped plug, similar to those furnished with the coils, substituted. An extension shaft may then be fitted on the link shaft and a control brought out to a knob on the panel.

The split-stator tank condenser is mounted with angle brackets on four 1-inch cone-type insulators, and an insulated flexible coupling is provided for the shaft.

If desired, the coils may be wound with fixed links on transmitting ceramic forms. The links should be provided with flexible leads which can be plugged into a pair of jack-top insulators mounted near the coil jack strip, unless a special mounting is made providing for seven connections.

The unit as described should be satisfactory for transmitters operating at a plate voltage of not more than 1500 with modulation. For higher voltages, a tank condenser with larger spacing should be used.

Complete 450-Watt Band-Switching Transmitter

The various units shown in Figs. 1232 through 1250, assembled together, form a complete high-power band-switching transmitter.

Heater, low-voltage plate and the 807 screen-voltage supply for the exciter may be obtained from the simplified 250-volt pack of Fig. 1237-B, while plate voltage for the 807 is furnished by the unit of Fig. 1239. Bias voltages for both amplifier and exciter are obtainable from the unit of Fig. 1247, while amplifier plate voltage is furnished by the unit of Fig. 1246. The units of Figs. 1237-B and 1247 may be combined in a single unit with a 7-inch panel. The addition of a 5¼-inch panel for the amplifier grid and plate meters and the antenna tuner of Fig. 1249 completes the transmitter.

The most logical arrangement for the units, from top to bottom, is as follows: (1) antenna tuner, (2) final amplifier, (3) meter panel, (4) exciter, (5) low-voltage and bias supplies, (6) 750-volt supply, (7) high-voltage supply. The combined height of these units is 59½ inches.

Information on a control circuit for such a transmitter will be found in Fig. 1296.

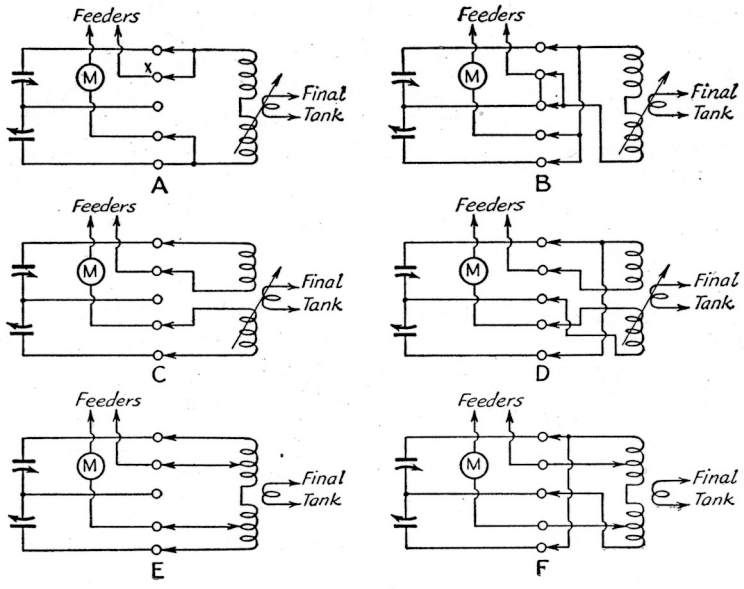

Fig. 1250 — Circuit diagram of the wide-range antenna coupler for use with the band-switching amplifier. A — Parallel tuning, low *C*. B — Parallel tuning, high *C*. C — Series tuning, low *C*. D — Series tuning, high *C*. E — Parallel tank, low-impedance output, low *C*. F — Parallel tank, low-impedance output, high *C*. For single-wire matched-impedance feeders, the arrangements of E or F would be used with a single tap instead of the double tap shown. For simple voltage-fed antennas, the arrangement of A would be used with the end of the antenna connected at "X." After the inductance required for each of the various bands has been determined experimentally, the connections to the coils can be made permanent. Then it will be necessary merely to plug in the right coil for each band, tune the condenser for resonance, and adjust the link for loading,

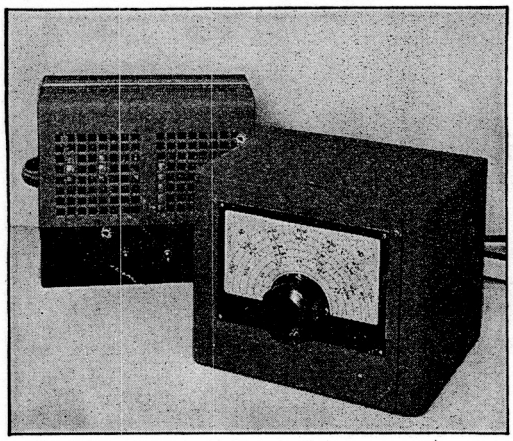

Fig. 1251 — The variable-frequency exciter is enclosed in an 8 × 8 × 10-inch Parmetal cabinet. The dial is the National type ACN, suitable for calibrating. The voltage-regulated power supply is mounted in an amplifier-foundation case with a 5 × 3 × 10-inch chassis.

A Variable-Frequency Exciter

The photographs of Figs. 1251, 1254 and 1256 illustrate the construction of a variable-frequency unit which is designed to take the place of the crystal as a frequency control in most of the common forms of crystal-oscillator circuits. The power output of the unit is approximately one and one-half watts, which is sufficient for this purpose, or for driving an 807. By means of plug-in coils, output at any frequency in the 1.75-, 3.5-, or 7-Mc. bands may be obtained.

Referring to the circuit diagram of Fig. 1252, a 6F6 is used in the e.c.o. circuit. Since the buffer stage provides adequate isolation, the use of a well-screened tube in the oscillator circuit is not a requirement. The cathode is connected to a feed-back winding, L_2, rather than to a direct tap on L_1, to make adjustment of feed-back less difficult. A high-C tank circuit is obtained by the fixed padders, C_1 and C_2, which are of the zero-drift type. Bandspread tuning is obtained by the split-stator condenser, C_3.

When coils 1 and 1A (see coil charts) are plugged in, the two sections of C_3 are connected in parallel and the output-frequency spread is 1750 to 2050 kc. to cover the 1.75-Mc. band or, through a doubler, the 3.5-Mc. band. Similarly, with coils 2 and 2A, the two sections of C_3 are in parallel and the output-frequency spread is 3500 to 4000 kc. to cover the 3.5-Mc. band.

When coils 1B and 1AB are plugged in, the sections of C_3 are in series and the output-frequency range is 1750 to 1825 kc. for obtaining, through doublers, the frequency ranges of 7000 to 7300 and 14,000 to 14,400 kc. Similarly, when coils 2B and 2AB are plugged in, the output-frequency range is 3500 to 3650 kc. for obtaining, through doublers, the same frequency ranges of 7000 to 7300 and 14,000 to 14,400 kc. The sections of C_3 are also in series when coils 3 and 3A are plugged in and the output-frequency range is 7000 to 7300 kc. for covering the 7-Mc. band and, through a doubler, the 14-Mc. band.

When coils 3B and 3AB are plugged in, only one section of C_3 is in use and the output-frequency range of 7000 to 7500 kc. is useful in obtaining, through doublers, the range of 28,000 to 30,000 kc.

Proper connections to C_3 are made automatically when each oscillator coil is plugged in, as shown in Fig. 1253.

Choke coupling is used between the oscillator and the 6L6 isolating stage. This stage is operated very close to Class-A conditions and is tuned to the second harmonic of the oscillator frequency. Thus, the oscillator operates at half the desired output frequency. The type 6L6 tube is used to take care of the unusually high dissipation resulting from this type of operation. The tuning of the output tank circuit is ganged with that of the oscillator. Tracking taps on the output coil, L_3, are required only for spreading the higher-frequency bands. Adjustable mica trimmers, C_6, are mounted in each coil form.

To solve some of the difficulties often encountered in key-filtering an oscillator of this type, the oscillator stage is keyed in the screen circuit. This means that both sides of the key are at a potential of 150 volts above ground po-

Fig. 1252 — Circuit diagram of the v.f.o. exciter unit.
C_1, C_2 — 300 $\mu\mu$fd. each, zero-drift type (Centralab 816Z).
C_3 — 140 $\mu\mu$fd. per section (Hammarlund MCD-140-S).
C_4 — 100-$\mu\mu$fd. mica.
C_5 — 250-$\mu\mu$fd. mica.
C_6 — 45-260-$\mu\mu$fd. mica trimmer (Hammarlund CTS-160).
C_7 — Approximately 65 $\mu\mu$fd. (Hammarlund MC-100-S with two stator and two rotor plates removed).
C_8, C_9, C_{10}, C_{11}, C_{12} — 0.01-μfd. paper.
J — Closed-circuit jack.
R_1 — 0.1 megohm, ½-watt.
R_2 — 0.1 megohm, ½-watt.
R_3 — 500 ohms, 1-watt.
L_1, L_2, L_3, L_4 — See Fig. 1253.

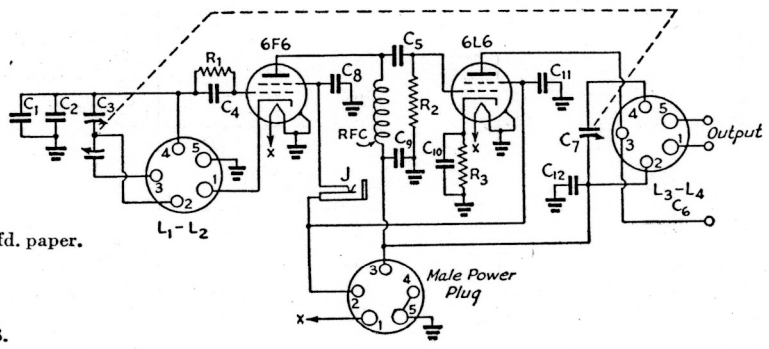

COIL-SELECTION TABLE FOR VARIABLE-FREQUENCY UNIT *					
Transmitter Output Freq.	*1.75 Mc.*	*3.5 Mc.*	*7 Mc.*	*14 Mc.*	*28 Mc.*
Crystal Freq. 1.75 Mc.	1 & 1A	1 & 1A	1B & 1AB	1B & 1AB	—
3.5 Mc.	—	2 & 2A	2B & 2AB	2B & 2AB	—
7 Mc.	—	—	3 & 3A	3 & 3A	3B & 3AB

* Numbers refer to coils in coil-dimension table.

tential. It is, therefore, preferable to use a relay to isolate the key contacts from this voltage. Otherwise, due caution should be exercised. If preferred, cathode keying may be used as shown in Fig. 1253-F, but it is more difficult to obtain soft keying without introducing chirp with this system. With cathode keying, the screen connection will go directly to pin No. 2 on the power plug, eliminating the jack in the screen circuit.

A link winding, L_4, is provided for coupling the output of the exciter unit to the input of the amplifier stage which it is to drive.

Coils — Coil dimensions for several oscillator ranges are given in the coil table under Fig. 1253. Only those which suit the conditions under which the unit is to be operated need be constructed. This will depend upon the type of transmitter with which the unit is to be used. To begin with, only coils need be provided giving output in bands for which crystals, formerly used, are ground. For instance, if the oscillator stage to be driven is designed for 1.75-Mc. crystals only, coils need be wound for this band only. If the *transmitter* operates only in the 1.75-Mc. band, or, by doubling, in

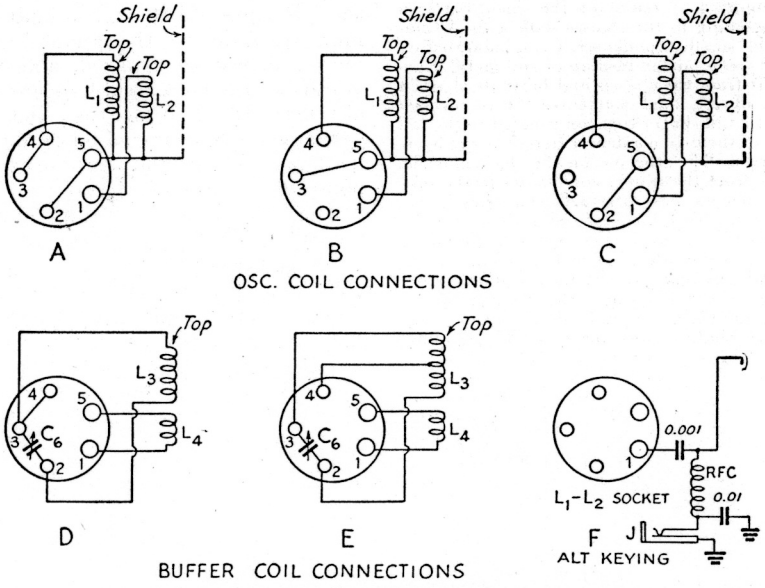

Fig. 1253 — Coil-form connections for the v.f.o. circuit of Fig. 1252. Connections shown at A are for coils 1 and 2. Those shown at B are for coils 3, 1B and 2B. Connections shown at C are for coil No. 3B. Buffer coils 1A and 2A should be connected as shown at D, while coils 3A, 1AB, 2AB and 3AB should be connected as shown at E. F shows the circuit for optional cathode keying instead of screen keying, as mentioned in text. *RFC* is an ordinary 2.5-mh. r.f. choke. Coil dimensions are as follows:

*Oscillator (L_1 and L_2)**

Coil No. 1 — (875 to 1025 kc.) — 47 turns No. 26 d.s.c., 7/8-inch long; 6 turns for L_2.

Coil No. 2 — (1750 to 2000 kc.) — 23 turns No. 20 d.s.c., 1¼ inches long; 2 turns for L_2.

Coil No. 3 — (3500 to 3650 kc.) — 14 turns No. 20 d.s.c., 1¼ inches long; 2 turns for L_2.

Coil No. 1B — (875 to 912.5 kc.) — 57 turns No. 26 d.s.c., 1⅛ inches long; 5 turns for L_2.

Coil No. 2B — (1750 to 1825 kc.) — 28 turns No. 20 d.s.c., 1 inch long; 2 turns for L_2.

Coil No. 3B — (3500 to 3750 kc.) — 13½ turns No. 20 d.s.c., 1-inch long; 2 turns for L_2.

* Wound on Millen 1-inch diameter forms, L_2 wound turn-for-turn over bottom end of L_1 in same direction.

*Buffer Coils (L_3 and L_4)***

Coil No. 1A — (1750 to 2050 kc.) — 41 turns No. 24, 1¾ inches long; approximately 12 turns for L_4.

Coil No. 2A — (3500 to 4000 kc.) — 21 turns No. 18, 1½ inches long; approximately 6 turns for L_4.

Coil Co. 3A — (7000 to 7300 kc.) — 14 turns No. 18, 1½ inches long, tapped at 3 turns from bottom; approximately 4 turns for L_4.

Coil No. 1AB — (1750 to 1825 kc.) — 46 turns No. 24, 1¾ inches long, tapped at 19 turns from bottom; approximately 12 turns for L_4.

Coil No. 2AB — (3500 to 3650 kc.) — 24 turns No. 18, 1½ inches long, tapped at 9½ turns from bottom; approximately 6 turns for L_4.

Coil No. 3AB — (7000 to 7500 kc.) — 14 turns No. 18, 1½ inches long, tapped at 5 turns from bottom; approximately 4 turns for L_4.

** Wound on Hammarlund 1½-inch diameter forms, L_4 close-wound below L_3.

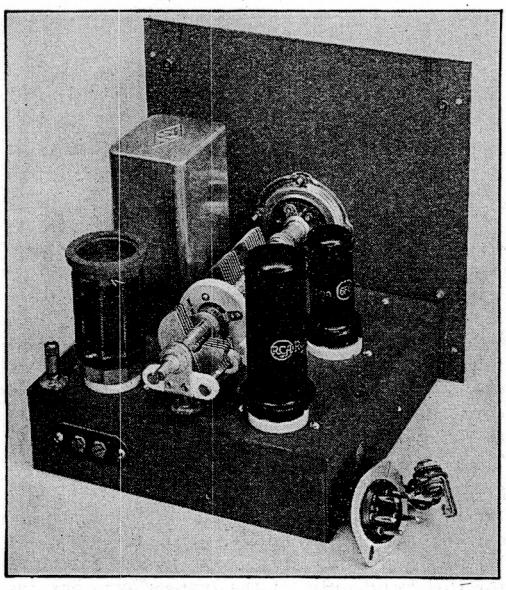

Fig. 1254 — Components for the v.f.o. exciter are assembled on a 7 × 7 × 2-inch chassis. The dual-section condenser is mounted by removing the shield between sections and fastening to the chassis with a single machine screw. The smaller condenser, C_7, is mounted on National polystyrene button insulators and metal spacers to insulate it from the chassis and bring its shaft in line with that of the dual condenser. It is reverse-mounted, with its tail shaft extension coupled to the tail shaft extension of the dual condenser to reduce the overall mounting space. The stop pin on the shaft must be removed. Leads from the tuning condensers to the sub-mounted coil sockets pass through the chassis via ½-inch holes lined with rubber grommets. The jack for the key, which must be insulated, and the male power connector mount in the side of the cabinet. The chassis is fastened firmly in place with long machine screws running through the chassis and the bottom of the cabinet. The terminals at the rear are for link-output connections, the binding post for capacity coupling.

the 1.75- and 3.5-Mc. bands exclusively, only the 1.75-Mc. coils for the first bandspread range will be required. If, however, the transmitter is designed to cover the 7-Mc. band, as well as the lower-frequency bands, from a 1.75-Mc. crystal, coils for the second bandspread range will also be necessary to get full bandspread at 7 Mc. An examination of the coil-selection table will show what coils are required, depending upon the crystal frequency normally used to secure output in the desired band. If full bandspread at 7-Mc. and higher frequencies is not deemed necessary, the wide-bandspread coils for these frequencies need not be constructed.

The oscillator coils are wound on Millen one-inch diameter coil forms which are mounted in National PB-10 five-prong shielded plug-in bases. The feed-back coils, L_2, are wound over the bottom turns of L_1, and in the same direction. Connections to the base pins are given in Fig. 1253-A, B and C.

The buffer coils are wound on Hammarlund 1½-inch diameter five-prong forms. The padding condensers, C_6, are mounted inside the coil forms, fastened in place with a 4-36 machine screw. Buffer coils for the higher-frequency ranges must be tapped as directed. One satisfactory way of making this tap is to drill a hole near the bottom of the form for a wire which may be brought outside from the pin to which the tap must be connected. The turn which is being tapped, as indicated in the table of coil dimensions, may be scraped and the tap wire soldered to this turn. Pin connections are shown in Fig. 1253-D and E.

Tuning — Before an attempt is made to tune the circuits, the dropping resistor, R_2, in the power supply should be adjusted. This is done with any pair of coils plugged in and the key closed. Starting with maximum resistance, the slider should be adjusted, bit by bit, until the VR tubes ignite. As much resistance as possible should be left in the circuit consistent with the maintenance of reliable operation of the VR tubes. If the tubes ignite with maximum resistance in the circuit further adjustment will not be required, unless the output voltage of the pack used happens to be unusually high. If this is the case, the dropping resistance should be increased until the VR tubes no longer ignite and then decreased to the point where they just ignite.

The first step in tuning the unit is to check the frequency range of the oscillator. It is probable that differences in wiring inductances and capacities will make it necessary to make slight alterations in the oscillator coil dimensions given in the table. Unless these differ widely from those of the original model, however, nothing more than an adjustment of the spacing of a few turns at the top of L_1 should be required.

If close calibration is desired, a 100-kc. oscillator checked against WWV, or other frequency-checking means, should be provided.

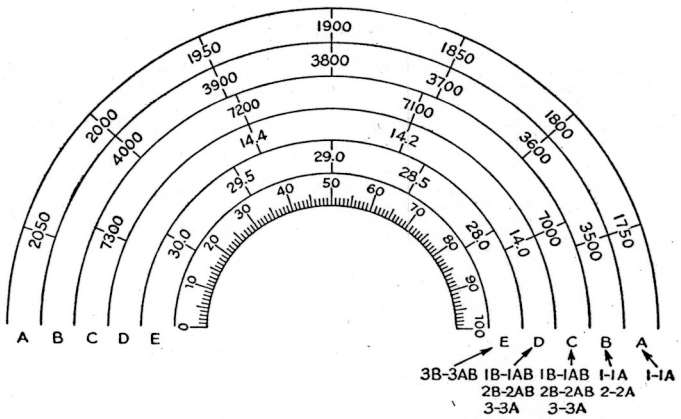

Fig. 1255 — Typical dial calibration for the v.f.o. unit. Notations at lower right indicate the calibrated ranges of the coil sets listed under Fig. 1253 and in the coil-selection table. Details of calibration are given in the text.

The approximate range of the oscillator coil under adjustment may be determined by listening on a receiver. The 1.75-Mc. range of the receiver should be used for checking coil No. 1. The ranges of other coils may be checked with the receiver tuned to the 3.5-Mc. band, since the harmonics of 2000 to 2050 kc. are the only usable frequencies to fall outside this band.

If the signal from the oscillator is not picked up at any point in the band with any setting of the v.f.o. dial, a wire should be run from the receiver antenna post to a point near the oscillator coil. If it is still impossible to pick up the signal, it is possible that the oscillator may not be functioning. *One* turn should then be added to the feedback winding. More than the single additional turn should not be required. If the winding is larger than that required to maintain reliable operation with the key closed, the circuit may oscillate weakly even with the key open. This condition is to be avoided, of course, if break-in operation is contemplated.

When the oscillator is functioning satisfactorily, the spacing of the top turn or two of L_1 should be adjusted until the desired band is centered on the dial of the unit. This can be done by spreading a turn or two, as mentioned previously. The shield can should be replaced each time a check is made. When the adjustment is final, the turns should be fastened permanently in place with Duco cement. The v.f.o. unit should be warmed up thoroughly before making a permanent calibration.

The National ACN dial has space for calibrating five ranges. Since the bandspread *ratio* is the same for the two lowest-frequency sets of coils, the oscillator coils for each of these ranges may be adjusted so that the 3.5-Mc. harmonics of the 1.75-Mc. range (1 and 1A) will coincide with the fundamental frequencies of the 3.5-Mc. range (2 and 2A) and one scale on the dial will serve for both calibrations. It is only necessary to adjust the oscillator coil of the 3.5-Mc. range so that the low-frequency end of the band falls at the same point as the second harmonic of 1750 of the 1.75-Mc. range falls when the 1.75-Mc. coils are plugged in. With similar adjustments, the 7-Mc. and 14-Mc. ranges of the coils 1B and 1AB, 2B and 2AB and 3 and 3A may be made to coincide. In the end there will be a single calibration on the dial for each band, and only five calibrations will be required for the complete set of coils listed in the coil table. A typical dial calibration is shown in Fig. 1255. Intermediate points may be marked in as desired. While the 14-Mc. band does not cover as much of the dial as do the other bands, nevertheless the bandspread is entirely adequate to enable accurate setting to zero-beat in this band.

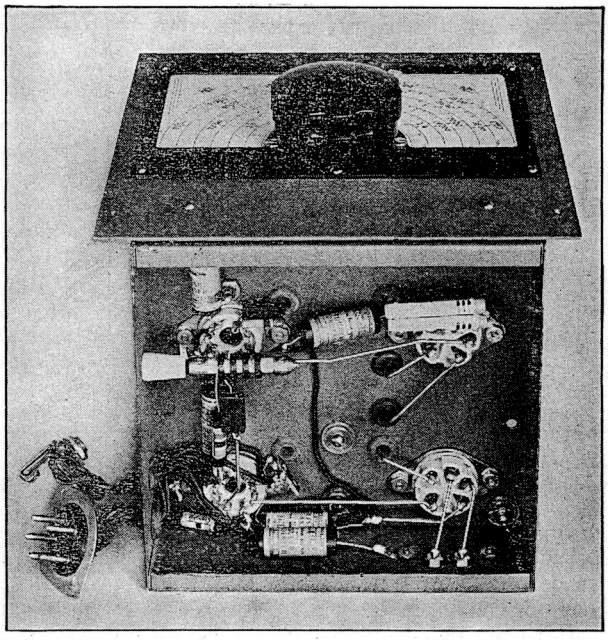

Fig. 1256 — High-frequency connections underneath the chassis of the v.f. exciter unit are made with short, straight sections of heavy wire. The two zero-temperature padding condensers are soldered directly to the oscillator-coil socket. All components are mounted firmly with no opportunity to support mechanical vibration. Washers 1/16-inch thick are placed between the panel and the chassis to provide space for the lower lip of the cabinet opening.

With the oscillator ranges adjusted, the next step is to adjust the tracking of the buffer stage. A 6.3-volt (150-ma.) dial lamp with one or two turns of wire should be coupled to the output tank coil to act as an indicator. With the condenser gang set at minimum capacity, the padder, C_6, in the coil form should be adjusted for maximum brilliance of the lamp. The gang should now be turned to maximum capacity. If the lamp decreases in brilliance, readjust C_6, noting carefully whether an increase or decrease in capacity of C_6 is required to bring the lamp up to its original brilliance. (If the padders suggested in the parts table are used, and if they are mounted in the coil forms with their terminals downward, clockwise rotation of the adjusting screw will decrease capacity, while counter-clockwise rotation will increase capacity. If mounted with the terminals upward, the action will be reversed.) If an increase in the capacity of C_6 is required with coils having no bandspread tap, C_7 is not tuning fast enough and a turn should be added to L_3. If a decrease in the capacity of C_6 is required, a turn should be removed from L_3. With the tapped coils, the tap should be moved a turn toward the top of L_3, if an increase in C_6 is required, or moved a turn toward the bottom of the coil, if a decrease is required.

After each adjustment of the coil, tracking should again be checked by adjusting C_6 for maximum brilliance with the condenser gang at minimum capacity and then checking at

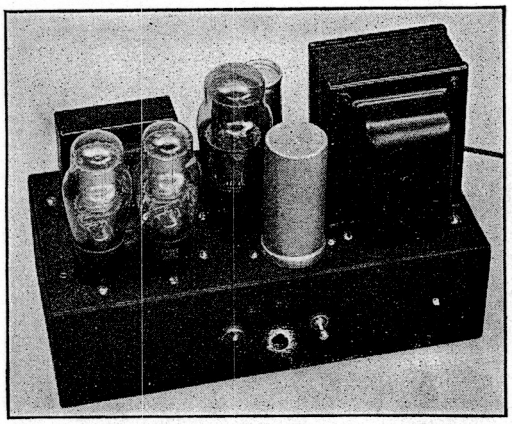

Fig. 1257 — Voltage-regulated power supply for the v.f. exciter unit. L_2 is mounted underneath the chassis.

maximum capacity. These adjustments are simple and no trouble should be experienced in speedily arriving at the correct adjustments. When proper adjustments have been made, there should be no appreciable change in the brilliance of the lamp at any setting of the gang condenser.

If a check on plate currents is desired, meters may be inserted temporarily by opening up the wiring underneath the chassis. With correct adjustments of the tickler windings, L_2, the oscillator plate current should run between 12 and 15 ma. The buffer plate current should run at about 19 ma. with the key open and increase one milliampere or less with the key closed. Large changes in this plate current indicate that there are too many turns on L_2.

Power supply — The v.f.o. unit operates from the power supply shown in Fig. 1257 and whose circuit is shown in Fig. 1258. The two are connected with a length of five-conductor shielded battery cable fitted with a five-prong female connector at the unit and a similar male plug at the power-supply end. The shield is connected to pin No. 5 at each end. Almost any of the usual type of well-filtered receiver power supplies delivering 325 to 350 volts with a 50-ma. or better rating may be made to serve the purpose equally well, merely by the addition of the VR150-30 regulator tubes and the dropping resistor, R_2.

Feeding Crystal-Oscillator Stages

The output of the v.f.o. unit is sufficient to drive a type 807 or similar tube. Such a stage may be link coupled to the unit by means of L_4 or capacity coupled by connecting the coupling capacity to the plate terminal of the 6L6. In the latter case, a readjustment of C_6 will be required to restore resonance, but retracking should not be necessary.

However, it is expected that the unit will be used more frequently to drive the crystal-oscillator stage of a crystal-controlled transmitter already in operation. While other methods of coupling between the crystal-oscillator stage and the v.f.o. unit may be devised, one satisfactory system which reduces the possibility of instability of the crystal-oscillator tube when coupled to the v.f.o. unit will be described in detail. Most crystal-oscillator stages are not sufficiently well-screened to permit operating the stage as a conventional straight amplifier with input and output circuits tuned to the same frequency. While the substitution for the crystal of a tuned circuit link-coupled to the output of the v.f.o. unit is the recommended method of coupling when the crystal stage is to be used as a frequency doubler, the stage will invariably break into oscillation if the same system is used for fundamental operation. One satisfactory method of preventing this is to switch the link line to the cathode circuit for fundamental operation. The system is shown applied to several types of crystal-oscillator circuits in Fig. 1259.

In each case, a tank circuit, C_gL_g, tuned to the frequency of the crystal which it supplants, replaces the crystal when the stage is to be operated as a frequency doubler. The insertion of the condenser C is required to prevent short-circuit of the grid leak. The tank circuit is coupled to the output of the v.f.o. through a link line connecting at the points marked H-H. The openings indicated in the cathode circuits may be closed by a shorting bar. It is important to keep the shorting-bar leads as short as possible, otherwise there is danger of self oscillation even though the tuning of the grid and plate tanks may differ widely. In Tri-tet and grid-plate circuits, the cathode tanks must be shorted as indicated.

Fig. 1258 — Circuit diagram of the voltage-regulated power supply for the variable-frequency exciter unit.

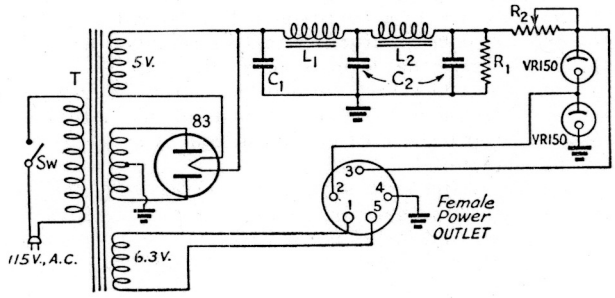

C_1 — 8 μfd. 500-volt electrolytic (Mallory HD683).

C_2 — Dual-section 450-volt electrolytic, 40 μfd. per section, one section on each side of L_2 (Mallory FPD238).

L_1, L_2 — 15 henrys, 100 ma. (UTC R19).

R_1 — 25,000 ohms, 10-watt.

R_2 — 2500 ohms, 25-watt with slider.

T — Combination power transformer: 375 volts r.m.s. each side of center-tap, 100 ma.; 5 volts, 3 amperes; 6.3 volts, 6 amperes (UTC R12).

Sw — S.p.s.t toggle switch.

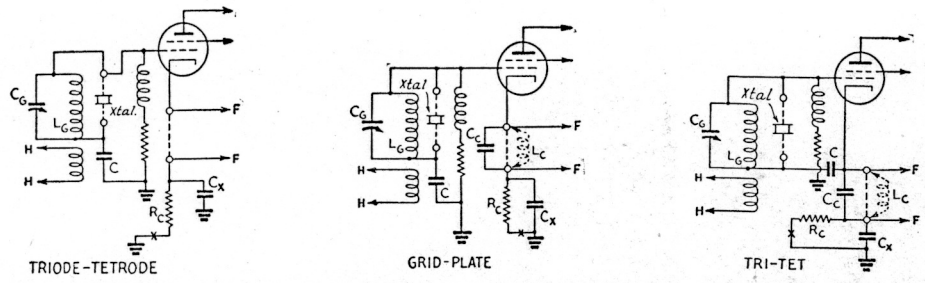

Fig. 1259 — Methods of coupling the output of the v.f.o. to crystal-oscillator stages of various types. See text for details. *C* is a mica condenser of 0.001 μfd. to prevent short-circuit of the grid leak. R_c and C_x are the usual oscillator cathode resistor and by-pass. C_c and L_c are the usual cathode-circuit tanks in the grid-plate and Tri-tet circuits. The v.f.o. link output is connected at H-H for harmonic operation and to F-F for fundamental operation. C_g is 100 μμfd. for the 1.75-Mc. band and 50 μμfd. for the 3.5- and 7-Mc. bands. Dimensions for L_g are as follows:

1.75-Mc. input — 64 turns No. 24 d.s.c., close-wound, 1½-inch diameter.

3.5-Mc. input — 40 turns No. 24, 1½-inch diameter, 1½-inches long.

7-Mc. input — 20 turns No. 18, 1½-inch diameter, 1½ inches long.

Link windings consist of 8, 6 and 5 turns respectively for the 1.75-, 3.5- and 7-Mc. bands, close-wound below L_g.

When the crystal stage is to be operated as a straight amplifier, the grid tank is removed, leaving the crystal position open. The link line from the v.f.o. is shifted to the points marked F-F and the cathode shorts indicated by the dotted lines removed. In Tri-tet or grid-plate oscillators, the cathode inductances and preferably the cathode tuning condensers also must be removed. If a cathode resistor is used, the excitation should be introduced between the cathode and the junction of the cathode resistor and its by-pass condenser.

If the v.f.o. is to be keyed, the key terminals of the crystal stage must be shorted. A small amount of fixed bias may have to be connected between grid leak and ground to prevent excessive plate current when the key in the v.f.o. circuit is open. If break-in keying is not desired, the v.f.o. may be operated continuously and the crystal stage keyed as usual.

Values for the substitute grid tank coil are given in Fig. 1259. A fairly-high *L/C* ratio has been chosen and, in most cases, any one band may be covered without retuning of the grid tank, if it is set to resonance in the middle of the band. The remainder of the transmitter will be tuned in the usual manner.

The details of a convenient plug-in system which takes care of all connections in shifting from Tri-tet crystal operation (used in most of the transmitters described in this chapter) to either fundamental or doubler operation when using the v.f.o. unit are shown in Fig. 1260. The grid tank for doubler operation is plugged into the same six-prong tube socket used for the crystal. Link connections to the v.f.o. are made through pin jacks H-H. A short-circuiting wire connects pin jacks F-F into the cathode circuit. The leads from the cathode-coil socket to these jacks and the shorting wire should be kept short. The cathode coil should be removed from its socket.

For fundamental operation with the v.f.o. unit, the tank is removed from the grid-circuit socket and the shorting wire removed from F-F, to which the link line from the v.f.o. is then shifted.

For crystal operation, the crystal is plugged into the grid circuit between prongs 6 and 3, or between 5 and 2, and the cathode coil is plugged into its socket, automatically connecting in the cathode condenser, C_c. The v.f.o. link line must be disconnected. Similar combinations may be worked out for other oscillator circuits.

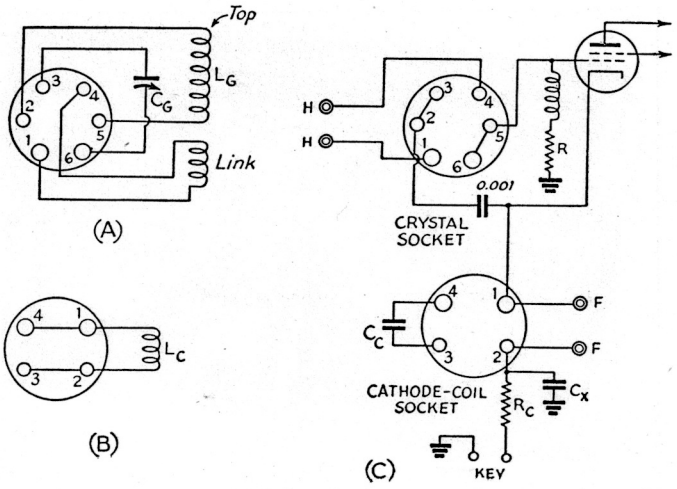

Fig. 1260 — Plug-in coil system for conveniently making connections in a Tri-tet oscillator circuit for optional crystal or v.f.o. operation. The grid tank for doubler operation is plugged into the same six-prong tube socket used by the crystal. A shows the connections of the plug-in grid tank for doubler operation of the crystal stage with v.f.o. input. Values for L_g, C_g, and link coils are given under Fig. 1259. B shows connections for the plug-in cathode coil, L_c, which is the usual Tri-tet cathode winding. C shows the circuit complete with all socket connections. C_c is the usual Tri-tet cathode-tank capacity and R_c and C_x are the usual cathode resistor and by-pass condenser.

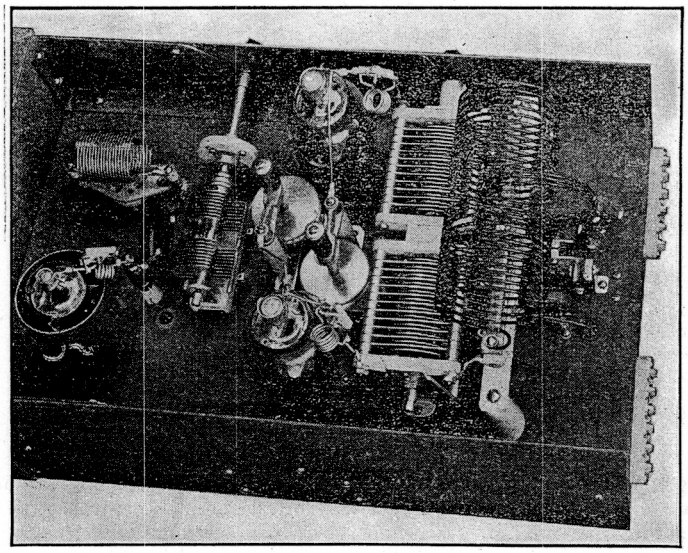

Fig. 1261 — Top view of the gang-tuned driver and push-pull amplifier designed to work with the v.f.o. unit of Fig. 1251. The chassis is elevated by 17 × 8-inch panels on each side. The 807 socket, which is mounted an inch below the chassis top on spacers, and the socket for the coupling transformer, L_1L_2, at the left-hand end of the chassis, are on either side of the bandspread condenser, C_2, underneath. The 807 padding condenser, C_1, is next to the right with an insulating coupling on its shaft which is 5½ inches from the left-hand end of the chassis. The shaft of the final-amplifier padding condenser, 5½ inches from the right-hand end of the chassis, is also fitted with an insulating coupling. The condenser is mounted on National polystyrene button insulators to bring its shaft level with that of C_1. The sockets for the 812s are at either end of C_3, with the neutralizing condensers between to make neutralizing leads short. The jack bar for the tank coil, L_3, is mounted on 2-inch cone insulators.

A Gang-Tuned 450-Watt Push-Pull Amplifier and Driver

Figs. 1261, 1262 and 1264 show a gang-tuned unit which may be added to the v.f.o. unit of Fig. 1251. As shown in Fig. 1263, it consists of a push-pull amplifier and a driver stage, the tuning controls of which are coupled to the tuning shaft of the v.f.o. unit. Once adjusted for any given band, the entire transmitter can be tuned with the single dial of the v.f.o. unit.

The two stages are coupled inductively with the tuning condensers connected across the grid winding. The use of inductive coupling solves the problem of balanced excitation to the amplifier without the dual tuning controls required with link coupling. C_1 and C_3 are the tank condensers, used for setting the circuits to the desired band. C_2 and C_4 are the band-tuning condensers. The two stages are adjusted for tracking by varying the portion of the coils across which C_2 and C_4 are connected.

The trap circuits, L_4C_5, L_5C_6 and L_6C_7, are for the suppression of v.h.f. parasitics.

The milliammeter may be switched to read 807 cathode or screen current, amplifier grid current, or amplifier cathode current.

Coils — While homemade coils of equivalent dimensions may be substituted, it may be found more convenient to alter manufactured coils. The National coils suggested for L_1 should be obtained minus the links and mountings. Stripped, it will be found that these coils fit snugly inside the B & W coils used for L_2, and that the plastic strips on each coil hold them central to prevent short circuits between L_1 and L_2. The link winding should be removed from L_2. The free base-pins thus provided will serve for the connections to C_2. The tubular rivets at each end of the bottom spacing strip of the coil should be drilled or filed out, and ¾-inch 6-32 machine screws substituted. A Johnson banana plug is fastened at each end and the ends of L_1 are connected to these plugs.

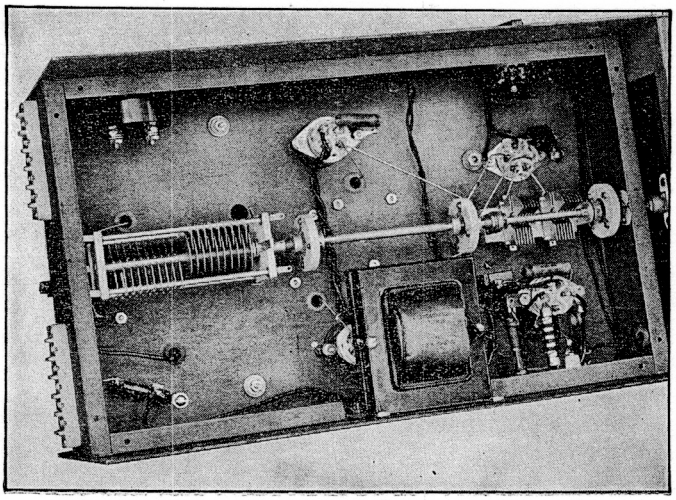

Fig. 1262 — Bottom view of the gang-tuned unit. The final amplifier bandspread condenser, C_4, is mounted as far to the left as possible, on National polystyrene button insulators stacked to bring the shaft level with that of the driver bandspread condenser, C_2, to the right. The shafts of the two condensers are connected with flexible ceramic insulating couplings and also to the tail shaft of C_7 in the v.f.o. unit through a hole cut in the rear of the v.f.o. cabinet. C_2 is turned around so that its tail shaft couples to the shaft of the v.f.o. unit. The mounting hole of the condenser should come 2½ inches from the left-hand edge of the chassis. The shaft stop pin should be removed. The remaining below-chassis wiring is simple and direct. Heavy tinned wire is used for all r.f. leads. The filament transformer is mounted below the chassis at the center rear. Insulated or protected terminals are used for all external power supply connections.

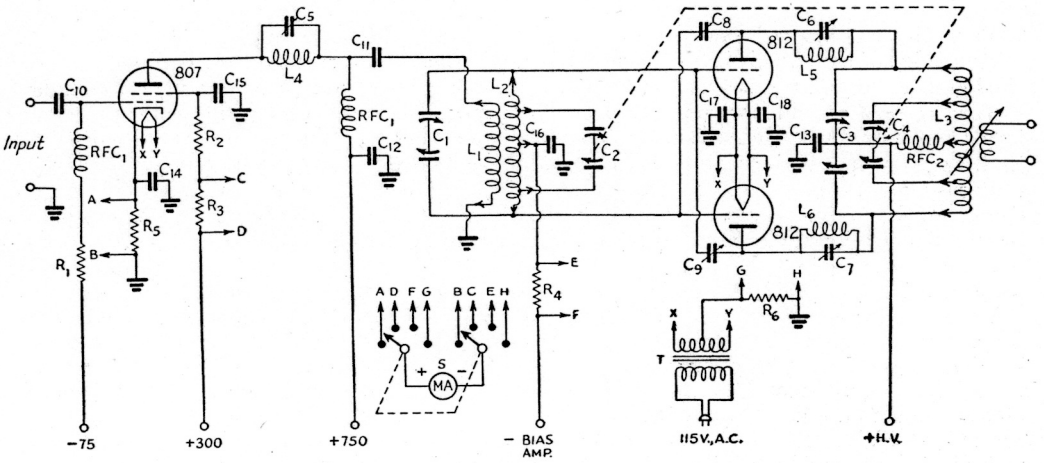

Fig. 1263 — Circuit diagram of the 450-watt gang-tuned driver and push-pull amplifier unit.

C_1 — 140 $\mu\mu$fd. per section (Hammarlund MCD-140-S).
C_2 — 100 $\mu\mu$fd. per section (Hammarlund MCD-100-S).
C_3 — 150 $\mu\mu$fd. per section, 0.07-inch spacing (Johnson 150ED30).
C_4 — 65 $\mu\mu$fd. per section, 0.07-inch spacing (Hammarlund HFBD-65-E).
C_5, C_6, C_7 — 3–30-$\mu\mu$fd. mica trimmer (National M-30).
C_8, C_9 — Neutralizing condensers (National NC-800).
C_{10} — 100-$\mu\mu$fd. mica.
C_{11}, C_{12} — 0.001-μfd. mica, 1000-volt rating.
C_{13} — 0.001-μfd. mica, 7500-volt (Aerovox 1623).
C_{14}, C_{15}, C_{16}, C_{17}, C_{18} — 0.01-μfd. mica.
MA — Milliammeter, 100-ma. scale.
R_1 — 25,000 ohms, 1-watt.
R_2 — 20,000 ohms, 10-watt variable.
R_3, R_4 — 25 ohms, 1-watt.
R_5 — Meter multiplier resistance, 2 times, wound with No. 26 wire.
R_6 — Meter multiplier resistance, 5 times, wound with No. 24 wire.
RFC_1 — 2.5-mh. r.f. choke.
RFC_2 — 500-ma. r.f. choke (Hammarlund CH500).
S — Two circuit, 4-contact switch (Mallory 3234J).
T — 6.3 volts, 10 amperes (Thordarson T-19F99).
L_1 — Mounted inside L_2:
1.75 Mc. — 45 turns No. 24, 1¼-inches diameter, 1⅜ inches long (National AR80, unmounted, 11 turns removed).
3.5 Mc. — 22 turns No. 22, 1¼-inch diameter, 1¼ inches long (National AR40, unmounted, 6 turns removed).
7 Mc. — 14 turns No. 20, 1¼-inch diameter, 1¼ inches long (National AR20, unmounted).
L_2 — 1.75 Mc. — 58 turns No. 24, 1⅝-inch diameter, 2¼ inches long, taps at ends of coil (B & W JCL-160, no link).
3.5 Mc. — 28 turns No. 22, 1⅝-inch diameter, 1½ inches long, taps at 3 turns from each end (B & W JCL-80, no link, 8 turns removed from each end).
7 Mc. — 18 turns No. 16, 1⅝-inch diameter, 1½ inches long, taps at 6 turns from each end (B & W JCL-40, no link, 5 turns removed from each end).
L_3 — 1.75 Mc. — 60 turns No. 16, 5½ inches long, 2½-inch diameter, ⅝-inch space at center for link, taps at ends of coil (B & W TVH-160).
3.5 Mc. — 38 turns No. 14, 5¼ inches long, 2½-inch diameter, ¾-inch space at center for link, taps at 3¾ turns from each end (B & W TVH-80).
7 Mc. — 24 turns No. 12, 5¼ inches long, 2½-inch diameter, ¾-inch space at center for link, taps at 7¾ turns from each end (B & W TVH-40).
L_4 — 5 turns No. 14, ⅜-inch diameter, 1 inch long.
L_5, L_6 — 4 turns No. 14, ⅝-inch diameter.

In the chassis, on either side of the coil socket and directly below the banana plugs, a hole should be drilled. The one on the right-hand side should be ¼-inch in diameter, while the one on the left-hand side should be ½-inch in diameter. A jack to fit the banana plug should be placed in a National polystyrene button-type insulator with the shoulder filed off and the hole drilled out to fit the jack. This jack, mounted in the ¼-inch hole with the insulator as a spacer, then serves to make the ground connection for L_1. The ½-inch hole is for a second jack insulated from the chassis by a pair of button insulators which serves as the connection for the other end of L_1.

The B & W type TVH coils are supplied with extra plugs which may be used for the ganging taps for C_4.

Both L_2 and L_3 require no bandspread taps for the 1.75-Mc. band; the plugs for the taps and those for the ends of the coils are simply tied together, connecting the bandspread and padding condensers in parallel for this band.

¶ Combining Units

Fig. 1264 shows how the two units are joined together. The output of the v.f.o. and the input of the 807 driver stage are coupled capacitively, a short wire connecting the binding post in the v.f.o. unit with the coupling condenser, C_{10}, in the ganged unit. Large holes are made in the rear of the v.f.o. cabinet and the end of the chassis to clear a small National rigid shaft coupling. The height of the chassis should be adjusted so that the shafts of the two units line up perfectly. If the condenser

COIL-SELECTION TABLE FOR GANGED UNIT

Band	*Osc.*	*Buffer*	*Driver*	*Final*
1.75 Mc.	No. 1	No. 1A	1.75 Mc.	1.75 Mc.
3.5 Mc.	No. 2	No. 2A	3.5 Mc.	3.5 Mc.
7 Mc.	No. 3	No. 3A	7 Mc.	7 Mc.
14 Mc.	No. 3	No. 3A	14 Mc.	14 Mc.

gangs in each unit have been mounted as described, the shafts will be lined up when the bottom edge of the chassis is 2¼ inches above the bottom edges of the supporting panels.

Tuning — If coil dimensions have been followed carefully, there should be little difficulty in lining up the various stages. The shaft couplings must be adjusted so that all condensers of the gang arrive at maximum or minimum capacity simultaneously. Coils should be plugged in the various stages for the desired band, using the coil-selection table as a guide.

With the tuning control set for the high-frequency edge of the band, the voltage-regulated supply and the bias supply should be turned on simultaneously. This will apply plate voltage to the v.f.o. unit and screen voltage to the 807. Using the 807 screen current as an indicator, the trimmer of the buffer stage in the v.f.o. unit should be lined up. Maximum screen current indicates resonance. The key should not be held closed for excessively long periods, to limit screen heating. Tuning to the low-frequency end of the band should show negligible change in screen current. Should there be evidence of poor tracking, the buffer stage can be brought into line as discussed in describing the tuning of the v.f.o. unit.

Plate voltage may now be applied to the 807 and the stage tuned to resonance with C_1. A check should be made for parasitic oscillation, with a lamp of sufficient size to reduce the plate voltage to about half in series with the primary of the 750-volt transformer. At several settings of the v.f.o. unit C_1 should be varied throughout its range, carefully noting any change in cathode current which would indicate oscillation. An additional check may be made by touching a neon bulb to the plate of the 807. Should oscillation occur, C_5 should be adjusted until the oscillation is suppressed.

Turning now to the tracking of the driver stage, tuning C_1 to resonance should result in a showing of amplifier grid current. Again starting at the h.f. end of the band, C_1 should be adjusted for maximum grid current. If there is a serious falling off of grid current at the l.f. end, determine if readjusting C_1 will bring the grid current back up. If it does not, the size of L_1 must be increased by one or two turns. If, however, retuning of C_1 shows the tuning to be off resonance at the l.f. end of the band, it should be carefully noted whether an increase or a decrease in the capacity of C_1 is necessary to restore resonance. If an increase in C_1 is required, the taps of C_2 should be spread slightly farther apart; if a decrease is required, they should be brought closer together. After each check the tuning of the unit should be returned to the h.f. end and realigned, before again checking the l.f. end.

However, should the first check at the l.f. end of the band show an increase in grid current over that obtained at the h.f. end a turn or two should be removed from L_1, after which the tracking should again be checked.

With substantially constant grid current over the band, the amplifier may be neutralized in the usual manner. With the amplifier operating at reduced plate voltage, a check similar to that described for the 807 stage should be made to eliminate any tendency toward parasitic oscillation. For several settings of the ganged control, C_3 should be varied throughout its range. If oscillation occurs, C_6 and C_7 should be adjusted in equal steps until it ceases.

Still operating at reduced plate voltage, the amplifier should be loaded with a lamp bulb of 150 to 200 watts connected to the output link. C_3 should be adjusted for resonance at the h.f. end of the band. Tuning across the band should now show no appreciable change in power input or output. If a check, by retuning C_3 at the l.f. end of the band, shows the stage to be off resonance, a note should be made as to whether an increase in the capacity of C_3 or a decrease is necessary to restore reso-

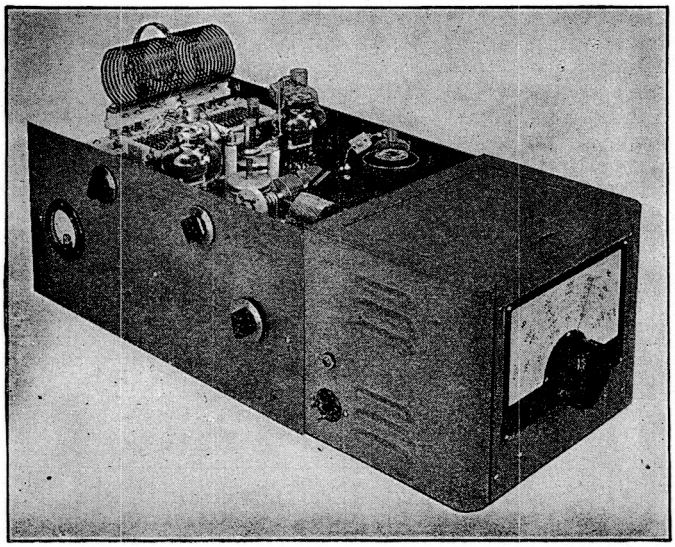

Fig. 1264 — The v.f.o. unit of Fig. 1251 combined with the gang-tuned driver and push-pull final amplifier. The two units are fastened together with 7-inch triangular brackets, the tops of which have been cut off to fit, on each side of the chassis. The excitation lead to the grid of the 807 passes through a grommet-lined hole in the back of the v.f.o. cabinet. The milliammeter and the meter switch are placed on the panel to balance each other at opposite ends of the chassis. Holes for these components must be cut in the chassis edge. The control at the left is for setting the final-amplifier padder or band-setting condenser, C_3, while the control to the right is for the driver padder, C_1. The 10 × 17 × 3-inch chassis is elevated approximately 2¼ inches by supporting it on panels 8 inches high running the length of the chassis. The clearance and assembly holes through the panel and chassis should be made slightly oversize to permit accurate adjustment of the chassis height for lining up the tuning-condenser shafts.

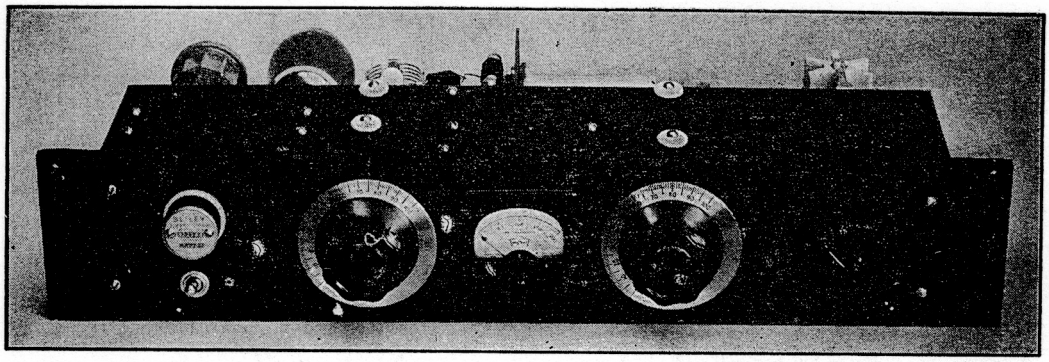

Fig. 1265 — The two-tube plug-in coil exciter is built to conserve space in the relay rack. The panel is 3½ × 19 inches. A clearance hole is cut in the left end of the panel for the crystal socket, which is mounted in the chassis directly above the cathode-circuit switch. The left-hand dial controls the tuning of the oscillator plate-tank circuit; the dial to the right tunes the output tank circuit. The switch at the right-hand end is for the 200-ma. milliammeter.

nance. If it increases, the taps of C_4 should be spread slightly, while a decrease in C_3 indicates that the taps of C_4 should be brought slightly closer together. Again, each adjustment of tracking should be followed by realigning at the h.f. end of the band before making a check on the new adjustment at the l.f. end.

If coil dimensions have been followed carefully these tracking adjustments should not be required. They are described to take care of cases in which the constructor may have gone astray at some point, or in which the design has been changed to suit other requirements. Naturally, the adjustments for the higher-frequency bands must be made in smaller steps than for the lower-frequency bands.

At the plate voltages recommended, the screen current, when lining up the v.f.o. output stage, should run between 5 and 10 ma. Cathode current to the driver stage when tuned and loaded should be between 70 and 100 ma., while grid current to the final amplifier should exceed 50 ma. with the amplifier loaded to the rated plate current of 300 ma. at 1500 volts. The driver screen voltage should run close to 250 volts. When correctly adjusted, the output across any of the three bands should remain constant at 300 watts.

The tables of Chapter Twenty-One should be consulted if other tubes are used in the final.

¶ Complete Variable-Frequency Gang-Tuned Transmitter

Fig. 1264 shows the two units of Figs. 1251 and 1261 combined for gang tuning. The voltage-regulated supply of Fig. 1257 may be used to furnish screen voltage for the 807 by bringing out a tap from the junction of resistors R_1 and R_2. The unit of Fig. 1247 will furnish biasing voltages for both 807 and final amplifier. The voltage-divider resistance of the bias unit should be adjusted with 4000 ohms in the R_2 portion and 4000 ohms in the R_3 portion. Plate voltage for the 807 may be obtained from the unit of Fig. 1238, while the unit of Fig. 1246 will furnish plate voltage for the amplifier. A suitable antenna tuner is shown in Fig. 1249.

¶ A Two-Tube Plug-In Coil Exciter

In the two-tube exciter or low-power transmitter shown in Figs. 1265, 1266 and 1268, a 6L6 oscillator is used to drive an 807 as an amplifier-doubler. As shown in Fig. 1267, a Tri-tet circuit, used to obtain harmonic output, is reduced to a simple tetrode circuit for oscillator output at the crystal fundamental by short-circuiting the cathode tank circuit. Sufficient oscillator output at the fourth harmonic of the crystal frequency is obtainable to drive the 807, which may be operated as either a straight amplifier or frequency doubler, providing output of 25 to 50 watts or more in four bands from a single crystal.

The entire unit is designed to operate from a single 250-ma. power supply delivering up to 750 volts (see Fig. 1239), the maximum rating for the 807. Fixed bias of 45 volts, which may be obtained from a dry battery, is required for the 807. In the system shown, both oscillator and amplifier are keyed simultaneously in the common cathode lead. A single 200-ma. milliammeter may be switched to read the plate current of either stage.

Tuning — Because it is possible to double or quadruple frequency in the plate circuit of the oscillator and to double in the plate circuit of the 807, as well, there are several possible combinations of coils and crystals which will produce the same output frequency. Since much better efficiencies are obtainable, it is advisable to operate the 807 as a straight amplifier rather than as a doubler. This is possible in all cases except where it is necessary to obtain output at the eighth harmonic of the crystal frequency — 14-Mc. output from a 1.75-Mc. crystal, or 28-Mc. output from a 3.5-Mc. crystal. The accompanying chart shows the combination required for the desired output from any given crystal. This chart also indicates the position for SW_1. Be sure that the harmonics of the crystal frequency fall in the band in which operation is to occur.

With the proper coils and crystal in place, SW_1 in the correct position and both con-

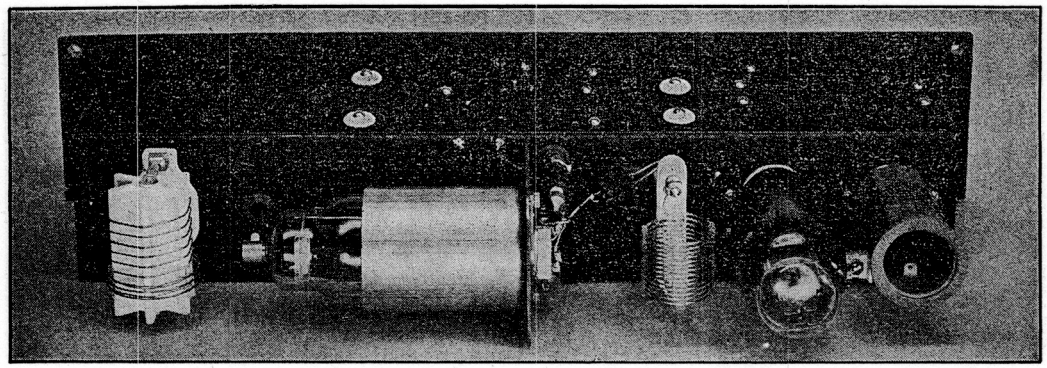

Fig. 1266 — The four-prong socket for the cathode coil, the octal socket for the 6L6 oscillator and the five-prong socket for the Coto coils used in the output tank circuit are sub-mounted along the rear of the chassis. The mounting for the National AR coils used in the oscillator plate circuit is fastened on short cone insulators, while the socket for the 807 is sub-mounted in the small steel partition. The grid r.f. choke and screen and cathode by-pass condensers are fastened directly to the socket. Large clearance holes lined with grommets are provided for passing the connections through the chassis from the oscillator plate coil to the tank condenser and for the 807 plate lead. A pair of pin jacks serves as the link output terminals. Power-supply connections are made to a terminal strip at the right.

densers set at minimum capacity (100 on the dial), the plate voltage should be applied with the meter reading plate current to the 807. If all resistances are correct and the plate voltage is 750, the plate current should run approximately 25 ma. With the key closed, tune the oscillator tank condenser for maximum amplifier plate current. (Do not hold the key closed for long periods under this high-current condition.) As soon as the peak has been obtained, tune the amplifier plate tank condenser for resonance as indicated by a pronounced dip in plate current. Should the points of response on either condenser be found at points on the scale differing appreciably from those given in the accompanying table, each circuit should be checked with an absorption frequency meter to make sure that it is tuned to the correct fre-

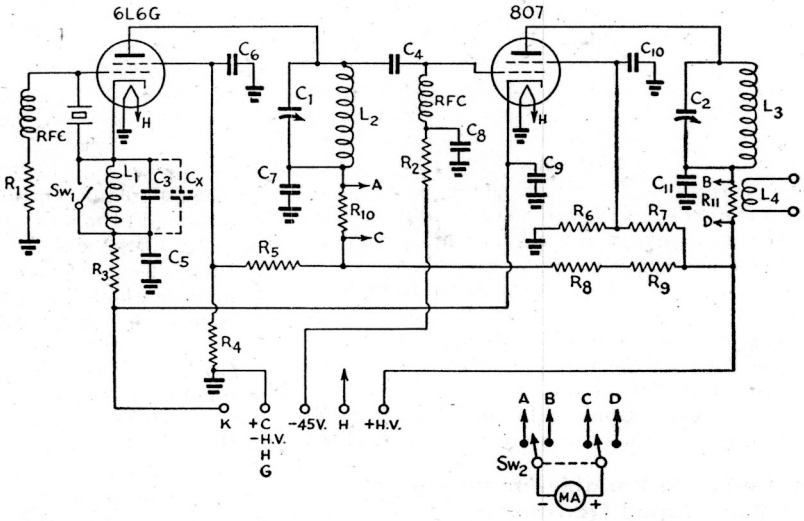

Fig. 1267—Circuit diagram of the two-tube plug-in coil exciter.

C_1 — 140-$\mu\mu$fd. variable (Hammarlund MC-14M).
C_2 — 150-$\mu\mu$fd. variable (Cardwell MR150BS).
C_3 — 100-$\mu\mu$fd. mica.
C_4 — 20-$\mu\mu$fd. mica.
C_5, C_6, C_7, C_8, C_9, C_{10} — 0.01-μfd., 600-volt paper.
C_{11} — 0.01-μfd. 1000-volt paper.
C_x — 100-$\mu\mu$fd. mica (used only on 3.5 Mc.)
MA — Milliammeter, 0–200-ma.
R_1 — 20,000 ohms, 1-watt.
R_2 — 25,000 ohms, 2-watt.
R_3 — 200 ohms, 2-watt.
R_4 — 10,000 ohms, 25-watt.
R_5 — 3500 ohms, 25-watt.
R_6, R_7 — 15,000 ohms, 25-watt.
R_8, R_9 — 1250 ohms, 50-watt.
R_{10}, R_{11} — 10 ohms, 1-watt.
RFC — 2.5-mh. r.f. choke.
SW_1 — S.p.s.t. toggle switch.
SW_2 — D.p.d.t. rotary switch (Mallory 3222J).
L_1 — 1.75-Mc. crystals — 32 turns No. 22 d.s.c., close-wound.
3.5-Mc. crystals — 10 turns No. 22 d.s.c., 1 inch long. Note: *Cx* mounted in form.
7-Mc. crystals — 6½ turns No. 22 d.s.c., ¾-inch long.
All wound on Hammarlund 1½-inch diam. 4-pin forms.

L_2 — 1.75 Mc. — 56 turns, 1¼-inch diameter, 1¾ inches long, 54 μhys. (National AR80 — no link).
3.5 Mc. — 28 turns, 1¼-inch diameter, 1½ inches long, 15 μhys. (National AR40 — no link).
7-Mc. — 14 turns, 1¼-inch diameter, 1¼ inches long, 4.2 μhys. (National AR20 — no link).
14 Mc. — 8 turns, 1¼-inch diameter, 1½ inches long, 1.25 μhys. (National AR10 — no link).
28 Mc. — 4 turns, 1¼-inch diameter, ¾-inch long, 0.5 μhy. (National AR10, 4 turns removed — no link).

L_3 — 1.75 Mc. — 50 turns, 1½-inch diameter, 2⅛ inches long, 52 μhys. (Coto CS6160E).
3.5 Mc. — 25 turns, 1½-inch diameter, 1⅝ inches long, 16 μhys. (Coto CS6?0E).
7 Mc. — 16 turns, 1½-inch diameter, 1⅞ inches long, 5.7 μhys. (Coto CS640E).
14 Mc. — 8 turns, 1½-inch diameter, 1⅝ inches long, 1.5 μhys. (Coto CS620E).
28 Mc. — 4 turns, 1½-inch diameter, 1½ inches long, 0.7 μhy. (Coto CS610E).

COIL AND TUNING TABLE FOR TWO-TUBE PLUG-IN COIL EXCITER

Xtal Band Mc.	*Output Band Mc.*	SW_1	L_1 *Band Mc.*	C_1L_2 *Band Mc.*	C_2L_3 *Band Mc.*	C_1*	C_1*
1.75	1.75	Closed	1.75	1.75	1.75	10	10
1.75	3.5	Open	1.75	3.5	3.5	10	30
3.5	3.5	Closed	3.5	3.5	3.5	10	30
1.75	7	Open	1.75	7	7	20	50
3.5	7	Open	3.5	7	7	20	50
7	7	Closed	7	7	7	20	50
1.75	14	Open	1.75	7	14	20	70
3.5	14	Open	3.5	14	14	35	70
7	14	Open	7	14	14	35	70
3.5	28	Open	3.5	14	28	35	80
7	28	Open	7	28	28	75	80

* Approximate settings for low-frequency ends of bands with dial reading zero at full capacity of condenser.

quency, since the ranges covered by some of the coils include odd harmonics falling outside the amateur bands. Once checked, the dial settings can be logged for quick resetting.

When the amplifier has been tuned, the meter switch may be set to read oscillator plate current and the oscillator tank circuit tuned for minimum plate current consistent with satisfactory keying. Active crystals usually will oscillate continuously in the Tri-tet circuit, regardless of the setting of the tank condenser. With the tetrode circuit, however, the circuit will oscillate only within relatively narrow limits. SW_1 must be closed when the oscillator plate circuit is tuned to the crystal frequency. The oscillator plate current will vary widely, depending upon whether output is taken at the fundamental, second harmonic or fourth harmonic. At the specified plate voltage, it should run between 40 and 50 ma. with the plate circuit tuned to the crystal fundamental or second harmonic. When tuned to the fourth harmonic, the plate current will normally run between 85 and 95 ma.

Because the plate and screen of the 6L6 are operated from a voltage divider, their voltages vary with tuning. Plate voltage varies between 400 and 450, except at the fourth harmonic when it falls to 340 volts or so. The screen voltage varies from 280 to 210 volts.

The plate current should be limited to 70 ma. at 28 Mc. and 80 ma. at 14 Mc. when doubling frequency in the output stage, and to 90 ma. when operating the 807 as a straight amplifier at 28 Mc. Power output under these conditions should average 40 to 55 watts on all bands. When doubling frequency in the output circuit to 14 and 28 Mc., the output will be reduced to about 27 and 18 watts respectively.

If the exciter is operated from a power supply of lower voltage, the values of resistance specified for the voltage dividers may be altered to increase the voltages on the oscillator plate and screen and also the screen of the 807. With a 600-volt supply, R_8 and R_9 should be 1000 ohms each, R_4, 20,000 ohms, and R_5, 10,000 ohms. Power output will average 30 to 35 watts from the 807 as a straight amplifier.

¶ Complete 75-Watt All-Band Transmitter with Plug-in Coils

If it is desired to feed the unit of Fig. 1265 into an antenna as a complete transmitter, it may be combined with the power-supply unit of Fig. 1238, which will furnish heater and plate voltages, and the antenna-tuning unit of Fig. 1215 using the large condensers. A 45-volt dry battery will be required for bias. The three units may be placed in a small table rack with a total height of only 17½ inches.

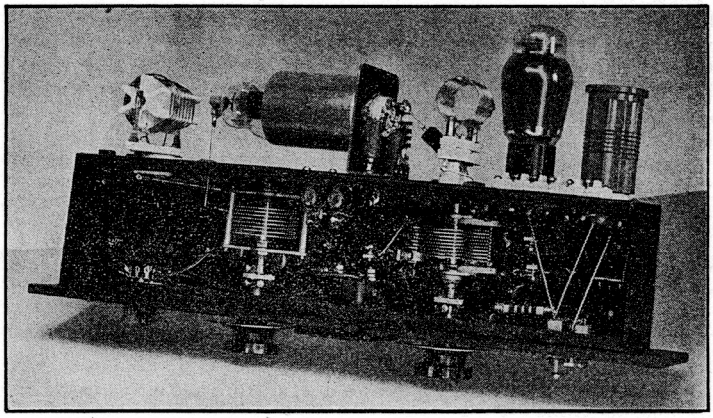

Fig. 1268 — Bottom view of the plug-in exciter. Space inside the 4 × 17 × 3-inch chassis has been utilized to the greatest extent possible while preserving accessibility. Voltage divider resistors R_8 and R_9 are to the right of the oscillator tank condenser, while R_4, R_5, R_6 and R_7 are mounted to the rear of the meter. The oscillator r.f. choke and grid leak are fastened to the crystal socket. Connections between the crystal socket and cathode switch are made directly and kept well spaced. The oscillator circuit may be arranged for v.f.o. input as shown in Fig. 1260. Meter-shunting resistances are fastened to the meter switch. Both tank-condenser shafts must be fitted with insulated couplings and panel bearings.

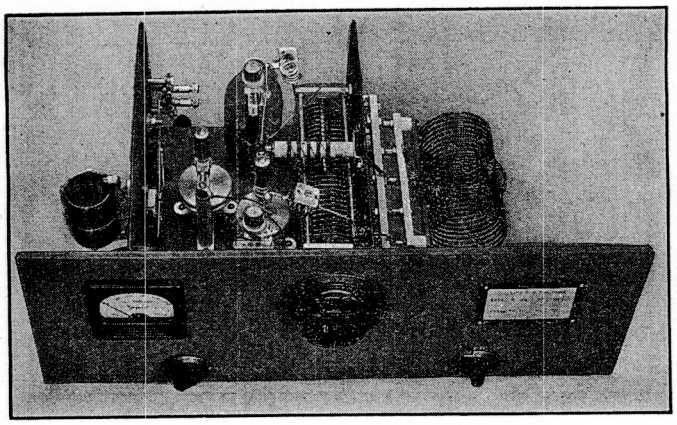

Fig. 1269 — A general view of the compact 450-watt push-pull amplifier, showing the front panel and top-of-chassis arrangement. Mounted on a standard relay rack, the height is only 7 inches and the depth 9 inches. Grid and plate tank circuits are isolated from each other by the double shielding partitions. On the panel are the 0–100 ma. milliammeter, which is switched to read current in all circuits, the plate-tank tuning dial, and a chart giving coil and tuning data. The small knob at the left below is the grid-circuit tuning control, while the one to the right is for the meter switch. The tube sockets are mounted adjacent to the stator terminals of the plate-tank condenser, C_2, in the center with the neutralizing condensers between them, providing short, leads.

A Push-Pull Amplifier for 200 to 500 Watts Input

Figs. 1269, 1270 and 1272 show various views of a compact push-pull amplifier for tubes of the 1500-volt 150-ma. class, although the design is also suitable for use with tubes of the 1000-volt 100-ma. class. With the lower plate voltages, a plate tank condenser with a spacing between plates of 0.05 inch and smaller tank coils may be used.

The circuit, shown in Fig. 1271, is quite conventional, with link coupling at both input and output. C_{11} and C_{12} are plug-in fixed air capacitors for the 1.75-Mc. band, to eliminate the necessity for an unduly large variable tank condenser to cover this one band. The tuned circuits, L_3C_6 and L_4C_5, are traps important for the prevention of v.h.f. parasitic oscillations. The 100-ma. meter may be shifted between the grid and cathode circuits for reading either grid current or cathode current. When shifted to read cathode current, the meter is shunted by a resistor, R_2, which multiplies the scale reading by five. This resistance is wound experimentally with No. 26 copper wire to give the desired scale multiplication.

Construction — The mechanical arrangement shown in the photographs results in a compact unit requiring a minimum of panel space. The tank condenser is mounted on the left-hand partition (Fig. 1270) at a height which brings its shaft down 2⅝ inches from the top of the panel. The plate tank-coil jack bar is mounted centrally with the condenser on spacers which give a ½-inch clearance between the strip and the partition. The socket for the plate padder, C_{12}, is mounted in the lower rear corner of the left-hand partition. C_{10} is mounted with a small angle on the partition under the center of C_2. Leads from both ends of the rotor shaft are brought to one side of C_{10} for symmetry.

The two tube sockets are mounted in a line through the center of the chassis and at opposite ends of the plate tank condenser. They are spaced about one inch below the chassis on long machine screws. The neutralizing condensers are placed between the two tubes, so that the leads from the plate of one tube to the grid of the other are short. The r.f. choke is mounted just above the tank condenser.

The right-hand partition is cut out at the forward edge to clear the meter. This cut-out can be readily made with a socket punch and a hacksaw. The socket for the grid tank coil is mounted 4½ inches behind the panel, just above the chassis line. The grid-circuit padder, C_{11}, is fitted with banana plugs which mount in jacks set in the right-hand partition just behind the grid coil. The jacks are insulated from the metal by being mounted in National polystyrene button insulators which have been drilled out to fit.

The grid tank condenser, C_1, is mounted under the chassis without insulation. Large clearance holes, lined with rubber grommets, are drilled for connecting wires which must be run through the chassis or partitions. The parasitic traps are made self-supporting in the plate leads from the tank condensers to the tube caps. The panel is placed so that the plate tank-condenser shaft comes at the center. The meter switch is mounted to balance the knob controlling C_1.

Power supply and excitation — The T40 tubes shown in the photographs operate at a maximum plate voltage of 1500 for c.w. work. For this, the unit shown in Fig. 1246 is suitable. The supply shown in Fig. 1248, minus the VR-tube branch, will provide the biasing voltage required for plate-current cut-off. R_2 should have a resistance of 2500 ohms and R_3 of 1500 ohms. A filament transformer delivering 7.5 volts at 5 amperes also will be required; it may be mounted on the bias-supply chassis, if desired. The exciters of Figs. 1232 or 1265 will furnish adequate excitation.

Tuning — After the amplifier has been neutralized, a test should be made for parasitic oscillation. The bias should be reduced until the amplifier draws a plate current of about 100 ma. without excitation. With C_1 adjusted to various settings, C_2 should be varied through its range and the plate current watched closely for any abrupt change. Any change will indicate

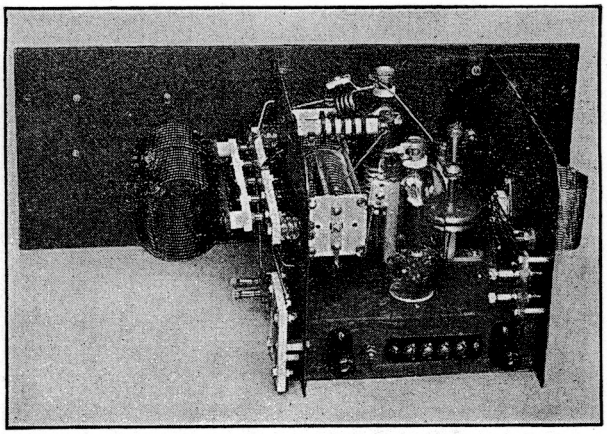

Fig 1270 — All components of the 450-watt push-pull amplifier are assembled around a small metal chassis 7 × 2 × 9 inches deep. The partitions are standard 6½ × 10-inch interstage shields. The plate tank condenser is mounted on the left-hand partition. The plate tank-coil jack-bar is mounted centrally, opposite the condenser, on spacers which give ½-inch clearance between the strip and the partition. The socket for C_{12} is mounted in the lower rear corner of the left-hand partition. C_{10} is mounted with a small angle bracket on the partition under the center of C_2. The socket for the grid tank coil is mounted just above the chassis line. The grid-circuit padder, C_{11}, is fitted with banana plugs which mount in jacks set in the partition behind the grid coil. The jacks are insulated from the metal partition by polystyrene button-type insulators. Millen safety terminals are used for the external high-voltage plate and bias connections.

oscillation, and condensers C_5 and C_6 should be adjusted in slight steps simultaneously until the oscillation disappears. Unless the wiring differs appreciably from that shown, complete suppression will be obtained with the two condensers at full capacity. Changing bands should have no effect upon this adjustment.

With normal bias replaced, the amplifier should now be tuned up and the excitation adjusted so that a grid current of 60 ma. is obtained with the amplifier fully loaded. Full loading will be indicated when the cathode-current meter registers 360 ma., which includes the 60-ma. grid current. Under these conditions the biasing voltage should rise to 150 volts, dropping to about 70 volts without excitation when the plate current will fall to almost zero.

If the amplifier is to be plate-modulated, the plate voltage should be reduced to 1250 and the loading decreased to reduce the plate current to 250 ma. The same bias-supply adjustment will be satisfactory for this type of operation but excitation may be reduced to give a grid current of 40 ma., bringing the total cathode current to 290 ma. The antenna tuner shown in Fig. 1227 or the pi-section network of Fig. 1274 may be used.

Reference should be made to the tube tables in Chapter Twenty-One for operating conditions for tubes of different characteristics.

Fig. 1271 — Circuit diagram of the 450-watt push-pull amplifier.

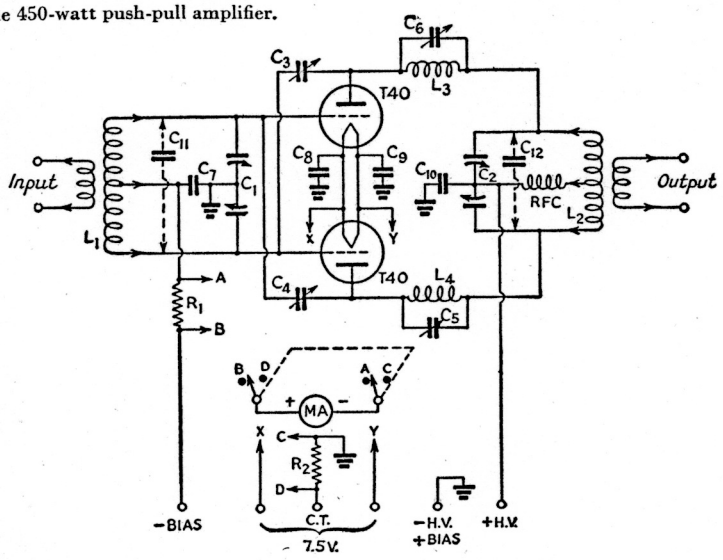

C_1 — 100-$\mu\mu$fd. per section, 0.03-inch spacing (Hammarlund HFAD-100-B).

C_2 — 100-$\mu\mu$fd. per section, 0.07-inch spacing (Hammarlund HFBD-100-E).

C_3, C_4 — Neutralizing condensers (National NC-800).

C_5, C_6 — 3-30-$\mu\mu$fd. mica trimmers (National M-30)

C_7, C_8, C_9 — 0.01-μfd. mica.

C_{10} —0.001-μfd. mica, 7500-volt rating (Aerovox 1653).

C_{11} — 50-$\mu\mu$fd. air padder (for 1.75 Mc.) 0.05-inch spacing (Cardwell EO-50-FS).

C_{12} — 50-$\mu\mu$fd. air padder (for 1.75 Mc.), 0.125-inch spacing (Cardwell JD-50-OS).

R_1 — 25 ohms, 1-watt.

R_2 — Meter-multiplier resistance for 5-times multiplication, wound with No. 26 wire.

RFC — 1-mh. r.f. choke (National R-154U).

MA — Milliammeter, 100-ma.

L_1 — B & W JCL series, dimensions as follows: *

1.75 Mc. — 60 turns No. 24, 2⅛ inches long.
3.5 Mc. — 44 turns No. 20, 2⅛ inches long.
7 Mc. — 26 turns No. 16, 2⅛ inches long.
14 Mc. — 14 turns No. 16, 1⅞ inches long (remove 2 turns from B & W coil).
28 Mc. — 6 turns No. 16, 1⅞ inches long (remove 2 turns from B & W coil).

L_2 — B & W TCL series, dimensions as follows: **

1.75 Mc. — 28 turns No. 12, 4¾-inch diameter, 4¼ inches long.
3.5 Mc. — 26 turns No. 12, 3½-inch diameter, 4½ inches long.
7 Mc. — 22 turns No. 12, 2½-inch diameter, 4½ inches long.
14 Mc. — 10 turns No. 12, 2½-inch diameter, 4¼ inches long, remove one turn from each end.
28 Mc. — 4 turns ⅛-inch copper tubing, 2½-inch diameter, 4½ inches long. Remove one turn from each end.

L_3, L_4 — 4 turns No. 14, ½-inch diameter, ¾-inch long.

* All 1½-inch diameter, 3-turn links.
** All coils fitted with 2-turn links.

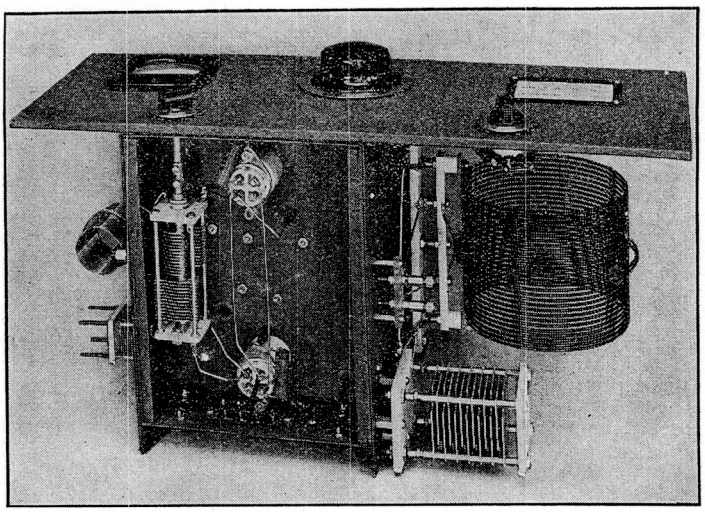

Fig. 1272 — Bottom view of the 450-watt push-pull amplifier, showing the position of the grid tank condenser between the two submounted tube sockets. The two air padding condensers, C_{11} and C_{12}, are in place for 1.75-Mc. operation.

¶ A Pi-Section Antenna Coupler

The photograph of Fig. 1274 shows the constructional details of a pi-section type antenna coupler. The wiring diagram appears in Fig. 1273. All parts are mounted directly on the panel using flathead machine screws. The condensers each are supported on three ceramic pillars from National type GS-1 stand-off insulators. A ¾-inch 6–32 machine screw is inserted in one end of each pillar and turned tight. The head of the screw is then cut off with a hacksaw and the protruding quarter-inch or so is threaded into the mounting holes in the end plate of the condenser. The shaft is cut off about ¼ inch from the frame and fitted with a Johnson rigid insulated shaft coupling (No. 252). Since the coupling will extend beyond the stand-off insulators, a ¾-inch clearance hole should be cut in the panel for each shaft. Alternatively, metal washers could be used between the panel and each pillar to extend the mounting.

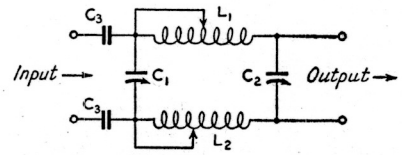

Fig. 1273 — Diagram of the pi-section antenna coupler.
C_1–C_2 — 300-$\mu\mu$fd. variable, 0.07-inch spacing (National TMC-300).
C_3 — 0.01-μfd. mica., 5000-volt rating.
L_1, L_2 — 26 turns No. 14, 2½-inch diameter, 3½ inches long (National XR10A form wound full).

Each coil form is supported on 1½-inch cone insulators. The two high-voltage blocking condensers, C_3, also are mounted on pillars from GS-1 stand-offs. A copper clip on a flexible lead connected permanently to one end of each coil serves to adjust the coil inductance by short-circuiting turns.

Output connections are made to the two terminal insulators at the right, while input connections are made to the terminals of the two voltage-blocking condensers. When single-wire output is desired, the output terminal connected to the condenser rotors is grounded and the coil in that side short-circuited by the clip and lead.

Under most circumstances the components specified will work satisfactorily with transmitters of 400 or 500 watts input, operating at plate voltages up to 1500. For higher power, the condensers should have greater spacing and the coils should be wound with No. 12 or larger wire. Couplers for lower power may be made using smaller components of equal values.

¶ Complete 300- to 400-Watt Compact Plug-In Coil Transmitter

The compact exciter and amplifier units of Figs. 1265 and 1269 may be combined as a complete transmitter. Plate and filament supply for the exciter may be obtained from the unit of Fig. 1238. Plate voltage for the amplifier may be obtained either from the unit of Fig. 1225 or that of Fig. 1246. A 7.5-volt 5-ampere filament transformer may be combined on a 5¼-inch panel with the unit of Fig. 1247 (minus the VR75–30 branch), which will furnish bias for the amplifier. A 45-volt dry battery will be required for biasing the 807.

Suitable antenna tuners are those of Figs. 1227, 1249 or 1274. The height of all units, including a 5¼-inch meter panel is 49 inches.

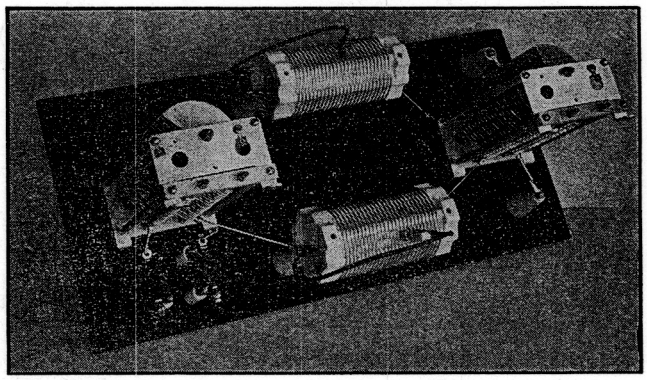

Fig. 1274 — Pi-section type antenna coupler. All parts are mounted on a Presdwood panel 8 × 19 inches. The circuit is given in Fig. 1273.

A Three-Stage 100-Watt Transmitter for Five Bands

The three-stage transmitter shown in Figs. 1275, 1277 and 1278 is designed to use a single 1000-volt 100-ma. tube such as the 1623, 809, HY40, or higher-voltage tubes at reduced ratings, in the output stage.

Referring to the circuit diagram of Fig. 1276, a 6L6, operating at a plate voltage of 400 but at reduced input, is used in the Tri-tet oscillator circuit. A potentiometer in the screen circuit provides a means of varying the screen voltage and, ultimately, the excitation to the final amplifier. The HY65 buffer-doubler circuit is capacitively

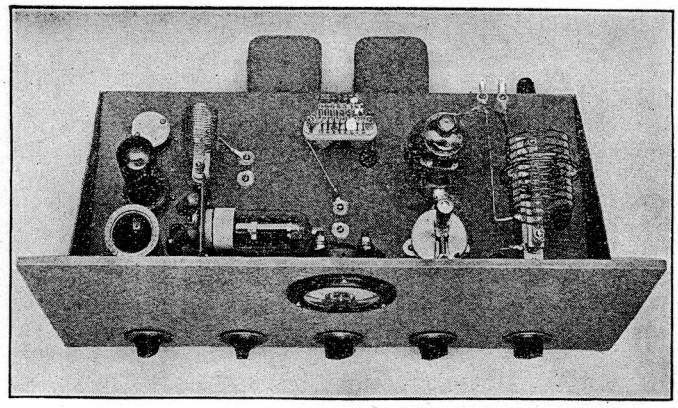

Fig. 1275 — All controls for the 100-watt five-band transmitter are below the chassis level. From left to right they are on the oscillator screen-voltage potentiometer, the oscillator plate-tank condenser, the buffer-doubler plate-tank condenser, the meter switch and the final-amplifier plate-tank condenser. The panel is of standard rack width and 8¾ inches high.

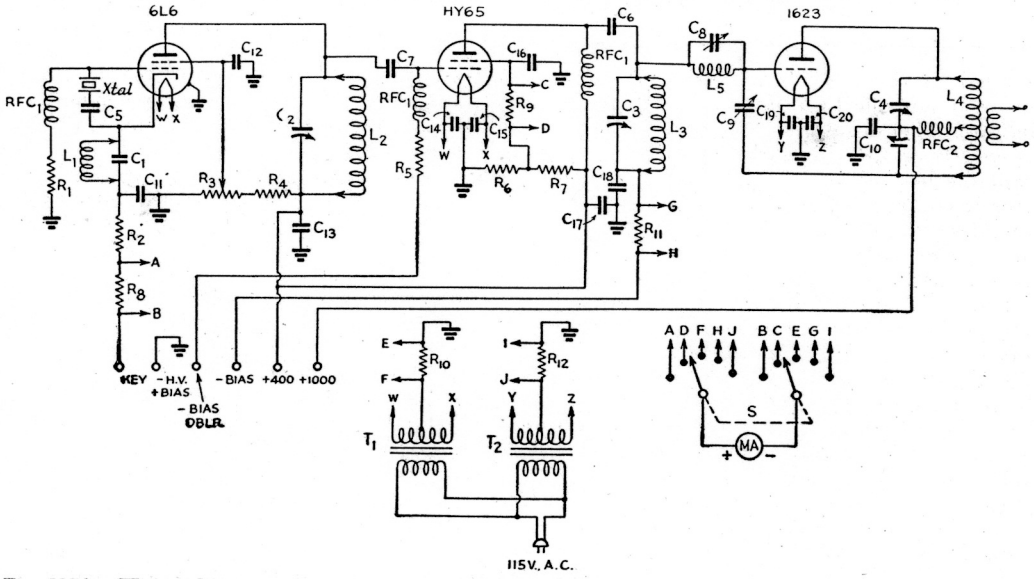

Fig. 1276 — Wiring diagram of the three-stage five-band 100-watt transmitter for 1000-volt power supply.

C_1 — 100-$\mu\mu$fd. mica.

C_2, C_3 — 150-$\mu\mu$fd. variable (National ST-150).

C_4 — 100 $\mu\mu$fd. per section, 0.05-inch spacing (Hammarlund HFBD-100-C).

C_5, C_6 — 0.001-μfd. mica.

C_7 — 100-$\mu\mu$fd. mica.

C_8 — 6–60-$\mu\mu$fd. mica trimmer (two National M-30 in parallel).

C_9 — Neutralizing condenser (National NC-800).

C_{10} — 0.001 μfd., 5000 volts test.

C_{11}, C_{12}, C_{13}, C_{14}, C_{15}, C_{16}, C_{17}, C_{18}, C_{19}, C_{20} — 0.01-μfd. mica.

R_1 — 0.1 megohm, ½-watt.

R_2 — 300 ohms, 1-watt.

R_3 — 20,000-ohm 10-watt potentiometer (Mallory E2OMP).

R_4 — 25,000 ohms, 10-watt.

R_5 — 50,000 ohms, 1-watt.

R_6 — 20,000 ohms, 10-watt.

R_7 — 10,000 ohms, 10-watt.

R_8, R_9, R_{10}, R_{11}, R_{12} — 25 ohms, 1-watt.

RFC_1 — 2.5-mh. r.f. choke.

RFC_2 — 1-mh., 300-ma. r.f. choke (National R-300U).

S — Double-gang, 5-circuit switch (Mallory 3226J).

T_1, T_2 — Filament transformer, 6.3-volt, 3 amperes (UTC S-55).

L_1 — 1.75-Mc. crystals — 32 turns No. 24 d.s.c., close-wound.
3.5-Mc. crystals — 9 turns No. 22, 1 inch long; 100-$\mu\mu$fd. mica in form, connected across winding.
7-Mc. crystals — 6 turns No. 22, ⅝-inch long.
All on Hammarlund 1½-inch diameter forms.

L_2, L_3 — 1.75 Mc. — 56 turns, 1¼-inch diameter, 1¾ inches long, 54 μhy. (National AR80, no link).
3.5 Mc. — 28 turns, 1¼-inch diameter, 1½ inches long, 15 μhy. (National AR40, no link).
7 Mc. — 14 turns, 1¼-inch diameter, 1¼ inches long, 4.2 μhy. (National AR20, no link).
14 Mc. — 8 turns, 1¼-inch diameter, 1½ inches long, 1.25 μhy. (National AR10, no link).
28 Mc. — 4 turns, 1-inch diameter, ¾-inch long, 0.5 μhy. (National AR5, turns close, no link).

L_4 — 1.75 Mc. — 40 turns No. 18, 2½-inch diameter, 2½ inches long, 78 μhy. (B & W 160 BCL). An 80-$\mu\mu$fd. fixed air padder (Cardwell JD-80-OS) is placed in right-rear corner of chassis and attached to coil with flexible leads and clips.
3.5 Mc. — 32 turns No. 16, 2½-inch diameter, 2¾ inches long, 39 μhy. (B & W 80 BCL).
7 Mc. — 20 turns No. 14, 2-inch diameter, 2½ inches long, 12 μhy. (B & W 40 BCL).
14 Mc. — 8 turns No. 14, 2-inch diameter, 2 inches long, 2.5 μhy. (B & W 20 BCL). One removed turn from each end.
28 Mc. — 4 turns No. 12, 2-inch diameter, 1¾ inches long, 0.7 μhy. (B & W 10 BCL). One turn removed from each end.

L_5 — 5 turns No. 14, ½-inch diameter, ½-inch long.

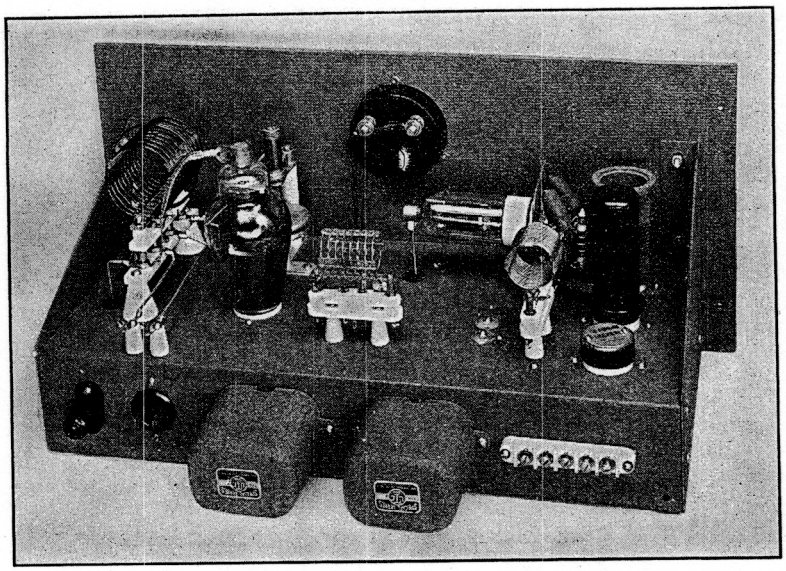

Fig. 1277 — On top of the chassis of the 100-watt transmitter, the cathode coil, L_1, the 6L6 and the crystal are in line at the right-hand end. The HY65 is mounted horizontally on a small panel which also provides mounting space for the filament and screen by-pass condensers, the coupling condenser, C_7, the grid leak, R_5, and the grid choke. L_2 is just to the left of the 6L6 and to the right of C_2 underneath. L_3 is in the center at right angles to L_2 and L_4 and just to the rear of C_3 underneath. The 1623 socket is submounted to lower the plate terminal. The neutralizing condenser, C_9, is directly in front of the tube. RFC_2 is just to the left of L_4. The two filament transformers are mounted on the rear edge.

coupled to the oscillator. This second stage makes it possible to obtain excitation for the final amplifier in a third band from a single crystal, operation in the second band being available by doubling frequency in the oscillator itself. Parallel plate feed is used in the second stage to permit series grid feed to the final amplifier, thereby avoiding the probability of low-frequency parasitic oscillations.

The neutralized final amplifier is directly coupled to the driver stage. C_8 and L_5 form a trap for v.h.f. parasitic oscillations.

The meter switch, S, shifts the milliammeter to read oscillator cathode current, driver screen current, driver cathode current, final-amplifier grid current and final-amplifier cathode current. The individual filament transformers permit independent metering of the cathode currents of the last two stages.

Power supply — This transmitter is designed to operate from the combination 1000-volt and 400-volt plate supply shown in Fig. 1280. Both fixed bias of 75 volts for the HY65 and cut-off bias for the final amplifier may be obtained from the unit shown in Fig. 1247. For the type 1623, resistors R_2 and R_3 should be 6000 ohms and 7000 ohms, respectively.

Tuning — Coils for the desired output frequency, consistent with the crystal frequency, should be plugged in the various stages, bearing in mind that frequency may be doubled in the plate circuit of the oscillator and again in the second stage, if desired. It should also be remembered that the selection of the cathode coil, L_1, depends upon the crystal frequency and not necessarily the output frequency of the oscillator, the same cathode coil being used for both fundamental and second-harmonic output from the crystal stage. Since much better efficiencies can be obtained with the HY65 operating as a straight amplifier, it is advisable to avoid doubling in this stage.

The first two stages should be tested first, with all voltages applied except the plate

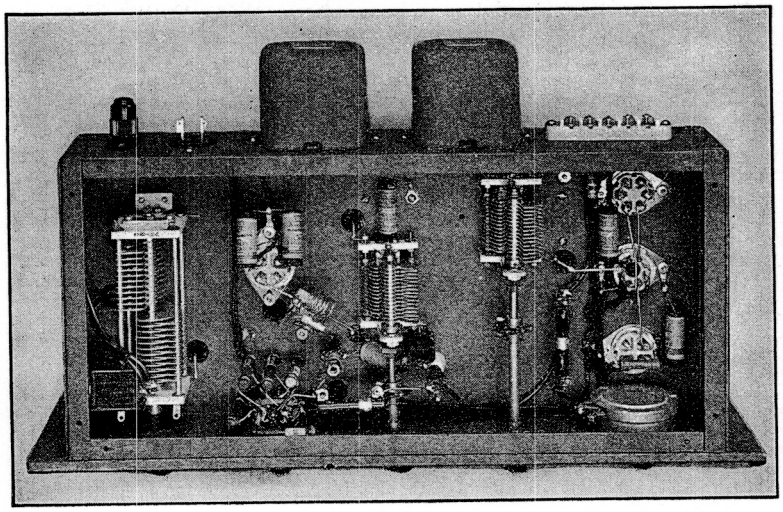

Fig. 1278 — Underneath the 8 × 17 × 3-inch chassis of the 100-watt transmitter. C_2 to the right and C_3 in the center are insulated from the chassis by polystyrene button insulators. C_4 to the left also is insulated and is spaced from the chassis to bring all shafts at the same level. Leads to the coils immediately above the tank condensers pass through large grommeted clearance holes. Meter-shunt resistances are soldered directly to the switch terminals. R_3 at the right is insulated from the chassis by extruded bakelite washers. The v.h.f. parasitic trap is suspended in the amplifier grid lead to the left of C_3. Insulating couplings are required for C_2 and C_3.

voltage for the final amplifier. Tuning the oscillator to resonance, with the key closed, should cause a slight dip in cathode current accompanied by an abrupt rise in the screen and cathode current of the second stage. Tuning the HY65 plate circuit to resonance should produce a good dip in cathode current, with a simultaneous reading of maximum grid current to the final amplifier.

The amplifier should then be neutralized and tested for parasitic oscillation. The latter is done by shifting the final-amplifier plate-voltage lead to the 400-volt tap and turning off the bias supply. No plate voltage should be applied to the exciter stages. C_4 is then varied through its entire range for several settings of C_3. If at any point a change in the final-amplifier cathode current is observed, C_3 should be adjusted to eliminate it. During this process, plate voltage should not be applied long enough to cause appreciable heating of the tube.

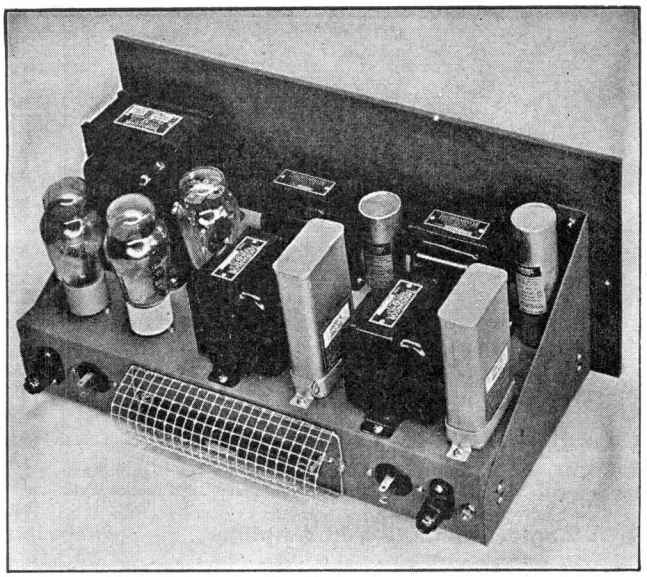

Fig. 1280 — This power supply makes use of a combination transformer and dual filter system delivering 1000 volts at 125 ma. and 400 volts at 150 ma., simultaneously. The circuit diagram is given in Fig. 1279. The 1000-volt bleeder resistance is mounted on the rear edge of the chassis, with a protective guard made of a piece of galvanized fencing material to provide ventilation. Millen safety terminals are used for the two high-voltage terminals. Ceramic sockets should be used for the 866 Jrs. The chassis measures 8 × 17 × 3 inches and the standard rack panel is 8¾ inches high.

Normal operating voltages may now be replaced and the final amplifier tuned up in the usual manner. A plate current of 100 ma. will indicate normal loading of the final amplifier. (Plate current will be the difference between grid and cathode currents under operating conditions.) With all stages tuned and the amplifier loaded normally, the oscillator cathode current should run between 16 and 30 ma., HY65 screen current between 6 and 11 ma., HY65 cathode current between 45 and 70 ma., HY65 grid voltage between 125 and 260 volts, oscillator screen voltage between 100 and 250 volts, and HY65 screen voltage between 210 and 250 volts, exact values depending upon whether the stage is operating at the fundamental or doubling frequency. Excitation should be adjusted to keep the amplifier grid current between 20 and 25 ma., when the grid voltage should measure 130 to 150 volts. Power output of 65 to 75 watts should be obtainable on all bands. The oscillator circuit may be arranged for optional v.f.o. input as shown in Fig. 1260, if desired.

If the output stage is to be plate-modulated, the plate voltage should be reduced to 750. Operating data for tubes of other types will be found in the tables of Chapter Twenty-One.

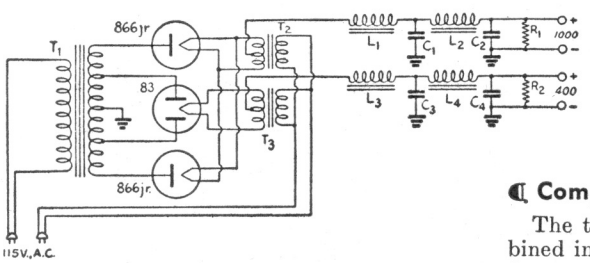

Fig. 1279 — Circuit diagram of the combination 1000- and 400-volt power supply for the 100-watt transmitter.

C_1, C_2 — 2-μfd. 1000-volt paper (Mallory TX805).
C_3 — 4-μfd. 600-volt electrolytic. (C-D) 604).
C_4 — 8-μfd. 600-volt electrolytic. (C-D 608).
L_1, L_3 — 5/20-henry swinging choke, 150-ma. (Thordarson T-19C39).
L_2, L_4 — 12-henry smoothing choke, 150-ma. (Thordarson T-19C46).
R_1 — 20,000 ohms, 75-watt.
R_2 — 20,000 ohms, 25-watt.
T_1 — High-voltage transformer, 1075 and 500 volts r.m.s. each side, 125- and 150-ma. simultaneous current rating (Thordarson T-19P57).
T_2 — 2.5 volts, 5 amperes (Thordarson T-19F88).
T_3 — 5 volts, 4 amperes (Thordarson T-63F99).

Complete 100-Watt 5-Band Transmitter

The transmitter of Fig. 1275 may be combined in a standard rack with other units to form a complete transmitter. Plate voltage for oscillator and driver as well as for the final-amplifier stage may be obtained from the duplex power supply shown in Fig. 1280. Bias voltage for both driver and final-amplifier stages may be obtained from the combination unit shown in Fig. 1247, with fixed bias for the HY65 being taken from the VR75-30 branch. A suitable antenna tuner is the one shown in Fig. 1216. The larger variable condensers should be used. The total height of the various units combined is 29¾ inches, allowing a 7-inch panel for the bias-supply unit.

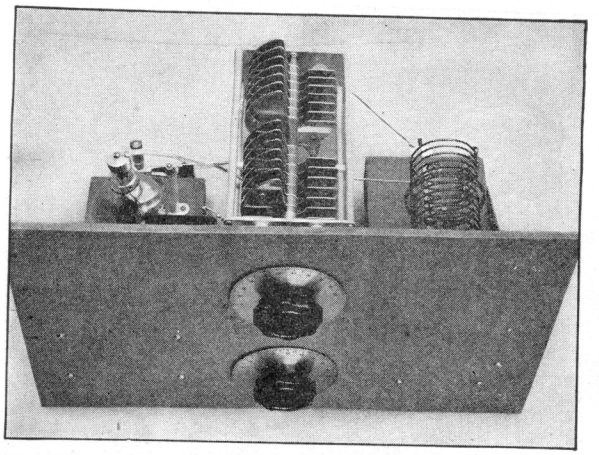

Fig. 1281 — A single-tube high-power amplifier for high-voltage inputs up to 500 watts. The standard rack panel is 12¼ inches high.

¶ A Single-Tube 500-Watt Amplifier

A single-tube amplifier which may be operated at inputs up to 500 watts at voltages as high as 3000 is shown in Figs. 1281, 1283 and 1284. The circuit, shown in Fig. 1282, is strictly conventional, with link coupling for both input and output circuits. While a type 100TH is shown in the photographs, other tubes of similar physical size and shape designed to operate at plate voltages of 3000 or less may be used in a similar arrangement.

Power supply and tuning — The plate power supply shown in Fig. 1285 may be used with this unit. Bias may be obtained from the unit shown in Fig. 1247. For this purpose, the VR75-30 branch may be omitted and a single resistor of 5000 ohms connected across the output of the pack, with the bias lead connected to the extreme negative end of the resistor.

The transmitter shown in Fig. 1275 should provide sufficient excitation. Fig. 1282 shows milliammeters connected in grid and plate leads. These meters are not included in the unit. They should be mounted on a separate well-insulated panel protected with a glass cover (see Fig. 1294).

An amplifier operating at high voltage should always, after neutralizing, be tuned up at reduced plate voltage. This may be obtained by connecting a lamp bulb in series with the primary of the plate transformer. Coupling between the exciter and the amplifier should be adjusted so that the grid current does not exceed 40 to 50 ma. with the amplifier tuned and loaded to the rated plate current of 167 ma. Power output of 225 to 300 watts should be obtainable on all bands at plate voltages from 2000 to 3000.

The tube tables of Chapter Twenty-One should be consulted for data on the operation of tubes of other types.

¶ A Push-Pull 1-Kilowatt Amplifier

The push-pull amplifier shown in the photographs of Figs. 1287, 1288 and 1289 is capable of handling a power input of 1000 watts for c.w. operation or 900 watts with plate modulation.

The circuit is shown in Fig. 1286. Plug-in coils with fixed links are used in the grid circuit, while the output-coil mounting is provided with variable link coupling. L_3C_3 and L_4C_4 form traps against v.h.f. parasitic oscillation. A multi-section plate tank condenser provides a low minimum capacity for operation at the higher frequencies and a high maximum capacity for the lower frequencies.

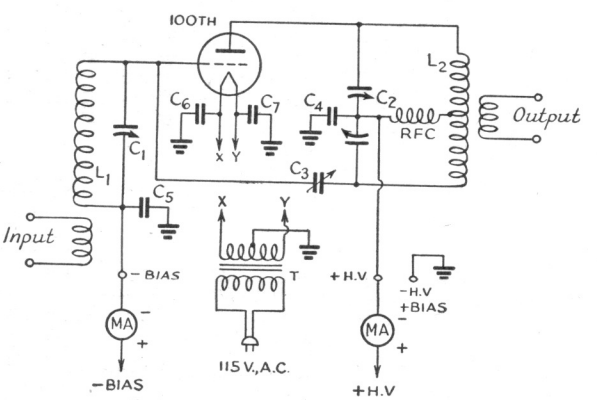

Fig. 1282 — Circuit diagram of the high-power 500-watt input single-tube amplifier.

C_1 — 250-$\mu\mu$fd. variable, 0.047-inch spacing (National TMK-250).

C_2 — 100 $\mu\mu$fd. per section, 0.171-inch spacing (National TMA-100-DA).

C_3 — Neutralizing condenser (National NC-800).

C_4 — High-voltage insulating condenser, 0.001-μfd. mica, 12,500-volt rating (Cornell-Dubilier 21A-86).

C_5, C_6, C_7 — 0.01-μfd. mica.

RFC — 1-mh. r.f. choke, 300-ma. (National R-300U mounted on GS-1 insulator).

MA_1 — Grid milliammeter, 100 ma.

MA_2 — Plate milliammeter, 300 ma.

T — Filament transformer — 5 volts, 8 amperes. (Thordarson T-19F84).

L_1 — 3.5 Mc. — 26 turns No. 16, 1½-inch diameter, 2⅛ inches long, 3-turn link (B & W JCL-40).

7 Mc. — 16 turns No. 16, 1½-inch diameter, 1⅞ inches long, 3-turn link (B & W JCL-20).

14 Mc. — 8 turns No. 16, 1½-inch diameter, 1⅞ inches long, 3-turn link (B & W JCL-10).

28 Mc. — 6 turns No. 16, 1½-inch diameter, 1½ inches long, 2-turn link (B & W JCL-10, 1 turn removed from each end).

L_2 — 3.5 Mc. — 26 turns No. 12, 3½-inch diameter, 4½-inches long, 2-turn link (B & W TCL-80).

7 Mc. — 22 turns No. 12, 2½-inch diameter, 4½-inches long, 2-turn link (B & W TCL-40).

14 Mc. — 12 turns No. 12, 2½-inch diameter, 4¼-inches long, 2-turn link (B & W TCL-20).

28 Mc. — 6 turns ⅛-inch copper tubing, 2½-inch diameter, 4½ inches long, 2-turn link (B & W TCL-10).

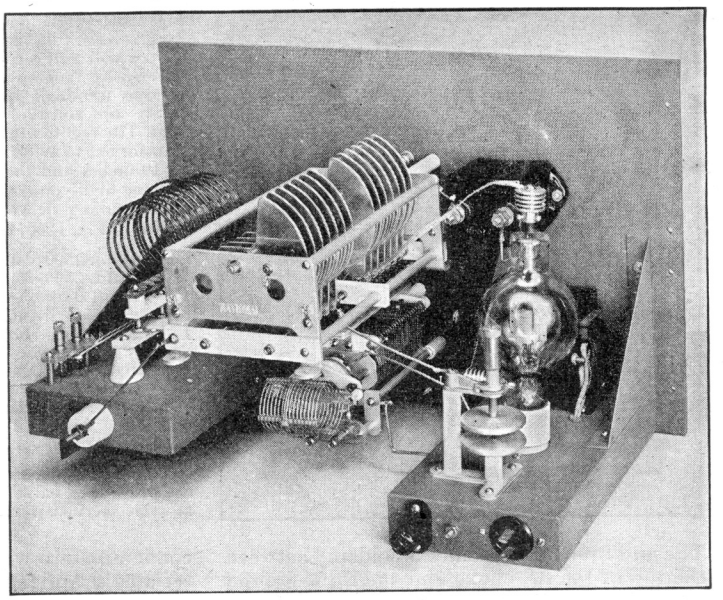

Fig. 1283 — Rear view of the high-power single-tube amplifier. The two tank condensers are mounted, one above the other, in the center of the panel by means of Isolantite pillars from stand-off insulators. Four National type GS-2 insulators are used to support the plate tuning condenser, while three type GS-1 insulators are used for the grid tuning condenser. Insulated flexible couplings and panel bearings are used on each shaft to insulate the controls. One of high break-down voltage rating should be used for the plate condenser, and *the panel bearings must be grounded!* The socket for the grid tank coil is mounted, using insulated spacers and a small metal plate as a base, on the rear end plate of C_1. Metal strips, also fastened to the end plate, support the input-link terminal strip. The insulating by-pass condenser, C_4, is mounted just to the right of C_2.

Construction — The plate-tank tuning condenser is mounted on 1¼-inch ceramic cone insulators. The rotor is grounded through a high-voltage fixed condenser at the front end of the variable-condenser frame. The shaft is cut off and is fitted with a large Isolantite flexible shaft coupling. This is important, since the rotor is at high voltage. A panel-bearing assembly is fitted in the panel. The jack bar for the plate tank coil is mounted on a pair of angle brackets fastened to the condenser end plates. Two 300-ma. r.f. chokes in parallel are used, with one connected between each condenser end plate and the center connections of the coil jack bar. The positive high voltage comes up through the chassis through a feed-through insulator at the rear of the condenser.

The grid tank condenser is mounted on ⅝-inch cone insulators topped with spacers which bring its shaft up level with that of the plate tank condenser. The two variable condensers are mounted with their shafts 3⅛ inches from the chassis edges. The jack bar for the grid tank coil is mounted on U-shaped brackets made from ½-inch brass strip, and these, in turn, are mounted on 2-inch cone insulators. The rotor of the grid tank condenser is grounded to the chassis at the center. The grid r.f. choke is mounted on a feed-through insulator carrying the biasing voltage up through the chassis.

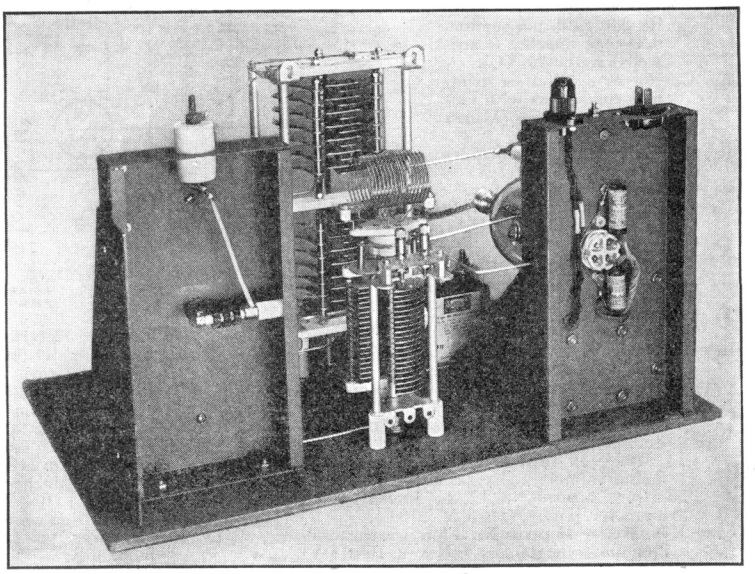

Fig. 1284 — Bottom view of the single-tube 500-watt amplifier. In the lower right-hand corner of the panel is fastened a chassis 9½ × 5 × 1½ inches, on which are mounted, in line, the filament transformer, the tube socket and the neutralizing condenser. A chassis of similar size to the left supports the plate tank coil and the output-link terminals. A large feed-through insulator in the rear edge of this chassis serves as the high-voltage terminal. In wiring the amplifier unit, the importance of well-spaced leads carrying high voltage cannot be stressed too greatly. It must be remembered that the arcing distances and break-down capabilities of voltages as high as 3000 are considerably greater than with the lower plate voltages more commonly used by amateurs.

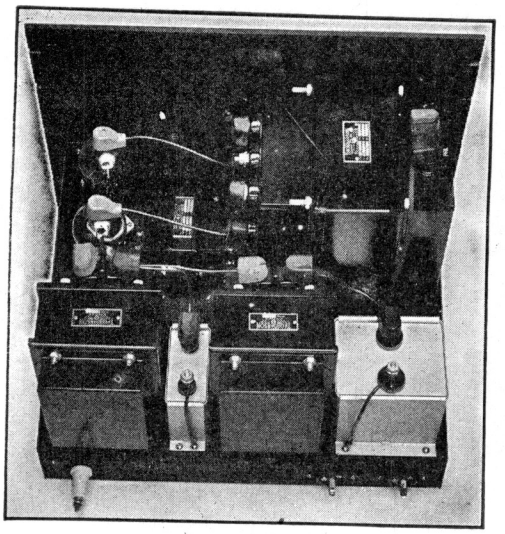

Fig. 1285 — This power supply unit delivers 2025 and 2480 volts at full-load current of 450 ma. with ripple of 0.5 per cent and regulation of 19 per cent. Voltages are selected by taps on the secondary. All exposed high-voltage terminals are covered with Sprague rubber safety caps and the tube plate terminals with moulded caps. The rectifier tubes are placed away from the plate transformer to avoid induction troubles. The panel is 14 × 19 inches and the chassis 13 × 17 × 2 inches. The exposed high-voltage terminal should be covered with a rubber-tubing sleeve. The circuit is the same as that shown in Fig. 1245, the values being as follows:

C_1 — 1-μfd. 2500-volt oil-filled (G.E. Pyranol).
C_2 — 4-μfd. 2500-volt oil-filled (G.E. Pyranol).
L_1 — Input choke, 5–20 henrys, 500 ma., 75 ohms (Thordarson T-19C38).
L_2 — Smoothing choke, 12 henrys, 500 ma., 75 ohms (Thordarson T-19C45).
R — 50,000 ohms, 200-watt.
Tr_1 — 3000–2450 volts r.m.s. each side of center, 500 ma. d.c. (Thordarson T-19P68).
Tr_2 — 2.5 volts, 10 amperes, 10,000-volt insulation (Thordarson T-64F33).

Note: The voltage regulation may be improved by the use of a lower valve of bleeder resistance, *R*, although at some sacrifice in maximum permissible load current.

The grid by-pass condenser is soldered between the top of the r.f. choke and the rotor ground connection for the condenser.

The two tubes are mounted centrally with respect to the two tank condensers, the neutralizing condensers being placed between the tubes and the grid tank condenser. The sockets for the tubes are sub-mounted beneath the chassis on ⅝-inch spacers to lower the plate terminals. The parasitic-trap condensers and coils are self-supporting and are fastened to the heat-radiating plate connectors.

The filament transformer is mounted underneath the chassis, and the filament by-pass condensers are wired in directly at the socket terminals. Millen safety terminals are provided for the positive high voltage and negative bias terminals. A male plug is set in the rear edge of the chassis for the 115-volt line connection to the filament transformer.

Power supply — A plate-supply unit suitable for this amplifier is shown in Fig. 1285. For bias, the unit shown in Fig. 1247 is suggested. The branch including the VR75-30 may be omitted and resistance values for R_2 and R_3 should be approximately 2000 and 2500 ohms, respectively. The transmitter shown in Fig. 1276 will furnish more than adequate excitation.

Fig. 1286 — Circuit diagram for the 1-kilowatt push-pull amplifier.

C_1 — 150 μμfd. per section, 0.05-inch spacing (Johnson 150FD20).
C_2 — Multi-section, max. capacity 228 μμfd. per section, 0.84-inch spacing (Cardwell XE-160-70-XQ).
C_3, C_4 — 3–30-μμfd. mica trimmer condensers with Isolantite insulation (Millen 28030).
C_5, C_6 — Neutralizing condensers (Johnson N250).
C_7 — 0.01-μfd. 600-volt paper.
C_8 — 0.001-μfd. mica, 10,000-volt rating (Aerovox 1624).
C_9, C_{10} — 0.01-μfd. paper.
RFC_1 — 2.5-mh. r.f. choke.
RFC_2 — 1-mh. 300-ma. r.f. choke (National R-300).
T_1 — 10-volt 10-ampere filament transformer (Thordarson T-19F87).
L_1 — 1.75 Mc. — 42 turns No. 14, 3 inches long, 3½-inch diameter (110 μhy.)
3.5 Mc. — 32 turns No. 16, 2¾ inches long, 2½-inch diameter (40 μhy.) (B & W 80BL).
7 Mc. — 20 turns No. 14, 2½ inches long, 2-inch diameter (12 μhy.) (B & W 40BL).
14 Mc. — 10 turns No. 14, 2½ inches long, 2-inch diameter (3 μhy.) B & W 20BL).
28 Mc. — 6 turns No. 12, 2½ inches long, 2-inch diameter (1 μhy.) (B & W 10BL).
L_2 — 1.75 Mc. — 48 turns No. 14, 6¾ inches long, 3½-inch diameter (90 μhy.) (B & W 160HDVL).

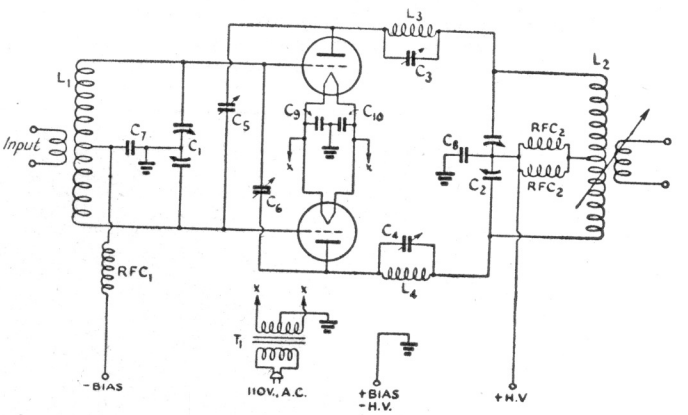

3.5 Mc. — 32 turns No. 10, 6¾ inches long, 3½-inch diameter (40 μhy.) (B & W 80HDVL).
7 Mc. — 20 turns No. 8, 6¾ inches long, 3½-inch diameter (15 μhy.) (B & W 40HDVL).
14 Mc. — 8 turns No. 8, 4¾ inches long, 3½ inch diameter (3 μhy.) (B & W 20HDVL with one turn removed from each end).
28 Mc. — 4 turns 3/16-inch copper tubing or No. 4 wire, 5¼ inches long, 2⅜-inch inside diameter (0.8 μhy.) (B & W 10HDVL with one turn removed from each end).
L_3, L_4 — 6 turns No. 12, ½-inch inside diameter, ¾-inch long.

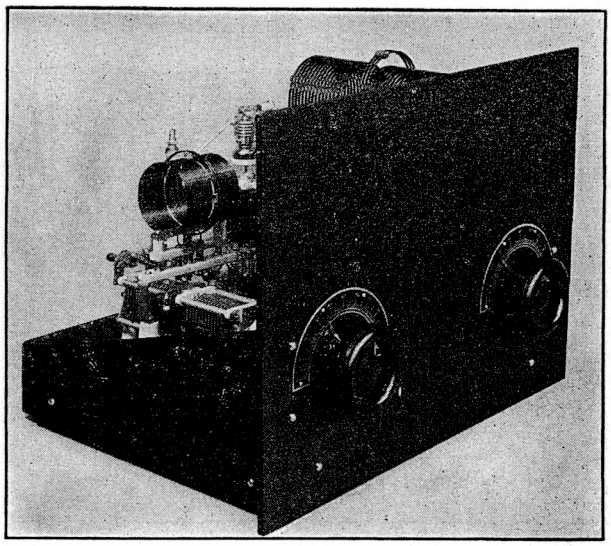

Fig. 1287 — The panel for the 1-kilowatt push-pull amplifier is 14 inches high and 19 inches wide. The chassis size is 13 × 17 inches.

Tuning — The only departure from ordinary procedure in tuning is that of adjusting the parasitic traps. The trap condensers, C_3 and C_4, should be set near maximum capacity, but not screwed up tight. After the amplifier has been neutralized, a bias voltage of about 22½ volts should be applied to the grid and the plate voltage applied through a 2500-ohm series resistance. With a pair of coils for any band plugged in, the plate current should not vary with any setting of the grid or plate condensers. If the plate current changes suddenly at any point, the trap condensers should be adjusted equally until the change disappears. The trap condensers should be set as near to maximum capacity as is possible consistent with parasitic suppression. If the r.f. wiring has been carefully duplicated, the initial adjustment of the parasitic traps as described above should be sufficient.

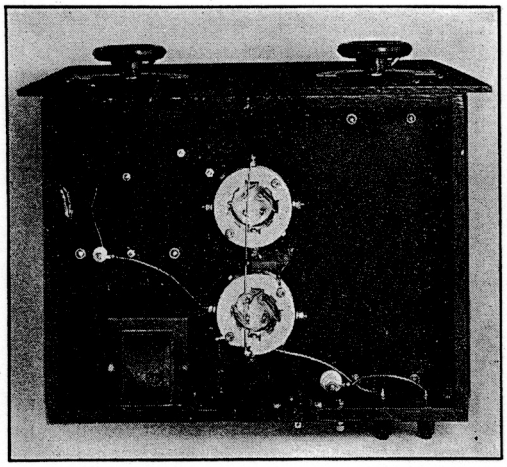

Fig. 1288 — The tube sockets in the 1-kilowatt amplifier are sub-mounted. The filament transformer is mounted close to the sockets.

After the above adjustment is complete, excitation may be applied and the amplifier loaded. The high-capacity sections of the plate tank condensers are required only for the 3.5-Mc. band.

Grid current should run about 100 ma. on all bands, and the amplifier may be loaded until the plate current increases to 500 ma. The power output at 2000 volts on the plates should be approximately 750 watts.

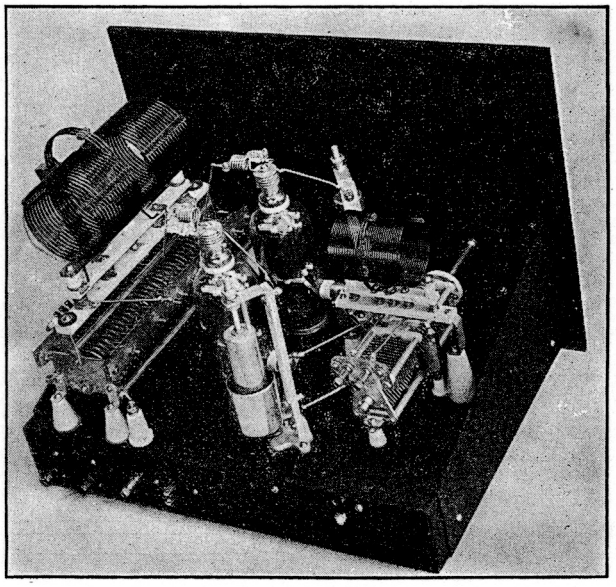

Fig. 1289 — Rear view of the 1-kw. amplifier, showing wiring and the placement of parts.

¶ Complete High-Power Transmitters

The 100-watt transmitter of Fig. 1275 may be used as a driver for either of the high-power amplifiers in Figs. 1281 and 1287. In addition to the power-supply units of Figs. 1247 and 1280 required for the exciter, a bias supply for the high-power amplifier will be necessary. A second unit similar to that of Fig. 1247, minus the VR-tube branch, will be satisfactory. Plate voltage for either amplifier may be obtained from the unit shown in Fig. 1285. The antenna tuner may be the one shown in Fig. 1249, with a condenser of 0.1-inch plate spacing and coils of higher power rating.

Using the amplifier of Fig. 1281, the combined heights of all units will be 66½ inches. If the push-pull amplifier of Fig. 1286 is used, the total height will be 68¼ inches.

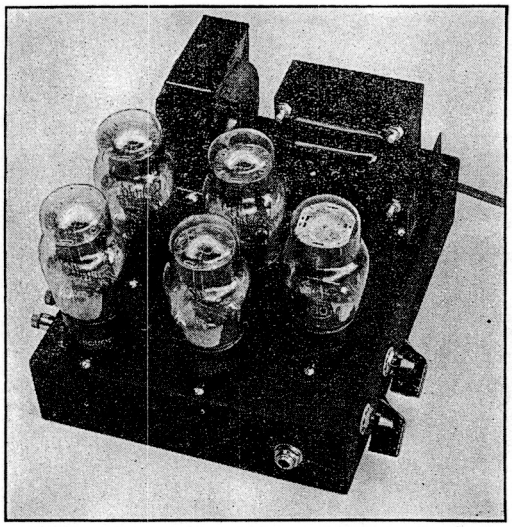

Fig. 1290 — A vacuum-tube keyer, built up on a 7 × 9 × 2-inch chassis with space for four or more keyer tubes and the power-supply rectifier. The resistors and condensers which produce the lag are mounted underneath, controlled by the knobs at the right. The jack is for the key, while terminals at left are for the keyed circuit.

A Practical Vacuum-Tube Keyer

Fig. 1290 shows a practical vacuum-tube keyer unit. The circuit diagram is shown in Fig. 1291. T_1, the rectifier, with C_1 and R_1 form the power-supply section for producing the blocking voltage necessary for cutting off the keyer tubes. With only R_2 in the circuit and Sw_2 in the open position, there will be no lag. As Sw_2 is turned to introduce more capacity in the circuit, the keying characteristic is "softened" at both make and break. Adding resistance by turning Sw_1 to the right affects the "break" only. The use of high resistances and small capacities results in small demand on the power supply and makes the key safe to handle.

As many 45s may be added in parallel as desired. The voltage drop through a single tube varies from 90 volts at 50 ma. to 52 volts at 20 ma. Tubes in parallel will reduce the drop in proportion to the number of tubes. If rated voltage is important in the operation of the keyed circuit, the drop through the keyer tubes must be taken into account and the transmitter voltage boosted to compensate for the drop.

If desired, more degrees of lag can be obtained by using a rotary switch with more points and additional resistors and condensers. Suggested values of capacity, in addition to C_2 and C_3, are 0.001 and 0.002 μfd. From R_2, resistors of 2, 3 and 5 megohms may be added.

When connecting the output terminals of the keyer to the circuit to be keyed, care must be used to connect the grounded output terminal to the negative side of the keyed circuit.

Rack Construction

Most of the units described in the constructional chapters of this *Handbook* are designed for standard rack mounting. The assembly of a selected group of units to form a complete transmitter is, therefore, a relatively simple matter. While standard metal racks are available on the market, many amateurs prefer to build their own less expensively from wood. With care, an excellent substitute can be made.

The plan of a rack of standard dimensions is shown in Fig. 1292. The rack is constructed entirely of 1 × 2-inch stock of smooth pine, spruce or redwood, with the exception of the trimming strips, *M*, *N*, *O* and *P*. Since the actual size of standard 1 × 2-inch stock runs appreciably below these dimensions, a much sturdier job will result if pieces are obtained cut to the full dimensions.

The two main vertical supporting members are each comprised of two pieces (*A* and *B*, and *I* and *J*) fastened together at right angles. Each pair of pieces is fastened together by No. 8 flathead screws, counter-sunk.

Before fastening these pairs together, pieces *A* and *J* should be made exactly the same length and drilled in the proper places for the mounting screws, using a No. 30 drill. The length of pieces *A*, *J*, *B* and *I* should equal the total height of all panels required for the transmitter plus *twice* the sum of the thickness and width of the material used. If the dimensions of the stock are exactly 1 × 2 inches, then 6 inches must be added to the sum of the panel heights. An inspection of the top and bottom of the rack in the drawing will reveal the reason for this. The first mounting hole should come at a distance of ¼ inch plus the sum of the thickness and width of the material from either end of pieces *A* and *J*. This distance will be 3¼ inches for stock exactly 1 × 2 inches. The second hole will come 1¼ inches from the first, the third ½ inch from the second, the fourth 1¼ inches from the third and so on, alternating spacings between ½ inch and 1¼ inch (see detail drawing D, Fig. 1292). All holes should

Fig. 1291 — Wiring diagram of the practical vacuum-tube keyer unit and power supply shown in Fig. 1290.

C_1 — 2-μfd. 600-volt paper.
C_2 — 0.003-μfd. mica
C_3 — 0.005-μfd. mica.
R_1 — 0.25 megohm, 1-watt.
R_2 — 50,000 ohms, 10-watt.
R_3, R_4 — 5 megohms, 1-watt.
R_5 — 0.5 megohm, 1-watt.
Sw_1, Sw_2 — 3-position 1-circuit rotary switch.
T_1 — 325–0–325 volts, 5 volts and 2.5-volts (Thordarson T-13R01).

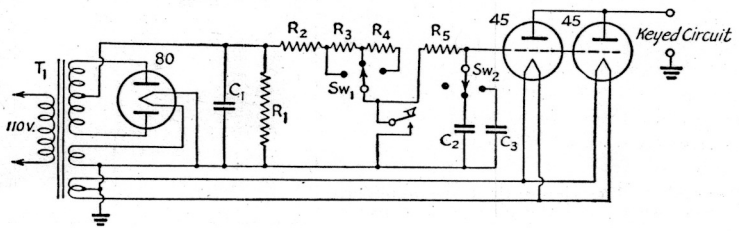

be placed ⅜ inch from the inside edges of the vertical members.

The two vertical members are fastened together by cross-member *K* at the top and *L* at the bottom. These should be of such a length that the inside edges of *A* and *J* are exactly 17½ inches apart at all points. This will bring the lines of mounting holes 18¼ inches center to center. Extending back from the bottoms of the vertical members are pieces *G* and *D* connected together by cross-members *L*, *Q* and *E*, forming the base. The length of the pieces *D* and *G* will depend upon space requirements of the largest power supply unit which will rest upon it. The vertical members are braced against the base by diagonal members *C* and *H*. Rear support for heavy units placed above the base may be provided by mounting angles on the insides of *C* and *H*, or by connecting them with cross-members at suitable heights as shown at *F*.

To finish off the front of the rack pieces of ¼-inch oak strip (*M*, *N*, *O*, *P*) are fastened around the edges with small-head finishing nails. The heads are set below the surface and the holes plugged with putty or plastic wood. The top and bottom edges of *O* and *P* respectively should be ¼ inch from the first mounting holes and the distance between the inside edges of the vertical strips, *N* and *P*, 19$\frac{1}{16}$ inches.

To prevent the screw holes from wearing out when panels are changed frequently, ½ × $\frac{1}{16}$ or $\frac{1}{32}$-inch iron or brass strip may be used to back up the vertical members of the frame.

The outside surfaces should be sandpapered thoroughly and given one or two coats of flat black, sandpapering between coats. A finishing surface of two coats of glossy black "Duco" is then applied, again sandpapering between coats. It is important to allow each coat to dry thoroughly before applying the next, or sandpapering.

Since the combined weights of power supplies, modulator equipment, etc., may total to a surprising figure, the rack should be provided with rollers or wheels so that it may be moved about when necessary after the transmitter has been assembled. Ball bearing roller-skate wheels are excellent for the purpose.

Standard chassis are 17 inches wide. Standard panels are 19 inches wide and multiples of 1¾ inches high. Panel mounting holes start with the first one ¼ inch from the edge of the panel, the second 1¼ inches from the first, the third ½ inch from the second, the fourth 1¼ inches from the third, and the distances between holes from there on alternated between ½ inch and 1¼ inches. (See detail D, Fig. 1292.) In a panel higher than two or three rack units (1¾ inch), it is common practice to drill only sufficient holes to provide a secure mounting. All panel holes come ⅜ inch from either edge.

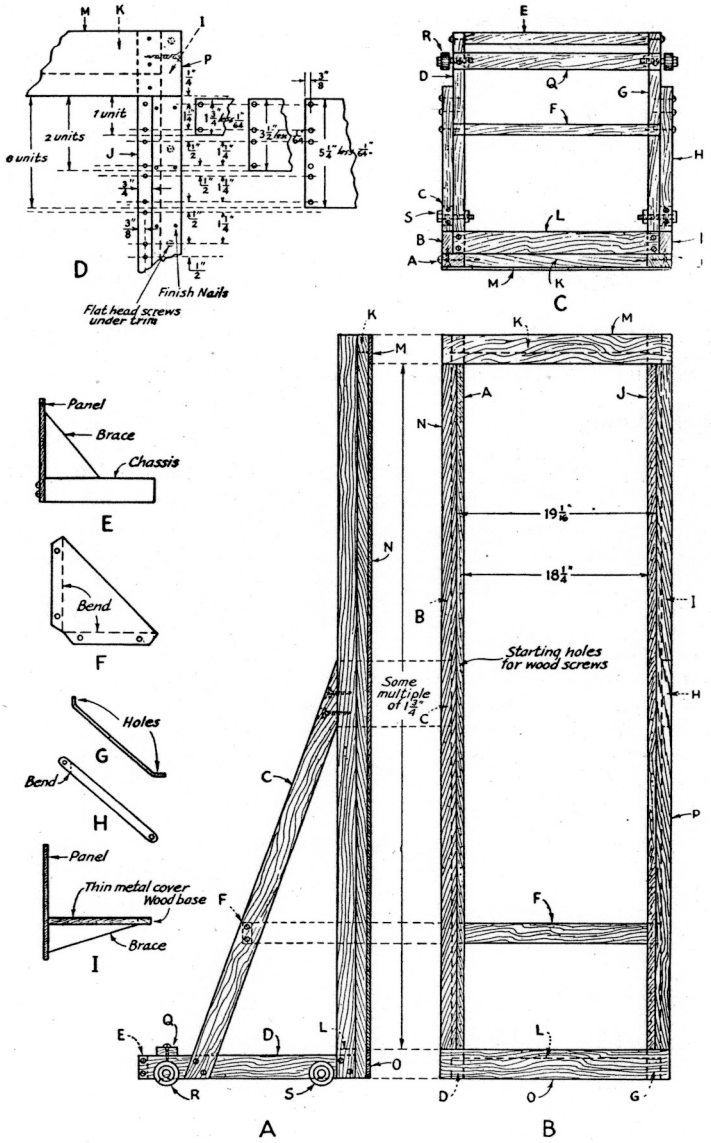

Fig. 1292 — The standard rack. A — Side view. B — Front view. C — Top view. D — Upper right hand corner detail. E — Panel and chassis assembly. F, G, H — Various types of panel brackets. I — Substitute for metal chassis.

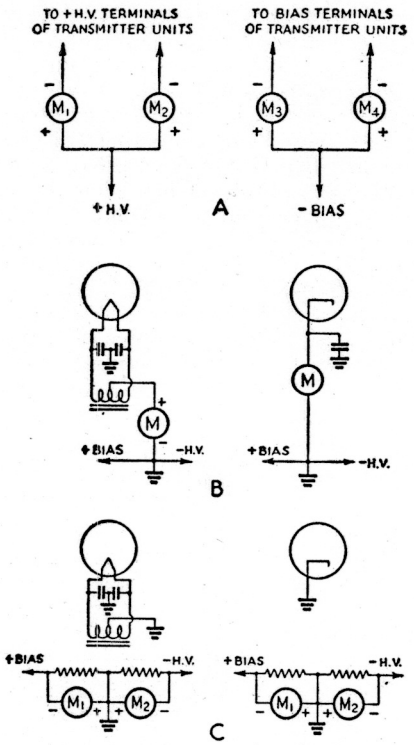

Fig. 1293 — Various methods of connecting milliammeters in grid and plate currents. A — High-voltage metering. B — Cathode metering. C — Shunt metering.

Metering

Various methods of metering are shown in Fig. 1293. A shows the meters placed in the high-voltage plate and bias circuits. M_1 and M_2 are for plate current and M_3 and M_4 for grid current. When more than one stage operates from the same plate-voltage or bias-voltage supply, each stage may be metered as shown. If this system of metering is used, the meters should be mounted so that the meter dials are not accessible to accidental contact with the adjusting screw. One method of mounting is shown in Fig. 1294, where the meters are mounted behind a glass panel.

When plate milliammeters are to be mounted on metal panels, care must be taken to see that the insulation is sufficient to withstand the plate voltage. Metal-case instruments should not be mounted on a grounded metal panel if the difference in potential between the meter and the panel is to be more than 300 volts; bakelite-case instruments can be used under similar circumstances at voltages up to 1000. At higher voltages than these an insulating panel should be used.

The placing of meters at high-voltage points in the circuit may be overcome by the use of the connections shown in Fig. 1293-B and -C. The disadvantage of the arrangements at B is that the meter reads total cathode current and the grid and plate currents cannot be metered individually. This disadvantage is overcome in C, where the meters are connected across low resistances in the grid and plate return circuits. M_1 reads grid current and M_2 plate current. The parallel resistors should have a value of not less than 10 to 20 times the resistance of the meter, and should be of sufficient power rating so that there will be no possibility of resistor burn-out. If desired, the resistance values may be adjusted to form a multiplier scale for the meter (see Chapter Nineteen). The same principle is used in the meter-switching system shown in Fig. 1295.

Meters may also be shifted from one stage to another by a plug-and-jack system, but this system should not be used unless it is possible to ground the frame of the jack or unless a suitable guard is provided around the meter jacks to make personal contact with high voltages impossible in normal use of the plug.

Control Circuits

Proper arrangement of controls is important if maximum convenience in operation is to be attained. If the transmitter is to be of fairly high power, it is desirable to provide a special service line leading directly from the public utility meter board to the operating room. This line should be run in conduit or BX cable, and the conductors should be of ample size to carry the maximum load without undue voltage drop. The line should be terminated with an enclosed entrance switch, properly fused.

Fig. 1296 shows the wiring diagram of a simple control system. It will be noticed that,

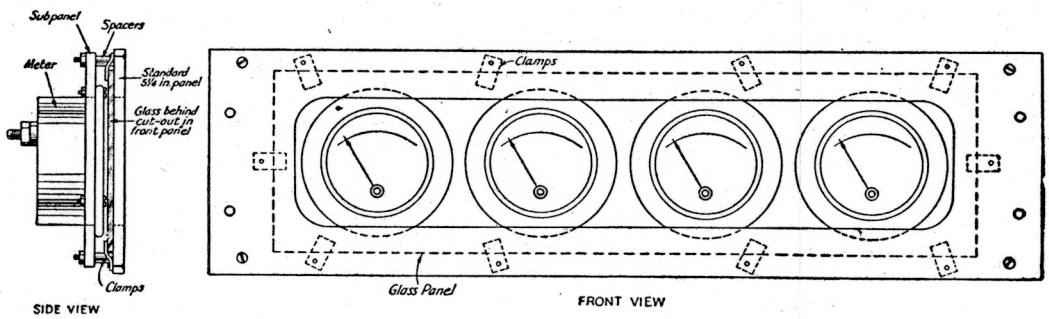

Fig. 1294 — Safety panel for meters. The meters are mounted in the usual manner on an insulating sub-panel spaced back of a glass-covered opening in the front panel. The glass is fastened in place with metal clamps or tabs, fastened to the front panel with small screws or pins. The front panel is of standard rack size, 19 × 5¼ inches.

because the control switches are connected in series, none of the high-voltage supplies can be turned on until the filament switch has been closed, and that the high-power plate supply cannot be turned on until the low-power plate supply switch has been closed. Furthermore, the modulator power cannot be applied until the final-amplifier plate voltage has been applied. SW_5 places a 100- to 300-watt lamp, L_p, in series with the primary winding of the high-voltage plate transformer for use during the process of preliminary tuning and for local c.w. work. The final amplifier should first be tuned to resonance at low voltage and SW_5 then closed, short-circuiting the lamp. Experience will determine what the low-voltage plate-current reading should be to have it increase to the full-power value when SW_5 is closed, so that the proper antenna-coupling and tuning adjustments may be made.

Preferably, SW_3 should be of the non-locking push-button type which remains closed only so long as pressure is applied. A switch of this type provides one of the simplest and most effective means of protection against accidents from high voltage. In the form which is usually considered most convenient, it consists of a switch, located underneath the operating table, which may be operated by pressure of the foot. When used in this manner the operator must be in the operating position, well removed from danger, before high voltage can be applied. If desired, SW_{3a} may be wired in parallel on the *front* of the transmitter panel, so that it can be used while tuning the transmitter. SW_{3a} also should be of the push-button type.

In more elaborate installations, and in remote control systems where the transmitter is located some distance from the operating position, similarly arranged switches may be used to control relays whose contacts serve to perform the actual switching at the transmitter.

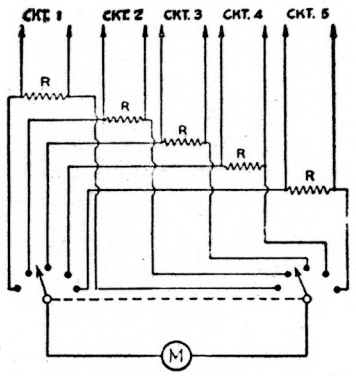

Fig. 1295 — Method of switching a single milliammeter to various circuits with a two-gang switch. The control shaft should be well insulated from the switch contacts, and should be grounded. The resistors, *R*, should have values of resistance ten to twenty times the internal resistance of the meter; 20 ohms will usually be satisfactory.

Two strings of utility outlets, one on each side of the entrance switch, are provided for operation of the receiver and such accessories as the monitor, lights, electric clock, soldering iron, etc. Closing the entrance switch should close those circuits which place the station in readiness for operation. SW_2 and SW_4 are normally closed and SW_3 is normally open. When SW_1 is closed upon entering the operating room, the transmitter filaments are turned on as also is the receiver, which should be plugged into line No. 2. With SW_4 closed (as well as SW_5 and SW_6), SW_3 performs the job of turning all plate supplies on and off during successive periods of transmission and reception.

All continuously operating accessories, such as the station clock, should be plugged into line No. 1. This is so that they will not be turned off when SW_1 is opened. Line No. 1 is of use also for supplying the soldering iron, lights, etc., when it is desired to remove all voltage from the transmitter by opening SW_1.

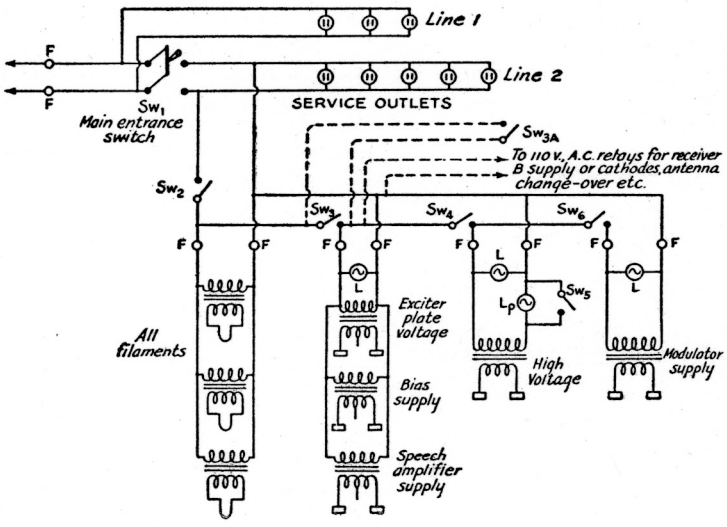

Fig. 1296 — A station control system. No high-voltage supply can be turned on until the filament switch has been closed; the high-power plate supply cannot be turned on until the low-power plate supply switch has been closed; and modulator power cannot be applied until the final-amplifier plate voltage has been applied. With all switches except SW_3 closed, SW_3 serves as the main control switch. SW_1 — Enclosed entrance switch. SW_2 — Filament switch. SW_3 — Low plate voltage and main control switch, preferably of the push-button type which remains closed only so long as pressure is applied. SW_4 — High plate-voltage switch. SW_5 — Low-power and tune-up switch short-circuiting L_p. SW_6 — Modulator plate-voltage switch. F — Fuse. L — Warning light. L_p — 100- to 300-watt voltage-reducing lamp.

CHAPTER THIRTEEN

Modulation Equipment

IN MANY respects the arrangement of components is less critical in audio than in r.f. equipment; nevertheless, certain principles must be observed if difficulties are to be avoided. The selection of suitable modulation equipment for any of the transmitters in the preceding chapter is not difficult, if the fundamental principles of modulation as described in Chapter Five are understood. If the transmitter is to be plate-modulated and the power input to the modulated stage is to be of the order of 100 watts or higher, a Class-B modulator invariably will be selected. A pair of modulator tubes of any type capable of the required power output may be used. The tables in this chapter give the necessary information on the most popular tube types. The grid driving-power requirements also are given, so that from this point on the speech amplifier tube line-up can be selected according to the principles outlined in Chapter Five.

The apparatus to be described is representative of current design practice for speech amplification, with various output levels to drive high- and low-power Class-B modulators. In some cases the power output will be sufficient to modulate low-power transmitters directly, without additional power amplification. Also, practically any of the speech amplifiers shown can be used to grid-modulate transmitters up to the highest power input permitted in amateur transmitters.

Speech-amplifier equipment, especially voltage amplifiers, should be constructed on metal chassis, with all wiring kept below the chassis to take advantage of the shielding afforded. Exposed leads, particularly to the grids of low-level high-gain tubes, are likely to pick up hum from the electrostatic field which usually exists in the vicinity of house wiring. Even with the chassis, additional shielding of the input circuit of the first tube in a high-gain amplifier usually is necessary. In addition, such circuits should be separated as much as possible from power-supply transformers and chokes and also from audio transformers operating at fairly high power levels, to prevent magnetic coupling to the grid circuit which might cause hum or audio-frequency feed-back.

If a low-level microphone such as the crystal type is used, the microphone, its connecting cable, and the plug or connector by which it is attached to the speech amplifier, all should be shielded. The microphone and cable usually are constructed with suitable shielding. The cable shield should be connected to the speech amplifier chassis, and it is advisable — as well as frequently necessary — to connect the chassis to a ground such as a water pipe. Heater wiring should be kept as far as possible from grid leads, and either the center-tap or one side of the heater transformer secondary winding should be connected to the chassis. In a high-gain amplifier the first tube preferably should be of the type having the grid connection brought out to a top cap rather than to a base pin, since in the latter type the grid lead is exposed to the heater leads inside the tube and hence will pick up more hum. With the top-cap tubes, complete shielding of the grid lead and grid cap is a necessity.

The units described in this chapter have been designed to give the required power output as simply and economically as possible, while still observing good design principles.

A 10-Watt Class-B Modulator for Low-Power Transmitters

A receiving-tube modulator, with a speech amplifier for either crystal or carbon microphones, is shown in Figs. 1301–1303, inclusive. It is suitable for modulating transmitters of 20 watts input or less, such as the low-power equipment frequently used on the very-high frequencies. Type 6A6 tubes are used throughout in the audio circuits, and an inexpensive power supply is included so that the unit is complete and ready for connection to the transmitter.

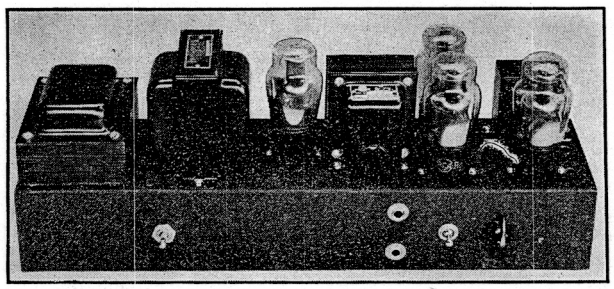

Fig. 1301 — A 10-watt audio unit complete with power supply. Three dual-triode 6A6 tubes provide a four-stage amplifier with Class-B output. Any of the popular types of microphones may be used.

Fig. 1302 shows the circuit diagram of the speech amplifier-modulator. One section of the first 6A6 is used as the input amplifier for a crystal microphone, the other half being a second speech-amplifier stage. Carbon microphones, which need less gain, are transformer-coupled to the

second section of the first 6A6. The type of jack shown at J_2 in the circuit diagram must be installed if a double-button carbon microphone is to be used. J_2 may be the same as J_1 if a single-button microphone is to be used exclusively.

The gain control is connected in the grid circuit of the second section of the first 6A6 tube, which is resistance-coupled to the driver. The driver tube, also a 6A6, has its two sections connected in parallel.

The modulation transformer specified is designed to work between 6A6 plates and a 6500-ohm load; the impedance ratio actually used will, of course, depend on the load into which the modulator will work. A milliammeter can be connected across R_1 to measure the Class-B plate current.

The power supply is of the condenser-input type. Using the components specified, it will deliver 350 volts at 90 ma. A switch in the transformer center-tap lead is used for turning the plate voltage on and off without affecting the filament supply.

The power transformer is submounted at the left end of the chassis. Next to it is the filter choke, L_1, followed by the rectifier tube and T_3, the modulation transformer. The driver tube is at the extreme right, with T_2, the driver transformer, behind it. The Class-B tube is to the rear and in line with the speech-amplifier tube. For convenience in wiring, the audio tube sockets should be mounted with the filament prongs facing the right-hand end of the chassis.

The plate-voltage switch is on the front of the chassis toward the left. The microphone switch, gain control and microphone jacks are grouped at the right.

The bottom-view photograph shows the layout for the components mounted below the chassis. T_1 is mounted at the left end. Wiring to the driver tube socket and the transformer secondary winding should be completed before the transformer is bolted in place, as it is difficult to reach the connecting points with a soldering iron afterwards. Short leads between

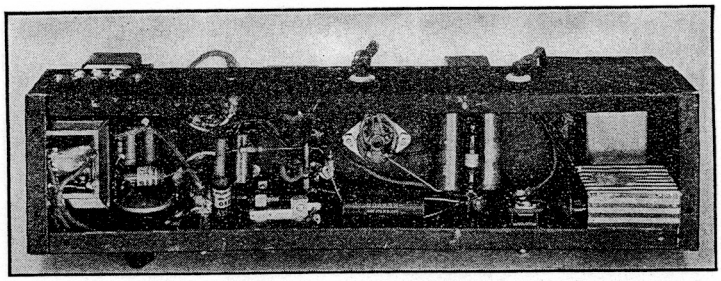

Fig. 1303 — The below-chassis wiring is visible in this view of the 10-watt modulator. The microphone input leads are kept short to reduce hum pick-up.

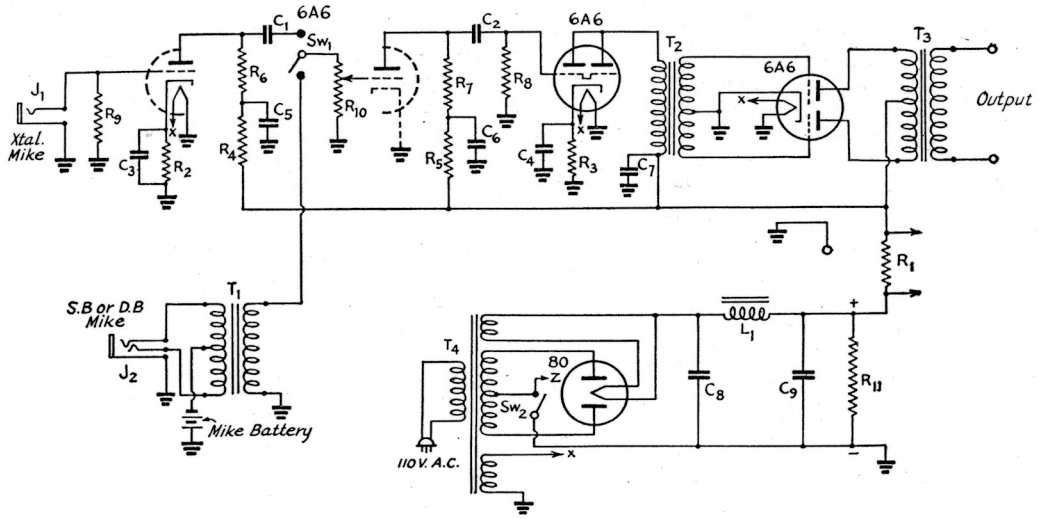

Fig. 1302 — Circuit diagram of the complete 10-watt Class-B audio modulator system for low-power transmitters.

C_1, C_2 — 0.1-μfd. 600-volt paper.
C_3, C_4 — 10-μfd. 50-volt electrolytic.
C_5, C_6, C_7, C_8, C_9 — 8-μfd. 450-volt electrolytic.
R_1 — 25 ohms, ½-watt.
R_2, R_3 — 900 ohms, 1-watt.
R_4, R_5 — 50,000 ohms, ½-watt.
R_6, R_7 — 0.25 megohm, ½-watt.
R_8 — 1 megohm, ½-watt.
R_9 — 5 megohms, ½-watt.
R_{10} — 500,000-ohm volume control.
R_{11} — 25,000 ohms, 10-watt.
Sw_1 — S.p.d.t. toggle switch.
Sw_2 — S.p.s.t. toggle switch (see text).
J_1 — Closed-circuit jack for crystal microphone.
J_2 — 2- or 3-circuit jack for single-button or double-button carbon microphone.
T_1 — S.b. or d.b. microphone transformer (Stancor A-4351).
T_2 — Driver transformer, parallel 6A6 plates to 6A6 Class-B (Stancor A-4216).
T_3 — Output transformer, 6A6 Class-B to 6500-ohm load (Stancor A-3845).
T_4 — Power transformer, 700-0-700 volts, 90 ma.; 5 volts at 3 amperes; 6.3 volts at 3.5 amperes.
L_1 — Filter choke, 5 henrys, 200 ma., 80 ohms (Thordarson T-67C49).

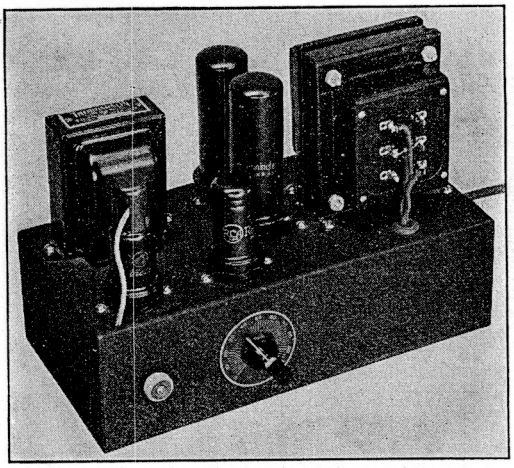

Fig. 1304 — A low-cost speech-amplifier or low-power modulator unit with a maximum audio output of 20 watts. The 6J7 is at the left near corner of the chassis, with the 6J5 to its right, just above the volume control.

the gain control, the microphone switch and the tube socket can be obtained by making the gain-control contacts face toward the switch, as shown.

The compact microphone battery (Burgess type 3A2) will be held securely in place without brackets or clips if it is wedged in between the bottom of the power transformer and the lips on the bottom of the chassis. A 3-volt battery is sufficient for most carbon microphones, and low current frequently will give better speech quality. The 115-volt a.c. and the meter leads (rubber-covered lamp cord) enter the chassis through rubber grommets. A three-contact terminal strip is located at the right end of the base (left end in the bottom view). One of the contacts is for an external ground connection and the other two are connected to the modulation-transformer output winding.

The actual measured power output of the unit shown in the photographs is 11 watts, at the point where distortion just begins to be noticeable. This order of power is ample for modulating a low-power transmitter with 20 watts or so input to the final stage.

A 20-Watt Speech Amplifier or Modulator

The amplifier shown in Figs. 1304–1306 will deliver audio power outputs up to 20 watts (from the output transformer secondary) with ample gain for ordinary communications-type crystal microphones. Class-AB 6L6s are used in the output stage, preceded by a 6J5 and 6J7.

The unit is built up on a 5 × 10 × 3-inch chassis, with the parts arranged as shown in the photographs. About the only constructional precaution necessary is to use a short lead from the microphone socket (a jack may be used instead of the screw-on type, if desired), and to shield thoroughly the input circuit to the grid of the 6J7. This shielding is necessary to reduce hum. In this amplifier, the 6J7 grid resistor, R_1, is enclosed along with the input jack in a National type J-1 jack shield, and a shielded lead is run from the jack shield to the grid of the 6J7. A metal slip-on shield covers the grid cap of the tube.

To realize maximum power output, the "B" supply should be capable of delivering about 145 ma. at 360 volts. A condenser-input supply of ordinary design (Chapter Eight) may be used, since the variation in plate current is relatively small. The current is approximately 120 ma. with no input signal and 145 ma. at full output. If an output of 12 or 13 watts will be sufficient, R_9 and R_{10} may be omitted and all tubes fed directly from a "B" supply giving 270 volts at approximately 175 ma.

The output transformer shown is a universal modulation type suitable for coupling into the

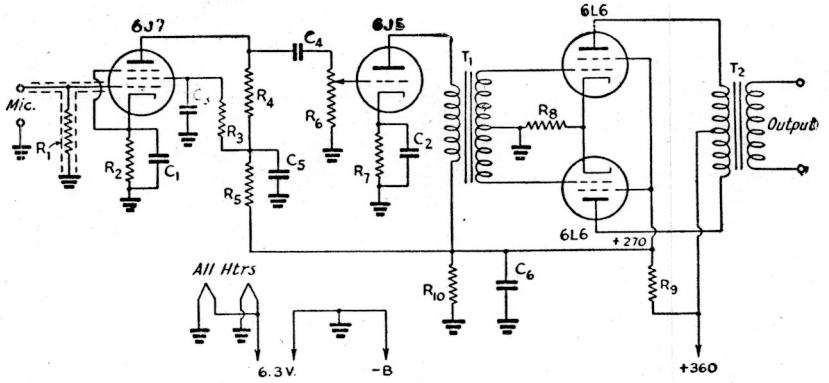

Fig. 1305 — Circuit diagram of the low-cost speech amplifier or modulator capable of power outputs up to 20 watts.

C_1, C_2 — 20-μfd. 50-volt electrolytic.
C_3 — 0.1-μfd. 200-volt paper.
C_4 — 0.01-μfd. 400-volt paper.
C_5, C_6 — 8-μfd. 450-volt electrolytic.
R_1 — 5 megohms, ½-watt.
R_2 — 1300 ohms, ½-watt.
R_3 — 1.5 megohms, ½-watt.
R_4 — 0.25 megohm, ½-watt.
R_5 — 50,000 ohms, ½-watt.
R_6 — 1-megohm volume control.
R_7 — 1500 ohms, 1-watt.
R_8 — 250 ohms, 10-watt.
R_9 — 2000 ohms, 10-watt.
R_{10} — 20,000 ohms, 25-watt.
T_1 — Interstage audio transformer, single plate to p.p. grids, ratio 3:1 (Thordarson T-57A41).
T_2 — Output transformer, type depending on requirements. A multi-tap modulation transformer (Thordarson T-19M14) is shown.

plate circuit of a low-power r.f. amplifier (input 40 watts maximum for 100 per cent modulation) for plate modulation. For cathode modulation, the r.f. input power that can be modulated can be determined from the data in Chapter Five. The amplifier may also be used for grid-bias modulation with the transformer specified.

If the unit is to be used to drive a Class-B modulator, it is recommended that the Class-B tubes be of the zero-bias type rather than a type requiring fixed bias. A suitable output transformer must be substituted for this purpose; data may be found in transformer manufacturers' catalogs.

The frequency response of the amplifier is ample for the range of frequencies encountered in voice communication. It may be extended for high-quality reproduction of music by using higher-priced audio transformers.

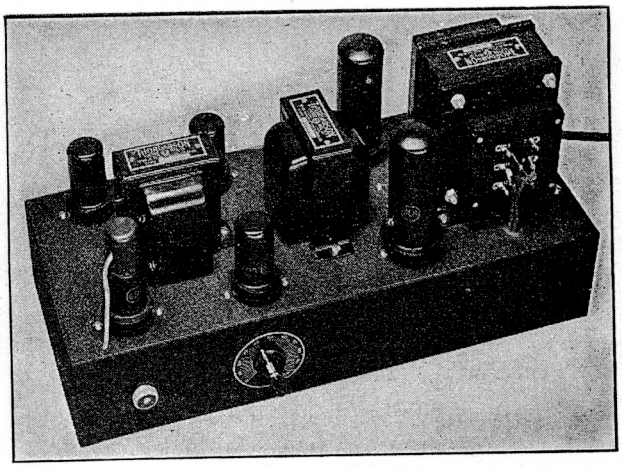

Fig. 1308 — A 40-watt speech amplifier or modulator of inexpensive construction. The 6J7 and first 6J5 are at the front, near the microphone socket and volume control, respectively. T_1 is behind them, and the push-pull 6J5s are at the rear of the chassis behind T_1. T_2, in the center, the push-pull 6L6s, and T_3 follow in order to the right.

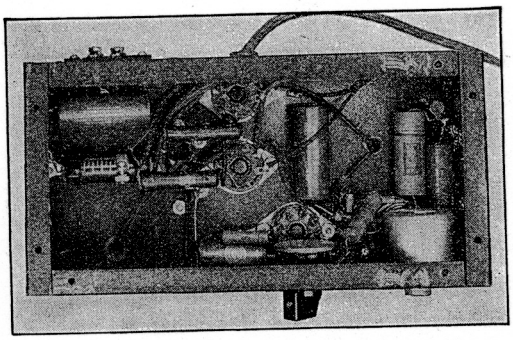

Fig. 1306 — Bottom view of the 20-watt speech amplifier or modulator chassis. The most important constructional point is complete shielding of the microphone input circuit up to the grid of the 6J7 first amplifier.

A 40-Watt Output Speech Amplifier or Modulator

The 40-watt amplifier shown in Figs. 1307–1309 resembles in many respects the 20-watt amplifier just described. The first two stages are, in fact, identical in circuit and construction. To obtain the higher output, however, it is necessary to drive the 6L6s into the grid current region (Class AB_2 operation), so that a driver stage capable of furnishing sufficient power is required. A pair of transformer-coupled 6J5s in push-pull is used for this purpose, inserted between the single 6J5 stage and the push-pull 6L6s. Decoupling is provided (R_9 and C_5) to prevent motorboating because of the higher over-all gain of the amplifier.

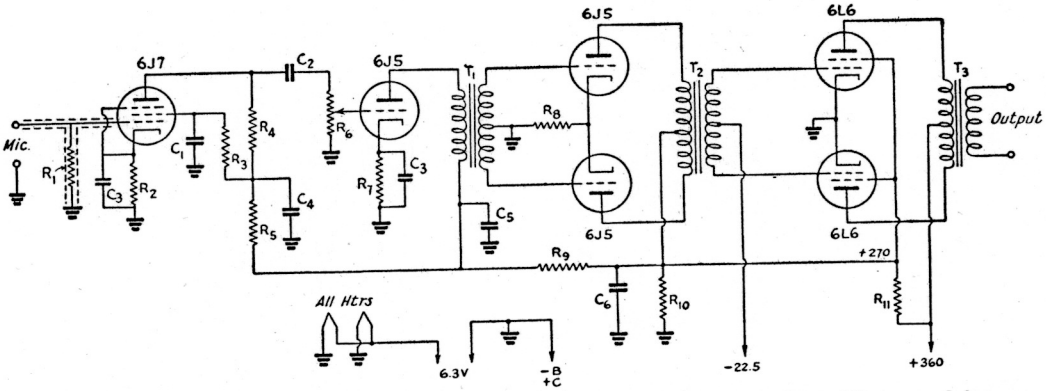

Fig. 1307 — Circuit diagram of the Class AB_2 push-pull 6L6 40-watt output speech amplifier or modulator.

C_1 — 0.1-μfd. 200-volt paper.
C_2 — 0.01-μfd. 400-volt paper.
C_3 — 20-μfd. 50-volt electrolytic.
C_4, C_5, C_6 — 8-μfd. 450-volt electrolytic.
R_1 — 5 megohms, ½-watt.
R_2 — 1300 ohms, ½-watt.
R_3 — 1.5 megohm, ½-watt.
R_4 — 0.25 megohm, ½-watt.
R_5 — 50,000 ohms, ½-watt.
R_6 — 1-megohm volume control.
R_7 — 1500 ohms, 1-watt.
R_8 — 750 ohms, 1-watt.
R_9 — 12,000 ohms, 1-watt.
R_{10} — 20,000 ohms, 25-watt.
R_{11} — 1500 ohms, 10-watt.
T_1 — Interstage audio, single plate to p.p. grids, 3:1 ratio (Thordarson T-57A41).
T_2 — Driver transformer, p.p. 6J5s to 6L6s Class AB2 (Thordarson T-84D59).
T_3 — Output transformer, type depending on requirements. A multi-tap modulation transformer (Thordarson T-19M15) is shown.

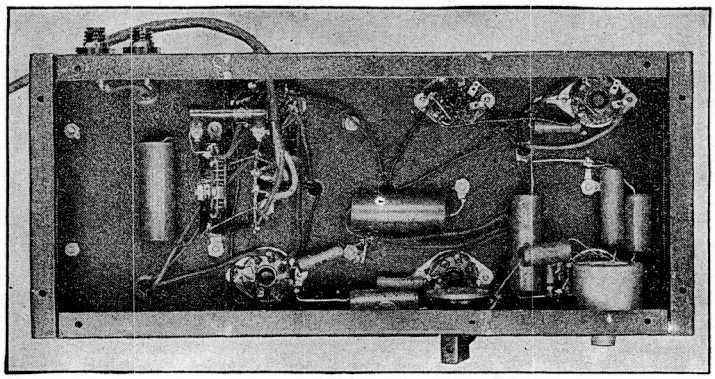

Fig. 1309 — Underneath the chassis of the 40-watt speech amplifier-modulator.

A 6 × 14 × 3-inch chassis is used for the 40-watt amplifier. The photographs show the arrangement of parts. As in the case of the 20-watt unit, complete shielding of the microphone input circuit is essential. The amplifier has ample gain for crystal microphones.

This unit may be used to plate-modulate 80 watts input to an r.f. amplifier. For cathode modulation, the input that can be modulated will depend upon the type of operation chosen, as described in Chapter Five; with 55 per cent plate efficiency in the r.f. stage, for instance, the input may be of the order of 200 watts, making an allowance for the small amount of audio power taken by the grid circuit.

A high-power Class-B modulator can be driven by the unit; data on suitable modulator tubes are given later in this chapter. Zero-bias tubes should be used, because they present a more constant load to the 6L6s than do relatively low amplification-factor tubes which require fixed bias for Class-B operation. A suitable Class-B driver transformer should be substituted for the universal modulation transformer shown.

The power supply should have good voltage regulation, since the total "B" current varies from approximately 140 ma. with no signal to 265 ma. at full output. A heavy-duty choke-input plate supply should be used; general design data will be found in Chapter Eight. The heater requirements are 6.3 volts at 3 amperes. Bias for the 6L6 stage is most conveniently supplied by a 22.5-volt "B" battery bloc; a small-sized unit will be satisfactory, since no current is drawn.

¶ A Push-Pull 2A3 Amplifier with Volume Compression

Ideally, a Class-B modulator should be driven by an amplifier having exceptionally good voltage regulation, to minimize distortion (see Chapter Five). For average amateur work, the 6L6 amplifiers just described will give entirely satisfactory results as drivers for Class-B stages when operated well within their capabilities, especially with zero-bias Class-B tubes. However, somewhat better performance can be secured by using triode drivers, especially when the grid power requirements of the Class-B stage are modest enough to make the use of triodes such as the 2A3 practicable. The amplifier shown in Figs. 1310–1312, inclusive, has an output (from the transformer secondary) of 6 watts with negligible distortion, and thus is suitable for driving Class-B stages of 100 to 250 watts output.

The amplifier also incorporates an automatic volume-compression circuit to maintain a high average percentage of modulation (Chapter Five). The side amplifier and rectifier, combined in the 6SQ7 tube, rectifies a portion of the voice current. The rectified output of this circuit is filtered and applied to the Nos. 1 and 3 grids of a pentagrid amplifier tube, thereby varying its gain in inverse proportion to the signal strength. With proper adjustment, an average increase in modulation level of about 7 db. can be secured without exceeding 100 per cent modulation on peaks.

The amplifier proper consists of a 6J7 first stage followed by a 6L7 amplifier-compressor. The 2A3 grids are driven by a 6N7 self-balancing phase inverter. The operation of the 2A3s is purely Class A, without grid current.

The amount of compression is controlled by means of the potentiometer, R_{20}, in the grid circuit of the 6SQ7. A switch, S_1, is provided to short-circuit the rectified output of the compressor when normal amplification is required.

The construction of the amplifier resembles that of the unit shown in Fig. 1301, the tubes and output transformer being mounted on the rear edge of a 17 × 4 × 3-inch chassis to save panel height in relay-rack mounting. Looking at the amplifier from the front, the 6J7 first amplifier is in the upper left corner, with the 6L7 to its right. The 6SQ7 is below the 6L7.

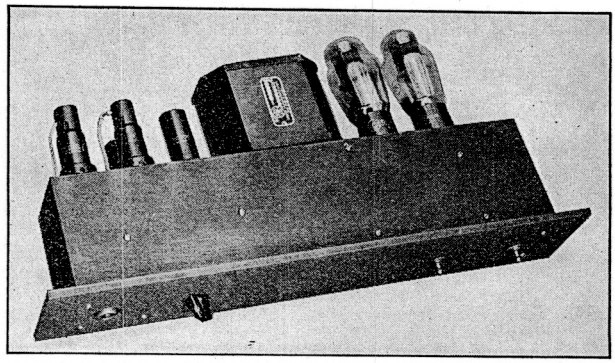

Fig. 1310 — A push-pull 2A3 speech amplifier having an output of approximately 6 watts. A volume-compression circuit is included.

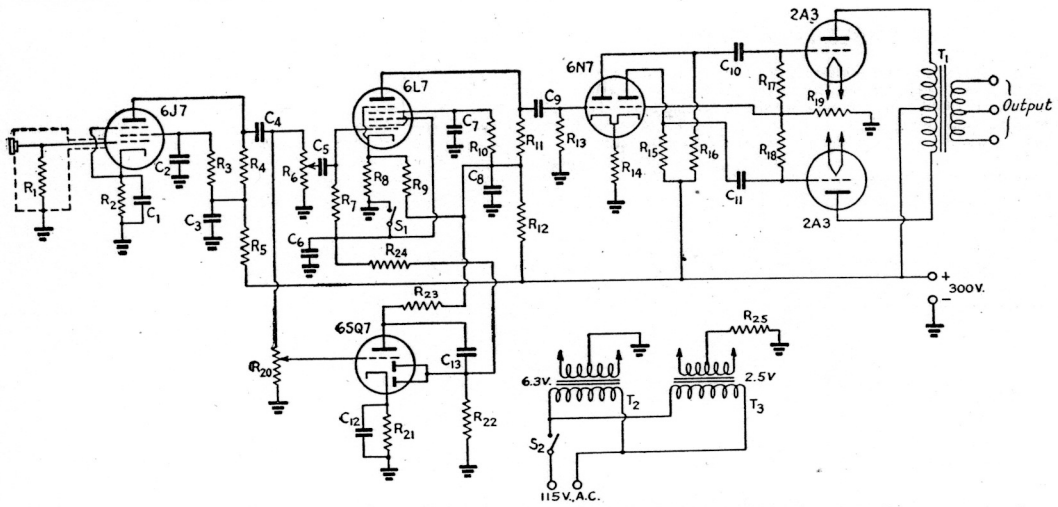

Fig. 1311 — Circuit diagram of the push-pull Class-A 2A3 speech amplifier with automatic volume compression.

C_1, C_{12} — 10-μfd. 50-volt electrolytic.
C_2, C_4, C_5, C_6, C_9, C_{10}, C_{11}, C_{13} — 0.1-μfd. 400-volt paper.
C_3, C_8 — 8-μfd. 450-volt. electrolytic.
C_7 — 0.5-μfd. 400-volt paper.
R_1 — 5 megohms, ½-watt.
R_2, R_8 — 1200 ohms, ½-watt.
R_3, R_7 — 2 megohms, ½-watt.
R_4, R_{13}, R_{22}, R_{24} — 0.5 megohm, ½-watt.
R_5 — 50,000 ohms, ½-watt.
R_6, R_{20} — 0.5-megohm variable.
R_9 — 0.25 megohm, 1-watt.
R_{10}, R_{11}, R_{23} — 0.1 megohm, ½-watt.
R_{12} — 10,000 ohms, ½-watt.
R_{14} — 1500 ohms, ½-watt.
R_{15}, R_{16} — 0.1 megohm, 1-watt.
R_{17}, R_{18}, R_{19} — 0.25 megohm, ½-watt.
R_{21} — 5000 ohms, ½-watt.
R_{25} — 750 ohms, 10-watt.
T_1 — Output transformer to match pp. 2A3s to Class-B grids. (UTC PA-53AX).
T_2 — Filament transformer, 6.3 volts, 2 amperes.
T_3 — Filament transformer, 2.5 volts, 5 amperes.

The 6N7 is followed by the output transformer, the latter being placed in the middle of the chassis in order to distribute the weight evenly. The 2A3s and the power and output terminals are at the right.

In the underneath view the input circuit is at the left, the grid resistor and connector socket being shielded by the National JS-1 jack shield. The lead to the 6J7 grid is shielded, as are also the top caps of this tube and the 6L7. The compressor control, R_{20}, is mounted beside the 6J7, and is screwdriver adjusted; a midget control should be used, since the space is rather limited. The other parts are mounted as close as possible to the points in the circuit to which they connect. The filament transformers should be kept well separated from the wiring in the low-level stages, particularly that of the microphone input and grid circuits.

Adjustment of the compressor control is rather critical. First set R_{20} at zero and adjust the gain control, R_6, for full modulation with the particular microphone used. Then advance the compressor control until the amplifier just "cuts off" (output decreasing to a low value) on peaks; when this point is reached, back off the compressor control until the cut-off effect is gone but an obvious decrease in gain follows each peak. Because of the necessity for filtering out the audio component in the rectifier output, there is a slight delay (amounting to a fraction of a second) before the decrease in gain "catches up" with the peak. When a satisfactory setting is secured, as indicated by good speech quality with a definite reduction in gain on peaks, the gain control, R_6, should be advanced to give full output with normal operation. Too much compression, indicated by the cut-off effect following each peak, is definitely undesirable, and the object of adjustment of the compressor control should be to use as much compression as possible without over-compression.

The amplifier requires a plate-voltage supply of 300 volts at 75 ma. A well-filtered condenser-input power supply using receiving-type components is suitable; a two-section filter is desirable to minimize hum.

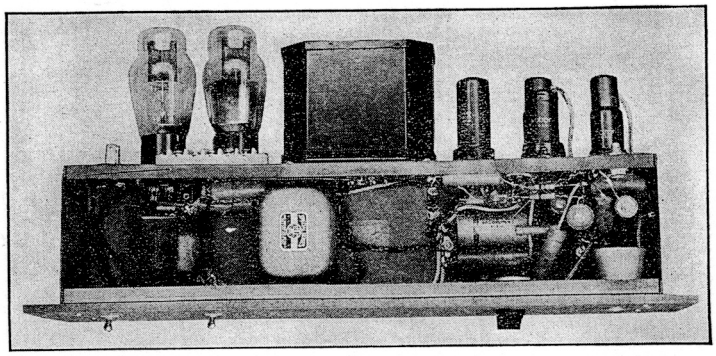

Fig. 1312 — Bottom view of the 2A3 volume-compression speech amplifier.

TABLE I — RESISTANCE-COUPLED VOLTAGE AMPLIFIER DATA

Data are given for a plate-supply of 300 volts; departures of as much as 50 per cent from this supply voltage will not materially change the operating conditions or the voltage gain, but the output voltage will be in proportion to the new voltage. Voltage gain is measured at 400 cycles; condenser values given are based on 100-cycle cut-off. For increased low-frequency response, all condensers may be made larger than specified (cut-off frequency in inverse proportion to condenser values provided all are changed in the same proportion). A variation of 10 per cent in the values given has negligible effect on the performance.

High-frequency cut-off with pentodes is approximately 20,000 cycles with a plate resistor of 0.1 megohm, 10,000 cycles with 0.25 megohm, and 5000 cycles with 0.5 megohm. With triode amplifiers, the high-frequency cut-off is well above the audio range.

	Plate Resistor Megohms	Next-Stage Grid Resistor Megohms	Screen Resistor Megohms	Cathode Resistor Ohms	Screen By-pass μfd.	Cathode By-pass μfd.	Blocking Condenser μfd.	Output Volts (Peak)[2]	Voltage Gain[3]
6A6, 6N7 53	0.1	0.1	—	1150[1]	—	—	0.03	60	20
		0.25	—	1500[1]	—	—	0.015	83	22
		0.5	—	1750[1]	—	—	0.007	86	23
	0.25	0.25	—	2650[1]	—	—	0.015	75	23
		0.5	—	3400[1]	—	—	0.0055	87	24
		1.0	—	4000[1]	—	—	0.003	100	24
	0.5	0.5	—	4850[1]	—	—	0.0055	76	23
		1.0	—	6100[1]	—	—	0.003	94	24
		2.0	—	7150[1]	—	—	0.0015	104	24
6C5 (also 6J7, 6C6, 57, 6W7, 7C7 as triodes)[4]	0.05	0.05	—	2100	—	3.16	0.075	57	11
		0.1	—	2600	—	2.3	0.04	70	11
		0.25	—	3100	—	2.2	0.015	83	12
	0.1	0.1	—	3800	—	1.7	0.035	65	12
		0.25	—	5300	—	1.3	0.015	84	13
		0.5	—	6000	—	1.17	0.008	88	13
	0.25	0.25	—	9600	—	0.9	0.015	73	13
		0.5	—	12,300	—	0.59	0.008	85	14
		1.0	—	14,000	—	0.37	0.003	97	14
6C6, 6J7, 6W7, 7C7, 57 (pentode)	0.1	0.1	0.44	500	0.07	8.5	0.02	55	61
		0.25	0.5	450	0.07	8.3	0.01	81	82
		0.5	0.53	600	0.06	8.0	0.006	96	94
	0.25	0.25	1.18	1100	0.04	5.5	0.008	81	104
		0.5	1.18	1200	0.04	5.4	0.005	104	140
		1.0	1.45	1300	0.05	5.8	0.005	110	185
	0.5	0.5	2.45	1700	0.04	4.2	0.005	75	161
		1.0	2.9	2200	0.04	4.1	0.003	97	350
		2.0	2.95	2300	0.04	4.0	0.0025	100	240
6C8G (one triode unit)	0.1	0.1	—	2120	—	3.93	0.037	55	22
		0.25	—	2840	—	2.01	0.013	73	23
		0.5	—	3250	—	1.79	0.007	80	25
	0.25	0.25	—	4750	—	1.29	0.013	64	25
		0.5	—	6100	—	0.96	0.0065	80	26
		1.0	—	7100	—	0.77	0.004	90	27
	0.5	0.5	—	9000	—	0.67	0.007	67	27
		1.0	—	11,500	—	0.48	0.004	83	27
		2.0	—	14,500	—	0.37	0.002	96	28
6F5, 6SF5, 7B4	0.1	0.1	—	1300	—	5.0	0.025	33	42
		0.25	—	1600	—	3.7	0.01	43	49
		0.5	—	1700	—	3.2	0.006	48	52
	0.25	0.25	—	2600	—	2.5	0.01	41	56
		0.5	—	3200	—	2.1	0.007	54	63
		1.0	—	3500	—	2.0	0.004	63	67
	0.5	0.5	—	4500	—	1.5	0.006	50	65
		1.0	—	5400	—	1.2	0.004	62	70
		2.0	—	6100	—	0.93	0.002	70	70
6F8G (one triode unit), 6J5, 6J5G, 7A4, 7N7	0.05	0.05	—	1020	—	3.56	0.06	41	13
		0.1	—	1270	—	2.96	0.034	51	14
		0.25	—	1500	—	2.15	0.012	60	14
	0.1	0.1	—	1900	—	2.31	0.035	43	14
		0.25	—	2440	—	1.42	0.0125	56	14
		0.5	—	2700	—	1.2	0.0065	64	14
	0.25	0.25	—	4590	—	0.87	0.013	46	14
		0.5	—	5770	—	0.64	0.0075	57	14
		1.0	—	6950	—	0.54	0.004	64	14
6L5G	0.05	0.05	—	1740	—	2.91	0.06	56	11[5]
		0.1	—	2160	—	2.18	0.032	68	12[5]
		0.25	—	2600	—	1.82	0.015	79	12[5]
	0.1	0.1	—	3070	—	1.64	0.032	60	12[5]
		0.25	—	4140	—	1.1	0.014	79	13[5]
		0.5	—	4700	—	0.81	0.0075	89	13[5]
	0.25	0.25	—	6900	—	0.57	0.013	64	13[5]
		0.5	—	9100	—	0.46	0.0075	80	13[5]
		1.0	—	10,750	—	0.4	0.005	88	13[5]

[1] Value for both triode sections, assuming both are working under same conditions. In phase inverter service, the cathode resistor should not be by-passed.

[2] Voltage across next-stage grid resistor at grid-current point.

[3] At 5 volts r.m.s. output.

[4] Screen and suppressor tied to plate.

[5] At 4 volts r.m.s. output.

TABLE I—RESISTANCE-COUPLED VOLTAGE AMPLIFIER DATA—*Continued*

	Plate Resistor Megohms	Next-Stage Grid Resistor Megohms	Screen Resistor Megohms	Cathode Resistor Ohms	Screen By-pass μfd.	Cathode By-pass μfd.	Blocking Condenser μfd.	Output Volts (Peak)[2]	Voltage Gain[3]
6R7, 6R7G, 7E6	0.05	0.05	—	1600	—	2.6	0.055	50	9
		0.1	—	2000	—	2.0	0.03	62	9
		0.25	—	2400	—	1.6	0.015	71	10
	0.1	0.1	—	2900	—	1.4	0.03	52	10
		0.25	—	3800	—	1.1	0.015	68	10
		0.5	—	4400	—	1.0	0.007	71	10
	0.25	0.25	—	6300	—	0.7	0.015	54	10
		0.5	—	8400	—	0.5	0.007	62	11
		1.0	—	10,600	—	0.44	0.004	74	11
6S7	0.1	0.1	0.59	430	0.077	8.5	0.0167	57	57[5]
		0.25	0.67	440	0.071	8.0	0.01	73	78[5]
		0.5	0.71	440	0.071	8.0	0.0066	82	89[5]
	0.25	0.25	1.7	620	0.058	6.0	0.0071	54	98[5]
		0.5	1.95	650	0.057	5.8	0.005	66	122[5]
		1.0	2.1	700	0.055	5.2	0.0036	76	136[5]
	0.5	0.5	3.6	1000	0.04	4.1	0.0037	52	136[5]
		1.0	3.9	1080	0.041	3.9	0.0029	66	162[5]
		2.0	4.1	1120	0.043	3.8	0.0023	73	174[5]
6SC7	0.1	0.1	—	750[1]	—	—	0.033	35	29
		0.25	—	930[1]	—	—	0.014	50	34
		0.5	—	1040[1]	—	—	0.007	54	36
	0.25	0.25	—	1400[1]	—	—	0.012	45	39
		0.5	—	1680[1]	—	—	0.006	55	42
		1.0	—	1840[1]	—	—	0.003	64	45
	0.5	0.5	—	2330[1]	—	—	0.006	50	45
		1.0	—	2980[1]	—	—	0.003	62	48
		2.0	—	3280[1]	—	—	0.002	72	49
6SJ7	0.1	0.1	0.35	500	0.10	11.6	0.019	72	67
		0.25	0.37	530	0.09	10.9	0.016	96	98
		0.5	0.47	590	0.09	9.9	0.007	101	104
	0.25	0.25	0.89	850	0.07	8.5	0.011	79	139
		0.5	1.10	860	0.06	7.4	0.004	88	167
		1.0	1.18	910	0.06	6.9	0.003	98	185
	0.5	0.5	2.0	1300	0.06	6.0	0.004	64	200
		1.0	2.2	1410	0.05	5.8	0.002	79	238
		2.0	2.5	1530	0.04	5.2	0.0015	89	263
6SQ7, 6B6G, 7B6, 2A6, 75	0.1	0.1	—	1900	—	4.0	0.03	31	31
		0.25	—	2200	—	3.5	0.015	41	39
		0.5	—	2300	—	3.0	0.007	45	42
	0.25	0.25	—	3300	—	2.7	0.015	42	48
		0.5	—	3900	—	2.0	0.007	51	53
		1.0	—	4200	—	1.8	0.004	60	56
	0.5	0.5	—	5300	—	1.6	0.007	47	58
		1.0	—	6100	—	1.3	0.004	62	60
		2.0	—	7000	—	1.2	0.002	67	63
6T7G	0.1	0.1	—	1950	—	2.85	0.0245	44	27[5]
		0.25	—	2400	—	2.55	0.0135	58	32[5]
		0.5	—	2640	—	2.25	0.008	64	33[5]
	0.25	0.25	—	3760	—	1.57	0.012	57	37[5]
		0.5	—	4580	—	1.35	0.0075	69	40[5]
		1.0	—	5220	—	1.23	0.005	80	41[5]
	0.5	0.5	—	6570	—	1.02	0.008	62	42[5]
		1.0	—	8200	—	0.82	0.0055	77	43[5]
		2.0	—	9600	—	0.70	0.004	86	44[5]
56, 76	0.05	0.05	—	2400	—	2.8	0.08	65	8.3
		0.1	—	3100	—	2.2	0.045	80	8.9
		0.25	—	3800	—	1.8	0.02	95	9.4
	0.1	0.1	—	4500	—	1.6	0.04	74	9.5
		0.25	—	6400	—	1.2	0.02	95	10.0
		0.5	—	7500	—	0.98	0.009	104	10.0
	0.25	0.25	—	11,100	—	0.69	0.02	82	10.0
		0.5	—	15,200	—	0.5	0.009	96	10.0
		1.0	—	18,300	—	0.4	0.005	108	10.0

[1] Value for both triode sections, assuming both are working under same conditions. In phase inverter service, the cathode resistor should not be by-passed.
[2] Voltage across next-stage grid resistor at grid-current point.
[3] At 5 volts r.m.s. output.
[4] Screen and suppressor tied to plate.
[5] At 4 volts r.m.s. output.

TABLE II—CLASS-B MODULATOR DATA

Class-B Tubes (2)	Fil. Volts	Plate Volts	Grid Volts App.	Peak A.F. Grid-to-Grid Voltage	Zero-Sig.[1] Plate Current Ma.	Max.-Sig.[1] Plate Current Ma.[2]	Load Res. Plate-to-Plate Ohms	Max.-Sig. Driving Power Watts[3]	Max.-Sig.[1] Power Output Watts[3]
RK59[4]	6.3	500	−17	——	——	90	——	0.9	30
HY60[7]	6.3	300	−22.5	63	75	120	5,000	4.0	22
		400	−22.5	57	75	120	6,000	3.0	30
HY65[5]	6.3	450	——	——	——	125	——	0.4	34
801-A/801	7.5	600	−75	320	8	130	10,000	3.0	45
HY31Z[4 5]	6.3	300	0	104	20	100	5,000	1.4	18
HY1231Z[4 5]	12.6	400	0	140	26	150	5,000	2.0	40
		500	0	131	36	150	7,000	1.8	51
815[8]	6.3	400	−15	60	22	150	8,000	0.36	42
		500[6]	−15	60	20	150	6,200	0.36	54
1624[7]	2.5	400	−16.5	77	75	150	6,000	0.4	36
		600	−25	106	42	180	7,500	1.2	72
HY6L6GX[7]	6.3	400	−25	80	100	230	3,800	0.35	60
		500	−25	80	100	230	4,550	0.6	75
TZ20	7.5	750	0	195	——	170	9,000	2.6	80
HY61/807[7]		400	−25	80	100	230	3,800	0.35	60
RK807	6.3	500	−25	80	100	230	4,550	0.6	75
		600	−30	80	60	200	6,600	0.4	80
HY69[5 7]	6.3	300	−25	106	60	150	4,000	0.25	30
HY1269[5 7]	12.6	400	−25	145	60	170	4,000	0.4	40
		600	−35	183	65	120	4,500	0.3	65
		500	−25	120	65	200	5,000	0.7	97
RK12	6.3	750	0	129	50	200	9,600	3.4	100
800	7.5	750	−40	320	26	210	6,400	6.0	90
		1000	−55	300	28	160	12,500	4.4	100
		1250	−70	300	30	130	21,000	3.4	106
HY30Z	6.3	600	0	171	18	180	6,000	Note 9	75
		750	0	167	22	180	8,000	"	95
		850	0	171	28	180	10,000	"	110
807[10]	6.3	400	−25	78	100	240	3,200	0.2	55
1625[10]	12.6	500	−25	78	100	240	4,240	0.2	75
		600	−30	78	60	200	6,400	0.1	80
		750[6]	−32	92	60	240	6,950	0.2	120
HK24	6.3	1000	−29	248	30	150	15,000	4.5	105
		1250	−42	256	24	136	21,200	4.2	120
809	6.3	500	−10	170	40	200	5,200	3.5	60
		750	−25	200	35	200	8,400	4.0	100
		1000[6]	−40	230	30	200	12,000	4.2	145
830-B	10	800	−27	250	20	280	6,000	5.0	135
		1000	−35	270	20	280	7,600	6.0	175
HY40Z	7.5	750	0	171	32	225	6,000	Note 9	110
		850	0	185	40	250	7,000	"	155
		1000	0	1[illegible]	45	250	9,000	"	185
RK31	7.5	1000	0	141	25	230	11,000	3.7	160
		1250	0	141	35	220	18,000	4.4	190
808	7.5	1250	−15	240	40	230	12,700	7.8	190
		1500	−25	220	30	190	18,300	4.8	185
RK37	7.5	1250	−35	282	25	235	18,000	7.2	200
811	6.3	1250	0	140	48	200	15,000	3.8	175
		1500[6]	− 9	160	20	200	18,000	4.2	225
35T	5.0 to 5.1	1000	−22	——	——	——	7,200	——	150
		1250	−30	——	——	——	9,600	——	200
		1500	−40	——	——	——	12,800	——	230
TZ40[8]	7.5	1000	0	220	——	280	7,350	5.5	175
		1250	− 4.5	269	——	280	10,000	6.0	225
		1500	− 9	265	——	250	12,000	6.0	250
RK52	7.5	1250	0	180	40	300	10,000	7.5	250
203-A	10	1000	−35	310	26	320	6,900	10	200
		1250	−45	330	26	320	9,000	11	260
211	10	1000	−77	380	20	320	6,900	7.5	200
		1250	−100	410	20	320	9,000	8.0	260
838	10	1000	0	200	106	320	6,900	7.0	200
		1250	0	200	148	320	9,000	7.5	260
HK158	12.6	750	−25	300	50	330	4,500	17	155
		1250	−50	280	35	225	12,500	10	200
		2000	−90	340	30	180	3,200	10	265
HK54	5.0	1500	−45	300	40	198	16,800	5.0	200
		2000	−70	360	24	180	36,000	6.0	260
		2500	−85	360	20	150	40,000	5.0	275
HY51Z	7.5	850	0	148	48	300	5,000	Note 9	160
		1000	0	170	60	350	6,000	"	260
		1250	0	155	90	300	10,000	"	285
203-Z	10	1000	0	206	50	350	6,200	6.5	230
		1250	− 4.5	215	60	350	8,000	6.75	300
ZB120	10	1000	0	190	70	310	6,900	5.0	200
		1250	0	180	95	300	9,000	4.0	245
		1500	− 9	196	60	296	11,200	5.0	300

TABLE II — CLASS-B MODULATOR DATA — *Continued*

Class-B Tubes (2)	Fil. Volts	Plate Volts	Grid Volts App.	Peak A.F. Grid-to-Grid Voltage	Zero-Sig.[1] Plate Current Ma.	Max.-Sig.[1] Plate Current Ma.[2]	Load Res. Plate-to-Plate Ohms	Max.-Sig. Driving Power Watts[3]	Max.-Sig.[1] Power Output Watts[3]
8005	10	1250 1500[6]	−55 −80	290 310	40 40	320 310	8,000 2,500	4.0 4.0	250 300
HF100	10 to 11	1500 1750	−52 −62	264 324	50 40	270 270	12,000 16,000	2.0 9.0	260 350
805 RK57	10	1250 1500	0 −16	235 280	148 84	400 400	6,700 8,200	6.0 7.0	300 370
828[11]	10	1700 2000	−120 −120	240 240	50 50	248 270	16,200 18,300	0 0	300 385
75T	5.0	1000 1500 2000	— — —	— — —	— — —	— — —	6,800 10,000 12,500	— — —	200 300 400
8003	10	1350	−100	480	40	490	6,000	10.5	460
100TH	5.0 to 5.1	2000 2500 3000	Bias adjusted for maximum rated plate dissipation under no-signal conditions Zero bias up to 1250 v. plate				16,000 22,000 30,000	May be driven by push-pull 6L6s	380 460 500
HD203-A	10	1500 1750	−40 −67	— —	36 36	425 425	8,000 9,000	Note 12	400 500
HK254	5.0	2000 2500 3000	−65 −80 −100	400 420 456	50 50 40	260 248 240	16,000 22,000 30,000	7.0 7.0 7.0	328 418 520
810	10	1500	−30	345	80	500	6,600	12	510
1627	5.0	2000	−50	345	60	420	11,000	10	590

[1] Values are for both tubes.
[2] Sinusoidal signal values; speech values are approximately one-half for tubes biased to approximate cut-off and 80 per cent for zero-bias tubes.
[3] Values do not include transformer losses. Somewhat higher power is required of the driver to supply losses and provide good regulation. Input transformer ratios must be chosen to supply required power at specified grid-to-grid voltage with ample reserve for losses and low distortion levels. Driver stage should have good regulation.
[4] Dual tube. Values are for one tube, both sections.
[5] Instant-heating filament type.
[6] Intermittent amateur and commercial service rating.
[7] Beam tube. Class AB_2. Screen voltage: 300.
[8] Beam tube. Class AB_2. Screen voltage: 125 at 32 ma.
[9] Driver: one or two 45s at 275 volts, self-biased (−55 volts).
[10] Beam Tube. Class AB_2. Screen voltage: 300 at 10 ma. Effective grid circuit resistance should not exceed 500 ohms.
[11] Pentode. Class AB_2. Suppressor voltage: 60 at 9 ma. Screen voltage: 750, 4/43 ma. at 1700 plate volts, 2/60 ma. at 2000.
[12] Can be driven by a pair of 2A3s in push-pull Class AB at 300 volts with fixed bias.

Class-B Modulators

Class-B modulator circuits are practically identical no matter what the power output of the modulator. The diagrams of Fig. 1313 therefore will serve for any modulator of this type that the amateur may elect to build. The triode circuit is given at A and the circuit for tetrodes at B. When small tubes with indirectly heated cathodes are used, the cathode should be connected to ground.

Design considerations for Class-B stages are discussed in Chapter Five, and data on the performance of various tubes suitable for the purpose are given in the accompanying tables. Once the requisite audio power output has been determined and a pair of tubes capable of giving that output selected, an output transformer should be secured which will permit matching the rated modulator load impedance to the modulating impedance of the r.f. amplifier. Similarly, a driver transformer should be selected which will properly couple the driver stage to the Class-B grids.

The plate power supply for the modulator should have good voltage regulation and must be well filtered. It is particularly important, in the case of a tetrode Class-B stage, that the screen-voltage power-supply source have excellent regulation, to prevent distortion. The screen voltage should be set as exactly as possible to the recommended value for the tube.

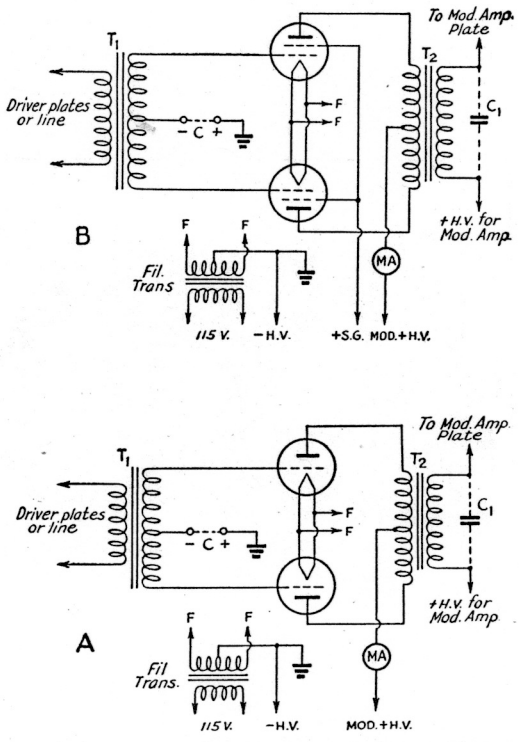

Fig. 1313 — Class-B modulator circuit diagrams. Tubes and circuit considerations are discussed in the text.

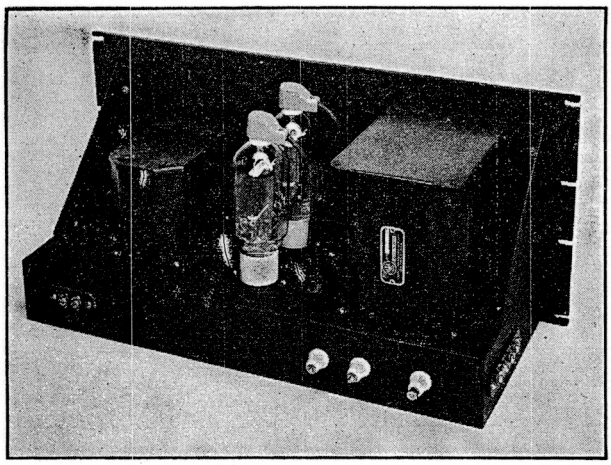

Fig. 1315 — A conventional chassis arrangement for low- and medium-power Class-B modulator stages. The mechanical layout in general follows the typical circuit diagrams given in Fig. 1313.

power capability about 25 per cent greater than the actual power needed for modulation.

The input transformer, T_1, may couple directly between the driver tube and the modulator grids or may be designed to work from a low-impedance (200- or 500-ohm) line. In the latter case, a tube-to-line output transformer must be used at the input to the driver stage. This type of coupling is recommended only when the driver must be at a considerable distance from the modulator, since the second transformer not only introduces additional losses but also further impairs the voltage regulation.

The bias source for the modulator must have very low resistance. Batteries are the most suitable source. In cases where the voltage values are correct, regulator tubes such as the VR75-30, VR105-30, etc., may be connected across a tap on an a.c. bias supply to hold the bias voltage steady under grid-current conditions. Generally, however, zero-bias modulator tubes are preferable, not only because no bias supply is required but also because the loading on the driver stage is less variable and consequently distortion in the driver is reduced.

Condenser C_1 in these diagrams will give a "tone-control" effect and filter out high-frequency side-bands (splatter) caused by distortion in the modulator or preceding speech-amplifier stages. Values in the neighborhood of 0.002 to 0.005 μfd. are suitable. Its voltage rating should be adequate for the peak voltage across the transformer secondary. The plate by-pass condenser in the modulated amplifier will serve the same purpose.

The photographs illustrate different types of construction which may be used for Class-B modulators. The actual placement of parts is not critical.

In estimating the output of the modulator, it should be remembered that the figures given in the tables are for the tube output only, and do not include output-transformer losses. The efficiency of the output transformer will vary with its construction, and may be assumed to be in the vicinity of 80 per cent for the less expensive units and somewhat higher for higher-priced transformers. To be adequate for modulating the transmitter, therefore, the modulator should have a theoretical

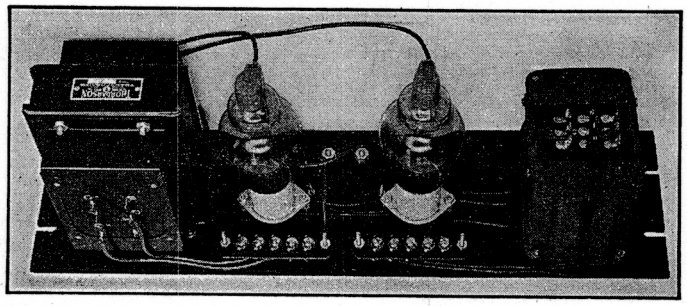

Fig. 1314 — Chassis-less construction for a low-power Class-B modulator. Small tubes and transformers capable of an audio output of the order of 100 watts can be mounted directly on the panel, eliminating the chassis.

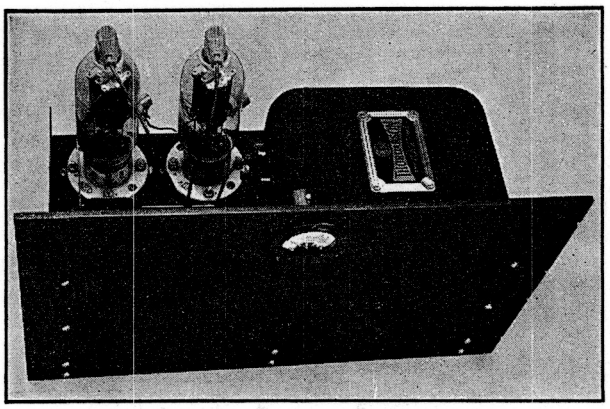

Fig. 1316 — A chassis arrangement for a higher-power Class-B modulator. This unit has the filament transformer for the tubes mounted on the chassis. Where the input transformer is included with the speech amplifier, less chassis space will be needed. The tubes are placed near the rear, where the ventilation is good. The plate millammeter is provided with a small plate over the adjusting screw, to prevent touching the screw accidentally. A Presdwood panel was used for this modulator; with a metal panel, the meter should be mounted behind glass on a well-insulated mount (the meter insulation is not intended for voltages above a few hundred) or connected in the filament center-tap rather than in the high-voltage lead.

CHAPTER FOURTEEN

V.H.F. Receivers

In essential principles, modern receiving equipment for the 28- and 56-Mc. bands does not differ from that used on lower frequencies. In view of the higher frequency there are, of course, certain constructional precautions which must be taken to insure good performance. The 28-Mc. band serves as the meeting ground between those ordinarily termed "communications frequencies" and the very-highs, and it will be found that most of the receivers described in Chapter Eleven are capable of working on 28 Mc. In this chapter are described receivers and converters capable of good performance on 56 Mc. and higher.

Federal regulations require that transmitters working on all frequencies below 60 Mc. must meet similar requirements respecting stability of frequency and, when amplitude modulation is used, freedom from frequency modulation. It is thus possible to use receivers for 56-Mc. a.m. reception having the same selectivity as those designed for the lower frequencies. This order of selectivity is not only possible but desirable, since it makes possible a considerable increase in the number of transmitters which can work in the band without interference, as compared to broad-band receivers. Also, high selectivity greatly improves the signal-to-noise ratio, both in the receiver itself and in the response to external noise. This means that the effective sensitivity of the receiver can be considerably higher than is possible with non-selective receivers. Receivers for f.m. signals usually are designed with less selectivity so that they can accommodate the full swing of the transmitter, but, at least for 28- and 56-Mc. f.m. reception, the h.f. oscillator should be as stable as in a narrow-band a.m. receiver.

The superheterodyne type of receiver is used almost universally on frequencies below 60 Mc., because it is the only type of receiver that fulfills the above requirements for stability. A superheterodyne for a.m. reception and one for f.m. reception differ only in the i.f. amplifier and second detector, so the "converter" or high-frequency portion of the superheterodyne can be used for either a.m. or f.m. reception. Although superheterodynes can be built for 112-Mc. reception, the superregenerative type of receiver is much more widely used. The superregenerative receiver has the advantage of low cost and good sensitivity, although its selectivity does not compare with the superheterodyne type of receiver.

A superheterodyne receiver for 56-Mc. work should use a fairly high intermediate frequency so that image response and oscillator "pulling" will be reduced. At 56 Mc., for example, a difference between signal and image frequencies of 900 kc. (the difference when the i.f. is 450 kc.) is a very small percentage of the signal frequency, consequently the response of the r.f. circuits to the image frequency is very nearly as great as to the desired signal frequency. To get discrimination against the image equivalent to that obtained at 3.5 Mc. with a 450-kc. i.f. would require for 56 Mc. an i.f. 16 times as high, or about 7 Mc. if the circuit *Q*s were the same in both cases. However, the *Q* of a tuned circuit at 56 Mc. is not as high as at the lower frequencies, chiefly because the tube loading is considerably greater. As a result, still higher i.f.s. are desirable, and a practical compromise is reached at about 10 Mc.

Since high selectivity cannot be obtained with a reasonable number of circuits at 10 Mc., the double superheterodyne principle is commonly employed. The 10-Mc. frequency is changed to an i.f. of the order of 450 kc. by a second oscillator-mixer combination. Thus the receiver has two intermediate frequencies, at both of which amplification takes place before the signal is finally rectified and changed to audio frequency.

Very few amateurs build complete 56-Mc. superhet receivers along these lines. General practice is to use a conventional superhet receiver to handle the 10-Mc. output of a simple frequency-converter. Thus a regular communi-

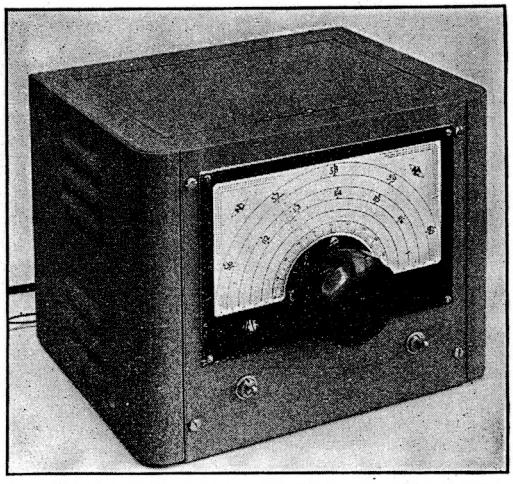

Fig. 1401 — This 2½- and 5-meter converter, complete with self-contained power supply, is mounted in an 8 × 8 × 10-inch cabinet. Plug-in coils give band-spread coverage of the 56- and 112-Mc. amateur bands.

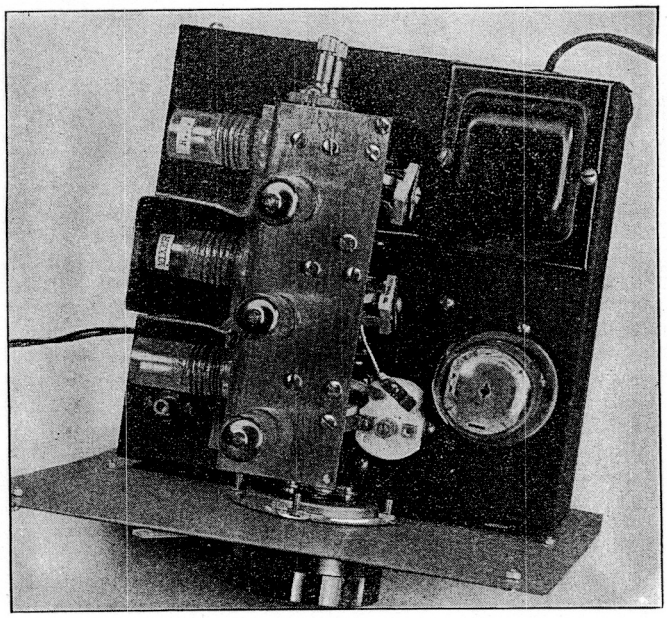

Fig. 1402 — A top view of the converter, showing arrangement of tubes and coils. The shaft projecting through the main chassis at the lower left is the i.f. transformer tuning control. The power transformer is submounted so it does not interfere with adjustment of the r.f. trimmer.

cations-type receiver — or even an all-wave broadcast receiver — can be used with excellent effect on 56 Mc. with the addition of a relatively simple and inexpensive "converter." Since most amateurs have communications receivers, the construction of a good superhet for 56 Mc. is a relatively simple matter.

From a practical aspect, superregenerative receivers may be divided into two general types. In the first the quenching voltage is developed by the detector tube itself — so-called "self-quenched" detectors. In the second, a separate oscillator tube is used to generate the quench voltage. The self-quenched receivers have found wide favor in amateur work. The simpler types are particularly suited for portable equipment where the apparatus must be kept as simple as possible. Many amateurs have "pet" circuits which are claimed to be superior to all others, but the probability is that the arrangement of their particular circuit has led to the use of correct operating conditions. Time spent in minor adjustment of values will result in a smooth-working receiver free from howling and irregular performance and is well worth the effort.

¶ V.H.F. Converters

If the amateur already has a communications receiver, or even a fairly decent all-wave b.c. set capable of tuning to 5 or 10 Mc., there is little or no need for building a special v.h.f. receiver, particularly for 56 Mc. It is much easier to build a converter and work the converter into the already existing receiver. The output transformer of the converter is tuned to the same frequency as the receiver (5 or 10 Mc.) and the signal is coupled through a low-impedance line to the input of the receiver in much the same manner that link coupling is used in a transmitter. All tuning is done with the converter, and the output volume is adjusted to a suitable level by means of the gain control on the receiver into which the converter is working.

¶ A High-Performance Converter for 56 and 112 Mc.

The converter shown in Figs. 1401, 1402, 1403, 1404 and 1405 uses the new 9000-series "button" tubes, which are quite, similar electrically to "acorn" tubes but are somewhat easier to handle. As can be seen from the diagram in Fig. 1403, a 9001 r.f. stage is transformer-coupled to a 9001 mixer. The h.f. oscillator is a 9002 and it is capacity-coupled to the mixer grid through C_{15}. The output circuit (C_{14}, C_{16} and L_7) is tuned to 10.2 Mc., approximately, although the converter could be made to work into some other i.f. with suitable changes in the output circuit and the oscillator coil, L_5L_6, constants.

As indicated in the diagram, the screen and plate by-pass condensers are returned to one cathode lead (the one to which the suppressor is connected) while the other lead is grounded through a condenser to serve as the grid return. In the mixer plate circuit a low-drift mica condenser, C_{14}, is connected directly from plate to cathode, to short-circuit the signal-frequency component in the plate circuit. This condenser is part of the i.f. tuned circuit, and its capacity must be taken into account in calculating the inductance required at L_7.

The mixer and r.f. tuned circuits are made as low-C as is possible under the circumstances; the use of plug-in coils unavoidably introduces some stray capacity that would not be present if the circuits were made to operate on one frequency only. The tuning condensers are cut down to two plates each, and have just about enough capacity range to cover the 56-Mc. band with a little to spare. The trimmers are mica units operated at nearly minimum capacity, so that the mica is a negligible factor in the operation of the condenser; for all practical purposes, the dielectric is purely air. The L/C ratio compares favorably with those commonly attained in acorn receivers.

The oscillator circuit is of the grid-tickler type, with the tuned tank in the plate circuit. The tuned circuit is made higher-C than the signal-frequency circuits to improve the stability, and as a consequence somewhat more tuning capacity is needed to cover the frequency range. The tuning condenser is a 15-$\mu\mu$fd. unit

cut down to three plates and the trimmer is a 25-$\mu\mu$fd. air-dielectric unit. The oscillator and mixer circuits are coupled through a small homemade condenser, C_{15}, tailored to give suitable injection of oscillator voltage into the mixer grid circuit.

The oscillator is tuned to the low side of the signal frequency on both 56 and 112 Mc., to give slightly better oscillator stability. A VR 105-30 voltage-regulator in the power supply adds further to the stability of the oscillator.

The power-supply part of the circuit needs no comment, except to explain that a separate filament transformer was used only because no suitable small plate transformer was available with a 6.3-volt heater winding.

The "chassis" on which the converter is assembled is a piece of sheet copper, somewhat less than 1/16 inch thick, 5½ inches long, and bent as shown in the photographs. The width on top is 1¾ inches, the height 2¼ inches, and the bottom lip, for fastening to the main chassis, is ¾-inch wide. The tubes are mounted on top near the bent edge, allowing just enough room to insert the socket mounting ring, and are 1¾ inches apart, center to center, with the r.f. tube 1⅜ inches in from the rear edge. The coil sockets are mounted on the side, ¾ of an inch down from the top, so that the connections between socket prongs and the tuning condenser terminals can be made without additional wires. The spacing is such that the lead from the stator connection on the condenser to the grid prong on the tube socket is only about ¼-inch long.

In building an assembly of this type, it is a practical necessity to do all the wiring before the tuning condensers are mounted. The inside view gives some idea of the arrangement of by-pass condensers; the chief consideration in placing them is to eliminate leads, insofar as possible. Each stage has its own ground point, which, in the case of the r.f. and mixer stages, is on the side of the chassis directly below the tube socket and the length of the cathode by-pass condenser away from it. The screws which hold the ground lugs in place are threaded into the copper, and on the outside also help support the vertical interstage shields. The oscillator ground is also on the side but close to the cathode pin, which is grounded directly; the plate by-pass condenser, C_{13}, is brought to the same point. In the other two stages the ground leads from the tuned circuits are ⅜-inch wide

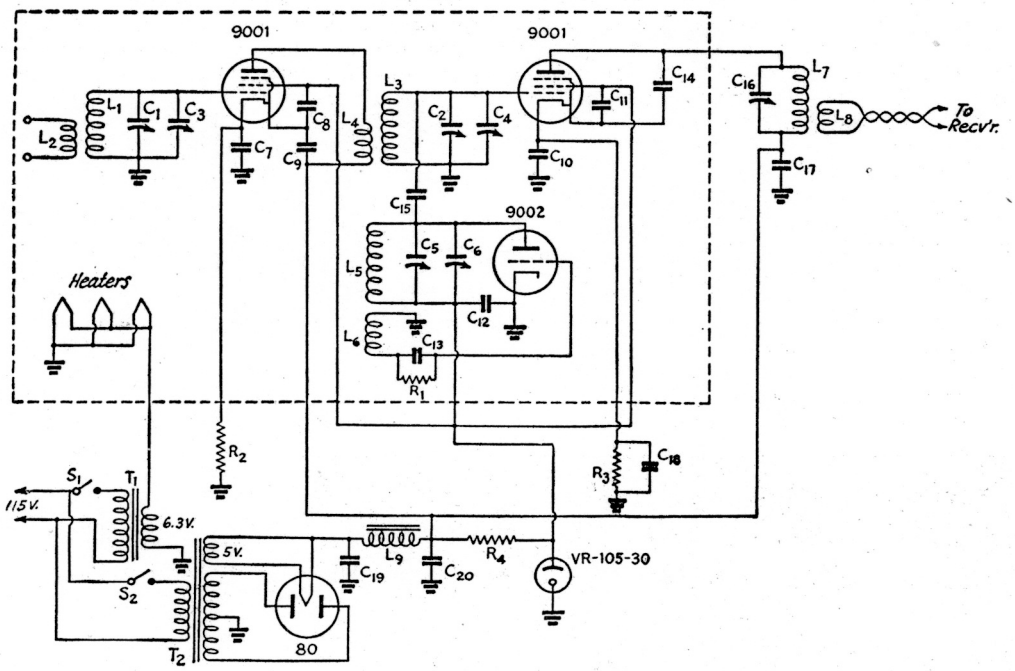

Fig. 1403 — Circuit diagram of the high-performance plug-in coil 56–112-Mc. converter using 9000-series tubes.

C_1, C_2 — Approximately 5-$\mu\mu$fd. variable (National UM-15 cut down to 2 plates).
C_3, C_4 — 3–30-$\mu\mu$fd. mica trimmer (National M-30).
C_5 — Approximately 8-$\mu\mu$fd. variable (National UM-15 cut down to 3 plates).
C_6 — 25-$\mu\mu$fd. air trimmer (Hammarlund APC-25).
C_7–C_{12} — 500-$\mu\mu$fd. midget mica.
C_{13} — 100-$\mu\mu$fd. mica.
C_{14} — 50-$\mu\mu$fd. silver-mica,
C_{15} — Oscillator-mixer coupling condenser (see text).
C_{16} — 25-$\mu\mu$fd. air trimmer (Hammarlund APC-25).
C_{17} — 0.002-μfd. mica.
C_{18} — 0.01-μfd. 400-volt paper.
C_{19}, C_{20} — 8-μfd. 450-volt electrolytic.
R_1 — 50,000 ohms, ½-watt.
R_2 — 1200 ohms, ½-watt.
R_3 — 10,000 ohms, ½-watt.
R_4 — 6000 ohms, 10-watt.
L_1–L_6 — See coil table, p. 291.
L_7 — 18 turns No. 22 e., close-wound on ⅝-inch diameter form.
L_8 — 8 turns similar to L_7, at ground end of L_7.
L_9 — Filter choke, 8 henrys, 55 ma. (Thordarson T-14C62).
T_1 — Filament transformer, 6.3 volts, 1.2 amperes (Stancor P-6134).
T_2 — Power transformer, 560-0-560 volts, 30 ma. (Thordarson T-60R49).
S_1, S_2 — S.p.s.t. toggle switch,

strips of thin copper, this being used in preference to wire to reduce the inductance.

For electrostatic shielding between the r.f. and mixer stages, two baffle plates are used. One small plate, not visible in the photograph, is fastened to the side of the chassis directly opposite the tube socket and is soldered to the shield cylinder in the center of the socket. It effectively shields the grid wiring from the plate circuit, and is about an inch square. Since it crosses the tube socket and should be placed as close to it as possible, care must be taken to see that the socket prongs are bent away so they cannot touch it. The other shield is almost all on the outside and is used chiefly to prevent electrostatic coupling between the r.f. and mixer trimmer condensers, which are mounted on the sides of the tuning condensers. A transverse shield plate completely boxing off the two stages would be better, but it is an awkward job mechanically in view of the necessity for assembling the condenser gang.

No shielding is required between the mixer and oscillator; in fact, the stray coupling is too small to give good frequency conversion. The trimmer condenser is supported from the top of the chassis by a small bracket made from brass strip, bent to such a size that the rotor connection of the trimmer comes right at the rotor spring on the tuning condenser, where the two are soldered together. A small strip of copper is soldered between the two sets of stator plates, using the soldered mounting on top of the trimmer for its connection. The coupling condenser is a small piece of copper bolted to the trimmer end plate and bent to face the other soldered mounting. The separation is about a sixteenth of an inch.

The vertical shield plates between the coils are $2\frac{3}{8} \times 1\frac{3}{8}$ inches, with bent-over edges to fasten to the side of the chassis. To complete the magnetic shielding the end of the mixer coil must be boxed in, which is done by a piece of copper in the shape of a shallow U, held in place simply by making it fit tightly between the vertical shields. This piece must be removable for changing the mixer coil.

Care must be used in making soldered connections on the polystyrene sockets and forms, since the material will soften with the application of heat. Have the connections well cleaned before attempting to solder the wires, and hold the iron on the lugs just long enough to get a good joint.

The bottom view shows the arrangement of the power supply and the i.f. output circuit. The transformer for the latter is wound on a National PRE-3 polystyrene form. It is mounted on a bracket to keep it about equally spaced from the top of the chassis and the bottom of the cabinet in which the chassis fits. The various a.c. and d.c. supply connections from the converter are brought to lug strips, as shown; cathode resistors for the r.f. and mixer stages are mounted where they are readily accessible for trying different values. The power-supply parts are arranged to fit in the remaining space. The rubber feet at the rear of the chassis give a little space for circulation of air, since a fair amount of heat is developed by the transformers and regulator tube.

A few mechanical points should be given consideration in assembling the tuning condensers. The screw-on shafts are likely to come loose with use unless they can be anchored in some way, and soldering is about the simplest scheme. The heat tends to cause the lubricant to run out of the shaft bearing, however. Another important point is to get the shafts of the three condensers lined up accurately so that the rotors turn freely. Any twist, particularly at the oscillator condenser shaft, will tend to bend the rotor out of line slightly with respect to the stator, and, since the twisting depends upon the direction of rotation, this means that the assembly will have bad backlash. For the same reason, the dial must be lined up accurately with the condenser shafts. Line up the shafts to run as true as possible and fix the stators where they want to come on the chassis, using shims if necessary.

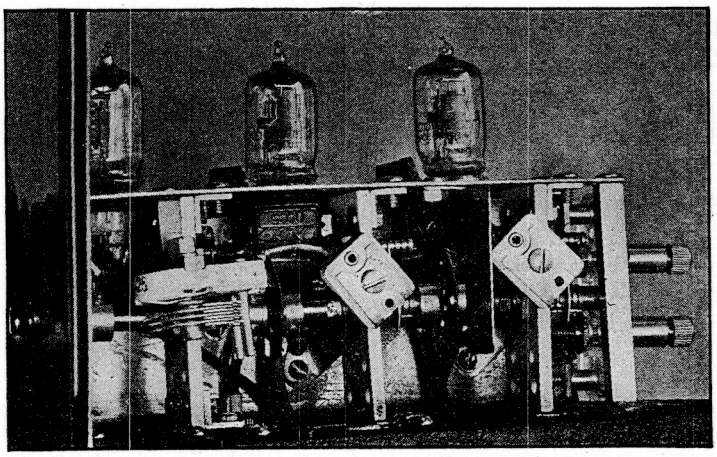

Fig. 1404 — Inside the converter unit, showing arrangement of the tuning condensers. The layout is quite compact, with leads kept as short as possible.

Alignment of the converter will involve some cut-and-try, using the coil specifications given in the table as a guide. It is best to line up the set with the 56-Mc. coils first before tackling the 112-Mc. band. The first step is to make the oscillator cover the proper range, the object being to spread the band over about 75 per cent of the dial scale. With the 10.2-Mc. i.f., the oscillator range, to cover 56 to 60 Mc., will be from 45.8 to 49.8 Mc.; this may be checked on another receiver, if available. If not, probably it will be necessary to use actual

signals in the band for the purpose, which also will involve having at least the mixer hooked up. With the circuit specifications given, the oscillator padding condenser should be set at about half-scale. The inductance of L_5 may be adjusted by closing up or opening out the turn spacing, which can be done within limits without moving the ends of the coil. Once the right range is secured, the turns should be cemented in place. An alternative method of adjustment is to make the coil slightly large at first and then cut down the inductance with a shorted turn of wire which may be slid along the coil form. A limited range of inductance variation can be secured by this method.

The oscillator tickler, L_6, should be adjusted to give stable oscillation without squegging. Squegging is evidenced by a whole series of signals instead of one and can be cured by reducing the feed-back, either by using a smaller number of tickler turns or by moving the tickler farther away from the plate coil. Incidentally, the oscillator should have a good steady d.c. note if means are available for listening to it on another receiver. For this check to mean anything, the receiver used must introduce no modulation on incoming signals.

Once the oscillator range is set, the mixer should be lined up to match. To do this, place the r.f. tube in its socket but connect a resistor of a few hundred ohms from its grid to ground, instead of using L_1. The mixer primary, L_4, must be in place, since it will have some effect on the tuning range of L_3C_2. Connect the r.f. output leads to the doublet posts on the communications receiver, set the latter to 10.2 Mc. and adjust C_{16} for maximum hiss, with the oscillator tube out of its socket. Then replace the tube and, with the oscillator set for 56 Mc., adjust the trimmer, C_4, for maximum hiss; reset the oscillator to 60 Mc. and readjust C_4. If more capacity is needed at C_4 for maximum hiss, the inductance of L_3 is too large; if less, L_3 is too small. Make an appropriate small change in the inductance and try again, continuing the process until C_4 peaks at the same setting at both ends of the band. Adjustment of the inductance of L_3 may be accomplished by the means described above.

COIL DATA

Band	Coil	No. of Turns	Wire Size	Length Inches	Remarks
112 Mc.	L_1	$1\frac{1}{16}$	18	$\frac{15}{16}$	
	L_2	$1\frac{1}{8}$	24		$\frac{1}{8}$" from L_1
	L_3	$1\frac{1}{16}$	18	$\frac{15}{16}$	
	L_4	$1\frac{7}{8}$	24	$\frac{1}{8}$	$\frac{1}{8}$" from L_3
	L_5	$\frac{3}{4}$	18		
	L_6	$1\frac{1}{8}$	24		$\frac{1}{8}$" from L_5
56 Mc.	L_1	$4\frac{5}{8}$	18	$\frac{3}{8}$	
	L_2	$2\frac{7}{8}$	24	$\frac{1}{8}$	$\frac{1}{8}$" from L_1
	L_3	$4\frac{1}{2}$	18	$\frac{7}{16}$	
	L_4	$2\frac{7}{8}$	24	$\frac{1}{8}$	$\frac{1}{8}$" from L_3
	L_5	$3\frac{5}{8}$	18	$\frac{3}{8}$	
	L_6	$2\frac{7}{8}$	24	$\frac{5}{32}$	$\frac{1}{8}$" from L_5

All coils wound on ¾-inch diameter forms (Amphenol type 24-5H, 5-prong).

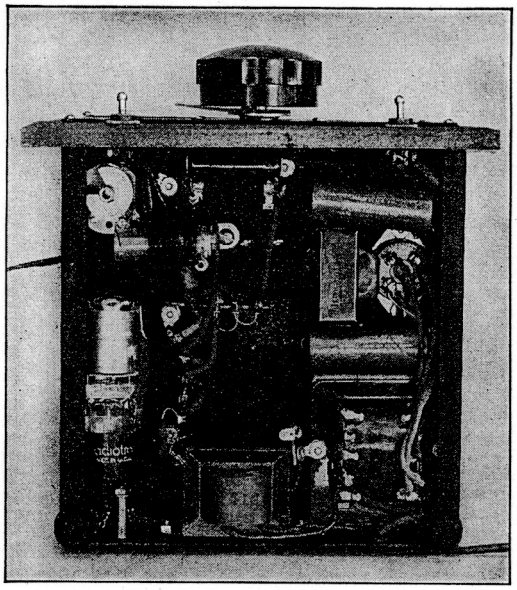

Fig. 1405 — The converter power supply occupies the right-hand section of the chassis in this bottom view. The i.f. output section is in the upper left-hand corner.

When this process is finished, C_4 should be well in the air-dielectric portion of its range. Should the movable plate be close to the mica, L_3 is considerably too small. However, this would be accompanied by reduced tuning range on C_2, and it is doubtful if high padding capacity would permit full band coverage.

The r.f. stage is aligned in just the same way as the mixer circuit. The initial alignment should be done with nothing connected to the antenna posts. Should oscillation occur, reduce the size of L_4 until the stage is stable. Some slight trace of regeneration may remain, as indicated by an exaggerated peaking in the r.f. stage, but this will disappear with any sort of antenna load on the r.f. tuned circuit.

The procedure for the 112-Mc. coils is similar to that for 56 Mc. It is desirable to adjust the oscillator coil so that the trimmer, C_6, does not need resetting when changing bands. (*Bib.* 1.)

¶ A Simple 56/112-Mc. Converter

The converter shown in Figs. 1406, 1407, 1408, 1409, 1410 and 1411 uses a 1232 loktal tube for the mixer and a 7A4 for the h.f. oscillator. Although its sensitivity is not quite as good as that of the converter just described, it affords a simple converter for the v.h.f. range that will prove perfectly satisfactory. By grouping the tuning condenser, coil and tube socket closely together, it is a relatively simple matter to achieve low-enough circuit capacities to work readily on 112 Mc. As can be seen from Fig. 1408, the grid of the 1231 mixer is tapped down on the coil to reduce the loading on the circuit and obtain a better gain in the stage. The plate-tickler circuit in the oscillator permits the cathode to be grounded directly, causing a minimum of hum on the signal.

The oscillator tuning condenser is a 15-$\mu\mu$fd. condenser from which several plates have been removed, and this is paralleled by a 35-$\mu\mu$fd. band-set condenser. With this type of bandspread system the converter can be set to the desired frequency band and the mixer condenser turned to the point where the noise is greatest; thereafter the tuning is all done with the small oscillator condenser. When a signal has been tuned in the mixer can be peaked again, but this is not usually necessary over the range of the bandspread condenser. Pulling of the oscillator circuit by the mixer tuning is slight, because of the loose coupling.

The chassis is made of 1/16-inch thick aluminium; other metals could be substituted, if necessary. The panel is $5\frac{1}{2} \times 8$ inches, but could be trimmed to 6 inches long. The extra length was included to put the dial in the center of the panel and also to provide room for possible future switches for shifting to various i.f. amplifiers. The chassis itself is built from a piece of $5\frac{1}{4}$-inch wide metal, bent to form a top $3\frac{7}{8}$ inches wide and a back 4 inches deep. A $\frac{1}{2}$-inch lip is bent down from the top to fasten the chassis to the panel. The two sides are made by forming shallow Us (with $\frac{1}{2}$-inch sides) to fit between the panel and the back of the chassis. A shield is fitted under the chassis, making the oscillator compartment $2\frac{1}{2}$ inches wide. This shield mounts the oscillator tuning condenser and the National TPB Victron through-bushing which serves as a coupling condenser between oscillator and mixer.

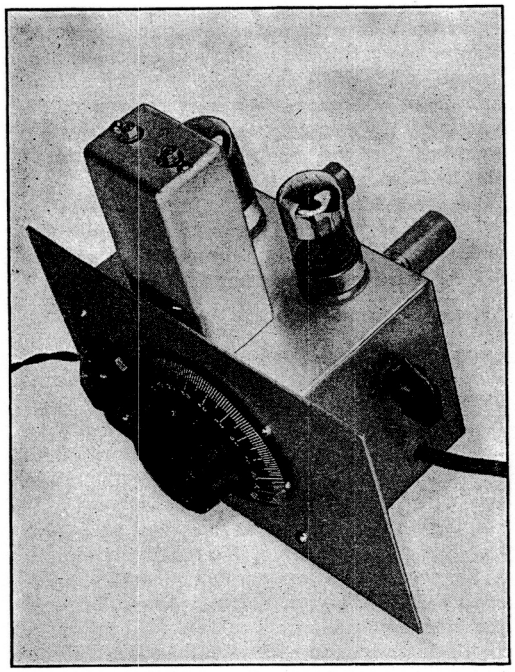

Fig. 1406 — The simple converter uses a 7A4 oscillator and a 1232 mixer. The panel dial is the oscillator tuning dial; the panel knob is the mixer tuning control. Knob on side adjusts the oscillator band-set condenser.

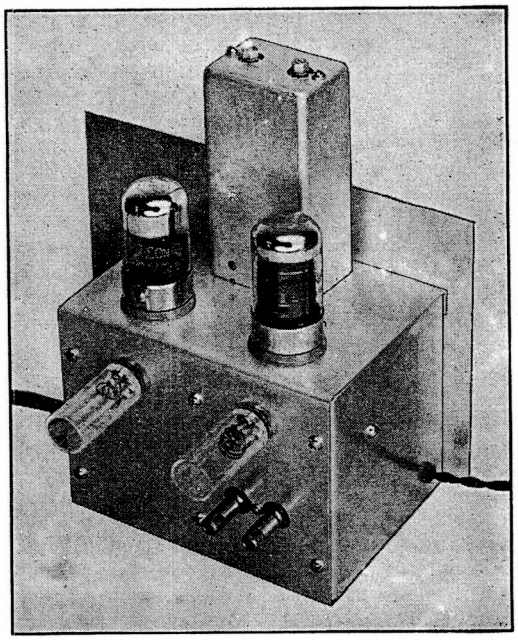

Fig. 1407 — A rear view of the converter, showing the plug-in coils and the antenna terminals. The cable leading off at the left goes to the power supply; the twisted pair on the right carries the output to the i.f. amplifier.

The coil forms are the small $\frac{3}{4}$-inch diameter Amphenol type made of polystyrene. The coil sockets, also of polystyrene, mount simply by drilling a hole and sliding the retainer rings over the sockets. The tube sockets are mounted in the same fashion. For short leads, the oscillator socket should be mounted with the slot towards the rear and the mixer socket with the slot towards the left-hand side.

As mentioned before, the oscillator tuning condenser, C_3, is mounted on the shield partition, and the band-set condenser, C_2, is mounted on the right-hand side of the chassis. The band-set condenser is insulated from the metal by fiber washers, so that there is only one ground point to the chassis for the oscillator circuit — that through the oscillator tuning condenser. The mixer tuning condenser, C_1, is mounted on the right-hand side of the chassis and grounds the mixer circuit at that point.

The oscillator tuning condenser and the mixer tuning condenser are fastened to their respective panel controls through insulated couplings, to avoid duplication of grounds.

The panel and sides should be left off until all of the wiring that can be done without them has been finished. Heater leads, ground connections, by-pass condensers, and resistors all should be put in before the sides and panel are attached. Do not hold the soldering iron on the polystyrene socket lugs for longer than is necessary to start the solder flowing or the socket contacts will loosen from softening of the polystyrene. A small, pointed soldering iron is best. A lead is run from the grid of the 1232 to the through-bushing on the partition but no

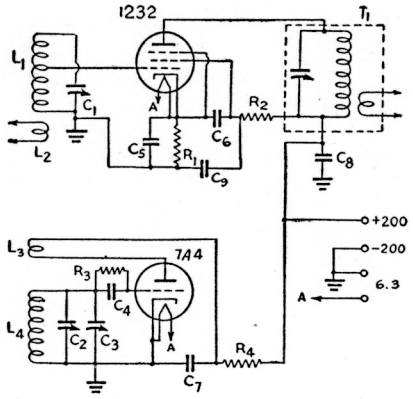

Fig. 1408 — Circuit diagram of the v.h.f. converter;
C_1 — 15-$\mu\mu$fd. midget variable (Hammarlund HF-15).
C_2 — 35-$\mu\mu$fd. midget variable (Hammarlund HF-35).
C_3 — 10-$\mu\mu$fd. midget variable (Hammarlund HF-15 with one stator and one rotor plate removed).
C_4 — 100-$\mu\mu$fd. midget mica.
C_5, C_6, C_7 — 500-$\mu\mu$fd. midget mica.
C_8, C_9 — 0.01-μfd. 600-volt paper.
R_1 — 500 ohms, ½-watt.
R_2 — 125,000 ohms, 1-watt.
R_3 — 20,000 ohms, ½-watt.
R_4 — 10,000 ohms, 1-watt.
T_1 — 3 Mc.: 75 turns No. 30 d.s.c., close-wound; coupling coil 20 turns No. 30 d.s.c., close-wound.
5 Mc.: 45 turns No. 30 d.s.c., close-wound; coupling coil 14 turns No. 30 d.s.c., close-wound.
L_1 — 112 Mc.: 2¼ turns No. 20 e., ⅜-inch diameter, spaced wire diameter Grid tap ¾-turn from top.
56 Mc.: 4½ turns No. 20 e., ¾-inch diameter, spaced over ½ inch. Grid tap 1½ turns from top.
L_2 — 112 Mc.: 3 turns No. 20 e., ¼-inch diameter, close-wound one wire diameter below cold end of L_1.
56 Mc.: 3 turns No. 24 e. close-wound ⅛ inch below L_1.
L_3 — 112 Mc.: 1 turn No. 20 e. ¼-inch diameter, 3 wire-diameters below L_4.
56 Mc.: 1½ turns No. 24 e. close-wound ⅛ inch below L_4.
L_4 — 112 Mc.: ⅞ turn No. 20 e., ⅜-inch diameter.
56 Mc.: 1¾ turns No. 20 e. spaced over ¼ inch.

connection is made on the oscillator side, since the capacity between the bushing and the oscillator leads is sufficient for coupling. All r.f. leads and the leads for the by-pass condensers must be kept short and direct.

The coil for the 56–60-Mc. range is wound in the usual manner on the outside of the coil forms. No trouble should be had in finding the 56-Mc. amateur band, since the tolerance on the range of this coil is fairly wide. The only care necessary is to prevent the pins from loosening up in the forms because of the heat when soldering. The wire should be well cleaned and a spot of flux used on the tip of the pin. No attempt should be made to flow solder on the pin and wire; a drop of solder picked up by the iron can be held against the pin for just an instant, long enough to solder wire and pin together. If the pin loosens up or moves out of place, it can be heated again slightly (by holding the soldering iron against it) and held in the proper position with long-nosed pliers. When the metal (and coil form) cools, it should be as solid as ever. If it isn't it doesn't matter too much, since the form still can be plugged in the socket without difficulty.

The coils for the 112–116-Mc. range are wound *inside* the coil forms. It is a simple matter to adjust them, however, since the forms can first be sawed through near the base and the coils adjusted by spreading the turns. When the necessary adjustments have been made the coil form can be fastened together by Duco cement, thus avoiding danger of its being injured by handling.

The usual rule must be followed with the oscillator coil; i.e., if both grid and plate coils are wound in the same direction, the grid and plate connections should come off at opposite ends (in this case, the outside ends).

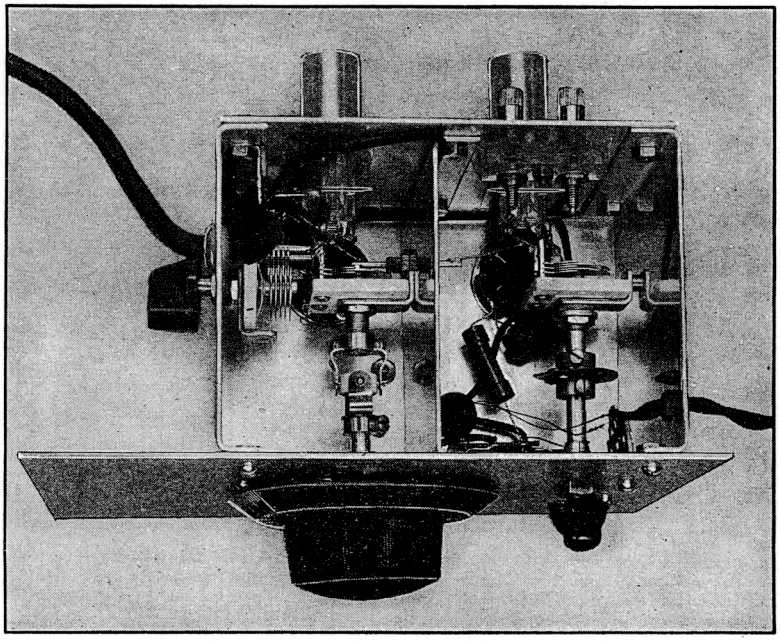

Fig. 1409 — A view underneath the v.h.f. converter. Note that in the oscillator section (on the left) the band-set and tuning condensers butt into each other for short leads. The band-set condenser, C_2, is insulated from the side panel by washers, and the oscillator circuit is grounded to the chassis at only one point — through the tuning condenser. The Victron through-bushing which serves as the coupling condenser between mixer and oscillator can be seen on the partition just above the oscillator tuning condenser. The bushing connects to the 1232 grid on one side and is blank on the other. The i.f. transformer, T_1 (not visible in this view), is built in a Hammarlund ETU shielded unit. Both sections of the trimmer assembly condenser are used, in parallel.

The connections for the oscillator coil, looking at the form from the bottom, are (starting with the widely spaced pin and going clockwise): plate, ground, "B" +, grid, blank. In the same manner, the mixer-coil connections are: grid, tuning condenser, antenna, antenna, ground. Both mixer and oscillator coil sockets are mounted with the odd pin at the top.

If connections have been kept short, no trouble should be experienced in making the oscillator oscillate on any of the ranges. For the 112-Mc. band, the oscillator band-set condenser setting will be at minimum capacity. For 56 Mc. it should be set at about mid-scale, varying slightly with the i.f. used.

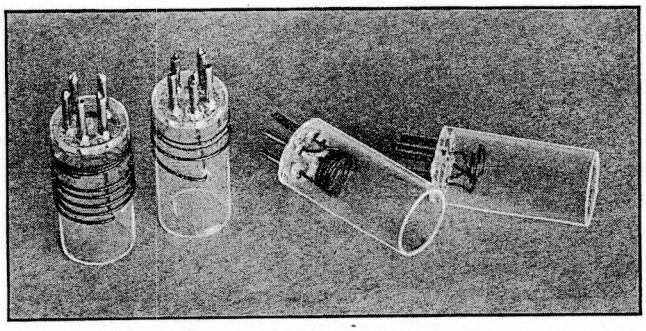

Fig. 1411 — The 112-Mc. coils (right) are wound self-supporting inside the coil forms, while the 56-Mc. coils are wound in the usual manner.

The converter is coupled into the i.f. amplifier through a low-impedance link. This requires that the input transformer in the i.f. amplifier be modified by winding a number of turns about the grid coil as a link coil. Alternatively, a duplicate of the output transformer, T_1, can be substituted for the first transformer in the i.f. amplifier. If a receiver is used for the i.f. amplifier, the output leads connect to ground and to the grid cap of the mixer tube in the receiver, replacing the regular grid lead.

Antennas for use with the converter present the same problem that they do with any v.h.f. receiver; the best one for the service required is the one to use. A little experimenting with the antenna coil, L_2, may help in giving a better match to the antenna system; the dimensions given are average values that work out about right for low-impedance line input.

If signals are weak, the trouble probably can be accounted for by too much or too little oscillator voltage reaching the mixer. This can be adjusted over a considerable range by moving the tickler coil, L_3, closer to or farther away from L_4. However, the adjustment does not seem to be too critical.

For maximum performance and stability, it is suggested that a voltage-stabilized power supply be used. (*Bib.* 2.)

A 56-Mc. Converter with 1852 R.F. Amplifier

The performance of a converter can be improved by equipping it with an r.f. amplifier stage preceding the mixer. The additional amplification provided is seldom necessary with a communications receiver functioning as an i.f. amplifier, but the improvement in both image rejection and signal-to-noise ratio is worth while. A converter with an r.f. amplifier stage is shown in Fig. 1412. As the circuit, Fig. 1413, shows, an 1852 is used as the r.f. amplifier or preselector, and a triode-hexode converter tube, the 6KS, is used as a combined mixer and oscillator. The intermediate frequency is 10 megacycles.

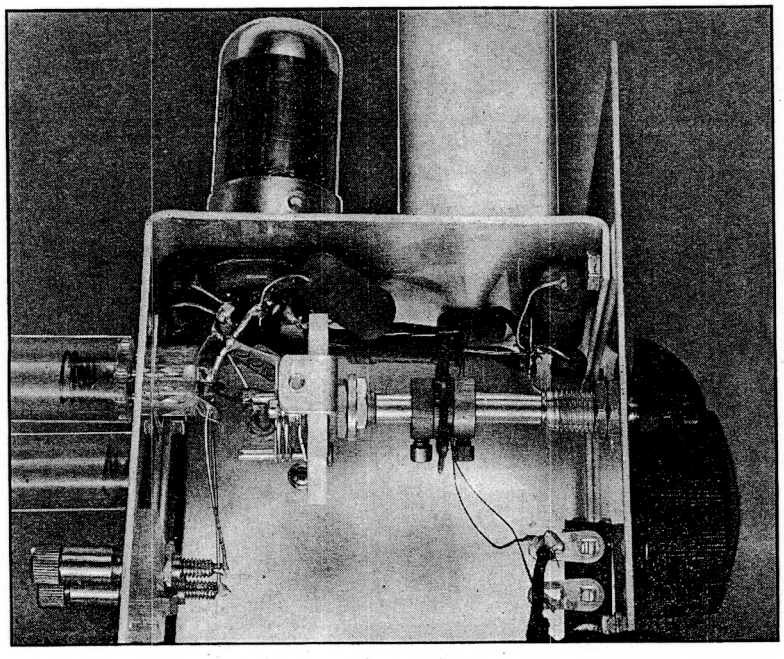

Fig. 1410 — The mixer circuit can be seen in this view of the 56/112-Mc. converter with the side panel removed. The tie strip at the lower right takes the output leads from the i.f. transformer. The interstage through-bushing can be seen just to the left of and under the tuning condenser, with a wire from it running to the 1232 grid terminal.

The metal chassis measures 1 × 3½ × 7 inches. Shielding between stages is provided by the right-angle partition shown in the photograph. This partition is 2¾

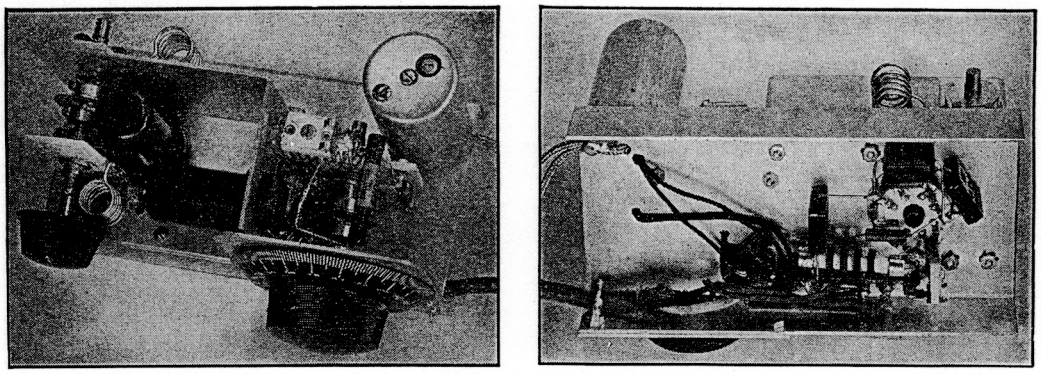

Fig. 1412 — Left — A superheterodyne converter for 56-Mc. reception. Designed for use with a communications-type receiver, this converter has an 1852 r.f. stage and a 6K8 mixer-oscillator. A high i.f. (10 Mc.) gives good image reduction. *Right* — Below-chassis wiring of the metal-tube converter. The 1852 socket may be seen at the right.

inches high, and the side parallel to the front edge of the chassis is 4 inches long. The portion supporting the 6K8 is 2½ inches long. The 6K8 is mounted at the bottom of the shield, its grid cap facing the left end of the base.

The 1852 grid tuning condenser, C_1, and coil, L_1, are mounted to the rear of the 4-inch section of the shield. The 1852, condenser C_2 and coil L_2 are mounted in front of the partition, with C_2 directly in line with C_1. A hole through the shield permits the two shafts to be connected by a flexible coupling. Both of these coils, and also L_3, have their terminals soldered directly to the condenser lugs.

The oscillator-mixer section of the circuit is to the right of the 2½-inch partition, with the tube socket mounted on the same side. C_3, also mounted on the partition, is located at the rear of the tube socket. The i.f. transformer, T_1, is mounted at the right rear corner of the chassis. The output leads from this transformer are shielded, to prevent stray pick-up between the converter and the receiver. By-pass condensers and resistors are closely grouped around the tube socket, assuring short leads. A trimmer condenser, C_4, soldered across L_3, allows a small variable capacity to be used as the tuning element and at the same time adds enough capacity to make the circuit fairly high-C for good stability.

A small panel is used to mount a vernier dial for the oscillator condenser. Since the r.f. tuning is broad enough to cover a good portion of the band with one setting, a small knob gives sufficient control.

The output line may be connected to the antenna and ground terminals of the standard receiver used as an i.f. amplifier, or to the "doublet" terminals, if provided. The exact i.f. chosen is not particularly important, so long as it is in the vicinity of 10 Mc. Choose a frequency which is free from audible signals, if possible, so that there will be no unnecessary interference from this source.

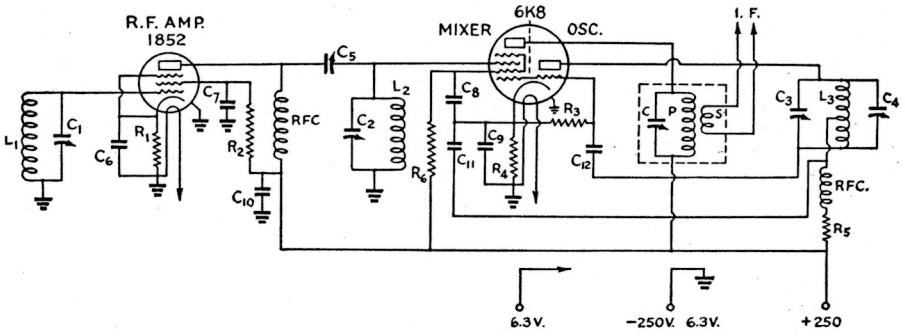

Fig. 1413 — Circuit diagram of the 1852–6K8 56-Mc. metal-tube superheterodyne converter.

C_1, C_2 — 15-$\mu\mu$fd. midget variable (National UM-15).
C_3 — Same as C_1 but with two rotor plates and one stator plate removed.
C_4, C_5 — 3–30-$\mu\mu$fd. compression-type mica trimmer.
C_6 to C_9, inc. — 0.005-μfd. mica.
C_{10} — 0.002-μfd. mica.
C_{11} — 250-μfd. mica.
C_{12} — 100-$\mu\mu$fd. mica.
R_1 — 200 ohms, ½-watt.
R_2 — 65,000 ohms, ½-watt.
R_3 — 50,000 ohms, ½-watt.
R_4 — 300 ohms, ½-watt.
R_5 — 20,000 ohms, ½-watt.
R_6 — 20,000 ohms, 2-watt.
RFC — In the 1852 plate circuit, a 2.5-mh. r.f. choke; in the oscillator circuit, a v.h.f. r.f. choke (Ohmite Z-1).
L_1 — 6 turns No. 14, ½-inch diameter, length 1 inch.
L_2 — 6 turns No. 14, ½-inch diameter, length ⅝-inch.
L_3 — 10 turns No. 14, ½-inch diameter, length 1¼ inches, tapped 4th turn from grid end.
I.F. Output Transformer — P, 25 turns No. 28 d.s.c. close-wound on ½-inch form; S, 6 turns wound over P at bottom; C, 35-$\mu\mu$fd. midget variable.

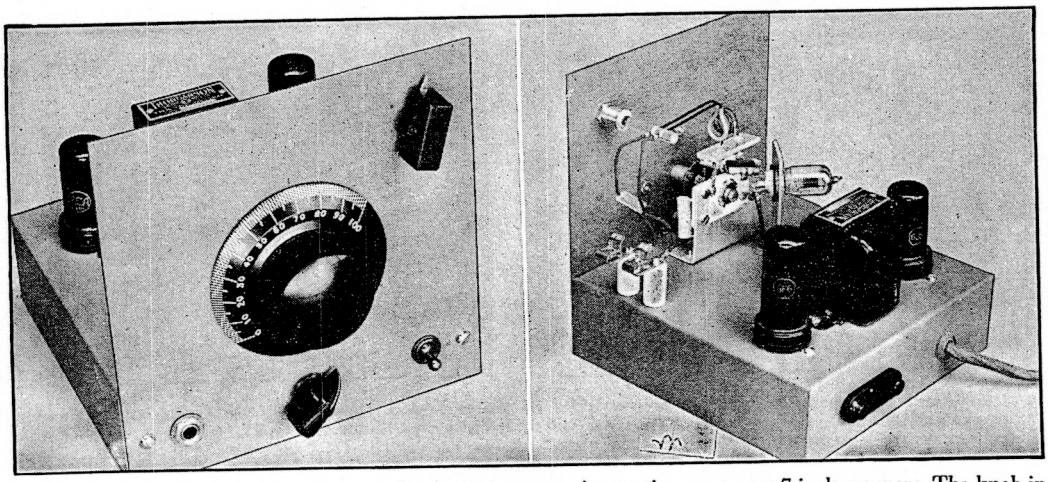

Fig. 1414 — Left — The panel of the two-band superregenerative receiver measures 7 inches square. The knob in the upper right-hand corner adjusts antenna coupling, while the knob below the tuning dial controls regeneration. *Right* — A rear view of the two-band superregenerative receiver, showing the variable antenna coupling and the placement of parts. Note the 224-Mc. coil in the foreground; the 112-Mc. coil is in the coil socket, in this view.

Tuning of the converter is as follows: With the r.f. and oscillator condensers at about half capacity, the padder, C_4, is adjusted until 56-Mc. stations of known frequency are heard. After this the padder may be set to bring the high-frequency end of the band near minimum capacity on C_3. The i.f. transformer should then be tuned for maximum signal strength. The 56–60-Mc. band will occupy approximately 60 to 70 divisions on the dial. The r.f. and mixer input circuits, L_1C_1 and L_2C_2, may be made to track by squeezing or spreading the turns of L_1 and L_2 until both cover the same frequency range, as determined by loosening C_1 from the coupling and turning it independently to see if it peaks the noise at the same setting as C_2.

Any type of antenna may be used, so long as it loads the r.f. grid circuit quite heavily. Optimum operation will result under these conditions. A single-wire antenna may be capacity coupled, while a two-wire feeder system should be inductively coupled. The coupling coil may be slightly smaller than the r.f. coil, L_1.

¶ A Superregenerative Receiver for 112 and 224 Mc.

The receiver shown in Figs. 1414, 1415 and 1416 has very good sensitivity on both 112 and 224 Mc., although it is not free from radiation as is a receiver with an r.f. stage. However, for the amateur who wishes to experiment on these two v.h.f. bands this receiver will permit good reception at a minimum of expense. There is nothing unusual about the circuit; it is the familiar type of self-quenched superregenerative detector, followed by two stages of audio amplification.

The receiver is built on a 7 × 7 × 2-inch chassis. The dial is mounted in the center of the panel and is connected to the tuning condenser by a flexible bakelite coupling. The condenser is mounted on a metal bracket, cut out in the shape of a **U** to clear the stator connections of the condenser.

The socket for the plug-in coils is made using contacts taken from an Amphenol 78-7P miniature tube socket. They are obtained by squeezing the socket in a vise until the bakelite cracks, after which they can be easily removed. One contact is soldered to each of the tuning condenser connections and a third is soldered to a lug supported by one of the extra holes in the Isolantite base of the tuning condenser. In mounting the contacts they must all be at the same height, so that the plug-in coil will seat well on them. The band-set condenser, C_2, is mounted by soldering short strips of wire to the ends and then soldering these wires to the tuning condenser terminals.

The polystyrene tube socket for the 9002 is mounted on a metal bracket, which is placed close enough to the tuning condenser to allow a very short lead from the tuning condenser to the plate connection and just enough room between the rotor of the condenser and the grid connection of the tube for the grid condenser. Heater and cathode leads are brought to the underside of the chassis through a rubber grommet.

The variable antenna coupling coil, L_1, is mounted on a polystyrene rod supported by a shaft bearing. The rod is prevented from moving axially in the bearing by cementing a fiber washer to the shaft and tightening the knob on the other side so that the shaft does not move too freely. The antenna coupling loop should be adjusted so that, as it is rotated, it will just clear the coils when they are plugged into the socket.

The coils are mounted on small strips of ⅛ inch polystyrene (Millen QuartzQ) as bases, which have three small holes drilled in them corresponding exactly to the tops of the coil sockets. Each coil is cemented to the strip with Duco cement at the points where the wire passes through the base. The No. 18 wire used

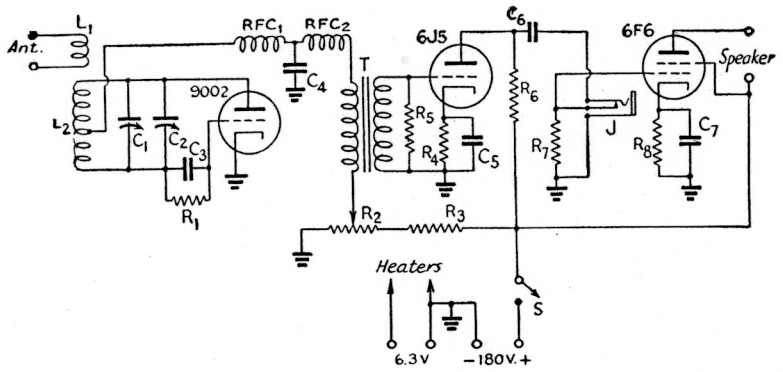

Fig. 1415 — Wiring diagram of the v.h.f. superregenerative receiver for 112 and 224 Mc.

C_1 — Two-plate variable (National UM-15, 4 plates removed).
C_2 — 3–30-$\mu\mu$fd. mica trimmer.
C_3 — 50-$\mu\mu$fd. mica.
C_4 — 0.003-μfd. mica.
C_5, C_7 — 10-μfd. 25-volt electrolytic.
C_6 — 0.01-μfd. 400-volt paper.
R_1 — 10 megohms, ½-watt.
R_2 — 50,000-ohm wire-wound potentiometer.
R_3 — 0.1 megohm, 1-watt.
R_4 — 2500 ohms, ½-watt.
R_5, R_6, R_7 — 0.1 megohm, ½-watt.
R_8 — 500 ohms, 1-watt.
J — Closed-circuit jack.
S — S.p.s.t. toggle switch.
T_1 — Single plate to single grid audio transformer (Thordarson T-57A36).
L_1 — 1 turn No. 14 e., ⅜-inch inside diameter.
L_2 — 112 Mc.: 3 turns No. 18 e., ½-inch diameter, ¼-inch long. Tapped 1¼ turns from plate end.
224 Mc.: 2 turns No. 18 e., ¼-inch diameter, spaced over ½ inch. Tapped at center.
RFC_1 — 25 turns No. 24 d.c.c. close-wound, ¼-inch diameter.
RFC_2 — 8 mh. r.f. choke.

for the coils will fit snugly in the sockets if the contacts are pinched slightly. A coil socket of this type allows very short leads to be used, and is about the only thing practical until some manufacturer brings out a commercial product along these lines. The coils are trimmed to the bands by spreading or squeezing the turns slightly by the procedure previously described. However, in this case the band-set condenser gives some further range of adjustment. In the receiver as described, it is screwed down fairly tightly for the 112-Mc. band and loosened about four revolutions for 224 Mc. If there are no good marker stations available by which frequency can be checked, an absorption frequency meter or the Lecher wire system described in Chapter Sixteen may be used for spotting the bands.

Two factors which will be found to influence the sensitivity of the receiver are the value of C_4 and the degree of antenna coupling. It is recommended that values of C_4 from 0.001 to 0.005 μfd. be tried. The antenna coupling will, of course, vary greatly with the setting of L_1 and

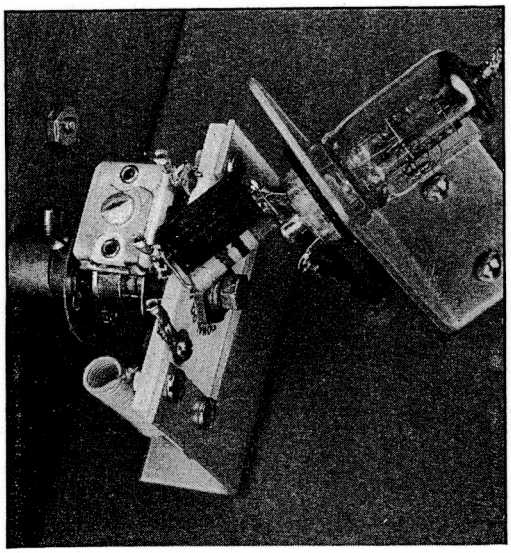

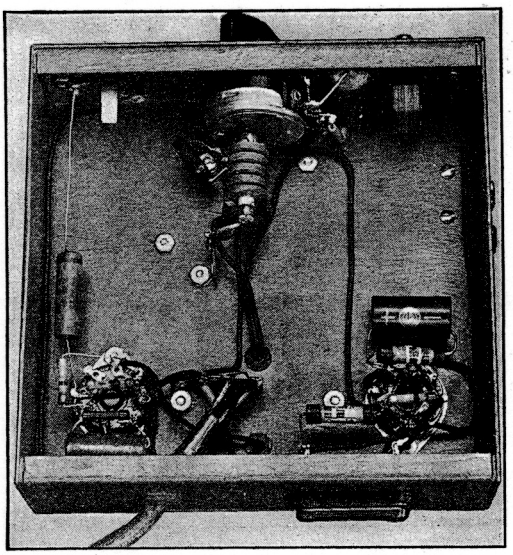

Fig. 1416 — Left — A close-up view of the tuning assembly, showing how the leads from the tuning condenser to the tube socket have been kept short and how the coil socket is mounted on the tuning condenser. Hidden by the grid condenser (the 50-$\mu\mu$fd. condenser so prominent in the picture), the plate terminal of the tube socket goes to a lug which has been added to the rotor of the tuning condenser. *Right* — The arrangement of parts under the chassis may be seen in this photograph. The 6J5 socket is at the left and the 6F6 socket is at the right, near the speaker terminals. The 8-mh. r.f. choke, seen just under the regeneration control at the top center, is supported by tie strips.

with the type of antenna used, and it is well worth while to tune the antenna circuit and then vary the coupling with the panel control. Tight coupling usually will give better results than loose coupling and the coupling can be increased almost up to the point where it is no longer possible to make the detector oscillate, with no ill effects except increased radiation and possible QRM for other receivers in the vicinity.

No audio volume control was included in this receiver because the parts were held down to a minimum, but one could easily be added. In this receiver, the value of R_7 was adjusted until normal loudspeaker output was obtained; this value may be varied to meet any particular requirements. (*Bib.* 3.)

A T.R.F. Superregenerative Receiver

The receiver shown in Figs. 1417, 1418, 1419 and 1420 is practically identical to that described in the foregoing section, with the exception that a stage of tuned r.f. amplification and an audio gain control have been added. The 9001 tube used for the r.f. amplifier gives some slight gain, freedom from antenna effects, and — most important of all — prevents radiation from the receiver.

The arrangement of parts, as shown in the photographs, is convenient in that it results in a fully shielded receiver (except for the r.f. tubes) which is easy to work on. The r.f. unit can be demounted from the chassis and worked with separately; once adjusted, it can be replaced and left alone. The receiver is a one-band affair, but the only disadvantage in this is a lack of economy. The main chassis, which measures 7 × 7 × 2 inches, contains the audio components and the volume and regeneration controls. The r.f. portion is housed in a 3 × 4 × 5-inch box with everything but the dial and the antenna terminals mounted on the removable cover, enabling the builder to get at the parts easily. Only three leads are brought down from this box to the main chassis, and these are left long enough so that they do not need to be unsoldered when the box is removed from the chassis. A shield mounted on the side of the box helps to prevent coupling between the r.f. and detector coils. Holes on either side of the box allow the trimmer condensers to be adjusted when the receiver has been finally assembled.

As can be seen from the close-up view of the r.f. portion, the two tuning condensers and the two sockets are mounted on the removable top of the box and support all of the components. The trimmer condensers are soldered directly to the tuning condenser terminals and the coils are self-supported by their leads. A tie strip takes the leads that run out of the box and also serves as a convenient point to fasten RFC_1, C_9 and some of the other resistors and condensers. The leads are not quite as short in this arrangement as they are in the receiver of Fig. 1414, but that makes no practical difference because this receiver is built only for 112 Mc. and does not have to tune down to 230 Mc.

The coils are wound on small polystyrene forms. It is suggested that the No. 20 wire secondary coils be wound first. The plate tap for L_4 should be soldered, and the coils can then be doped. When the dope has hardened, the fine-wire coils can be more easily wound in between the turns and fastened with dope. The

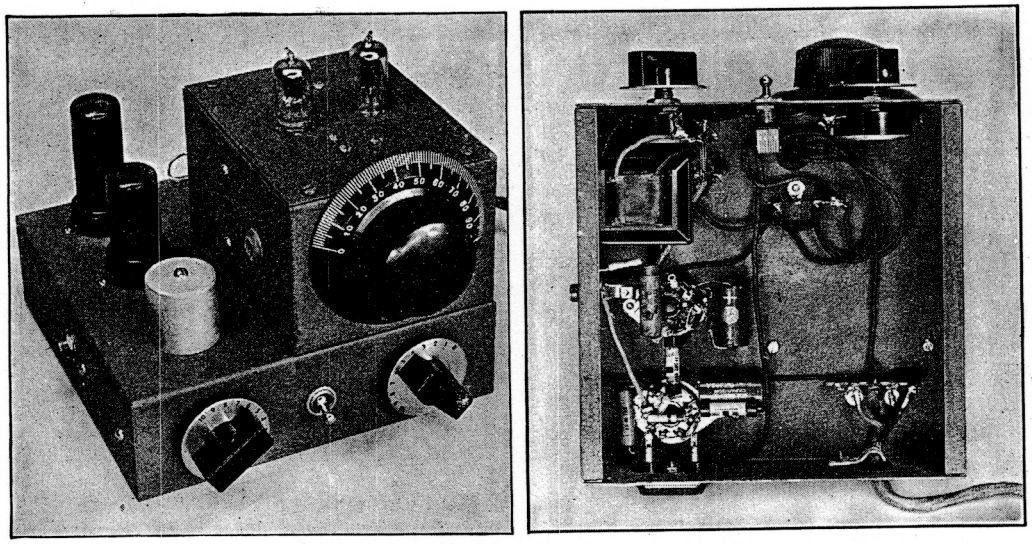

Fig. 1417 — Left — The 112-Mc. t.r.f. superregenerative receiver uses a 9001 in the r.f. stage, 9002 detector, 6J5 first audio, and 6F6 output stage. The knobs along the front are audio volume control (left) and the regeneration control. The rubber grommet on the side of the 3 × 4 × 5-inch box centers the screwdriver used for setting the detector band-set condenser; a similar one is provided on the other side for the r.f. band-set adjustment. Note the 'phone jack on the side; the speaker terminals are located at the rear. *Right* — A view under the chassis of the t.r.f. receiver shows the audio transformer and the arrangement of some of the other components. The three wires coming through the chassis to the right of the "B +" switch are the leads from the r.f. section of the receiver.

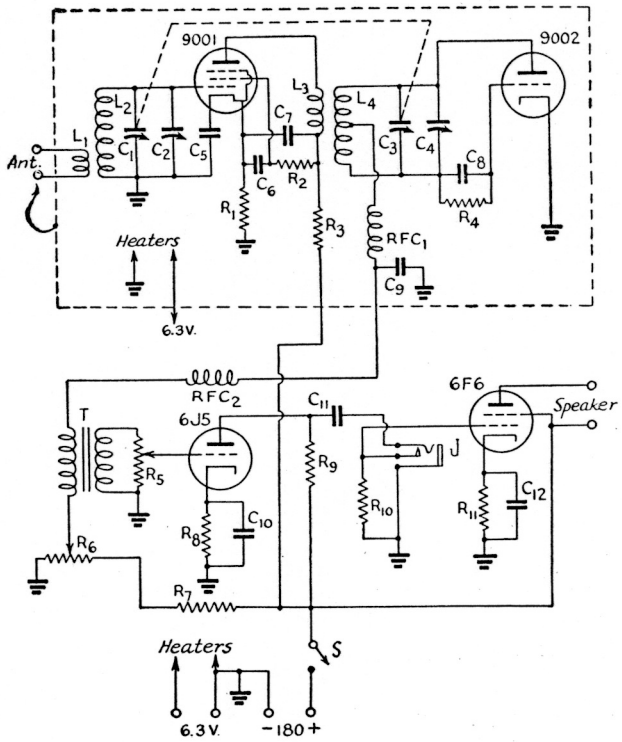

Fig. 1418 — Wiring diagram of the tuned r.f. superregenerative receiver for 112-Mc.

C_1, C_3 — 2-plate midget variable (National UM-15 with 4 plates removed), ganged.
C_2, C_4 — 3–30-$\mu\mu$fd. mica trimmer.
C_5, C_6, C_7 — 500-$\mu\mu$fd. mica.
C_8 — 50-$\mu\mu$fd. mica.
C_9 — 0.003-μfd. mica.
C_{10}, C_{12} — 10-μfd. 25-volt electrolytic.
C_{11} — 0.01-μfd. 400-volt paper.
R_1 — 200 ohms, ½-watt.
R_2 — 0.25 megohm, ½-watt.
R_3 — 10,000 ohms, ½-watt.
R_4 — 10 megohms, ½-watt.
R_5 — 0.5-megohm volume control.
R_6 — 50,000-ohm wire-wound variable.
R_7, R_9 — 0.1 megohm, 1-watt.
R_8 — 2500 ohms, ½-watt.
R_{10} — 0.5 megohm, ½-watt.
R_{11} — 500 ohms, 1-watt.
L_1 — 1⅔ turns No. 28 d.s.c. interwound between turns of L_2.
L_2 — 2 turns No. 20 e., ¼-inch winding length. See text for trimming method.
L_3 — 1½ turns No. 28 d.s.c. interwound between turns of L_4.
L_4 — 2¼ turns No. 20. e., ¼-inch winding length. Tapped ½ turn from plate end. See text on how to trim.
(L_1-L_2 and L_2-L_4 on National PRE-1 forms.)
RFC_1 — V.h.f. r.f. choke (Ohmite Z-1).
RFC_2 — Low-frequency choke (National OSR with windings in series, "B +" and "Gnd" connected together).
J — Closed-circuit jack.
S — S.p.s.t. toggle switch.
T_1 — Single plate to single grid audio transformer (Thordarson T-13A34).

No. 20 wire leads run through holes in the forms, while dope only is used to keep the fine-wire coils secure. This has the advantage that the fine-wire coils can be trimmed by "peeling off" a small fraction of a turn at a time. The larger coils are trimmed by bringing the last half-turn back through the *inside* of the coil. By moving this half-turn around, the inductance of the coil can be adjusted over a range wide enough to allow the detector and r.f. circuits to track well over the whole band. This method of inductance trimming is described elsewhere in this *Handbook* (§ 7-7).

The r.f. stage is trimmed by adjusting its trimmer condenser to the point where the regeneration control has to be set at a maximum. Either side of this point the control does not have to be advanced as far, indicating that the r.f. stage is not in resonance. When the r.f. and detector circuits are tracking properly, it will not be necessary to change the setting of the regeneration control more than 45° or so over the entire range. The bandspread can be increased by using less inductance and more trimmer capacity. With the coil specifications given, the band covers about 75 dial divisions.

A two-wire line from the antenna usually will prove best. It should be tried with one side grounded or not, to see which gives the better coupling. In one instance where a single-wire antenna was used some instability of the r.f. amplifier was traced to the antenna wire running too close to the detector tube, and it is recommended that the antenna wire or wires be run away in such a fashion that there is no chance for coupling of this type. (*Bib.* 3.)

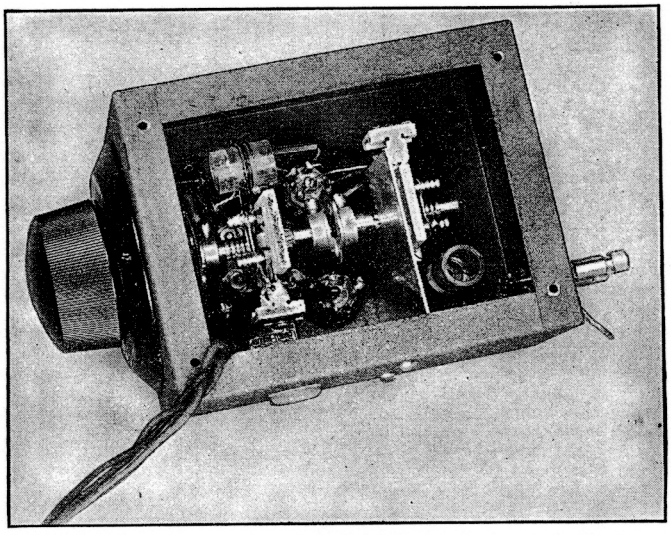

Fig. 1419 — The r.f. section of the 112-Mc. t.r.f. receiver removed from the chassis. The detector tuning condenser, C_3, is nearest the tuning dial and the detector socket is at the bottom of the picture. The interstage shield is fastened to the side of the box. The trimming loop for adjusting inductance can be seen on the r.f. coil, near the antenna posts at the right.

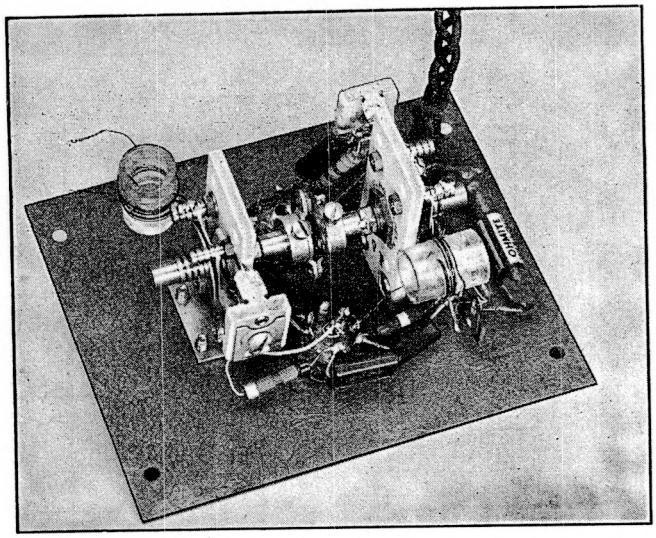

Fig. 1420 — Close-up of the r.f. assembly of the 112-Mc. t.r.f. receiver, showing arrangement of parts. The band-set condensers are mounted on the tuning condensers. The ends of the antenna coil (upper left) are soldered to the antenna posts after the assembly is mounted in the box.

¶ F.M. I.F. Amplifiers

As pointed out earlier in this chapter, an f.m. receiving system differs from an a.m. receiver in that the pass-band is wider and a limiter and discriminator are used instead of a second detector. The front end of an f.m. receiver is conventional, and any of the converters described can be used to feed an f.m. i.f. amplifier. The f.m. i.f. amplifier may be either the i.f. amplifier of an f.m. broadcast receiver (of which there are several on the market) or it can readily be built by the amateur. If the i.f. system of the f.m. broadcast receiver is used, the i.f. frequency should be learned so that the output of the converter can be tuned to this frequency and coupled to the grid of the mixer tube of the receiver. If the converter is already built, a separate converter to work from the first converter into the f.m. intermediate frequency can be used. Such a device is shown in Fig. 1421.

Since most of the available broadband i.f. transformers suitable for f.m. reception are built for frequencies of 5, 4.3 and 3 Mc., it is necessary to use a second conversion between the output of the converter (usually 10 Mc.) and the f.m. i.f. system, unless the converter is rebuilt to give output on the f.m. intermediate frequency. Such a converter can be made using a single 6K8 tube. The circuit and necessary constants are given in Fig. 1421. The combination of C_1L_2 is tuned to the converter output frequency. T_1 is the input transformer of the f.m. amplifier, and L_3C_2 is tuned to the sum of the converter output frequency plus the f.m. amplifier frequency. For example, a converter giving 10-Mc. output and working into a 5-Mc. i.f. amplifier will have the oscillator circuit (L_3C_2) tuned to 10 + 5 or 15 Mc.

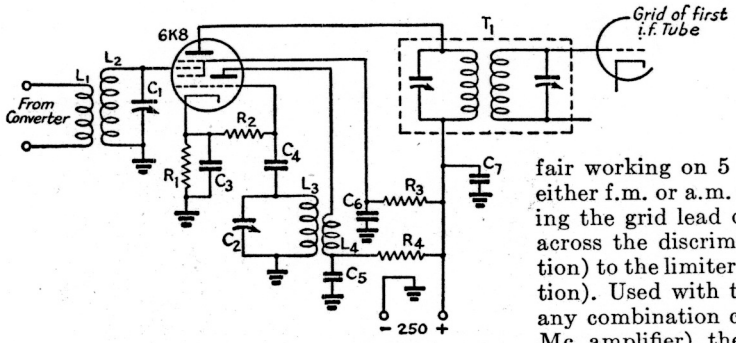

Fig. 1421 — Circuit diagram of a separate frequency converter for use with the f.m. amplifier of Fig. 1423.

C_1, C_2 — 100-$\mu\mu$fd. midget variable.
C_3, C_6, C_7 — 0.01-μfd. 400-volt paper.
C_4 — 50-$\mu\mu$fd. mica.
C_5 — 0.002-μfd. mica.
R_1 — 250 ohms, ½-watt.
R_2 — 50,000 ohms, ½-watt.
R_3 — 25,000 ohms, 1-watt.
R_4 — 50,000 ohms, 1-watt.
T_1 — Input transformer of f.m. i.f. amplifier.
L_1 — 4 turns No. 22 d.c.c., close-wound, ¼-inch from L_2.
L_2 — 10 Mc.: 11 turns No. 22 d.c.c., close-wound on 1-inch diameter form.
L_3 — 15 Mc.: 6 turns No. 22 d.c.c., close-wound on 1-inch diameter form. 13 Mc.: 6 turns No. 22 d.c.c., close-wound on 1-inch diameter form.
L_4 — 2 turns No. 22 d.c.c., close-wound; spacing from L_3 adjusted to give 0.15 ma. d.c. through R_2.

¶ A 5-Mc. F.M. I.F. System

The i.f. amplifier shown in Figs. 1422, 1423 and 1424 is a broad-band affair working on 5 Mc. which can be used for either f.m. or a.m. reception merely by switching the grid lead of the first audio tube from across the discriminator load (for f.m. reception) to the limiter grid resistor (for a.m. reception). Used with the converters described (or any combination capable of working into a 5-Mc. amplifier), the system can be used for the reception of a.m. and f.m. signals in the 43-Mc. band, a.m. and f.m. amateur signals in the 56-Mc. band, or f.m. and a.m. signals in the 112-Mc. band. If operators of 112-Mc. stations using modulated oscillators will reduce the modulation percentage and thus bring the frequency deviation down to a reasonable range, the system will make an excellent receiver for the reception of modulated oscillators. When operated with reduced modulation even the smallest transceiver will sound many times better, and audio power will be saved, as well.

As may be seen from Fig. 1423, the two stages of high-gain amplification using type 1852 tubes are unconventional only in that re-

sistors are used across the transformer windings to widen the pass band, and no gain control is included. No means of controlling gain is required, because it is always desirable to work the stages preceding the limiter at their highest level. The limiter stage uses a 6SJ7, with provision through R_{18} to control the plate and screen voltage to set the limiting action to meet operating conditions. The use of a grid leak and condenser, R_{16} and C_7, and low screen and plate voltages allows the tube to saturate quickly, even at low signal levels, and the tube wipes off any amplitude modulation (including noise) and passes only frequency modulation. For a.m. reception, the audio system is switched by Sw_1 to the grid leak, R_{16}, and the grid and cathode of the tube are used as a diode rectifier to feed the audio system. The jack, J, in series with the grid leak, is used for plugging in a low-range milliammeter so that the limiter current can be read. The limiter-current indication is invaluable in aligning the amplifier, and the meter can be used as a tuning meter during operation.

The discriminator circuit uses a 6H6 double diode in the conventional circuit. Audio from the discriminator (or from the limiter stage, in a.m. reception) is fed through the volume control, R_{25}, into a two-stage audio amplifier using a 6SF5 and 6F6 output pentode. The resistor, R_{11}, and condenser, C_{12}, in the input of the audio circuit, serve as a combined r.f. filter and compensating network to attenuate the higher audio frequencies. This is necessary when listening to 43-Mc. broadcast stations, since nearly all use "pre-distortion" (accented higher frequencies). A 0.01-μfd. condenser across the output terminals will give further high frequency compensation, if necessary.

The power supply uses a two-section filter, and an outlet socket is provided so that the converter power cable can be plugged in. A VR150-30 regulator tube is used for additional stability with changes in line voltage. The regulator tube is not absolutely necessary, and, if desired, it may be omitted.

The amplifier is built on a 7 × 9 × 2-inch chassis. Reference to Figs. 1422 and 1424 will show the location of the parts on the chassis. After all holes have been drilled the sockets and the transformer should be fastened in place on the chassis, leaving off the variable resistors, switches, binding posts, jack and chokes until after most of the wiring has been done.

If low-impedance input coupling is to be used, as with a converter removed some distance from the amplifier, the first i.f. transformer must be modified. A link winding is made by first winding a short half-inch wide strip of paper over the cardboard tubing used as a form in the i.f. transformer. Eleven turns of No. 30 d.s.c. wire are then close-wound flat over the center of the paper ring. Holding the wire in place with a finger, paint the coil with Duco cement to secure the turns in place. When the cement has dried, slip the coil off the form. The plate and "B"+ wires may be removed from the trimmer condenser in the transformer, and the wires from the plate coil to the trimmer condenser disconnected. By unwinding and cutting off a turn or two of paper from the inside of the paper ring, the 11-turn coil can be slipped easily over the grid coil and fastened in position so that it covers the ground end of the grid coil. A piece of paper between the grid coil and the ground lead will avoid any possibility of this lead shorting against the turns of the coil when the paper ring is slipped in place. The two ends of the link coil are brought out the bottom of the shield can and later fastened to the input terminals of the set.

It is possible to use the transformer by merely running the plate lead to the mixer tube in the converter, but this makes it less convenient to use the converter with other i.f. amplifiers since it would require soldering and unsoldering wires each time the change was made. Furthermore, the long lead to the mixer tube would increase the chances for stray pick-up of signals in the vicinity of 5 Mc.

The screen by-pass condensers, C_1, C_4 and C_8, are mounted across the sockets so that they act as partial shields between the plates and grids of the single-ended tubes. Tie-points are used wherever needed for mounting the resistors and condensers. It is recommended that the 1852, 6SJ7 and 6H6 stages be wired first, so that the leads carrying r.f. can be made as short and direct as possible. The rest of the leads may

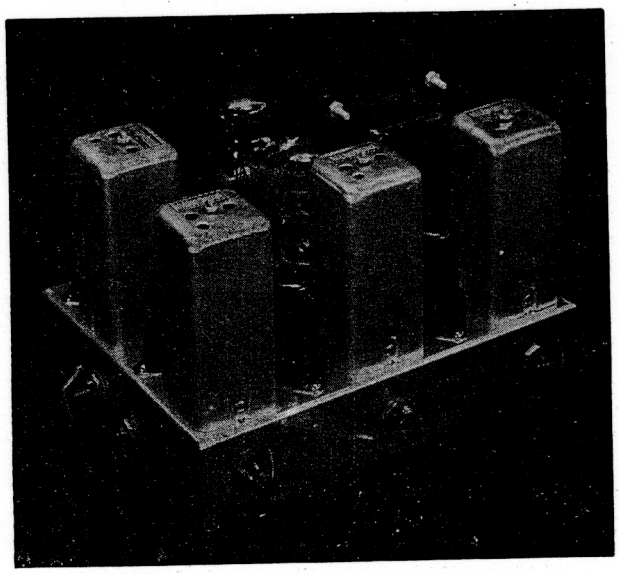

Fig. 1422 — A 5-Mc. f.m./a.m. amplifier, complete with power supply. Controls on the front, from left to right, are the audio volume control, "B"+ switch, and the limiter control. The f.m./a.m. switch is on the end. The jack beside it is for the limiter-current meter.

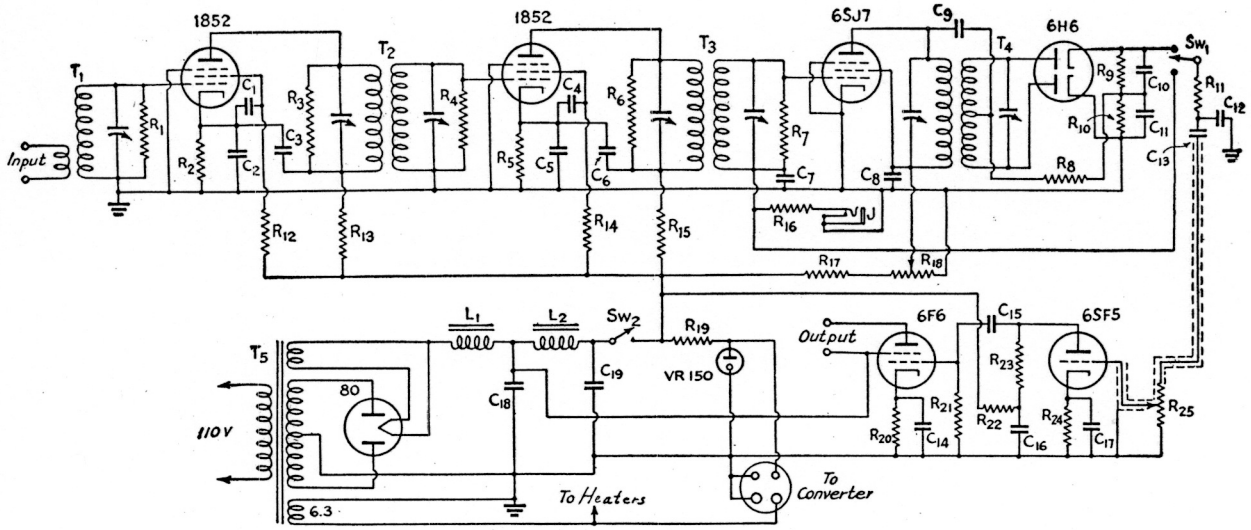

Fig. 1423 — Wiring diagram of the broad-band 5-Mc. frequency-modulated/amplitude-modulated i.f. amplifier.

C_1, C_2, C_3, C_4, C_5, C_6, C_8, C_{13}, C_{15} — 0.01-μfd. 600-volt paper.
C_7, C_{10}, C_{11} — 100-$\mu\mu$fd. midget mica.
C_9 — 50-$\mu\mu$fd. midget mica.
C_{12} — 0.001-μfd. midget mica.
C_{14}, C_{17} — 10-μfd. 25-volt electrolytic.
C_{16}, C_{18}, C_{19} — 16-μfd. 450-volt electrolytic.
R_1, R_4 — 55,000 ohms, ½-watt.
R_2 — 200 ohms, ½-watt.
R_3, R_6 — 50,000 ohms, ½-watt.
R_5 — 300 ohms, ½-watt.
R_7 — 40,000 ohms, ½-watt.
R_8, R_{11}, R_{22} — 75,000 ohms, ½-watt.
R_9, R_{10}, R_{16} — 150,000 ohms, ½-watt.
R_{12}, R_{14} — 60,000 ohms, ½-watt.
R_{13}, R_{15} — 100 ohms, ½-watt.
R_{17} — 25,000 ohms, 10-watt wirewound.
R_{18} — 3000-ohm wire-wound potentiometer.
R_{19} — 5000 ohms, 10-watt wirewound.
R_{20} — 500 ohms, 1-watt.
R_{21}, R_{23} — 250,000 ohms, ½-watt.
R_{24} — 5000 ohms, ½-watt.
R_{25} — 500,000-ohm volume control.
T_1 — 5-Mc. f.m. i.f. input transformer, modified (see text)
(Millen 67503).
T_2, T_3 — 5-Mc. f.m. interstage transformer (Millen 67503).
T_4 — 5-Mc. f.m. discriminator transformer (Millen 67504).
T_5 — 350-0-350-volt 90-ma. power transformer with 6.3- and 5-volt filament windings.
L_1 — 9-henry 85-ma. filter choke (Thordarson T-13C29).
L_2 — 10-henry 65-ma. filter choke (Thordarson T-13C28).
Sw_1 — Selector switch (Yaxley 32112-J).
Sw_2 — On-off switch, s.p.s.t. toggle.
J — Closed-circuit jack.

be filled in wherever convenient. The wires from the audio volume control, R_{25}, are shielded by a length of flexible copper braid. Whenever convenient, spare pins on sockets are used to support resistors, condensers, etc.

The two variable resistors mounted on the front of the chassis will not clear the spade bolts projecting down from the i.f. transformers unless about ⅛ inch is cut off the bolts before mounting the transformers in place. The input terminal strip (Millen 3300Z) is mounted on the outside of the chassis so that the contacts will clear the limiter control. A handy connector for plugging into this input terminal can be made from an old five-prong tube base or coil form, sawing across the base and removing the two correctly spaced pins and their supporting strip of bakelite.

With a 5-Mc. signal source, such as a signal generator, alignment of the amplifier is an easy matter. If no such source is available a simple e.c.o. can be built using an ordinary receiving pentode such as a 6K7, with the grid circuit on 2.5 Mc. and the plate on 5 Mc. Or, if a converter is available, tune the regular receiver to 5 Mc., couple in the converter and tune in a strong, steady signal. The converter output can then be transferred to the f.m./a.m. i.f. and the transformers aligned. This is done by plugging in a 0-1 ma. meter into the jack, J, and tuning the trimmers of the transformers for maximum current. It may be necessary to hunt around a bit before the meter shows any indication, but once it starts to read the rest is easy. With a variable-frequency signal source the signal is swung back and forth until some indication is obtained, and then the amplifier alignment is completed. The exact frequency of alignment is unimportant provided every stage can be tuned *through* resonance, which means that each trimmer can be adjusted through a maximum reading of the tuning meter. With the resistors across the circuits, it will be found that the transformers tune somewhat broader than normal; the correct setting is in the midpoint of the broad region. Once the i.f. transformers, T_1, T_2 and T_3, are aligned, it should be possible to switch Sw_1 to a.m. reception and hear signals, or at least noise, provided the converter is on 56 or 43 Mc. There isn't much noise to be heard on 112 Mc.

The alignment procedure can be carried out with a loudspeaker connected to the 6F6 through an output transformer. If no speaker is used at this point, however, the output terminals should be shorted; otherwise, the 6F6 may be injured. The use of a meter for alignment is a practical necessity, and no attempt should be made to line up the amplifier by ear except possibly for only a very rough initial alignment.

If there is an f.m. broadcast station within range, adjustment of the discriminator transformer, T_4, is a simple matter. Switch the amplifier to a.m., plug in the proper coils in the converter, and tune in the f.m. station. Then switch the amplifier to f.m. and tune the trimmers on T_4 until the signal is heard again. This is best done with the audio gain almost open and the limiter control at about half-scale. The trimmers are best adjusted with an insulated tool, to reduce body capacity effects, and they should be adjusted until the b.c. signal is clearest and loudest. It will be found that the trimmers in the plate circuit will affect the volume mostly, while the trimmer in the grid circuit will have the greatest effect on the quality. During this period of adjustment the receiver should be kept tuned to the signal, as indicated by maximum limiter current. An audio output meter, if available, may be used to determine maximum audio output, but this is not an essential.

In the event there is no local f.m. broadcast station the only alternative is to line up the discriminator on an f.m. signal from an amateur station, or, as a last resort, from a 112-Mc. modulated oscillator. The disadvantage with the self-excited v.h.f. oscillator is that usually it is modulated too heavily and doesn't stay on one frequency long enough to allow the amplifier to be aligned accurately.

The final adjustment of the discriminator tuning can be checked by tuning in an a.m. signal. If the discriminator is properly tuned, the audio output (signal and noise) should practically disappear at the point where the signal, as indicated by limiter current, is a maximum. This is an indication that the discriminator characteristic crosses the axis at the mid-resonance point of the amplifier. Tuning the signal (by tuning the converter), it should be possible to understand the audio output at points either side of this minimum-volume setting. These points should appear symmetrically on either side of the minimum-volume point and should have about the same volume. Slight readjustment of the discriminator-transformer setting will accomplish this result.

When using the amplifier it will be noted that a.m. signals appear to be louder than those from f.m. stations, comparing audio volume-control settings on stations showing equal limiter current. This does not indicate that the amplifier is not working properly or that more audio is obtained from an a.m. signal than from an f.m. signal of similar strength. It is, however, an indication that the discriminator characteristic could have more slope to it and not have its peaks so far apart. With improved discriminator-transformer construction, this apparent shortcoming will disappear.

The performance of the amplifier on a.m. reception could be improved somewhat by the inclusion of a.v.c. on the two 1852 tubes, taking the a.v.c. voltage from the limiter grid leak through the usual filter circuit. However, this was considered an unnecessary refinement because the amplifier was intended to be used primarily on f.m. reception and the provision for a.m. reception was considered of secondary importance. The amplifier should be run "wide open" on f.m. reception. (*Bib.* 4.)

¶ A Compact 112-Mc. Receiver for Mobile Work

The receiver shown in Figs. 1425, 1426 and 1428 is designed especially for mobile installations and particularly as a companion unit to the transmitter of Fig. 1541. The receiver is built in a 3 × 4 × 5-inch box (the same size as the control box) which can be mounted on top of the control box or alongside it, depending on the available room in the car. As may be seen from the wiring diagram (Fig. 1426), a 6V6 audio output tube is used. This stage will furnish more than enough output to operate a 5- or 6-inch speaker. Power for the receiver can be obtained from the same power supply as is used for the transmitter, and the on-off switching of the receiver may be tied in with the transmitter control to facilitate changing over. Alternatively, any other power supply delivering over 200 volts may be employed.

A 9002 superregenerative detector is used, followed by a 6J5 and 6V6 audio amplifier. The antenna is inductively coupled to the de-

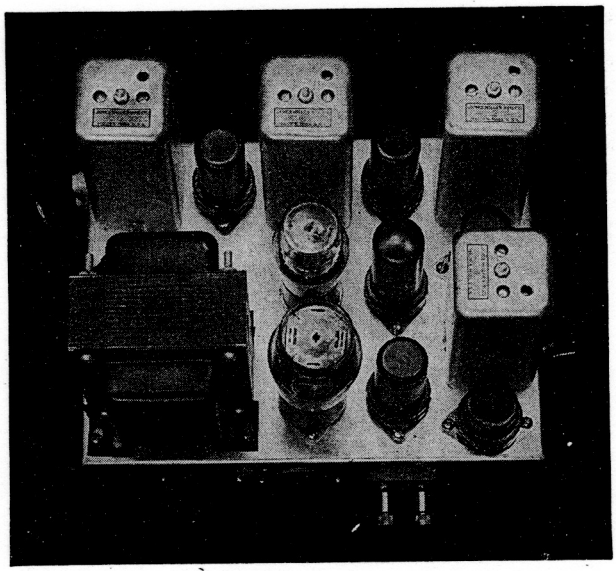

Fig. 1424 — A top view of the f.m./a.m. amplifier. Along the rear, from left to right, are the input transformer, first 1852 tube, interstage transformer, second 1852 tube, and second interstage transformer. In the second row of tubes, from right to left, are the 6SJ7 limiter, 6F6 audio output and VR150-30 voltage regulator. At the right front is the discriminator transformer, with the 6H6 detector below it. To the left of the 6H6 is the 6SF5 first audio. Output terminals, power socket, and 115-volt line cord are on the lower edge.

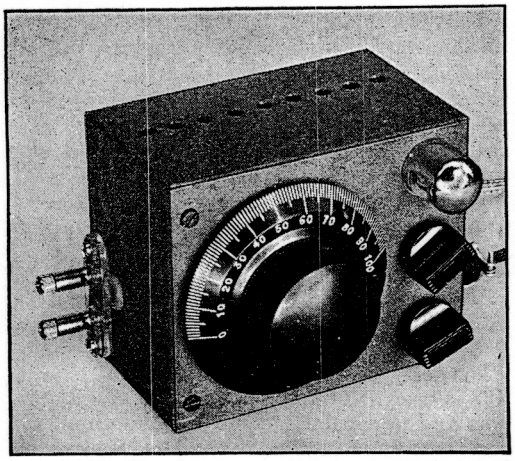

Fig. 1425 — The mobile 112-Mc. receiver is built in a 3 × 4 × 5-inch metal box. Antenna terminals and the hole used for adjustment of the antenna coupling may be seen on the left side. A pilot light at the top right-hand corner permits easy reading of the dial in night operation. The speaker cable runs out through the rear of the cabinet. Ventilating holes are drilled in the top.

tector, the antenna coupling being adjusted at the time of installation of the receiver. A band-set condenser, C_2, across the variable tuning condenser, C_1, allows the band to be centered on the tuning scale and provides adequate bandspread. Regeneration is controlled by the variable resistor, R_8.

The construction of the receiver is not difficult, but close attention must be paid to the placement of parts in order that all of the components will fit into the box. The first step in laying out the receiver is to drill the holes for the dial. The tuning condenser shaft is centered between the top and bottom of the panel and is located 1¾ inches in from the left-hand edge. Mounting holes for the tuning condenser are drilled using the Isolantite end-plate for a template, and the condenser is supported on 1⅜-inch spacers. The condenser is coupled to the dial through a flexible bakelite coupler and a short length of polystyrene rod, insuring adequate insulation between the condenser and the panel. Holes for the variable resistors and the pilot-light socket are drilled at the right-hand edge of the panel, ¾-inch in from the edge. The cabinet must be notched with a file to allow the resistors and socket to clear when the unit is assembled.

A small bracket of 1/16-inch metal which supports the 9002 socket is attached to the tuning condenser. A good idea of the shape of this bracket may be obtained from Fig. 1428. The tuned-circuit coil, L_1, is mounted between the stator terminal of C_1 and the terminal for pin No. 1 on the tube socket. C_2 is soldered across the terminals of C_1. A hole must be drilled in the bottom of the box, just below the adjustment screw for C_2, so that any necessary changes in the band-set adjustment can be made after the receiver is completely assembled.

The two audio tubes and the audio transformer are mounted in the metal box itself, as may be seen in Fig. 1428. The tube sockets are supported off the side of the box by small brass spacers, so that the socket pins will not short on the metal of the box. It is convenient to make the connections to these sockets before they are mounted in place. The d.c. power-supply leads are brought to a two-prong female socket, located directly in front of the 6J5 socket. All connections at ground potential are made directly to the panel or case, so that when the unit is assembled the necessary connections will be made automatically.

Three rows of ¼-inch diameter holes, one along the top of the case and two along the rear panel, should be drilled in the box before actual construction is begun. These holes provide internal ventilation for the unit and prevent excessive heat from causing possible failure of the paper condensers.

The receiver may be connected to the power supply and antenna to be used for testing be-

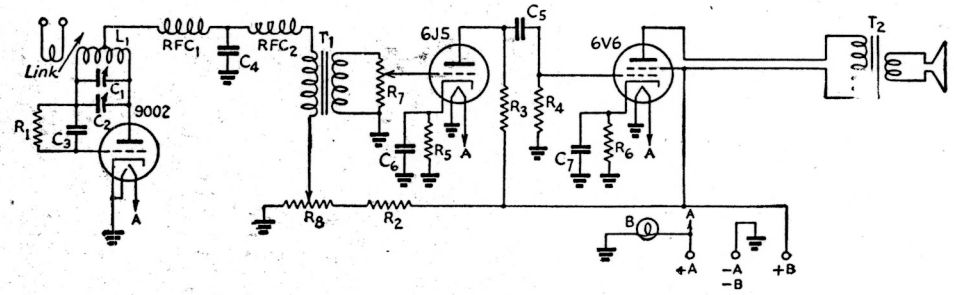

Fig. 1426 — Wiring diagram of the compact 112-Mc. superregenerative receiver for mobile operation.

C_1 — 15-μμfd. variable with four plates removed (National UM-15).
C_2 — 3–30-μμfd. mica trimmer.
C_3 — 50-μμfd. mica.
C_4 — 0.003-μfd. mica.
C_5 — 0.01-μfd. mica.
C_6, C_7 — 10-μfd. 25-volt electrolytic.
R_1 — 10 megohms, ½-watt.
R_2, R_3 — 0.01 megohm, ½-watt.
R_4 — 0.25 megohm, ½-watt.
R_5 — 2500 ohms, ½-watt.
R_6 — 500 ohms, 1-watt.
R_7 — 0.5-megohm volume control.
R_8 — 50,000-ohm variable.
L_1 — 3 turns No. 12, ½-inch diameter, spaced diameter of wire.
Link — 1 turn No. 12, M-inch diameter.
RFC_1 — V.h.f. choke (Ohmite Z-1).
RFC_2 — R.f. choke (Meissner 19-1995).
T_1 — Plate-to-grid coupling transformer (Inca G-52).
T_2 — Speaker output transformer, 10,000 to 4 ohms (Jensen Z2362).
Speaker — 5-inch p.m. dynamic (Jensen ST-443).

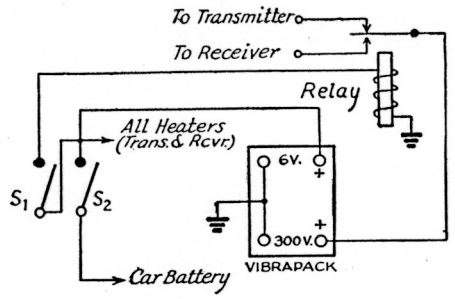

Fig. 1427 — Wiring diagram of the control circuit for the mobile station. S_1 and S_2 are mounted in the control box, along with the microphone jack and battery (see Fig. 1535). The vibrator supply and relay are mounted in the trunk compartment along with the transmitter.

S_1 — S.p.s.t. toggle switch.
S_2 — S.p.s.t. heavy-duty toggle switch.
Relay — 6-volt s.p.d.t. relay.

fore it is installed in the car. Testing in this manner allows accurate setting of the band and preliminary adjustment of the antenna coupling. The antenna coupling is finally adjusted so that the receiver will superregenerate well over the whole range of the dial without any dead spots, but too-loose coupling is to be avoided because it will reduce the sensitivity of the receiver. The adjustment that requires that the regeneration control be set towards the maximum end of its range before the set will superregenerate is the correct one.

The control unit shown in Fig. 1427 allows the operator to use only one switch to turn the receiver on and the transmitter off, and vice versa. When putting the station into operation, S_1 should be closed first and then S_2. Closing S_2 will apply voltage to the heaters of both transmitter and receiver tubes, turn on the vibrator supply, and close the relay. This last action places the plate voltage on the receiver. When switching over to "transmit," S_1 is opened, releasing the relay and placing the vibrator output on the transmitter. During a QSO, it is necessary only to throw S_1 when changing from "receive" to "transmit" and back again. Separate antennas are recommended — one located at the usual front position of the car for the receiver, and one at the rear of the car for the transmitter. The receiving antenna may be a ¼-wavelength or ½-wavelength vertical rod fed by a concentric line. If a ½-wavelength receiving antenna is used, it is advisable either to make the length of the concentric line an odd multiple of a quarter wavelength or to adjust the antenna length for optimum coupling to the receiver.

If concentric-line feed from the antenna is used it is recommended that the type of concentric line which has insulation over the outer conductor be employed, with the outer conductor grounded at both the antenna end and the receiver end. If there is no insulating covering over the outer conductor the vibration of the car may cause occasional grounds at points along the external conductor, changing the loading and consequently the tuning of the receiving during operation.

In general, noise reduction procedure is the same as that followed for automobile receivers used on the broadcast band. Anything which contributes to quieter broadcast reception will be of help in connection with 112-Mc. operation. However, since every car is essentially an individual problem, no specific instructions can be offered.

If the car does not have a light located conveniently on the dashboard the cap may be removed from the pilot light, giving enough light by which to see the log book and note pad.

BIBLIOGRAPHY

[1] Grammer, "New Miniature V.H.F. Receiving Tubes in a 56- and 112-Mc. Converter," *QST*, September, 1941.
[2] Goodman, "A Practical 112-Mc. Converter," *QST*, March, 1940.
[3] Goodman, "Two V.H.F. Receivers Using the 9000 Series Tubes," *QST*, November, 1941.
[4] Goodman, "A 5-Mc. F.M. I.F. Amplifier," *QST*, April, 1940.

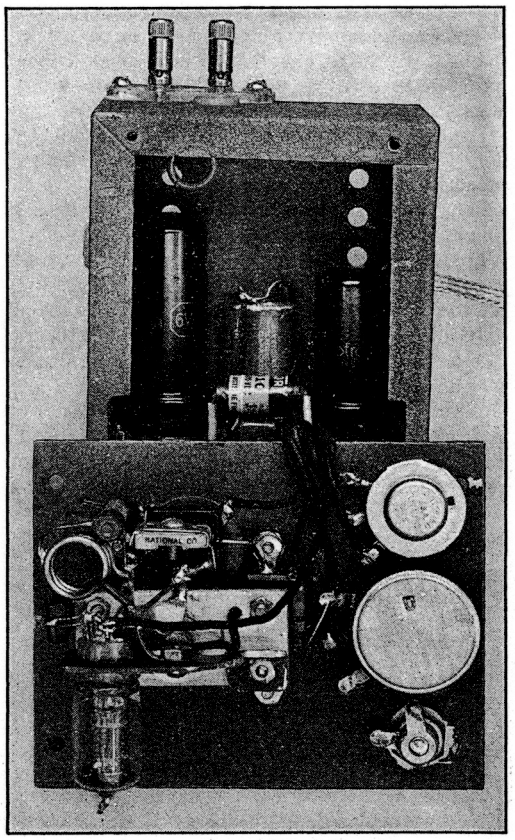

Fig. 1428 — An interior view of the mobile receiver, exposing the detector assembly on the side panel and showing the audio tubes mounted inside the box. The antenna link is connected to the antenna terminals and fits into its proper position when the unit is assembled.

CHAPTER FIFTEEN

V.H.F. Transmitters

THE very-high frequency region is generally considered to have its lower frequency limit in the vicinity of the 28-Mc. band, and it is also in about this region that it becomes desirable to adopt more compact methods of construction and to select tubes with particular care. As the frequency becomes higher the length of connecting leads becomes more important, because a length of a few inches may represent a considerable fraction of the operating wavelength. Tube interelectrode capacities, as well as the stray capacities normally existing, also must be given particular attention, because an unduly high shunt capacity in the circuit not only may reduce the efficiency but also will ultimately set the upper limit of frequency at which the transmitter can be made to work. For best results at very-high frequencies, tubes designed to operate well in that region must be used. All of these considerations indicate the advisability of building separate r.f. equipment for transmission at very-high frequencies, rather than attempting to adapt for v.h.f. use a transmitter primarily designed for operation at ordinary communications frequencies.

Transmitter stability requirements for operation in the 56-Mc. band are the same as for the lower-frequency bands. Above 112 Mc. there are no restrictions as to frequency stability except that the whole of the emission must be confined within the band limits. Modulated-oscillator type transmitters therefore can be used above 112 Mc. and are, in fact, used practically exclusively above 224 Mc., since few available tubes will operate satisfactorily as amplifiers at this high frequency. However, up to 60 Mc. methods similar to those employed in the transmitters described in Chapter Twelve can be used.

Most of the 56-Mc. transmitters shown in this chapter are crystal controlled, for use with amplitude modulation. However, they can be adapted for f.m. by replacing the crystal with excitation from an f.m. oscillator similar to that described in Figs. 1519, 1520 and 1521. Higher-powered transmitters can be built by adding amplifiers to the units shown, basing the design of the amplifier on the medium-power unit shown in Fig. 1516.

A 10-Watt 56-Mc. Transmitter

The transmitter shown in Figs. 1501, 1502, 1503 and 1504 is an inexpensive affair using 6A6-type tubes throughout. As can be seen from Fig. 1503, one section of the first tube is used as a triode crystal oscillator on 7 Mc. while the second half doubles to 14 Mc. The two sections of the second tube are used as 28- and 56-Mc. doublers, and the third tube is a push-pull final amplifier. Capacitive interstage coupling is employed throughout except between the 56-Mc. doubler and the grid circuit of the final, where inductive coupling is used.

In the oscillator, parallel plate feed permits grounding the rotor plates of the tuning condenser; since the following grid circuit is series-fed, there is no essential difference in r.f. performance between this and the more common circuit with series plate and parallel grid feed. Cathode bias allows the tube to operate at low plate current; it is not necessary to work the oscillator very hard, since the excitation requirements of the first doubler are rather low.

The 14- and 28-Mc. doubler circuits are identical except for the cathode resistor, R_2, in the first doubler stage. The second doubler uses no cathode bias, because as much output as possible is desirable to drive the 56-Mc. doubler. Parallel plate feed is used in both stages.

The 56-Mc. doubler has series plate feed through an untuned plate coil. Since the coupling to the final grid circuit is fairly loose, the coil is made nearly self-resonant so that maximum energy transfer will occur. The push-pull amplifier circuit is the standard arrangement for neutralized triodes.

Fixed or cathode bias is not required in the last three stages, either for operating or pro-

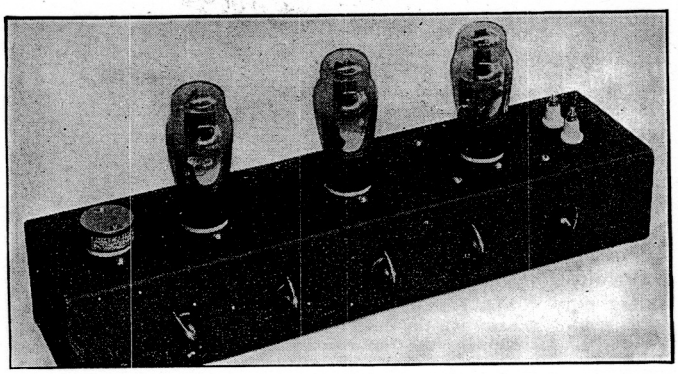

Fig. 1501 — In this front view of the 10-watt 56-Mc. transmitter the oscillator, doubler and amplifier tubes are from left to right. The crystal socket is at the left end of the chassis and the output terminals are at the right. The tuning controls are arranged in line along the front wall of the chassis.

tective purposes. The plate currents of the 6A6s will not be excessive in the event that excitation fails or is purposely shut off. This is a convenience where the oscillator is to be keyed for c.w. work.

Meter switching with shunt resistors (R_7 to R_{12}, inclusive) provides for measuring the plate current in each stage, although the meter is not incorporated in the transmitter itself.

The transmitter is built on a chassis measuring 3 × 4 × 17 inches. One tube is located at the exact center of the top and the other two are 4⅛ inches to the right and left, respectively. It is advisable to mount the oscillator and doubler tube sockets with the filament prongs toward the front of the chassis and the amplifier tube socket with its filament prongs facing the right end. This arrangement serves to keep the r.f. wiring simple and straightforward. The crystal socket and output terminals each are centered 1¾ inches in from the ends of the chassis. The second-doubler tuning condenser, C_3, is mounted in the center of the front wall of the chassis. The other variable condensers are located to the left and right, with ±2-inch spacing between shaft centers. C_1, C_2 and C_3 are supported by the chassis wall, but C_4 and C_5 are mounted on small metal pillars from the upper side of the chassis. This mounting arrangement brings the shafts of C_4 and C_5 in line with the other three.

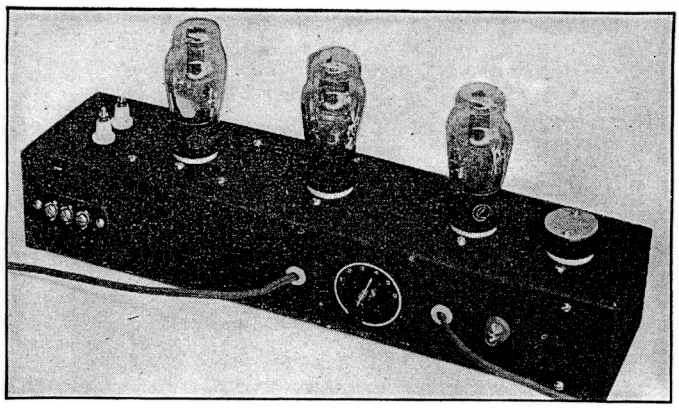

Fig. 1502 — The plate-voltage terminals are at the left in this rear-view photograph of the 10-watt 56-Mc. transmitter. The meter switch near the center is flanked by the meter cord on the left and the 115-volt line cord on the right. The crystal-current bulb is mounted in a rubber grommet.

Fig. 1502 shows the placement of parts on the rear wall of the chassis. Wiring to the meter switch is simplified if the switch is located 6½

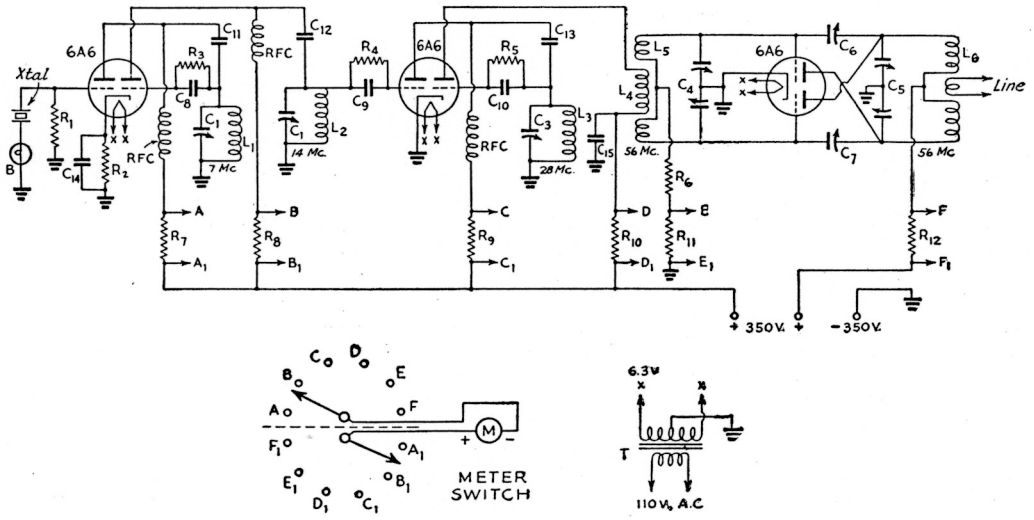

Fig. 1503 — Wiring diagram of the 10-watt 6A6 dual triode crystal-controlled 56-Mc. transmitter-exciter unit:

C_1 — 50-μμfd. variable (Hammarlund HF-50).
C_2 — 35-μμfd. variable (Hammarlund HF-35).
C_3 — 15-μμfd. variable (Hammarlund HF-15).
C_4 — 50-μμfd. per section dual variable (Hammarlund HFD-50).
C_5 — 15-μμfd. per section dual variable (Hammarlund HFD-15-X).
C_6, C_7 — 3–30-μμfd. mica trimmer (National M-30).
C_8, C_9, C_{10} — 100-μμfd. midget mica.
C_{11}, C_{12}, C_{13}, C_{14}, C_{15} — 500-μμfd. midget mica.
R_1 — 15,000 ohms, ½-watt.
R_2 — 500 ohms, 1-watt.
R_3, R_4, R_5 — 30,000 ohms, ½-watt.
R_6 — 1000 ohms, 1-watt.
R_7, R_8, R_9, R_{10}, R_{11}, R_{12} — 25 ohms, ½-watt.
RFC — 2.5-mh. r.f. choke (National R-100).
B — 60-ma. pilot bulb.
Sw — Two-circuit 6-position selector switch (Mallory 3226-J).
T — 6.3-volt filament transformer (Thordarson T-19F81).
L_1 — 21 turns No. 22 d.s.c., close wound, 1-inch diameter.
L_2 — 11 turns No. 22 d.s.c., 1 inch long, 1-inch diameter.
L_3 — 6 turns No. 14, ¾ inch long, 1-inch diameter.
L_4 — 9 turns No. 14, ⅝ inch long, ¾-inch diameter.
L_5 — 2 turns No. 12 each side of L_4, 1-inch diameter, center opening ¾ inch. Turns spaced diameter of wire.
L_6 — 3 turns No. 12 each side of coupling link, ⅞-inch diameter, center opening ¾ inch. Turns spaced diameter of wire.
Link — 5 turns No. 12, ⅞-inch diameter, ½ inch long.

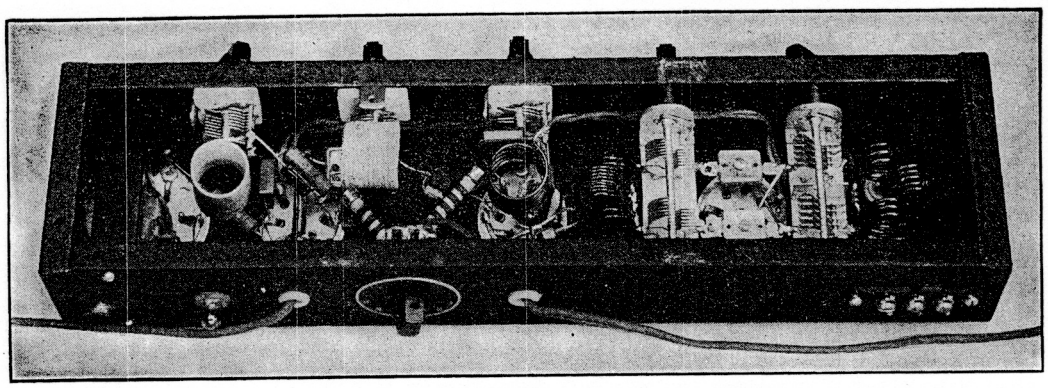

Fig. 1504 — This bottom view shows how the tuning condensers are mounted with respect to the tube sockets. The self-supporting coils mount directly on the tuning condensers. Filament transformer is in lower left-hand corner.

inches in from the right-hand end, looking at the rear, where there is a comparatively open spot in the r.f. layout. This point is also convenient to the supply ends of the plate chokes for the first three stages, so that these chokes can be mounted directly on the switch points. The shunt resistors should be soldered to the switch contacts before the switch is installed.

The filament transformer and crystal lamp are at the left end of the chassis, in the bottom view. The transformer should be kept as far as possible to the left so that it will not be near the r.f. circuits. The lamp is held firmly in the grommet by stiff leads soldered to its base. The plate-supply terminals are out of the way at the extreme left end of the base. Two positive terminals are provided, so that a modulator transformer secondary may be connected in the plate lead of the final amplifier.

The rest of the parts are mounted so that r.f. leads will be short and direct; short leads are particularly important in the last two or three stages. The grid connections in the amplifier should be made directly between the grid prongs of the socket and the stator plate terminals of the grid tank condenser, which should be directly above the grid prongs if the unit is laid out as recommended. The plate prongs and the stator sections of C_5 should be cross-connected so that the neutralizing condensers, C_6 and C_7, may be supported by the condenser lugs, as shown in Fig. 1504. This gives leads of negligible length and perfect symmetry, both of which contribute to good neutralizing. The trimmer-type condensers used for neutralizing are a departure from usual practice. However, since the neutralizing capacity required is small the actual dielectric is mostly air, the effect of the mica is inconsequential, and the small physical size of the condensers make them ideally suited for the purpose. The output coupling coil has its ends soldered to lugs which are held in place by the feed-through terminals. The lugs will bend as the position of the coil is varied to change the coupling.

A power supply delivering 350 volts at 150 ma. is needed. Circuit performance is similar to that to be expected at the lower frequencies; each tank circuit will be in resonance when adjusted for minimum plate current to the tube with which it is associated. The current values should be 10, 18, 18 and 40 ma., in the order listed, for the first four stages. It is quite possible that the values will vary slightly in different layouts, but they should be approximately as given. Tuning of the various tanks should be adjusted to obtain maximum output from the 56-Mc. doubler, as indicated by maximum grid current in the final-amplifier grid leak, R_6. If no grid current is obtained, it is probably an indication that the coupling between L_4 and L_5 is either too tight or too loose; this coupling is quite critical, and therefore deserves careful adjustment. The amplifier grid current should be 25 ma. or more when the coupling is optimum. Each time the coupling is changed, the grid condenser, C_4, as well as the preceding tuning condensers should be readjusted.

After a grid-current indication is obtained, the amplifier should be neutralized. Plate voltage must be removed from the final amplifier but the rest of the circuits should be in normal operating condition. Start with the plates of the neutralizing condensers screwed up tight and then back off a full three turns on each condenser. This places the neutralizing capacities at approximately the correct values. Condenser C_5 is then rotated through

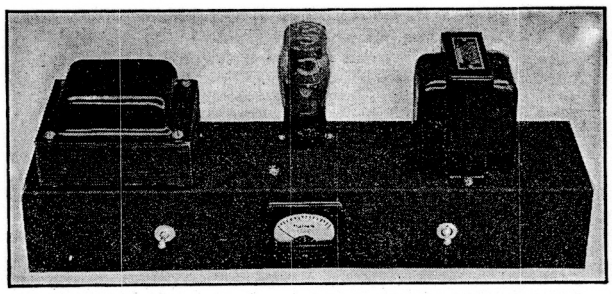

Fig. 1505 — The power-supply chassis also houses the milliammeter for all plate-current measurements in the 56-Mc. transmitter.

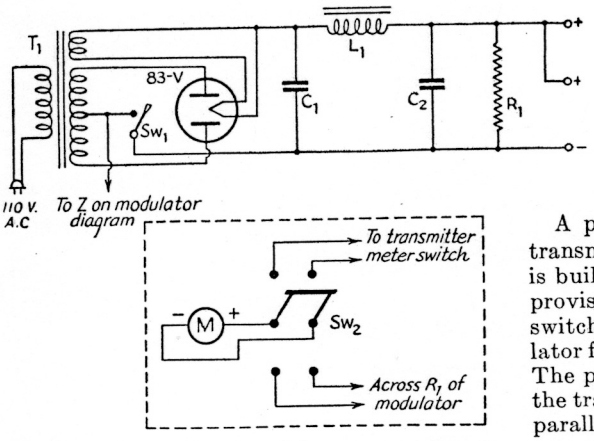

Fig. 1506 — Wiring diagram of the power-supply unit.

C_1, C_2 — 8-μfd. 450-volt electrolytic.
R_1 — 25,000 ohms, 25-watt wire-wound.
Sw_1 — S.p.s.t. toggle switch (see text).
Sw_2 — D.p.d.t. toggle switch.
M — 0–150 ma. d.c. milliammeter.
T_1 — Power transformer, 375-0-375 volts, 180 ma.; 5 volts 3 amperes (Thordarson T-13R09).
L_1 — Filter choke, 5 henrys, 200 ma., 80 ohms (Thordarson T-67C49).

resonance, which will be indicated by a kick in the grid current. Adjust the neutralizing condensers in small steps, turning both screws in the same direction and the same amount each time, until the grid current remains stationary when C_5 is rotated. This indicates complete neutralization. Retune the grid circuit after neutralization, so that maximum excitation will be secured. It is also a good idea to recheck the coupling between L_4 and L_5, as described above, since neutralization will change the load on the driver somewhat.

Plate voltage may now be applied to the amplifier. When the plate tank is tuned to resonance, the plate current should fall to 20 or 25 ma. A load, such as an antenna or feeder system or a 10-watt lamp used as a dummy antenna, should be connected and the coupling adjusted until the plate current reaches the full-load value of 60 ma. The grid current will fall off to 10 ma. or so when the amplifier is loaded.

The transmitter output may be fed into any type of antenna, if an appropriate matching or tuning system is used. A system employing a two-wire non-resonant line may be coupled directly to the output coil without tuning.

At the recommended input of 21 watts (60 ma. at 350 volts), the output as measured in a dummy antenna is something over 10 watts. To modulate the transmitter 100 per cent, an audio power output from the modulator of about 11 watts is required. The modulator output transformer must match an impedance of 5833 ohms (modulated-amplifier plate voltage divided by modulated-amplifier plate current expressed in amperes). A 6000-ohm output winding will be close enough to provide a satisfactory match. A modulator using a Class-B 6A6 makes an excellent companion unit for the transmitter, because it maintains the uniformity of tube types. Such a unit is described in Chapter Thirteen.

A power supply capable of supplying this transmitter is shown in Figs. 1505 and 1506. It is built on a 3 × 4 × 17-inch chassis and has provision for mounting a meter which can be switched to either the transmitter or the modulator for checking the respective plate currents. The plate switch, Sw_1, is used to turn on both the transmitter and the modulator, since it is in parallel with the switch on the modulator power supply. (*Bib.* 1.)

A 12-Watt 56-Mc. Transmitter

The transmitter shown in Figs. 1507, 1508, 1509 and 1510 is designed to work from a power supply delivering 125 ma. at 325 volts. Since there are vibrator-type packs available which deliver this output, it is quite suitable for installation in a car for mobile work. To achieve maximum economy in the exciter and audio stages, high-gain doubler tubes and Class-B audio modulation are used.

From the diagram in Fig. 1508 it may be seen that a 6AG7 Tri-tet oscillator using a 7-Mc. crystal quadruples frequency to drive a 6AG7 doubler to 56 Mc., and this latter tube drives a 6V6 amplifier on 56 Mc. A 6L6 could be substituted for the 6V6, but with no improvement in performance at 12 watts input. Provision for neutralizing the 6V6 is included in

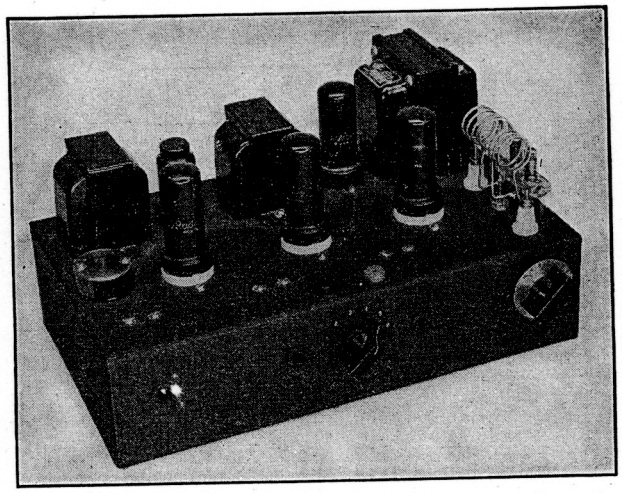

Fig. 1507 — A complete 12-watt 56-Mc. 'phone transmitter, ready for installation in either car or home. The tubes along the front, from left to right, are the 6AG7 Tri-tet oscillator, 6AG7 doubler and 6V6 final amplifier. The 6C5 driver (left) and the 6N7 Class-B modulator are at the rear between the transformers. The knob on the right controls the final tank condenser, C_4. The other tuning condensers are adjusted by screwdriver through the rubber grommets. The meter switch, Sw_1, is mounted at the front center, just under the meter pin jacks. The antenna coil is mounted on the binding-post strip. Coupling is adjusted by swinging the antenna coil.

the design of the unit, but it was found unnecessary with this particular parts arrangement. It is not to be assumed, however, that the 6V6 will work well without neutralization in every arrangement — the necessary neutralizing capacity is small, and is doubtless present in this layout as a stray capacity. The grid of the 6V6 is tapped down on the driver plate coil to lighten the loading and give a better match.

The modulation equipment consists of a 6C5 driver stage and a 6N7 Class-B modulator. Any arrangement except one using a single-button microphone would require more audio gain and hence increase the possibility of "hash" pick-up in mobile operation.

The transmitter is built on a 7 × 12 × 3-inch chassis, thus providing plenty of room for the parts. Reference to Figs. 1507 and 1509 will show the placement of parts, but some of the minor constructional points should be pointed out. The tuning condensers, C_1, C_2 and C_3, are mounted on the underside of the chassis on the small brackets with which they are furnished. They are set far enough back from the front so that the ends of the shafts do not quite touch the metal, and are screwdriver adjusted. Rubber grommets in the chassis holes prevent shorting the condenser shafts to chassis through the metal shaft of the screwdriver. The final tank condenser, C_4, is supported on the panel.

All of the inductances are mounted on or near their respective tuning condensers, except for the final tank coil, L_4, which is mounted above the chassis on feed-through insulators. This arrangement makes it more convenient to adjust the antenna coupling coil, L_5, after installing the transmitter in the car.

The plate circuits and the final grid circuit can be metered by plugging the meter leads into the two pin jacks on the front center of the chassis and setting the meter switch to the proper position. This is a convenience when tuning up with a different crystal or antenna. The power leads are terminated at a four-prong plug mounted on the back of the chassis.

One problem in connection with mobile units is the voltage drop in the line from the battery to the vibrator or motor-generator unit, and these leads must be kept as short as possible. This transmitter is intended to be installed in the trunk rack of the car, with the control box mounted on the dashboard of the car and the

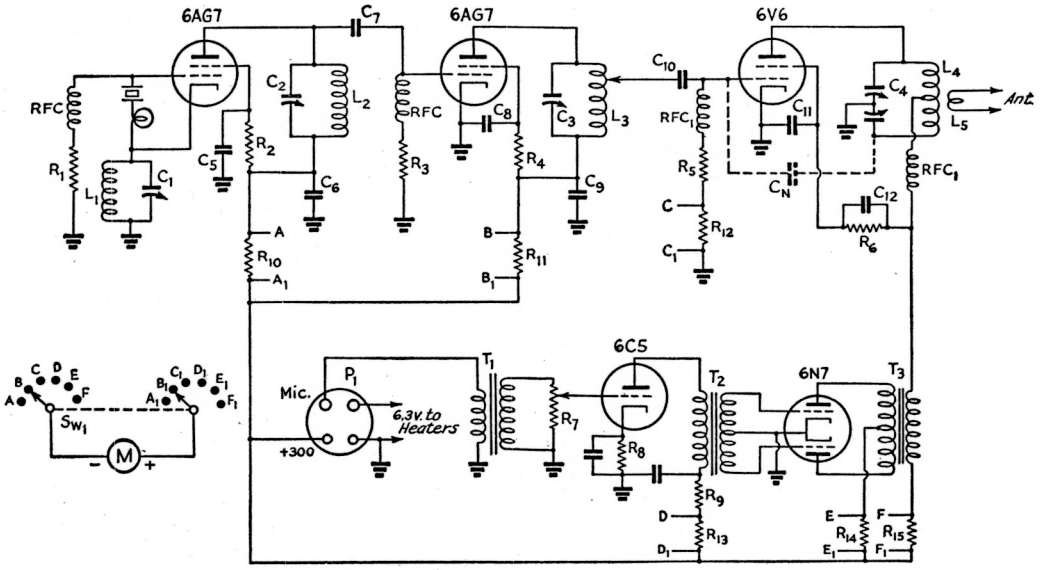

Fig. 1508 — Wiring diagram of the 12-watt 56-Mc. 'phone transmitter for mobile or fixed station operation.

C_1 — 50-$\mu\mu$fd. variable (National UM-50).
C_2, C_3 — 25-$\mu\mu$fd. variable (National UMA-25).
C_4 — 30-$\mu\mu$fd. per section variable (Hammarlund HFD-30-X).
C_5, C_8 — 0.01-μfd. 400-volt paper.
C_6, C_9, C_{11} — 0.002-μfd. mica.
C_7, C_{10} — 250-$\mu\mu$fd. mica.
C_{12}, C_{14} — 8-μfd. 450-volt electrolytic.
C_{13} — 25-μfd. 25-volt electrolytic.
C_N — See text.
R_1, R_3 — 0.2 megohm, 1-watt.
R_2, R_4 — 40,000 ohms, 1-watt.
R_5 — 3000 ohms, 1-watt.
R_6 — 5000 ohms, 2-watt.
R_7 — 0.1-megohm volume control.
R_8 — 1000 ohms, ½-watt.
R_9 — 6000 ohms, 1-watt.
R_{10}–R_{15} — 25 ohms, ½-watt.
RFC — 2.5-mh. r.f. choke (National R-100U).
RFC_1 — V.h.f. choke (Ohmite Z-1).
Sw_1 — 2-circuit, 5-position rotary switch, non-shorting (Mallory 3226J).
T_1 — Microphone transformer (Stancor A-4726).
T_2 — Driver transformer (Stancor A-4721).
T_3 — Modulation transformer (Stancor A-3845).
L_1 — 19 turns No. 18 enam., spaced slightly to occupy ⅜-inch winding length, on ⅜-inch diameter form (National PRF-2).
L_2 — 8 turns No. 14, spaced to occupy 1⅞ inches, ⅞-inch diameter, self-supporting.
L_3 — 3½ turns No. 14, spaced to occupy ⅞ inch, ⅞-inch diameter, self-supporting. The 6V6 grid tap is 1 turn from the plate end.
L_4 — 3 turns No. 14, each side of center, spaced to occupy ¾ inch, ⅞-inch diameter.
L_5 — 2 turns, No. 14, ⅞-inch diameter.
P_1 — 4-prong base-mounting plug (Amphenol RCP-4).
The lamp in series with the crystal is a 60-ma. dial light.

vibrator pack mounted under the hood on the fire wall. This applies when the battery is under the hood of the car; for cars with the battery elsewhere, the vibrator pack and control box might have to be mounted differently. The drop in the leads running to the heaters of the tubes from the battery will be small if heavy wire is used, and the drop in the 325-volt line from the vibrator pack is negligible.

The wiring diagram of the control box is shown in Fig. 1510. As may be seen, the microphone battery is mounted in this box and a jack is provided for the microphone. Switch Sw_1 turns on the vibrator pack and the heaters of the tubes. Switch Sw_2 is used as an "on-off" switch for the transmitter, controlling the microphone battery and the plate-supply lead. The control box is only 4 × 4 × 2 inches. (Parmetal MC-442), and takes up little room.

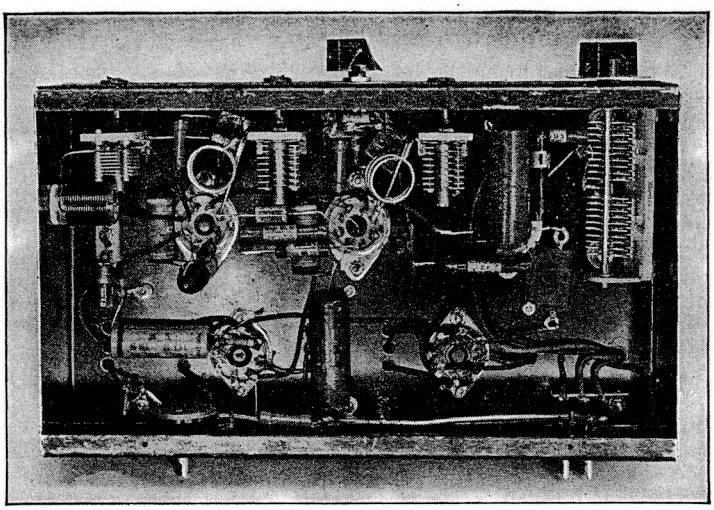

Fig. 1509 — A view under the chassis of the 56-Mc. transmitter shows the straight-forward arrangement of parts. The coils, L_2 and L_3, are self-supporting and are mounted on their respective condensers. The audio volume control and the power-supply plug are mounted at the rear of the chassis. The lead from the plug to the microphone transformer is run through grounded shield braid.

An alternative system is to mount the vibrator pack and an additional storage battery in the trunk rack, and to control both the "on-off" of the heaters and vibrator pack and of the plate power through suitable relays controlled from the dash. However, the storage battery then must be removed from the car for recharging, and thus the installation may not always be available when needed.

Adjustment of the transmitter is conventional in every way. With 325 volts from the power supply, the total plate and screen currents of the 6AG7 Tri-tet and the 6AG7 doubler will be 12 and 16 ma. respectively, and the final grid current should be about 2 ma. If, when the voltage is removed from the screen and plate of the 6V6 final, there is no flicker in the grid current as the final tank is tuned through resonance, there is no need to worry about neutralizing the final amplifier. However, if a flicker (0.1 ma. or so) does show up, a neutralizing capacity, *Cn*, can be introduced by running a stiff wire from the free end of the final tank to a point near the grid terminal on the 6V6 socket (shown by dotted lines in Fig. 1508). The stage is then neutralized in the usual manner, varying the neutralizing capacity by moving the free end of the wire.

With voltage applied to the screen and plate of the 6V6 and the output tank circuit tuned to resonance, the total plate and screen current should be under 35 ma. unloaded and about 39 or 40 ma. loaded. In the audio section, the 6C5 plate current will be about 8 ma. and the no-signal 6N7 plate current around 35 ma., kicking up to about 50 ma. on peaks.

The antenna for mobile work may be from 0.25 to 0.6 wavelength long. Since the transmitter can be mounted close to the end of the antenna, there is no particular problem in feeding it aside from finding a suitable insulator to run through the side of the car. If an antenna near a quarter wavelength long is used, one side of the antenna coil, L_5, should be grounded to the car and a variable condenser connected in series with the antenna and the other side of L_5. When the antenna is nearer a half wavelength long, parallel tuning of L_5 should be used. Regardless of the length of antenna, the antenna coupling is varied by movement of L_5 with respect to L_4 after tuning both amplifier and tank circuit to resonance. (*Bib.* 2.)

Fig. 1510 — Circuit diagram of a control box for the 56-Mc. transmitter.
J — Small microphone jack (Mallory 702B).
Sw_1 — D.p.s.t. high-current toggle switch, sections in parallel.
Sw_2 — D.p.s.t. toggle switch.
P_2 — 4-prong cable socket (Amphenol PF-4).
P_3 — 6-prong cable plug (Amphenol RCP-6).
P_4 — 6-prong socket (Amphenol PF-6).
Microphone battery is a Burgess 3A2.
Microphone lead in cable is shielded throughout.

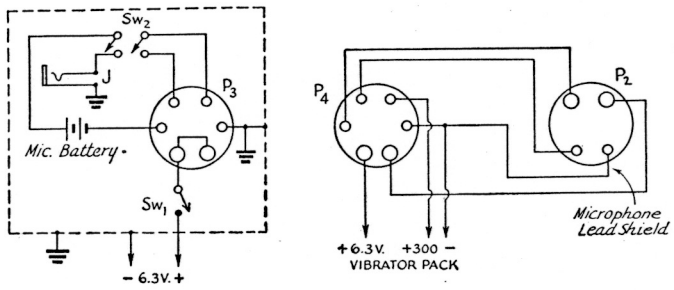

¶ A Three-Band 815 Transmitter

The 815 dual beam-power tube is useful in v.h.f. applications. Figs. 1511, 1512, 1513 and 1514 show a transmitter using this tube in the output stage on 28, 56 and 112 Mc.

The 815 can be used on the lower frequencies without neutralization, but in the v.h.f. range above 28 Mc. the high gain of the tube plus its grid-plate capacity of 0.2 $\mu\mu$fd. will make neutralization necessary except when the grid circuit is heavily loaded. However, neutralization is simple and enables the amplifier to be modulated 100 per cent with no indication of regeneration and with no fixed bias necessary.

As may be seen in Fig. 1511, a 7N7 (loktal 6SNTGT) dual triode is used as the oscillator and first doubler, is followed by a 7C5 (loktal 6V6) second doubler which drives the 815 as a neutralized amplifier on the three bands. With the arrangement as shown, a 7-Mc. crystal is used for 28-Mc. operation, a 14-Mc. crystal for 56-Mc. operation, and a 28-Mc. crystal for 112-Mc. operation. If 7-Mc. crystals only are to be used, additional doubler stages will be necessary.

The final tank circuit is the usual coil-and-condenser combination for 28- and 56-Mc. operation, but a parallel-line tank is used on 112 Mc. The tuning condenser used on the lower frequencies is mounted on a metal bracket which plugs into the chassis, thus making it possible to remove this assembly and plug in the parallel lines used on the highest frequency. The parallel-line circuit is tuned by adjusting a sliding jumper, and the antenna line is tapped onto the tank line through small fixed condensers. While a coil and condenser circuit could be used with fair efficiency at 112 Mc., the parallel-line tank has lower losses and consequently gives higher output.

The 815 is readily neutralized by using small tabs of copper, supported on stiff wires, close to the plates of the tube. The plate in the tube acts as the other half of the neutralizing condenser, and the combination gives about the shortest leads possible. This construction adds no expense to the unit except for the two small ceramic bushings (Millen 32150) through which the wires are run. Neutralizing consists simply of moving the copper tabs with respect

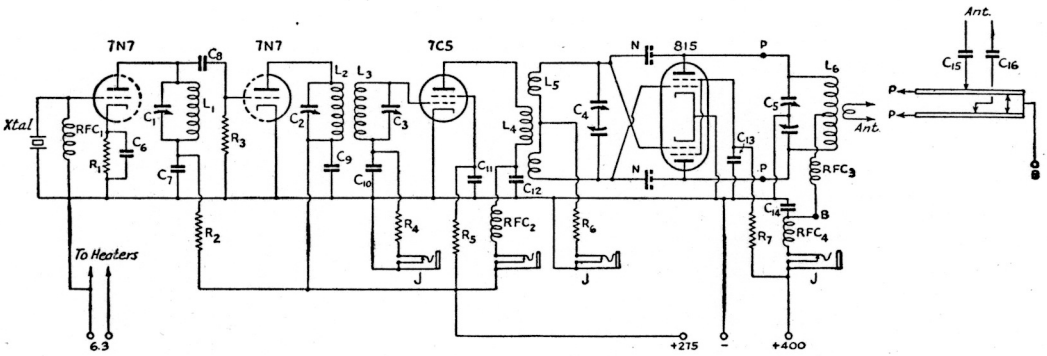

Fig. 1511 — Circuit diagram of the dual beam-power 815-tube three-band 28-, 56- and 112-Mc. v.h.f. transmitter.

C_1, C_2 — 75-$\mu\mu$fd. midget variable (Cardwell ZU-75-AS).
C_3 — 25-$\mu\mu$fd. midget variable (Cardwell ZR-25-AS).
C_4 — 15-$\mu\mu$fd. per section dual midget variable (Cardwell ER-15-AD).
C_5 — 15-$\mu\mu$fd. per section dual midget variable, 0.7-inch spacing, modified (see text). (Cardwell ET-15-AD.)
C_6, C_7, C_9, C_{10}, C_{11} — 0.005-$\mu\mu$fd. midget mica.
C_8 — 100-$\mu\mu$fd. midget mica.
C_{12} — 250-$\mu\mu$fd. midget mica.
C_{13}, C_{15}, C_{16} — 0.001-μfd. mica.
C_{14} — 0.001-μfd. mica, 2500-volt rating.
N — Small copper tabs, ½ × ¾-inch. See text.
R_1 — 300 ohms, 1-watt.
R_2 — 5000 ohms, 10-watt wirewound.
R_3 — 50,000 ohms, 1-watt.
R_4 — 75,000 ohms, 1-watt.
R_5 — 12,000 ohms, 1-watt.
R_6 — 15,000 ohms, 1-watt.
R_7 — 15,000 ohms, 10-watt wirewound.
RFC_1 — 2.5-mh. r.f. choke (National R-100).
RFC_2, RFC_3, RFC_4 — V.h.f. r.f. choke (Ohmite Z-1).
J — Closed-circuit jack.

L_1 — 7-Mc. crystal: 18 turns No. 22 d.c.c. close-wound.
14-Mc. crystal: 7 turns No. 22 d.c.c. close-wound.
28-Mc. crystal: 4 turns No. 18 e., spaced to occupy ⅝ inch.
All wound on 1-inch diameter plug-in forms (National XR-1).

L_2 — 14 Mc.: 8 turns No. 22 d.c.c. close-wound on 1¼-inch diameter form.
28 Mc.: 5 turns No. 14 e., spaced to occupy ½ inch, self-supporting, 1-inch diameter.
56 Mc.: 4 turns No. 14 e., spaced to occupy ½ inch, self-supporting, ¾-inch diameter.

L_3 — 14 Mc.: 9 turns No. 22 d.c.c. close-wound ⅝-inch from L_2. (Wound on Millen 43001 form.)
28 Mc.: 7 turns No. 14 e. spaced to occupy 1 inch, self-supporting, 1-inch diameter.
56 Mc.: Same as L_2.

L_4 — 28 Mc.: 9 turns No. 14 e., spaced to occupy 1 inch, self-supporting, 1-inch diameter.
56 Mc.: 5 turns No. 14 e., spaced to occupy ⅞ inch, self-supporting, 1-inch diameter.
112 Mc.: 3 turns No. 12, spaced diameter of wire, self-supporting, ⅝-inch diameter.

L_5 — 28 Mc.: 5 turns No. 14 e. each side of L_4, self-supporting, same diameter and spaced to occupy ½ inch.
56 Mc.: 3 turns No. 14 e. each side of L_4, self-supporting, same diameter and spaced to occupy ¾ inch.
112 Mc.: 1 turn No. 14 each side of L_4, same diameter.

L_6 — 28 Mc.: 10 turns No. 12, spaced wire diameter, self-supporting, split in center for ¾ inch for coupling link 1¾-inch diameter.
56 Mc.: 4 turns No. 12 spaced twice wire diameter, self-supporting, split in center for ½ inch for coupling link, 1¾-inch diameter.
112 Mc.: 17 inches ¼-inch copper tubing, spaced ¼ inch.

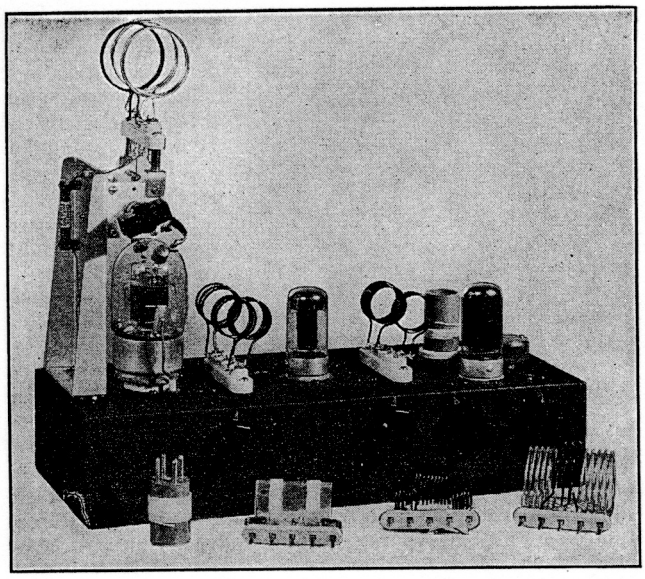

Fig. 1512 — The 815 transmitter with 56-Mc. coils in place. The 815 amplifier is at left, 7C5 driver in center, and 7N7 oscillator-doubler at right. Panel controls are, left to right, final grid, second doubler grid, first doubler plate and oscillator plate. Coils in front are used on 28 Mc.

to the tube plates until the stage is neutralized, as indicated by no reaction on the grid current when the plate circuit is tuned through resonance (with plate and screen voltage off).

Jacks are provided for metering grid and plate current in the driver and final stages.

The transmitter is built on a 6 × 14 × 3-inch chassis. Reference to Figs. 1512, 1513 and 1514 will show how the various components are arranged. The tuning condensers on the chassis are mounted on the small brackets available for the Cardwell Trim-Air condensers. Low-loss bakelite loktal sockets are used for the exciter portion, and a ceramic octal socket is used for the 815. The oscillator coil, L_1, plugs into a four-prong ceramic socket, and Millen 41205 sockets, mounted above the chassis, are provided for coils L_2L_3 and L_4L_5.

The final tank condenser, C_5, is mounted on a bracket of aluminum so formed as to support the condenser just over the top of the 815. Two copper straps, wrapped around the center of the rotor and fastened to the end-plate spacer bars, provide a central rotor contact to keep the final tank circuit perfectly symmetrical. A Millen 40205 plug fastened to the bottom of the aluminum bracket holds the assembly in place and provides a connection for the d.c. plate voltage as well as a ground connection for the bracket. The 112-Mc. parallel-line tank similarly is mounted on a 40205 plug.

The heater current and low-voltage plate current are introduced at the rear of the set through a four-prong plug, while the high voltage plus modulation is introduced through a separate safety terminal. The two grid-current jacks are mounted directly on the rear of the chassis and the two plate-current jacks are mounted on a strip of bakelite supported well away from the chassis by brass pillars for safety and for better insulation than would be provided by fibre washers.

The adjustment of the coils is similar to that in any other transmitter, with a few minor modifications. If the oscillator plate coil, L_1, is wound as specified, the crystals should oscillate with condenser C_1 about half meshed. Coils L_2 and L_3 are next wound and plugged in, and a 0–10 milliammeter is connected in the grid circuit of the 7C5. With the crystal oscillating (as indicated by a neon bulb touched to the "hot" end of L_1, or by monitoring the signal in a receiver), C_2 and C_3 should be tuned for maximum grid current to the 7C5. There will be some interlocking of the tuning of these two condensers if the coupling between L_2 and L_3 is too tight, and the two coils should be moved in relation to each other until practically "one-spot" tuning is obtained. The grid current to the 7C5 should be 1.5 to 2 ma. with 275 volts applied to the plate of the 7N7. Next, L_4 should be wound,

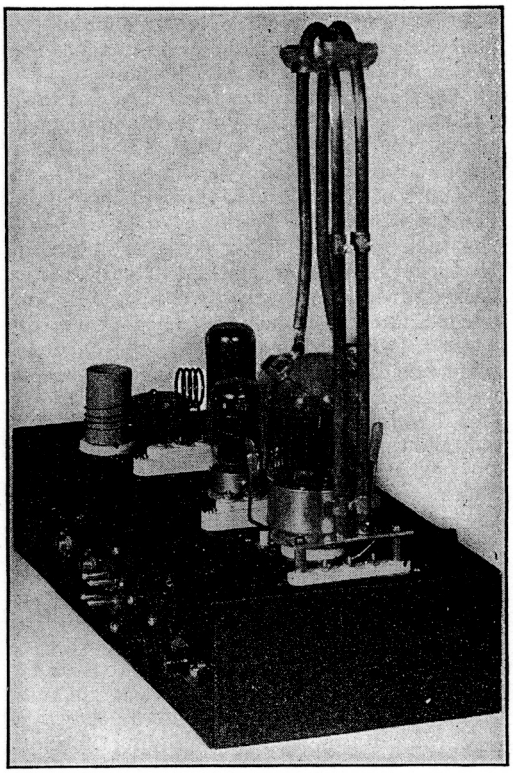

Fig. 1513 — Another view of the 815 transmitter with 112-Mc. coils and final tank in place. Note the small tabs alongside the 815 used for neutralizing. Meter jacks and power-supply terminals are at the rear of the chassis.

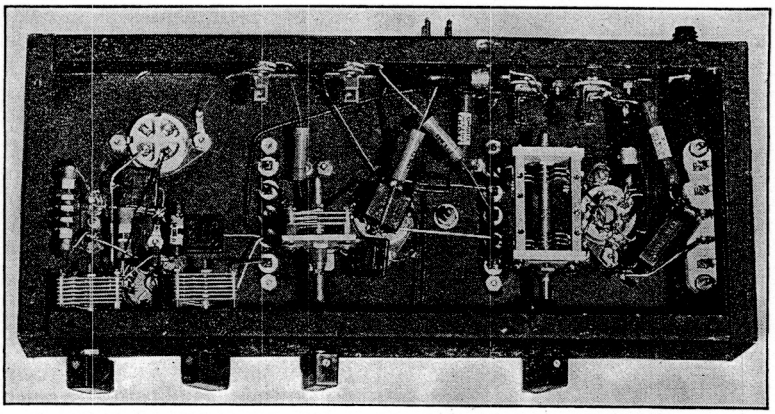

Fig. 1514 — A view underneath the chassis of the 815-tube transmitter. By-pass condenser leads are made as short as possible, and r.f. leads are made with heavy wire.

leaving off L_5 for the time being since L_4 is to be made self-resonant. If it is in resonance, as indicated by a neon bulb touched to the plate end, L_5 may be wound on; but if not, the turns should be pushed together or pulled apart until signs of r.f. can be seen. When L_5 is added the coupling should be made rather loose at first, since it will be found that there is more than enough drive available as indicated by the grid current to the 815. The coupling can be increased until the grid current is 6 or 7 ma. It will not normally be possible to obtain more than 4 to 5 ma. grid current to the 815 on 112 Mc., even with the coils tightly coupled, but this value is sufficient. The plate current of the 7C5 will be between 35 and 40 ma.

When grid current has been obtained in the 815 stage (with no plate or screen voltage applied), the tank circuit should be tuned to resonance as indicated by a sharp flicker of the grid current. The plates of the neutralizing condensers should then be moved with respect to the tube until no flicker remains, indicating that the tube is neutralized. Neutralization should always be checked when shifting from one band to another, since an accidental jarring of the tube or some unbalance in the stage may affect the adjustment. If the stage is correctly neutralized, it will be possible to apply several hundred volts (more might injure the tube) to the screen and plate and, with no bias, the excitation off and the plate tank unloaded, be able to detect no signs of r.f. anywhere in the circuit with any setting of the tank condenser. Unless the stage is neutralized, it will be impossible to modulate the amplifier fully without distortion.

When the amplifier has been neutralized, plate voltage may be applied with the excitation on and the amplifier loaded up to its rating of 150 ma. at 400 volts. About 30 watts of audio power will be required to modulate the stage.

The linear tank is tuned by sliding the shorting bar (two National metal-tube grid clips soldered together) up and down the bar until resonance is indicated. The bar has plate voltage on it, and all tuning should be carefully done with an insulated screwdriver. The antenna coupling is by means of two similar grid caps which can be moved up and down the lines until proper loading is obtained.

If f.m. is to be used on the 56- or 112-Mc. bands the frequency-modulated oscillator can be coupled in through several turns around L_1, with crystal removed from its socket. An f.m. oscillator is described in Figs. 1519, 1520 and 1521.

More than enough excitation is available on the 28- and 56-Mc. bands, but there is no advantage in running the grid current above 4 or 5 ma. since the output will not increase and the linearity of the amplifier is good with only 3 to 4 ma. grid current. The r.f. output of the transmitter could not be measured accurately above 28 Mc. (where it was close to 40 watts) but, with the lamp loads used, it appeared to be about 35 watts on 56 Mc. and 30 watts on 112 Mc., at the rated input of 60 watts.

A 275-volt and a 400-volt power supply are required for this transmitter. Figs. 1237 and 1215 show suitable power supplies, although the voltage from the supply of Fig. 1215 as shown will be too high, and a lower-voltage transformer should be substituted. A pair of 6L6s in Class AB_1 will furnish enough audio power to modulate fully the 815; such a modulator unit is shown in Fig. 1311. (*Bib.* 3.)

A 300-Watt 56-Mc. Amplifier

The 56-Mc. amplifier shown in Figs. 1515, 1516, 1517 and 1518 uses a pair of 35Ts or 35TGs running at 200 ma. with 1500 volts on the plates. With approximately 25 to 30 watts driving power, the efficiency and performance will be excellent. The 815 transmitter in Fig. 1511 is a suitable driver, although any transmitter of comparable output will serve.

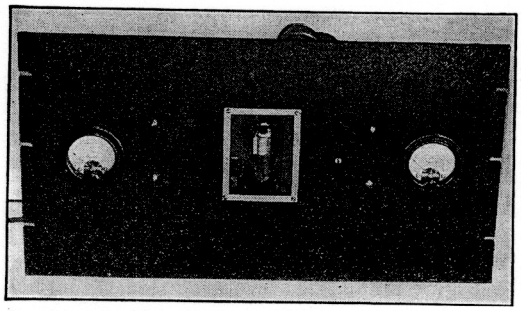

Fig. 1515 — The 300-watt 56-Mc. amplifier is built on a chassis which is supported by a Presdwood panel. The grid and plate tuning condensers are adjusted by an insulated screwdriver through holes in the panel.

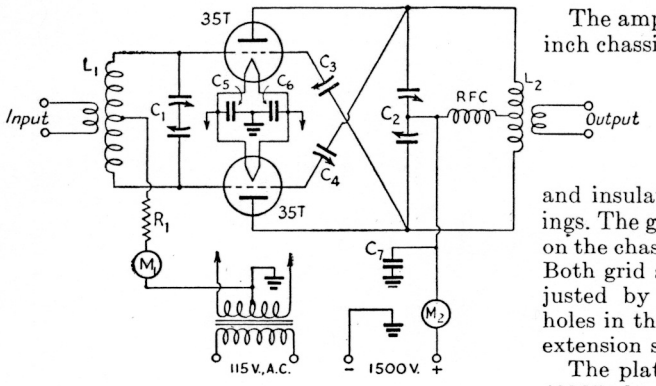

Fig. 1516 — Wiring diagram of the 300-watt amplifier.

C_1 — 25-$\mu\mu$fd. per section dual (Cardwell ER-25-AD).
C_2 — 35-$\mu\mu$fd. per section dual, rotor contacted at center (Millen 13035).
C_3, C_4 — Homemade neutralizing condensers (see text).
C_5, C_6 — 0.001-μfd. mica.
C_7 — 0.001-μfd. mica, 5000-volt rating.
R_1 — 2500 ohms, 10-watt.
L_1 — 6 turns No. 12, ¾-inch diameter, spaced to occupy ⅞ inch. Link is 2 turns No. 14, 1½-inch diameter.
L_2 — 4 turns No. 12, 1½-inch inside diameter, spaced diameter of wire with ¾-inch gap in middle to accommodate 3-turn swinging link of No. 14 wire.
M_1 — 0–100 or 0–150 milliammeter.
M_2 — 0–300 milliammeter.
T_1 — Filament transformer, 5 volts, 8 amperes (Thordarson T-19F84).

♦

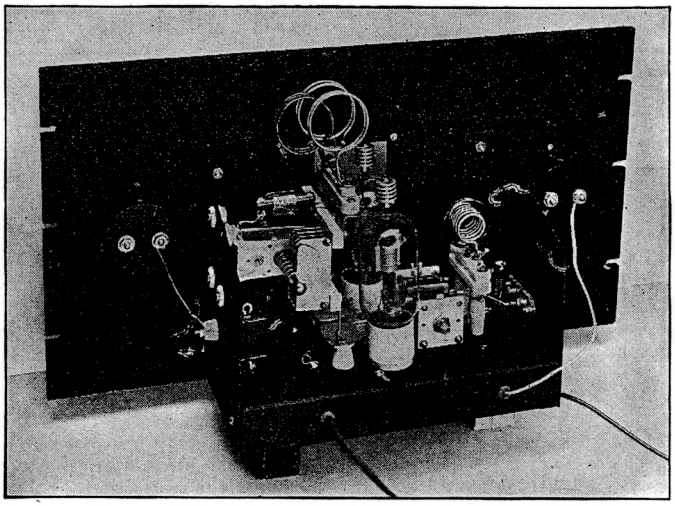

Fig. 1517 — A view behind the panel of the 300-watt amplifier shows the plate tuning condenser mounted on the panel bracket and gives a good idea of the construction of the neutralizing condensers. The plate coil socket is supported on the plate tuning condenser by two brass angles.

♦

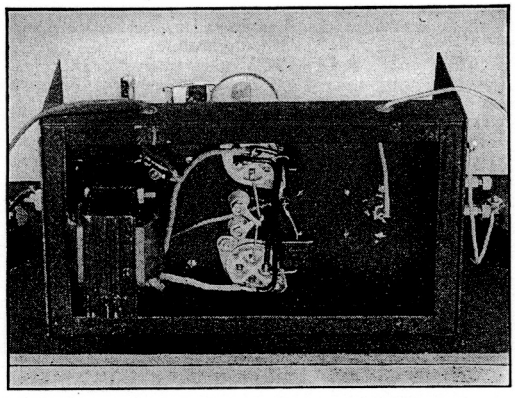

Fig. 1518 — The filament transformer is mounted underneath the chassis. Note how the leads from the neutralizing condensers to the grids of the tubes are crossed.

The amplifier is built on a 5½ × 9½ × 1½-inch chassis and is designed to be mounted on a panel of metal or Presdwood. Two panel brackets are used as supports, one at each end of the chassis. The plate tuning condenser, C_2, is mounted on one of these brackets and insulated from it by small steatite bushings. The grid tuning condenser, C_1, is mounted on the chassis and the rotor is left unconnected. Both grid and plate tuning condensers are adjusted by an insulated screwdriver through holes in the panel, although dials on insulated extension shafts could be used.

The plate tank coil is mounted on a Millen 40205 plug base, and the corresponding socket is supported on the tank condenser by two small brass angles. The grid coil is mounted on a National PB-16 plug, and its socket is raised above the chassis by small steatite stand-off insulators.

The neutralizing condensers are made from small tabs of aluminum with approximately one square inch of active area, supported about 3/16-inch apart on individual steatite pillars or bushings. If 35Ts are used, as shown in the photographs, the lower neutralizing condenser plates are mounted on through bushings running through the chassis to the grid terminals on the sockets. If 35TGs are used, it is not necessary to carry the grid leads through the chassis. In either event, the grid leads from the neutralizing condensers are crossed to provide the proper phasing for neutralization.

The chassis is fastened to the front panel by the brackets referred to above. The two meters are mounted on the panel outside of the brackets. A rectangular hole in the center of the panel allows the tubes to be observed during operation. A National 3 × 4-inch chart frame is used to outline the rectangular hole.

Leads for the excitation input are brought to binding posts mounted on the panel bracket at the grid end of the chassis. The output leads

are run to an antenna tuning unit from the terminals on the plate coil socket. If desired, the antenna tuning unit could be mounted directly above the amplifier, or it could be mounted on the wall at the point where the antenna leads come into the station.

If sufficient excitation is available, the grid current will be 55 ma. or more when the plate circuit is loaded to 200 ma. at 1500 volts. The amplifier can be loaded to 225 ma. or higher if the grid current does not drop below this value with the increased plate loading. The plates of the tubes will run a dull red under normal operation; if the two tubes do not show the same color, it indicates unbalance in the circuit. However, with the amplifier laid out as shown no trouble of this sort should occur.

At 300 watts plate input, approximately 150 watts of audio power will be required to modulate fully the output of the amplifier. A pair of HY40Zs is recommended for the modulator unit. A suitable power supply, delivering the necessary 200 ma. at 1500 volts, can be built along the lines of the supply described in Fig. 1246, substituting lower-current filter chokes and power transformer.

¶ An F.M. Modulator-Oscillator Unit

Where a crystal- or e.c.o.-controlled transmitter for the 28-, 56- or 112-Mc. band is available, it is a relatively easy matter to disconnect the regular plate modulator and substitute for the crystal or e.c.o. the f.m. oscillator-modulator shown in Figs. 1519, 1520 and 1521. The r.f. output of the unit is intended to be fed through a link to a tuned circuit which substitutes for the crystal in the crystal oscillator. This tuned circuit is resonant at the same fre-

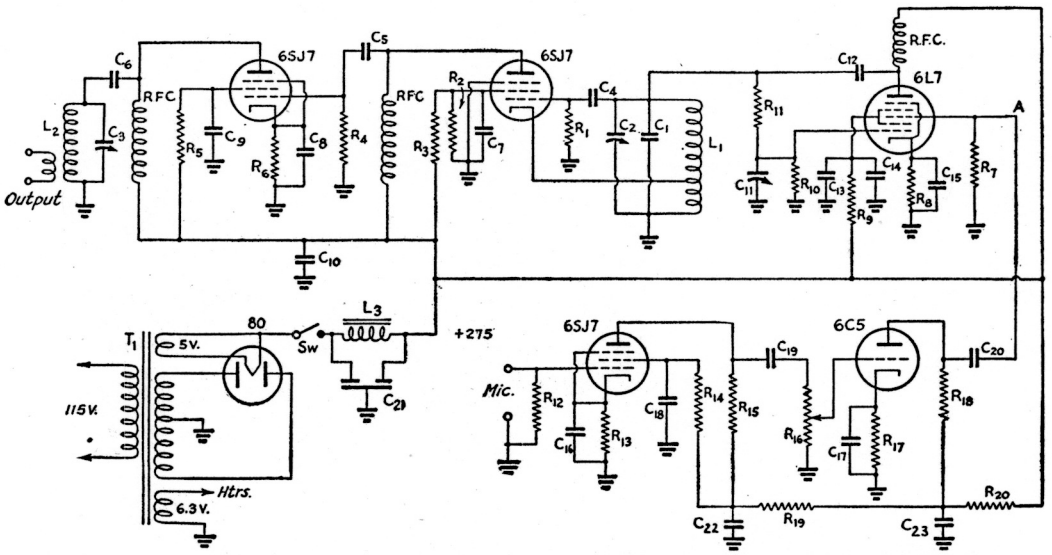

Fig. 1519 — Circuit diagram of the f.m. control unit for use with normally crystal-controlled v.h.f. transmitters.

C_1 — 150-$\mu\mu$fd. silvered mica for 7 Mc.; 650 $\mu\mu$fd. for 3.5 Mc.; 1150 $\mu\mu$fd. for 1.74 Mc.
C_2 — 100-$\mu\mu$fd. variable (National SE-100).
C_3 — 50-$\mu\mu$fd. variable (Hammarlund HF-50).
C_4 — 100-$\mu\mu$fd. mica.
C_5 — 250-$\mu\mu$fd. mica.
C_6 — 0-001-μfd. mica.
C_7, C_8, C_9, C_{10} — 0.01-μfd. paper.
C_{11} — 3-30-$\mu\mu$fd. compression trimmer (set full open).
C_{12} — 250-$\mu\mu$fd. mica.
C_{13} — 0.01-μfd. paper.
C_{14} — 8-μfd. 450-volt electrolytic.
C_{15} — 0.01-μfd. paper.
C_{16}, C_{17} — 10-μfd. 25-volt electrolytic.
C_{18} — 0.1-μfd. 200-volt paper.
C_{19}, C_{20} — 0.01-μfd. 400-volt paper.
C_{21} — Dual 450-volt 8-μfd. electrolytic.
C_{22}, C_{23} — 8-μfd. 450-volt electrolytic.
R_1 — 0.1 megohm, 1-watt.
R_2 — 25,000 ohms, 1-watt.
R_3, R_4, R_5 — 50,000 ohms, 1-watt.
R_6 — 300 ohms, ½-watt.
R_7 — 0.5 megohm, ½-watt.
R_8 — 300 ohms, ½-watt.
R_9 — 30,000 ohms, 1-watt.
R_{10} — 0.5 megohm, ½-watt.
R_{11} — 50,000 ohms, 1-watt.
R_{12} — 5 megohms, ½-watt.
R_{13} — 900 ohms, ½-watt.
R_{14} — 1 megohm, ½-watt.
R_{15} — 0.25 megohm, ½-watt.
R_{16} — 0.5-megohm volume control.
R_{17} — 2000 ohms, ½-watt.
R_{18} — 50,000 ohms, ½-watt.
R_{19} — 0.25 megohm, ½-watt.
R_{20} — 0.15 megohm, 1-watt.
RFC — 2.5-mh. r.f. choke.
L_1 — 7 Mc.: 10 turns No. 18 e., length ¾ inch, 1-inch diameter, tapped 3rd turn from ground.
3.5 Mc.: 11 turns No. 24 e., length ¾ inch, 1-inch diameter, tapped 4th turn from ground.
1.75 Mc.: 21 turns No. 24 e., length 1 inch, 1-inch diameter, tapped 6th turn from ground.
L_2 — 14 Mc.: 10 turns No. 18.
7 Mc.: 20 turns No. 18.
3.5 Mc.: 40 turns No. 24.
1.75 Mc.: 75 turns No. 26.
All coils wound with enameled wire on 1½-inch diameter forms (Hammarlund SWF-4). 1.75-Mc. coil close-wound; others spaced to a length of 1½ inches.
Link 3 to 5 turns (not critical).
L_3 — Filter choke, 10 henrys, 40 ma.
T_1 — 250-0-250 volts, 40 ma.; 6.3 volts at 2 amperes; 5 volts at 2 amperes. (Thordarson T-13R11).
Sw — S.p.s.t. toggle switch.

Note: Data for L_1 is subject to individual trimming for proper frequency coverage. Adjust inductance by changing turn spacing to bring low frequency end of band near maximum capacity on C_2. Coil specifications given apply to coil centered in round shield 2 inches in diameter and 2½ inches high. The 3.5- and 7-Mc. coils give full coverage of the 56–60-Mc. band with C_2 100 $\mu\mu$fd.; the 1.75-Mc. coil will cover approximately 57–60 Mc. with the same condenser.

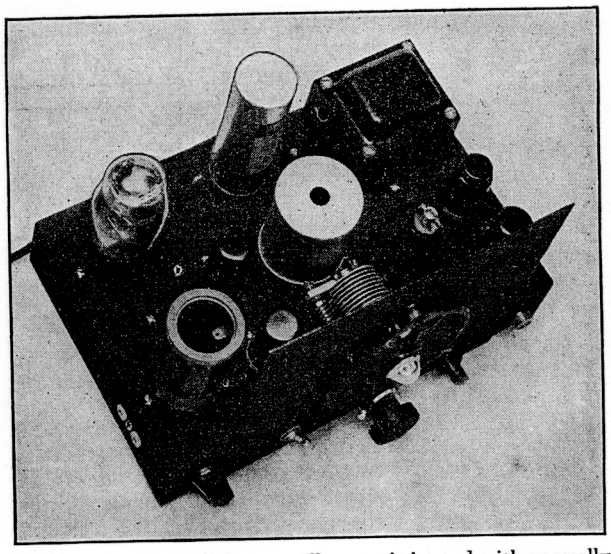

Fig. 1520 — This modulator-oscillator unit is used with normally crystal-controlled v.h.f. transmitters for frequency-modulated output. It contains a speech amplifier and power supply, so that no additional equipment is needed. The oscillator coil is in the round shield can in the center. The coil in the left foreground is the buffer output circuit. The speech amplifier and modulator are at the right, with the power supply along the rear. A 7 × 11-inch chassis is used.

quency as the output tank of the control unit, L_2C_3 in Fig. 1519, and is in fact identical with it in construction. In transmitters using triode or pentode crystal oscillators in which the tubes are not well screened, it is advisable to use the crystal oscillator tube as a doubler rather than as a straight amplifier. If the transmitter uses a 7-Mc. crystal oscillator, for example, the output of the unit may be on 3.5 Mc. and the grid circuit of the ex-crystal tube also tuned to 3.5 Mc. This will avoid difficulty with self-oscillation in the ex-crystal stage. With a pentode oscillator it is possible to work straight through, provided the grid tank substituted for the crystal is tuned well on the high-frequency side of resonance, but this procedure is not advisable since it may make the modulation non-linear. It is rather important that all circuits in the transmitter be tuned "on the nose" for best performance. Of course, if the crystal tube is a well-screened transmitting type it can be used as a straight amplifier.

With harmonic-type crystal oscillators the input frequency can be the same as that of the crystal, since the output frequency of the crystal tube is already a harmonic. In the Tri-tet oscillator, the cathode tank should be short-circuited; in the types using a cathode impedance to provide feed-back, this impedance also should be shorted. Care should be taken to avoid short-circuiting the grid bias, whether from a cathode resistor or grid leak. In the latter case this usually will mean that a blocking condenser (500 $\mu\mu$fd. or larger) should be connected between the "hot" end of the grid tank and the grid of the ex-crystal tube, with the grid lead (and choke) connected on the grid side of the condenser. Such a blocking condenser may be incorporated in the plug-in tank. The grid-tank tuning condenser may be a small air padder mounted in the coil form.

Where a suitable power supply and speech amplifier are already available, the lower part of Fig. 1519 can be omitted and only the oscillator, buffer and modulator units need be built. Transformer input to the modulator may be used where the available speech amplifier happens to have a low-impedance output circuit. The transformer and gain control connect between ground and point "A" of Fig. 1519, R_7 being omitted. Any of the conventional methods may be used to couple the modulator to an available speech amplifier, with one precaution — if a high-impedance connection is used, the "hot" lead should be shielded to prevent hum pick-up. (*Bib. 4.*)

If the transmitter to be used has a self-excited oscillator, electron-coupled or otherwise, a separate oscillator need not be built. The reactance modulator can be connected directly across the tank circuit of the oscillator. If the oscillator has too high a C/L ratio, not enough deviation may be obtained without distortion. It is advisable to use an L/C ratio in the oscillator comparable to those given in Fig. 1519.

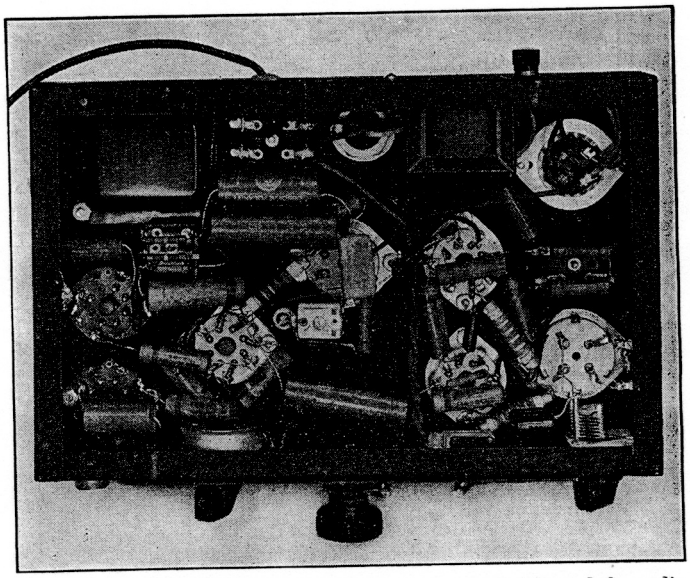

Fig. 1521 — In this bottom view, the r.f. section is at right and the audio at left. The oscillator socket is to the right of the coil socket in the center.

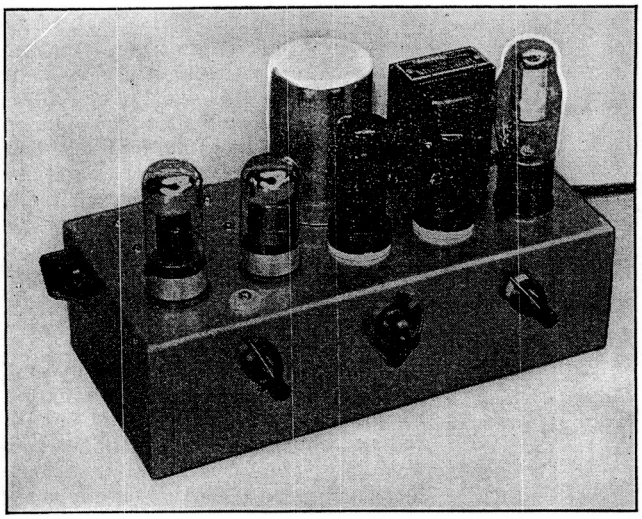

Fig. 1522 — The complete 56-Mc. f.m. transmitter has all r.f. components mounted under the chassis with the exception of the oscillator grid coil, which is housed in the shield can in the rear center of the chassis. The tubes, from left to right, are 7C5 output amplifier, 7G7 doubler, 6F6 e.c.o., 6SA7 reactance modulator and VR150-30 voltage regulator.

A Complete 56-Mc. F.M. Transmitter

The transmitter shown in Figs. 1522, 1523 and 1524 will yield a carrier of approximately 7 watts on 56 Mc., using a plate power supply delivering 300 volts. A reactance modulator is incorporated in the unit. If it is desired to use amplitude modulation, the gain control on the reactance modulator should be set at zero and the necessary 6 watts of audio connected in series to the plate and screen lead of the 7C5 output amplifier. Used as an f.m. transmitter, the entire unit requires 300 volts at about 90 ma., making it ideal to run from a vibrator pack for portable/mobile work.

A single-button carbon microphone is transformer-coupled to the 6SA7 reactance modulator, which is connected across the tank circuit of the 6F6 e.c.o. A VR150-30 stabilizes the voltage across the oscillator and modulator and aids materially in keeping the mean frequency constant. The grid circuit of the e.c.o. tunes from 14 to 15 Mc. with a slight margin at either end of the tuning range, and the plate circuit of the e.c.o. is tuned to 28 Mc. by means of a self-resonant coil which is adjusted for maximum output by squeezing the turns together or spreading them apart. Once adjusted, it need not be touched for any change in tuning conditions. The 28-Mc. output of the e.c.o. drives a 7G7/1232 doubler to 56 Mc., which in turn drives the output amplifier.

With a 300-volt supply, the 7C5 final-amplifier grid current should be about 0.6 ma. under load for linear amplitude modulation. If f.m. is used exclusively, the grid current can be lower with no harmful effect other than a slight de-

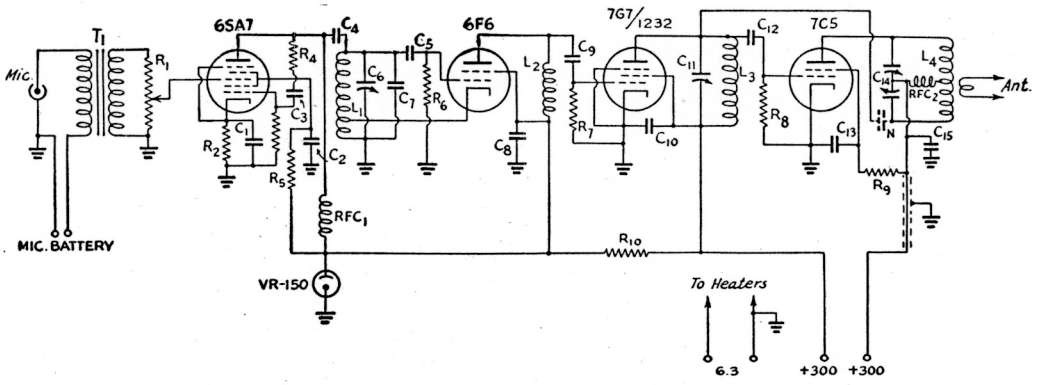

Fig. 1523 — Wiring diagram of the complete 56-Mc. 7-watt frequency-modulated transmitter.

C_1 — 0.01-μfd. 400-volt paper.
C_2 — 8-μfd. 450-volt electrolytic and 0.005-μfd. mica in parallel.
C_3 — 0.001-μfd. mica.
C_4 — 500-μμfd. mica.
C_5, C_9, C_{12} — 100-μμfd. mica.
C_6 — 15-μμfd. midget variable (Hammarlund HF-15).
C_7 — 25-μμfd. silvered mica.
C_8, C_{10}, C_{13} — 0.005-μfd. mica.
C_{11} — 35-μμfd. midget variable (Hammarlund HF-35).
C_{14} — 35-μμfd. per section dual variable (Cardwell ER-35-AD).
C_{15} — Two 500-μμfd. mica, one at each end of rotor of C_{14}.
N — Neutralizing condenser (see text).
R_1 — 100,000-ohm volume control.
R_2 — 750 ohms, ½-watt.
R_3 — 0.25 megohm (not marked in diagram).
R_4 — 50,000 ohms, ½-watt.
R_5 — 5000 ohms, ½-watt.
R_6 — 25,000 ohms, ½-watt.
R_7 — 0.1 megohm, ½-watt.
R_8 — 75,000 ohms, ½-watt.
R_9 — 5000 ohms, 1-watt.
R_{10} — 3000 ohms, 10-watt.
RFC_1 — 2.5-mh. r.f. choke.
RFC_2 — V.h.f. choke (Ohmite Z-1).
T_1 — Microphone transformer (Thordarson T-58A37).
L_1 — 10½ turns No. 20 e., spaced to occupy 1 inch on a 1-inch diameter form; cathode tap 2½ turns up. Plugged into socket on chassis.
L_2 — 14 turns No. 20 e., spaced to occupy 1⅛ inches, 9/16-inch diameter; self-supporting (see text).
L_3 — 4 turns No. 20 e., ½-inch diameter, ¼-inch long.
L_4 — 6 turns No. 14 e., ¾-inch inside diameter, wound to occupy 1-inch length, with ⅜-inch gap in center for swinging link of 2 turns No. 14 e., same diameter.

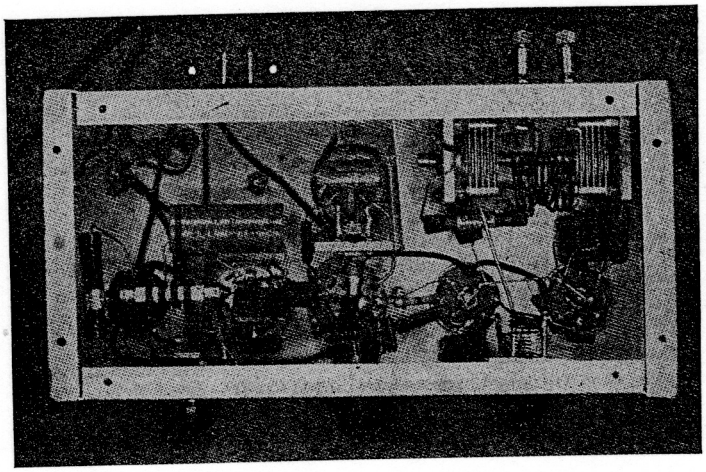

Fig. 1524—A view underneath the chassis of the 56-Mc. f.m. transmitter shows the volume control at the left, the oscillator control at the center, the doubler tuning control at the right, and the final amplifier tuning control at the side. The microphone connector is on the left side of the chassis, and the four-prong plug and flexible wire connect to the power supply and microphone battery, respectively. Note the shield between the final tuning condenser and the oscillator tuning condenser, to reduce reaction between the two circuits, and the wire running from the doubler tuning condenser to near the final tank condenser which is used as a neutralizing condenser (*N* in Fig. 1523). The output connects to two binding posts on a Victron strip.

crease in output of the amplifier. The 7C5 final amplifier is plate neutralized by running a length of stiff wire from the plate side of the doubler tuning condenser over to a point near the open side of the final-amplifier split-stator tuning condenser. The capacity from this wire to the stator of the condenser is sufficient to neutralize the final amplifier. It may be adjusted by snipping off the end of the wire, a small bit at a time, until the plate-tank tuning shows no reaction on the grid current (with both plate and screen voltage off).

No difficulty should be encountered in adjusting the transmitter other than setting the e.c.o. coils to the proper frequencies. The grid coil should be adjusted to cover the proper range with the reactance modulator tube in the circuit. The range can be varied by pushing the turns together or spreading them apart, while checking the resulting frequency on a calibrated receiver. The e.c.o. plate coil can best be adjusted by reading grid current to the final amplifier (by connecting a 0-1 ma. d.c. milliammeter between R_8 and ground) and adjusting L_2 until the 7C5 grid current is a maximum with the oscillator set at 14.5 Mc.

The plate current of the final amplifier will be about 45 ma. when the stage is properly loaded. The loading is varied by changing the position of the "swinging link" fastened to the antenna output binding posts.

When using f.m. the amount of deviation is controlled by the setting of the gain control, R_1. With the gain control wide open the deviation is over 30 kc. on 58.5 Mc., which is more than adequate for all purposes. When the receiving station does not have a regular f.m. receiver, the signal can be received on a conventional receiver by reducing the deviation at the transmitting end and tuning the signal off to one side of resonance at the receiving end.

¶ A Complete Low-Powered 112-Mc. Transmitter

The transmitter shown in Figs. 1525, 1526 and 1527 is a complete low-powered unit using linear tank circuits instead of coils and condensers. The circuit (Fig. 1526) is of the "tuned-plate tuned-cathode" variety, which gives good stability and efficiency on 112 Mc. Using 7A4-type tubes as shown, the transmitter will deliver several watts output.

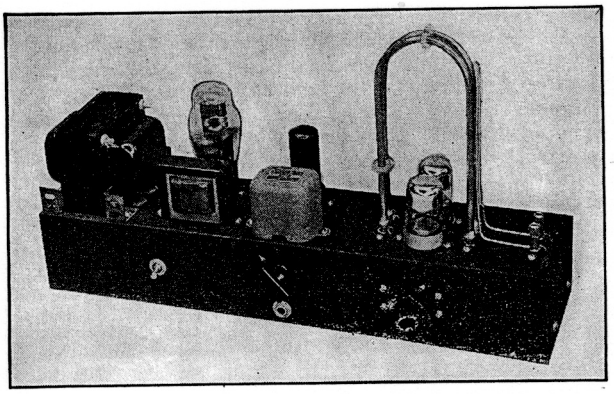

Fig. 1525 — A complete low-powered 112-Mc. transmitter using linear plate and cathode tank circuits. The cathode tuning is controlled by the knob at the right and the volume control is at the center, just above the microphone jack. The rubber grommet between the two knobs insulates the screwdriver used for plate tuning.

The transmitter, complete with modulator and power supply, is built on a 3 × 4 × 17-inch chassis. As may be seen in Fig. 1525, the power transformer, rectifier tube and filter choke are mounted at the left-hand end of the chassis, the modulator tube and microphone transformer are in the center, and the various r.f. components are on the right-hand side. The sockets for the 7A4 tubes are oriented so that the heater prongs face the left-hand end of the chassis.

The plate lines mount in National FWB terminal strips which have been equipped with banana-plug jacks. The strips are placed 2¾ inches apart, on either side of the 7A4 sockets. The plate lines are held together firmly by a copper strip at the shorted end and by improvised polystyrene spacers at

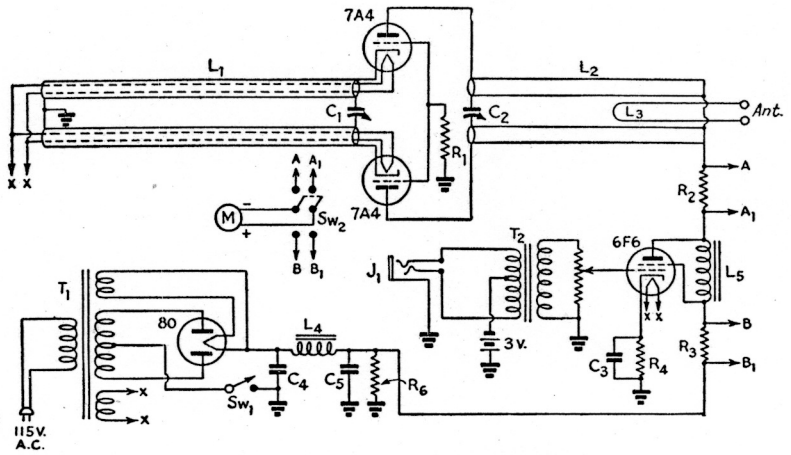

Fig. 1526 — Circuit diagram of the linear-tank low-powered 112-Mc. transmitter

C_1 — 15-$\mu\mu$fd. variable (National UM-15).
C_2 — Small disk-type neutralizing condenser (Bud NC-890).
C_3 — 25-μfd. 25-volt electrolytic.
C_4, C_5 — 8-μfd. 450-volt electrolytic.
R_1 — 10,000 ohms, ½-watt.
R_2, R_3 — 25 ohms, ½-watt.
R_4 — 400 ohms, 1-watt.
R_5 — 50,000-ohm volume control.
R_6 — 25,000 ohms, 10-watt.
L_1 — Grid lines; ¼-inch o.d. copper tubing, 11½ inches long, spaced ½-inch on centers.
L_2 — Plate lines; ¼-inch o.d. copper tubing, 15 inches long, spaced ½-inch on centers.
L_3 — Antenna coupling loop, 4 inches of No. 14 wire, ½-inch spacing.
L_4, L_5 — 10 henrys, 55 ma. (Thordarson T-14C64).
J_1 — Double-button microphone jack.
Sw_1 — S.p.s.t. toggle switch.
Sw_2 — D.p.d.t. toggle switch.
T_1 — 300-0-300 volt 60-ma. transformer with 6.3- and 5-volt windings (Thordarson T-13R17).
T_2 — Double-button microphone to single grid transformer (UTC S-6).

the center and near the plate end. These spacers are made by cutting an FWB terminal strip in half and enlarging the holes so they can accept the copper tubing. The ends of the lines must be flared out sufficiently so that they equal the spacing between the holes for the banana-plug jacks. Banana plugs are soldered to the ends of the copper tubing.

The cathode lines are mounted underneath the chassis. At one end they are connected directly to the cathode pins of the 7A4 sockets, the other ends of the cathode lines being supported by a grounded metal pillar. The cathode tuning condenser is mounted on the front wall of the chassis, while the plate tuning condenser is mounted on the rear wall. The location and mounting of the other parts may be seen in the under-chassis view, Fig. 1527.

In tuning to the 112-Mc. band, first set the plate tuning condenser, C_2, so that the spacing between plates is approximately ¼ inch. Then apply plate voltage and rotate the cathode tuning condenser, C_1, until oscillation starts, as indicated by a drop in plate current. The oscillating plate current should be about 20 ma., rising to 50 ma. or more when the unit is not oscillating. Antenna coupling is adjusted by changing the position of the antenna coupling loop, L_3, with respect to the plate lines. The coupling should be made such that the oscillator is loaded to about 35 ma.

A 0-100 milliammeter is used for measuring plate current. When it is switched across R_2 by means of Sw_2 it reads the oscillator plate current, and when it is across both R_2 and R_3 it will read the total oscillator and modulator plate current. The 6F6 should draw about 50 ma. (combined screen and plate current).

As with all self-excited transmitters, a reliable frequency-checking system should be used to insure that the transmitter is working within the assigned band. The frequency of the oscillator is lowered by first increasing the capacity of C_2 and then retuning C_1 for maximum output. Either a single- or double-button carbon microphone may be used.

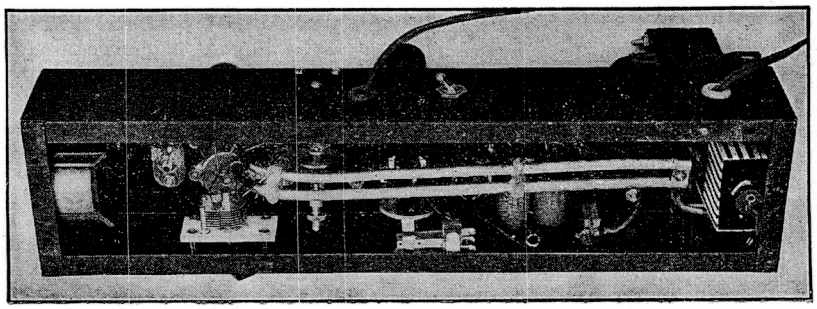

Fig. 1527 — Underneath the chassis of the linear-tank 112-Mc. transmitter, showing the cathode lines supported between the tube sockets and a metal pillar at the far end near the microphone battery. The modulation choke, L_5, is at the left-hand end of the chassis. C_1 is at the lower left, with R_5 and J_1 in the center.

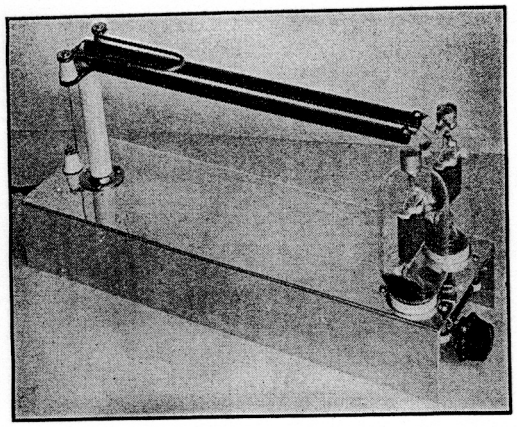

Fig. 1528 — This transmitter operates efficiently with conventional tubes at 112 Mc. A slider is used for frequency adjustment. Hairpin coupling link is at the left.

A Medium-Power Tuned-Plate Tuned-Filament Transmitter

Figs. 1528, 1529 and 1530 show the construction and circuit of another tuned-plate tuned-filament 112-Mc. transmitter. This set has much in common with the one described in the preceding section, but conventional tubes of the medium-power class are employed. Fundamentally, the circuit of Fig. 1529 is the same as that of the r.f. portion of Fig. 1526 except for the slight changes made necessary by the directly heated type of tube used. This arrangement, even with conventional tubes, operates with an efficiency of about 50 per cent.

A glance at Fig. 1528 will show the arrangement of the plate circuit, supported on top of the chassis. The chassis is 4½ inches wide, 15 inches long, and 2½ inches deep. There is no tuning condenser for the plate line; a condenser may be used, if desired, but for best efficiency the line should be made as long as possible. The line is relatively short for the frequency, the reason being that the internal tube leads make a considerable addition to the actual length of the line, plus the loading effect of the tube plate-grid capacity.

The high-voltage connection, brought through an insulator in the chassis, is shown in Fig. 1528 just to the left of the supporting insulator. The antenna coupling link, L_3, is made from small-diameter copper tubing; its length should be adjusted to give the desired loading with the antenna used.

Fig. 1530 is a view of the tuned filament circuit located underneath the chassis. Each pipe is soldered to, and partly supported by, a filament prong on each tube socket. The shorted end of the line is held in place by a metal pillar, which also makes the connection to the chassis ground. An insulated wire is fed through each pipe and connected to the other filament prong on the appropriate socket. These wires are connected together at the shorted end, and the filament voltage is applied between this common connection and ground.

C_1, the filament-line tuning condenser, rests on the insulated portions of the sockets and is securely mounted by two small aluminum brackets which fit under the socket-mounting screws. Care must be taken to prevent grounding of the condenser plates. A short connection is made between the two grid prongs on the sockets; the grid resistor, R_1, runs from the center of this connection to ground.

Fig. 1529 — Circuit diagram of the medium-power 112-Mc. oscillator.
C_1 — 15-$\mu\mu$fd. variable.
R_1 — 5000 ohms, 10-watt.
L_1, L_2 — Filament and plate lines; 7/16-inch o.d. copper tubing, length 12 inches, spaced diameter of tubing.
L_3 — Hairpin link for antenna coupling; length approximately 3 inches.

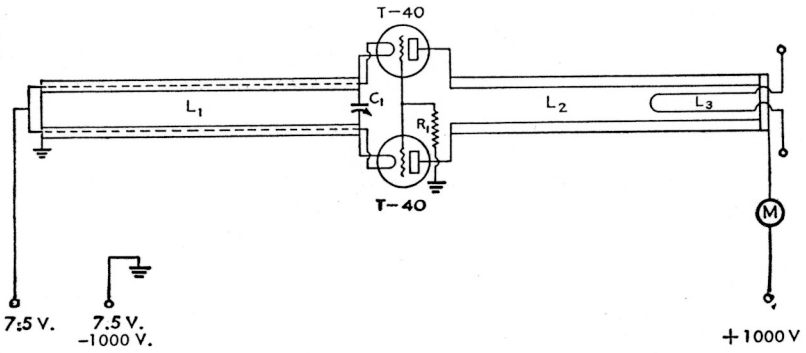

Tuning is similar to that already described for the low-power transmitter. The setting of C_1 which gives minimum plate current is not, however, the adjustment at which the oscillator delivers maximum output. A lamp-bulb dummy antenna coupled to the pipes will show that, as the condenser setting is slightly altered, the plate current will rise and the output will in-

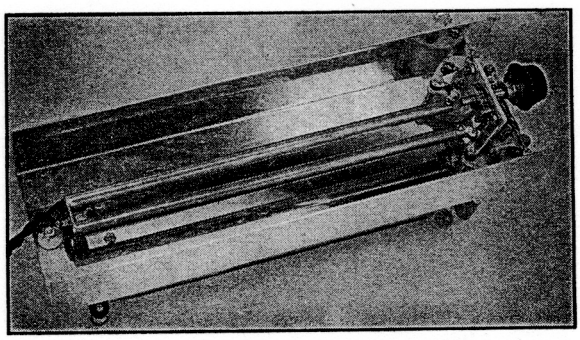

Fig. 1530 — A below-chassis view of the 112-Mc. oscillator.

crease. The current should not be allowed to exceed 200 ma. at full load.

Other tubes than the T40s shown have been used quite successfully in this circuit, including types 809, T20, RK32, RK11, RK12, 811, and TZ40. Still others of similar construction and ratings probably also would function satisfactorily. Tubes like the HK24 and 35T will work well at 224 Mc.

A modulator capable of delivering 100 watts of audio power is required when the transmitter is operated at 200 watts input. A pair of HY30Zs in Class B is recommended for the modulator unit. A suitable power supply which will furnish the necessary 200 ma. at 1000 volts is shown in Fig. 1225.

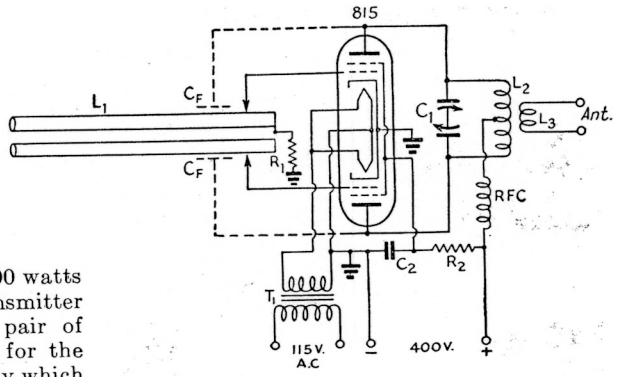

Fig. 1532 — Circuit of the grid-stabilized transmitter.

C_1 — 15-$\mu\mu$fd. dual condenser (Hammarlund HF-15X).
C_2 — 0.002-μfd. mica.
C_F — Feed-back condenser (see text).
R_1 — 15,000 ohms, 1-watt.
R_2 — 25,000 ohms, 10-watt.
L_1 — ½-inch diameter copper tubing, 23 inches long, spaced 1 inch on centers; grids tapped 2¾ inches from shorted end.
L_2 — 2 turns No. 12 e., 1-inch diameter, turns spaced to occupy ¾ inch.
L_3 — 2 turns No. 12 e., ¾-inch diameter, turns spaced to occupy ¼ inch.
RFC — V.h.f. r.f. choke (Ohmite Z-1).
T_1 — 6.3-volt 2-ampere filament transformer (Thordarson T-19F81).

A Grid-Stabilized 815-Tube 112-Mc. Transmitter

The transmitter shown in Figs. 1531, 1532 and 1533 uses an 815 dual beam-power tube in a grid-stabilized oscillator circuit which can be used at an input of 60 watts with good efficiency. The circuit (Fig. 1532) is the basic tuned-grid tuned-plate circuit except that a linear tank instead of a coil and condenser is used in the grid circuit. By tapping the grids down on the line the loading is light, and consequently the line retains its high *Q*. The 815 does not have high enough grid-plate capacities to give all of the necessary feed-back, and some additional capacity must be added between plate and grid in both sections of the tube. This is easily done by running two short lengths of wire from the plate terminals to near the grid lines (C_F in Fig. 1532).

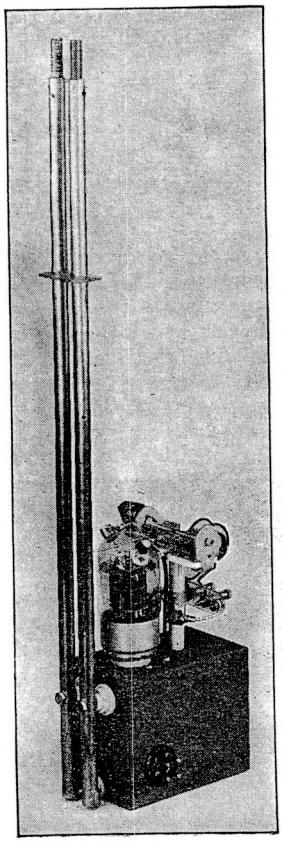

Fig. 1531 — The grid-stabilized 815 112-Mc. transmitter is mounted on a 3 × 4 × 5-inch box. Frequency is changed by adjusting the length of the grid lines by sliding the inner tubes in and out. The power-supply cable plug is mounted on the side of the box.

The transmitter is mounted on a 3 × 4 × 5-inch metal box which houses the filament transformer and the various fixed condensers, resistors, and the r.f. choke. The grid line is made of ½-inch copper tubing and is supported one-half inch from the box by three feed-through insulators, which also serve as convenient connectors to the grids and to the grid leak. The open ends of the parallel tubes are fitted with 3-inch lengths of ⅜-inch diameter tubing which can be moved in and out to adjust the frequency of the oscillator. The extensions are held securely in place by set screws in holes tapped through the wall of the ½-inch outer tubing.

The plate tuning condenser is supported by a 3-inch steatite pillar which also acts as a guide for the sliding variable antenna coupling. Two large 866-type plate clips are slid over the pillar, and the antenna binding-post assembly (National FWB) is fastened to them with short lengths of No. 12 wire. By sliding this assembly up and down, the antenna coupling can be set to any value desired.

There is nothing unusual about the tuning of the transmitter, aside from the adjustment of the feed-back condensers. This can best be done with a dummy load, such as a 25-watt lamp bulb, connected to the antenna terminals. The lead from the grid leak, R_1, to ground should be opened and a 0-10 milliammeter connected in the circuit. With plate voltage applied, the plate tuning condenser should be rotated for maximum output as indicated by the brilliancy of the lamp. The grid current should be between 3.5 and 5 ma. at this point. If it is higher there is too much feed-back, and the feed-back capacity should be reduced by trimming off a short length of the wire or by moving it away from the grid lines. This adjustment is not critical, but it should be made before the transmitter is put on the air. After the proper feed-back adjustment is found, the antenna can be

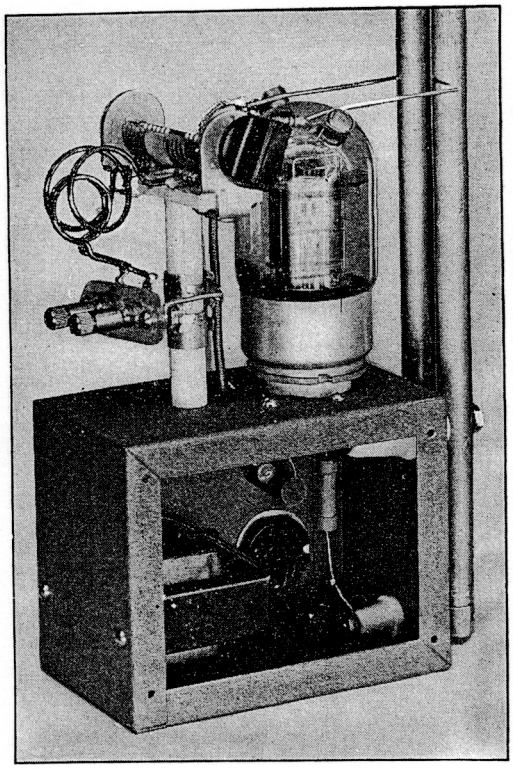

Fig. 1533 — A close-up view of the 815 transmitter, showing how the antenna coupling is changed by sliding the antenna-coil support on the insulating pillar. Note the wires for feed-back control running from the plates of the 815 close to the grid lines. The filament transformer and the various resistors and by-pass condensers are mounted in the box, shown here with one side removed.

coupled to the transmitter and modulation applied. The frequency may be checked by means of Lecher wires or a frequency meter. The antenna coupling should be tightened until the plate current is 150 ma.; the grid current should be between 3.5 and 5 ma. under these conditions.

The power supply is required to deliver slightly over 165 ma. at 400 volts, and the modulator must give at least 30 watts to modulate the oscillator fully. A pair of 6L6s in Class AB_1 will be satisfactory for the modulator, while the 400-volt supply can be the same as suggested for Fig. 1512.

A 15-Watt 112-Mc. Transmitter for Mobile Use

The transmitter shown in Figs. 1534–1537, inclusive, is designed to be used in an automobile in conjunction with a vibrator power supply giving 100 ma. at 300 volts. The most convenient place to mount it is in the trunk compartment at the rear of the car, and a control system is shown for operating the unit from the driver's seat. The oscillator is operated at 15 watts input, and delivers enough power output to give an excellent account of itself.

As may be seen from Fig. 1535, the oscillator uses an HY75 tube in the ultraudion circuit, using fairly high C to improve the carrier stability and reduce frequency modulation. Coupling between the oscillator tank circuit and the antenna is varied by means of a swinging link.

The audio portion of the transmitter employs a single-button carbon microphone working into a 6C5 Class-A driver stage, which is transformer-coupled to a 6Y7G Class-B modulator. With a 6-volt microphone battery, the output is more than adequate for full power output from the speech system. The Class-B modulator gives higher power efficiency and lower average plate current than a Class-A modulator, and, as a result, the proportion of the limited power-supply output current which must be reserved for the audio section is relatively low. The 6Y7G, an octal-based version of the 79, requires a plate-to-plate load resistance of about 14,000 ohms. The oscillator, operating with 300 volts at 50 ma., represents a load impedance of 6000 ohms, so that the primary-to-secondary impedance ratio required in the coupling transformer is 2.3 to 1. With the transformer specified a close approximation to this ratio is secured when the taps specified for matching 4500 ohms to 10,000 ohms are used.

The transmitter is enclosed in a 5 × 6 × 9-inch metal cabinet. Most of the parts are mounted on a chassis (ICA) measuring 4¾ × 8½ × 1½ inches. The panel and chassis are fastened together by the mounting sleeves for the d.c. input plug, gain control and jacks which may be seen in Fig. 1534; the microphone jack, J_3, is the one at the right. The feed-through insulators which serve as antenna terminals may be seen at the top left-hand corner of the panel. A hole for screw-driver tuning of the oscillator is drilled below one of the antenna insulators. This hole preferably should be drilled after C_1 has been mounted, to insure that it lines up with the condenser shaft. The swinging-link control shaft is located to the right of this hole.

Fig. 1536 shows the chassis arrangement of the main components for the transmitter. The 6C5, T_2, the 6Y7G and the HY75 may be

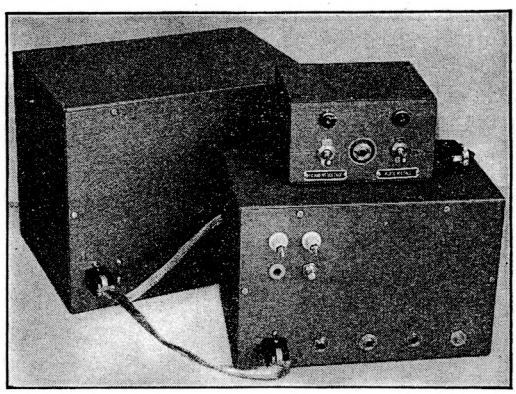

Fig. 1534 — A complete 112-Mc. mobile transmitter before installation. The vibrator supply is in the large box at the rear. The two larger units may be installed in the trunk compartment of the car, while the control box is mounted near the operator in the driver's seat.

seen from left to right along the rear edge of the chassis. T_1 is located at the front left-hand corner, with T_3 to the right. C_1 is mounted on a stand-off insulator which elevates the condenser mounting bracket 1⅝ inches above the base. The nut which clamps the mounting bracket and condenser together should be loosened and the bracket rotated 180 degrees; this reduces the length of the leads associated with the tuned circuit. The condenser shaft should be slotted with a hack saw to allow screw-driver adjustment.

The r.f. circuit arrangement is kept as compact as possible. The plate r.f. choke is to the left of the tube, and the grid choke, C_2 and R_1 are at the right. L_1 is soldered directly to the terminals of C_1. Small-sized shield braid is used for the flexible lead between the HY75 plate cap and the tuned circuit.

The swinging link is easily constructed. It is made from a panel-bearing assembly with the shaft extension cut down to a length of 1 inch. A piece of ¼-inch polystyrene rod is fastened to the metal shaft by means of a solid metal shaft coupling. The ends of the link winding pass through holes drilled in the polystyrene rod; adequate rigidity will be obtained if the holes in the shaft are not made too large and the wires are cemented in place. The projecting end of the panel-bearing shaft is slotted, to facilitate screw-driver adjustment.

Fig. 1537 shows the arrangement of the parts mounted beneath the chassis. C_3 and R_2 are at the upper left-hand corner. C_4 is the tubular condenser connected between the tube socket and the microphone jack. The shaft of the audio gain control, R_3, should be slotted before the resistor is mounted. The four-prong power plug is mounted on the panel and projects through a 1⅜-inch hole in the chassis wall.

The cabinet has rolled-over edges to which the panel is fastened. The panel and chassis assembly cannot be slipped into the case unless the edges on the bottom and sides are cut out; the entire length of the side pieces need not be removed, but the bottom edge should be cut off completely.

The control-box components all are housed in a 3 × 4 × 5-inch metal utility box. The four-prong power plug is mounted at one end of the box and the rest of the parts are mounted on one of the long sides. The microphone battery also can be placed inside the case, if desired; however, this calls for filing down the turned-down edges, since the opening is a bit too small to pass an ordinary 6-volt dry battery such as the Burgess No. F4PI.

Heavy-duty toggle switches should be used for the storage-battery circuits. Most radio parts dealers carry switches of a type designed to handle 12 amperes at 125 volts. These switches are usually of the d.p.s.t. variety, and the poles may be connected in parallel to increase the safety factor.

Plate current can be measured by using a 0–100 milliammeter fitted with a plug for the

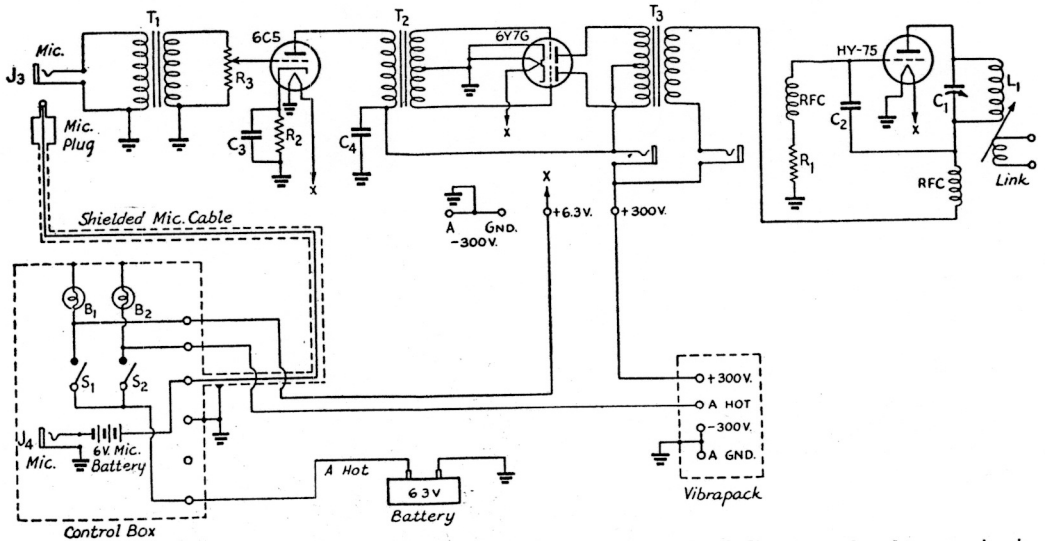

Fig. 1535 — Wiring diagram of the 15-watt 112-Mc. mobile transmitter, including control and power circuits.

C_1 — 35-$\mu\mu$fd. midget variable (Hammarlund HF-35).
C_2 — 100-$\mu\mu$fd. mica.
C_3 — 10-μfd. 50-volt electrolytic.
C_4 — 8-μfd. 450-volt electrolytic.
R_1 — 5000 ohms, 1-watt.
R_2 — 1000 ohms, 1-watt.
R_3 — 0.1-megohm variable.
L_1 — 2 turns of ⅛-inch diameter copper tubing, ¾-inch diameter, turns spaced ⅜ inch.
Link — 2 turns No. 12 wire, ¾-inch diameter, turns spaced twice wire diameter.
J_1, J_2 — Midget closed-circuit jack.
J_3, J_4 — Midget open-circuit jack.
S_1, S_2 — Heavy-duty d.p.s.t. toggle switch.
B_1, B_2 — 150-ma. dial light.
RFC — V.h.f. r.f. choke (Ohmite Z-1).
T_1 — Single-button microphone to single or push-pull grids (Thordarson T-86A02).
T_2 — Interstage audio, single plate to push-pull grids (Thordarson T-19D06).
T_3 — Output transformer, 10,000-ohm primary to 4500-ohm secondary (Thordarson T-17M59).

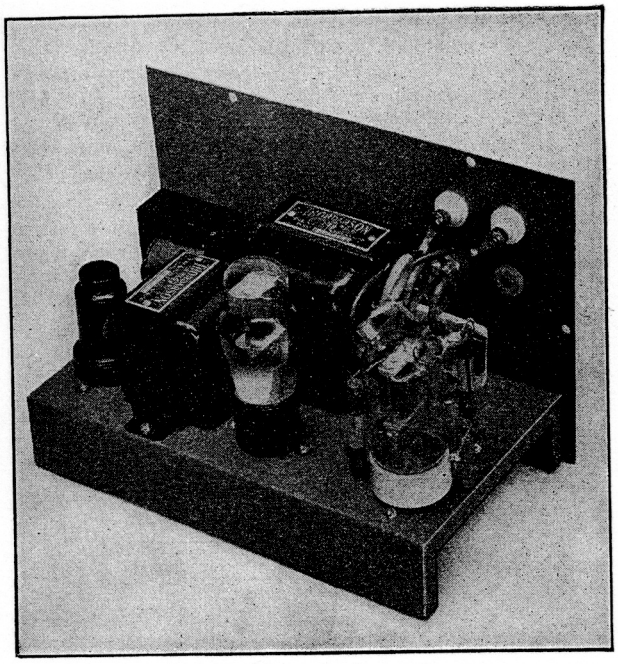

Fig. 1536 — Rear view of the 15-watt 112-Mc. mobile transmitter.

plate jacks, J_1 and J_2. The oscillator plate-current reading should be approximately 35 ma. with no antenna load connected and with 300 volts on the plate. The antenna coupling and tuning should be adjusted to obtain a full-load current of approximately 50 ma., using the loosest antenna coupling which will give the desired plate current.

The modulator plate-current reading should be about 25 ma. without speech and should rise to about 100 ma. on modulation peaks. Under full modulation the plate current of the oscillator will kick downward slightly because of the lowered oscillator plate voltage caused by the power-supply regulation as the modulator current increases.

The preliminary testing might well be carried on with a dummy load coupled to the oscillator. As a matter of fact, this procedure is recommended unless the transmitter frequency has been set inside the 112-Mc. band before the actual installation in the automobile is started. In any event, always check the frequency carefully each time before starting regular operation because the antenna loading will affect the frequency. Also, because the oscillator has a high-C tuned circuit, a small variation in the setting of C_1 will cause a considerable jump in frequency. It is wise to check the frequency whenever an adjustment of any kind is made. Frequency checking can be done with an absorption-type frequency meter, with Lecher wires, or by listening on a calibrated receiver.

A 300-volt 100-ma. vibrator-type power supply is recommended for mobile operation. The self-rectifying type is the least expensive and places the smallest load on the car battery. However, any supply that will deliver the necessary voltage and current will be quite satisfactory. An a.c. supply for testing purposes may also be provided; it should have the same output capabilities as the vibrator supply, and should include a filament transformer designed to deliver 6.3 volts at 3 or 3.5 amperes.

The antenna can be either a quarter-wave (24-inch), or a half-wave (50-inch) rod. It is easiest to feed the antenna with a short length of two-wire transmission line, tuning the system by connecting a small 15-$\mu\mu$fd. condenser across the link or in series with the line, depending on the length of the line. The antenna tuning condenser may be mounted right on the antenna terminals of the transmitter.

The control box should be mounted at some convenient point near the driver's seat, either under the dash or above it. Fig. 1535 shows how the control box is wired into the circuit, and Fig. 1427 shows how receiver control can be included in the arrangement to give a complete mobile station.

The four leads which run from the control box to the transmitter in the trunk are encased in large-sized spaghetti tubing and shielded.

The power-supply unit also is housed in a metal cabinet, for good appearance as well as for protection. Both cabinets (transmitter and power supply) should be bolted to the trunk floor before the rest of the equipment is installed. The transmitter and supply can then be slipped in place and bonded together and to the car frame.

Current and voltage readings will be low unless the power unit and the transmitter filaments receive the full battery voltage. The slight drop caused by long leads can be tolerated if the car battery voltage is up to standard, but a run-down battery may cause trouble. The voltage at the transmitter will be variable, because the voltage at the battery terminals ranges all the way from 6 to 8 volts depending on whether or not the car motor is running. Sufficient voltage should reach the equipment if motor is turning over at a speed which causes the dash ammeter "charges" to indicate. (*Bib.* 5.)

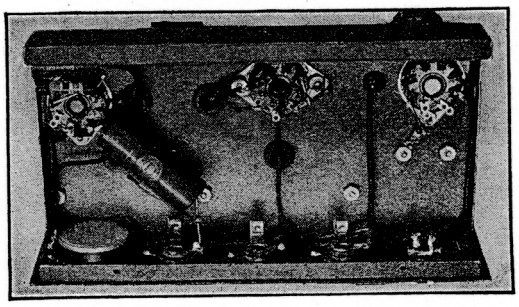

Fig. 1537 — Bottom view of the mobile transmitter.

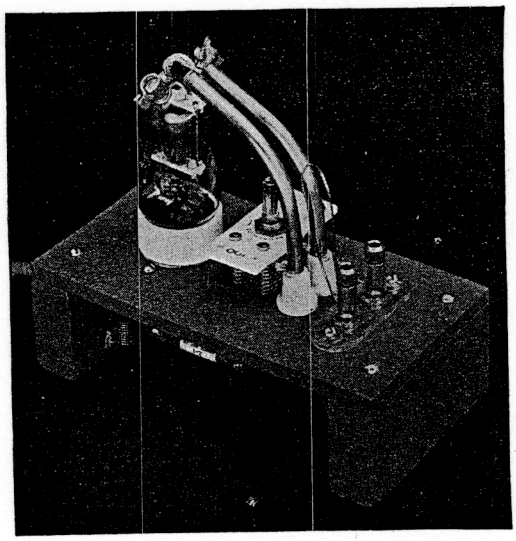

Fig. 1538 — A 224-Mc. transmitter using an HY75 tube. A rectangular hole in the top of the chassis allows the tuning condenser to be placed for shortest leads. The condenser is adjusted by an insulated screw driver.

A Transmitter for 224 Mc.

At frequencies higher than 116 Mc., considerable difficulty is found in getting good performance with tubes other than those designed expressly for v.h.f. operation. However, there are several inexpensive tubes available to the amateur that will perform well on 224 Mc. The transmitter in Figs. 1538–1540 shows how one of these, the HY75, may be put to work.

The transmitter is built on a 3½ × 6½-inch piece of ¼-inch Presdwood supported by two strips of 1 × 2-inch wood. A rectangular hole is cut in the center of the Presdwood to accommodate the tuning condenser, which is supported by two metal pillars at one end. The tuned circuit consists of two lengths of ¼-inch copper tubing, 3½ inches long, which are supported at one end by two feed-through insulators. The ends of the screws in the feed-through insulators are sweated into the ends of the tubing, and the tuning condenser is connected to two lugs right at this point. Connections from the tubing to the grid and plate terminals on the tube are made by ½-inch lengths of flexible shield braid. The filament chokes, the plate r.f. choke, and the grid leak are mounted under the chassis.

The antenna-coupling circuit consists of a loop of wire parallel to the copper tubing and terminating in the antenna binding posts. Coupling is varied by moving the loop nearer to or farther away from the copper tubing.

The transmitter should first be tested with a dummy load. A 10-watt lamp bulb is excellent for the purpose. The load is connected to the antenna posts and the power supply turned on. If everything is connected properly the lamp will light, its brilliancy depending upon the tightness of coupling and the setting of C_1. It will be found that the output is greater towards the maximum-capacity end of the range of C_1. The frequency coverage of the transmitter should be checked, using Lecher wires or a frequency meter, to make sure that it will cover the desired range. The coverage can be adjusted slightly by changing the separation of the copper tubes; if this is not enough, the tubes will have to be made shorter or longer. The tuning condenser is adjusted by means of an insulated screw driver.

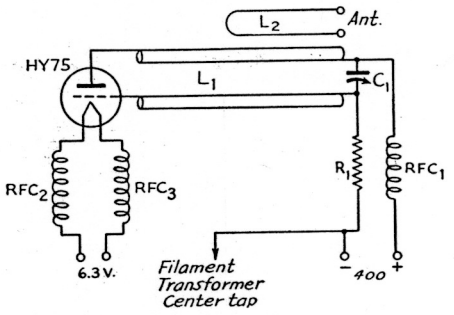

Fig. 1539 — Wiring diagram of the 224-Mc. oscillator.
C_1 — 100-$\mu\mu$fd. midget variable (National UM-100).
R_1 — 5000 ohms, 10-watt wire-wound.
L_1 — ¼-inch copper tubing, 3½ inches long, spaced ½-inch on centers.
L_2 — 2-inch loop of No. 16 bare wire.
RFC_1 — V.h.f.r.f. choke (Ohmite Z-1 or Z-0).
RFC_2, RFC_3 — 10 turns No. 18 e., close-wound on ½-inch diameter, self-supporting.

The transmitter requires a plate power supply delivering 60 ma. at 400 volts, and the modulator unit should be capable of furnishing 12 watts of audio power. The 6A6 modulator described in Chapter Thirteen will be quite adequate for the purpose.

Because of its small size, a transmitter of this type can be built as a unit into a rotatable antenna for the 224-Mc. band, if desired. It is desirable not to run a feed line for any great distance at this frequency, because of the possibility of radiation from the line.

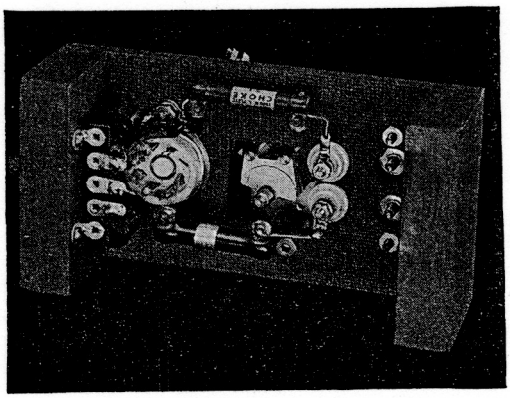

Fig. 1540 — The r.f. chokes and the grid leak are mounted under the chassis of the 224-Mc. transmitter. The power-supply cable is brought through a hole in the side piece to a tie strip mounted on the left-hand side.

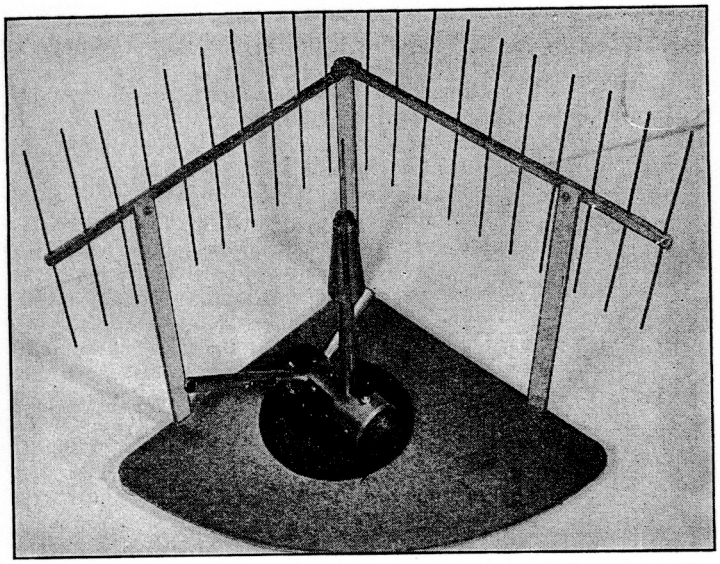

Fig. 1541 — A 750-Mc. transmitter using an acorn triode as an oscillator. The concentric antenna is an integral part of the oscillator unit. The square-corner reflector concentrates the radiation in the desired direction. (W6IOJ.)

¶ Microwave Oscillators

In the microwave region — roughly, on wavelengths below one meter or frequencies above 300 Mc. — there is opportunity for much interesting experimental work. Figs. 1541 to 1545 show two oscillators which illustrate the type of construction necessary in this frequency region. The oscillator in Fig. 1542 is designed to work at approximately 400 Mc., and that in Figs. 1544–1545 — also shown, complete with antenna and reflector system, in Fig. 1541 — operates at 700–750 Mc. Both oscillators use the quarter-wave parallel-line circuit shown in Fig. 1543, and both employ concentric antennas which are made a permanent part of the oscillator.

The half-wave parallel-rod type of oscillator is used because of its unfailingly consistent operation and because of its ability to transfer a relatively large percentage of its power output into the antenna, as compared to other oscillators designed for higher stability. Although the stability of the parallel-rod oscillator is relatively poor, in many cases the lack of stability in a microwave oscillator lies not so much in the electrical design as in the mechanical construction. With this in mind, the oscillator should be required to tune smoothly, be shielded from external objects to minimize stray radiation, and have a mechanically rigid antenna system.

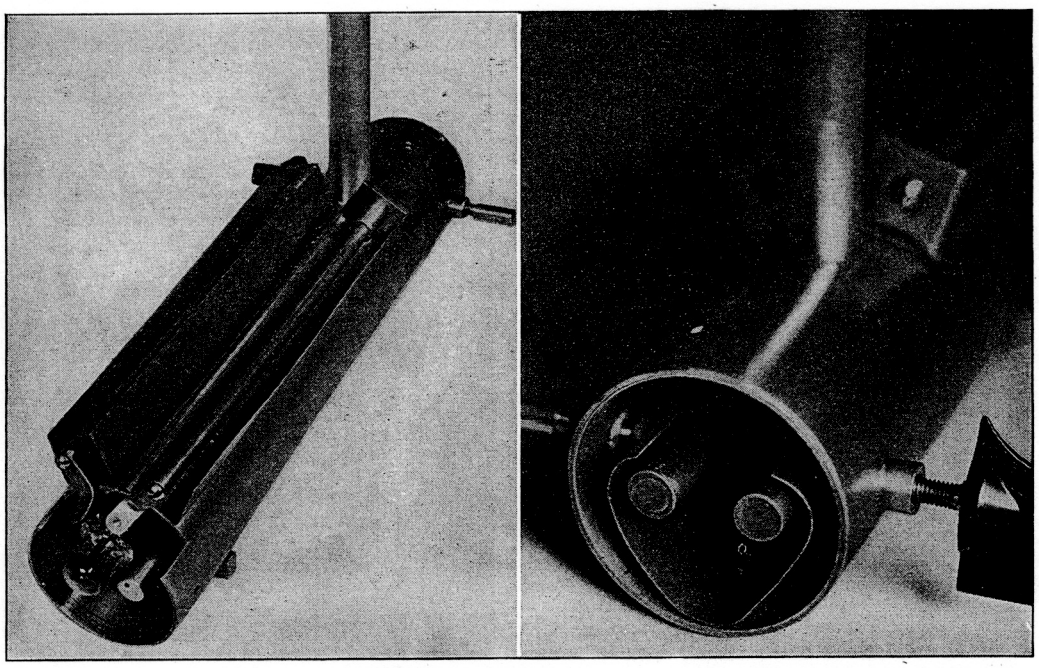

Fig. 1542 — Left — A general view of the 400-Mc. oscillator. The parallel-line tank circuit is mounted inside a 2-inch copper pipe which serves both as shield and as mounting base. The 955 acorn tube is mounted at the ends of the resonant line. Trough lines $\frac{3}{8}$-wavelength long are used for tuning the filament circuit in this oscillator. The vertical pipe at the rear is the concentric line to the antenna. *Right* — The tuning mechanism of the 400-Mc. oscillator. Only one adjustment actually is used in tuning; the other balances the line for maximum output.

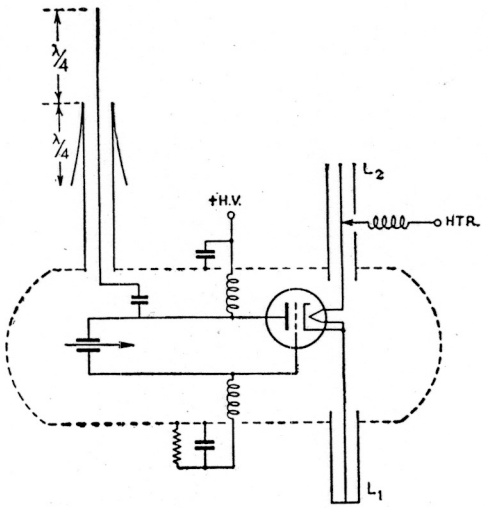

Fig. 1543 — Circuit of the shielded parallel-rod microwave oscillator. The parallel resonant lines are made of 5/16-inch copper tubing, spaced ½ inch between centers. The lines are 4 inches long for 750–800 Mc., 10 inches long for 400 Mc. The closed filament line (L_1) for 750 Mc. is slightly longer than one quarter wave. L_2 is the length of L_1 plus a quarter wave. The 400-Mc. filament circuit is made of two trough lines, each ⅜-wave long; one line is insulated from the shell by a thin mica sheet.

A length of 2-inch copper pipe is the basic structure for each oscillator. This pipe serves the dual purpose of effectively shielding the parallel rods and of forming a solid mechanical support for everything connected with the oscillator. It also provides an excellent ground for radio-frequency by-pass condensers at any point on its surface. Shielding of the parallel rods aids stability by eliminating all hand-capacity effects, and also allows perfect by-passing for the power leads.

The mounting of the tubes as shown in the photographs indicates the precautions that must be taken to prevent loses. All connections should be direct, and no insulation should be used to support the leads if they are at voltage loops. The tuning system again illustrates the necessary low-loss construction.

The tuning system may be compared to the usual variable condenser; the surfaces of the rods act as the stator plates of the condenser and the grounded copper strip, which is varied in distance from the parallel rods, is analogous to the rotor.

Filament lines are not actually necessary for operation of the 955 tube on 400 Mc., since filament "chokes" would serve practically the same purpose. The lines are used in this case to simplify the design and to stabilize the mechanical construction, however. The use of such lines leaves no doubt as to the efficiency of the filament circuit, and, as the frequency is raised, their superiority over r.f. chokes becomes the more pronounced.

Figs. 1542 and 1545 show two types of construction for the filament lines. The trough line of Fig. 1542 facilitates adjustment, since it is an easy matter to insert sliders between the trough and the inner conductor to adjust the electrical length for optimum performance. One trough line is fastened solidly to the shielding pipe, while the other is insulated from the pipe with thin mica sheet for the filament return connection.

Use of concentric line instead of the trough complicates the manner of adjustment. The line with the closed end, projecting to the right in Fig. 1545, is cut to approximate length and soldered in place with no means of adjustment, while the second line is made a quarter wave longer. The end of the longer line is at a voltage node and is left open, allowing the length of the inner conductor to be varied for filament-circuit adjustment. At the same time, it leaves one side of the filament insulated from the shield. The filament connection is made through an r.f. choke tapped at the current loop on the inner conductor.

The coaxial antenna consists of a quarter-wave radiator with a quarter-wave skirt attached to the outer conductor. The skirt in this case is made of sheet copper, bent so that the upper end fits tightly over the outside conductor, while the bottom flares out so that it will have a clearance of one-half to one inch from the coaxial line. Four or more quarter-wave wires or copper-tubing elements may be used

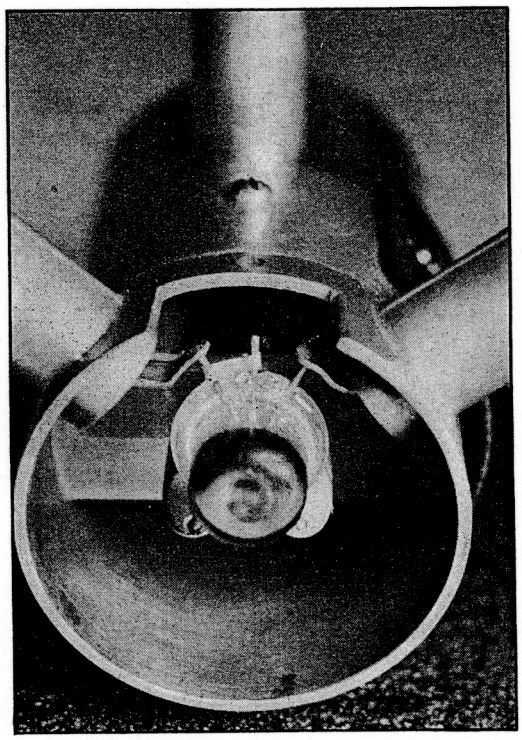

Fig. 1544 — End view of the 750-Mc. oscillator. The grid and plate pins of the 955 acorn tube are inserted in small holes in the ends of the parallel rods, with the filament connections being made through small spring connectors which also hold the tube in place. The cathode pin is strapped to one of the filament pins, as shown.

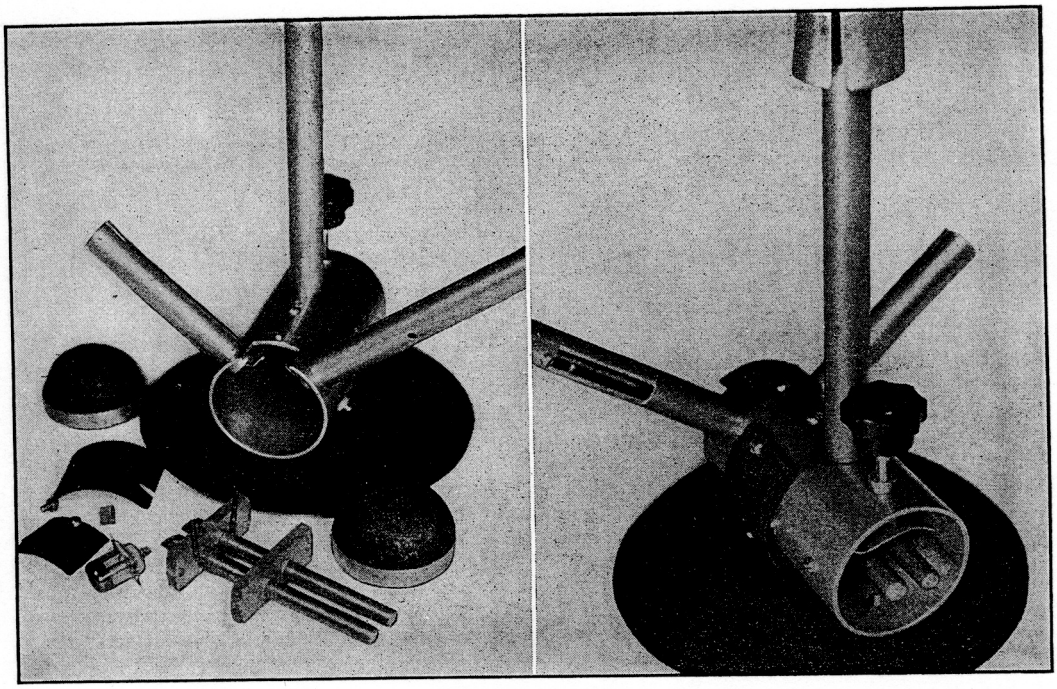

Fig. 1545 — Left — The 750-Mc. oscillator disassembled, showing the 2-inch outer shell with the filament lines and the radiator in place. The tuned-circuit parallel lines with their polystyrene insulators are in the foreground, with the feed chokes projecting upward at the terminal ends. The hemispherical end shields are of hammered copper, made to fit tightly inside the ends of the shell. *Right* — The tuning mechanism of the 750-Mc. oscillator. Turning the knob in its threaded bushing varies the spacing between the curved copper strip and the parallel-rod assembly. At the top may be seen the lower part of the "skirt" or lower quarter-wave section of the concentric antenna.

in place of the skirt with practically the same results. In coupling the coaxial line to the oscillator, either inductive or capacitive coupling may be used. Although the inductive coupling is the most convenient, as the frequency is raised the capacitive coupling appears to be the more satisfactory.

In the case of the 775-Mc. oscillator, there is sufficient coupling through the capacity between the rod and a copper strip, a quarter of an inch wide and three-quarters of an inch long, lying parallel to the plate rod; this strip is connected directly to the coaxial line.

The best method of adjusting the antenna coupling is through the use of a field-strength meter. As shown in Fig. 1546, a crystal detector in the center of a half-wave pick-up antenna, coupled through r.f. chokes to a 0-1 ma. meter, will serve as a field-strength meter of ample sensitivity. With this type of indicator, good readings have been obtained at distances of four or five wavelengths from the transmitter with only a few watts input.

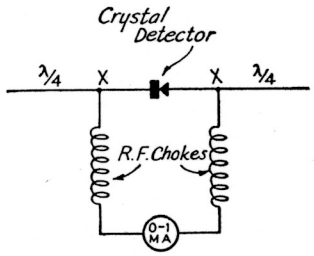

Fig. 1546 — Simple field-strength meter for checking microwave or very-high-frequency radiators. It may also be used as a sensitive indicator when making frequency measurements by connecting Lecher wires at *X-X*.

In use, the 400-Mc. oscillator operates normally in every way. The radiated output is as good or better than that of the average 112-Mc. transmitter using the same power input.

The 750–775-Mc. oscillator operates near the critical frequency of the 955 acorn tube as a regenerative oscillator. The highest frequency obtainable is approximately 800 Mc., with a small usable output available at frequencies between 750–775 Mc. (*Bib.* 6.)

BIBLIOGRAPHY

[1] Chambers, "An Inexpensive 56-Mc. Exciter or Transmitter," *QST*, June, 1941. Chambers, "A Modulator and Power Supply for the Inexpensive 56-Mc. Transmitter," *QST*, August, 1941.

[2] Goodman and Bubb, "56-Mc. Transmitter for Mobile Work," *QST*, October, 1941.

[3] Goodman, "Double Beam-Power U.H.F. Transmitter," *QST*, December, 1940.

[4] Grammer, "Getting on 56-Mc. F.M.," *QST*, June, 1940.

[5] Chambers, "Mobile Transmitter for 2¼ Meters," *QST*, November, 1941.

[6] Reed, "Practical Microwave Oscillators," *QST* June, 1942.

CHAPTER SIXTEEN

The War Emergency Radio Service

SINCE the suspension of all amateur operating as such, civilian amateur radio licensees have found many practical operating and constructional opportunities in the War Emergency Radio Service. The WERS is a temporary wartime communication service established to aid in the protection of civilian life and property in the event of enemy attack or natural disasters. It shall be the purpose of this chapter to demonstrate the workings of the three categories of WERS (Civilian Defense, State Guard and Civil Air Patrol), and to show how the equipment and personnel of the stay-at-home radio amateur can best be utilized in this service.

In the original rules governing this service, issued in June, 1942, operation was authorized to two kinds of organizations, civilian defense and state guard. The civilian defense organization is under the supervision of the U. S. Office of Civilian Defense, Protection Branch, and is executed by the U. S. Citizens Defense Corps, an organization of enrolled civilian volunteers established within OCD. Civilian radio amateurs have played a greater part in CD-WERS (civilian defense WERS) than in either of the other two categories.

Practically every state now has its own state guard organization, a semi-military group established within the state to provide protection and a military reserve for duty within that state. SG-WERS (state guard WERS) is a service operated by the state for communications relating directly to the activities of the state guard or other equivalent officially recognized organizations.

In January, 1943, the FCC included a third category within this service, that of the Civil Air Patrol, a rapidly expanding organization of civilian volunteer pilots and air personnel, established originally within the Office of Civilian Defense but later absorbed into the U. S. Army Air Forces.

In each category an official is appointed by the licensee (a local municipality in the case of civilian defense stations, a state in the case of state guard, and a "wing" in the case of the Civil Air Patrol) to supervise the network, after thorough investigation and certification by the licensee. This official is called a "radio aide" in CD-WERS, and a "communications officer" in SG- and CAP-WERS. One license authorization may be issued to cover the operation of all fixed, portable, mobile and portable-mobile transmitters proposed to be used in a single coördinated system. Call letters are assigned with subnumbers, one number for each transmitter in the system; for example, WQRR-1 might be the control unit for a typical network, with WQRR-2 through WQRR-23 as subordinate units. Operation may be on any frequencies in the amateur 112-, 224- and 400-Mc. bands, using any normal type of emission, with a maximum input of 25 watts and certain stability specifications. WERS operation may take place only in those specific instances as defined hereafter, except for authorized practice blackouts and mobilizations and for weekly test periods. Station units may be operated only by the holders of WERS operator permits, available to any FCC operator licensee whose services are wanted by a WERS licensee, upon proper application with accompanying certification of the station licensee. The complete rules and regulations appear at the end of this chapter.

The radio amateur has played an important part in all three categories of this service, although perhaps more so in CD-WERS than in the other two. There is no priority rating available for equipment to be used in this service, and much of the equipment was supplied by amateurs who had it on hand or who were able to build it from parts out of their junk boxes. Amateurs themselves serve as administrators, technicians and often as operators, as well as in training additional personnel to qualify for operating assignments. Since the service has expanded greatly in scope and magnitude since its origin amateurs now represent an increasingly smaller part of the participating personnel, but an increasingly more important part by reason of their technical ability and operating experience.

¶ Civilian Defense Stations

WERS was organized primarily at the request of the Office of Civilian Defense, which wished to fit WERS units into its nationwide plans for protection against enemy attack. With the disruption or overloading of normal telephone and telegraph circuits, a CD-WERS unit provides emergency radio channels between the Citizens' Defense Corps control centers, air-raid warden posts, police, hospitals and other strategic points. They also are available for use during other emergencies endangering life, important property and public

safety in connection with civilian defense or national security and, like all other WERS stations, at the request of any agency of the United States Government during emergencies endangering the safety of life or property. Aside from those periods during which CD-WERS stations are activated for essential operation in connection with their duties, certain hours of the week have been set aside for testing and practice drilling purposes so that the personnel involved, consisting entirely of civilian volunteers who may or may not have had previous experience in radio communication, can be trained to execute their assigned duties promptly and efficiently.

Plan of organization — Under FCC regulations, a civilian defense station license is issued to any local government, such as a town, city, borough or county, but the radio aide has actual control of all units under the jurisdiction of the license. This radio aide is appointed by the licensee, who must certify, on a prescribed form, that he is of proved loyalty and known integrity. The licensee then leaves most of the responsibility for the local CD-WERS in his hands; thus it is essential that the position of radio aide be given to the best possible man available for the job.

For control, communication and air-raid warning purposes, the OCD plan of organization is based fundamentally on what is known as an *air-raid warning district.* Such a district usually contains several hundred square miles — say, for example, an area 20 or 25 miles square — and its boundaries were originally chosen in terms of telephone toll-line organization. Somewhere near the center is a *district warning center*, usually in the largest city of the area. At this center, air-raid warning and other signals are received from regional information centers, which derive their instructions from the Army defense commander. The d.w.c. has the duty of relaying certain of these signals and information to other communities in its warning area, known as *subcontrol centers.* Through its communication facilities, the warning district's defense-corps staff arranges for allocation of apparatus for fire-fighting, road clearance, etc., in the event of a heavy air raid concentrated only in parts of the area. Communication with the warning-district center is important, since CD-WERS then can take over district air-raid warning signals and other traffic if the need develops, and is assured of prompt notification should the WERS be ordered off the air by the defense commander.

The control and communications section of OCD desires the establishment of networks based on these warning districts where possible. It wishes the station license for the entire district to be held by the city in which the d.w.c. is located, with subnumbers assigned in blocks to other cities in the area. In the fictitious example shown in Fig. 1601, Centralia is the d.w.c. city of its area; it holds the license for the entire warning district, blocks of subnumbers being distributed to its communities according to their communications requirements as shown. Some of the advantages of this arrangement are:

a) The important lines of civilian telephone communication for air-raid protection are paralleled by the radio network.

b) Available frequency channels can be apportioned to adjacent communities in such a manner as to keep interference at a minimum.

c) The station units have radio channels direct into the district warning center, and may thereby be notified immediately of any shut-down order.

d) Facilities, personnel and portable-licensed equipment can be exchanged among the various communities under the license at will without special FCC authorization.

This requires a communications set-up differing but slightly from individual community plans. Organization of a group of communities under the district plan requires the utmost cooperation among the communities involved, but, once such coöperation is pledged or found to be existent, plans can go forward smoothly. Here are the preliminary steps to be taken in such organization:

a) Each interested community in the district appoints its local radio aide.

b) Local radio aides and communications officials of all local defense councils get together and appoint a district radio aide. In most districts, it has been found that a district radio aide cannot do a good job if he is also a local radio aide. The district radio aide *nominally* is designated the radio aide of the licensee, which in this case is the d.w.c. city. As seen above, however, actually he is selected by agreement among the communities concerned.

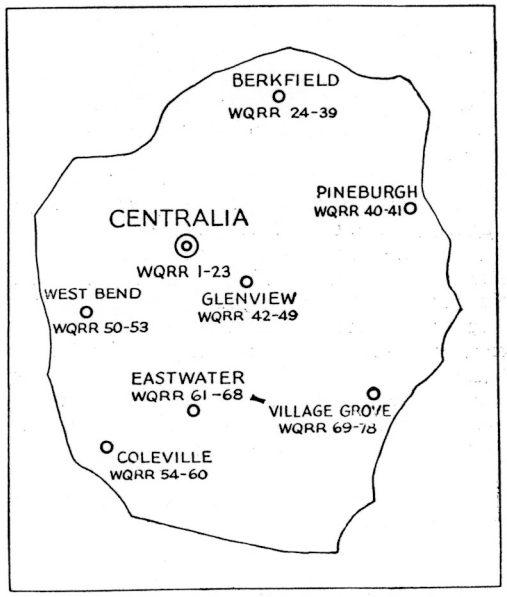

Fig. 1601 — Fictitious air-raid warning district map, showing allocation of subnumbers based on the size and communication requirements of individual communities.

c) Local radio aides then proceed to organize their own communities under the district plan, at the same time preparing the license data to be included in the license application. These data are forwarded to the district radio aide upon completion.

d) The district radio aide collects all license data from the local radio aides, executes the application, signs all operator permit applications and forwards the completed application to Washington.

It can readily be seen that licensing by districts is *not* practicable among communities which are at odds with one another. Unfortunately there are any number of reasons why district licensing might not be possible, such as: (a) the d.w.c. city may show no inclination to apply, or is in a very early stage of organization; (b) the d.w.c. city does not wish to have suburbs or adjacent communities included in its license application; (c) local defense officials insist upon an independent application, despite revelation of the advantages of the district system; (d) efforts on the part of outlying communities to help organize the d.w.c. city may have proved fruitless.

If, for one or more of the above or other reasons, it becomes necessary for communities of a district to apply independently, it is quite fitting and proper that they should do so rather than await a stalemated warning-district application. Individual communities thus applying should aim their organization at eventual consolidation with other communities of the district under the warning center. When the d.w.c. city becomes licensed, and is agreeable to a district license, the following steps then may be taken to effect a warning-area license:

a) Appointment of a district radio aide.

b) Preparation and submission of application for the entire district.

c) Surrender for cancellation of the independent licenses.

d) Request by independent licensees for special authorization to continue operation under the old license until the district license is issued.

e) Re-issuance of operator permits to be signed by the district radio aide and good for operation anywhere in the district.

Since this process will require quite a bit of altruism on the part of local communities, and since it will probably mean temporary disruption and rehabilitation of the local organization, it is quite likely that many independent licensees will be unwilling to be a party to any such scheme, preferring to maintain their independent status. It is unthinkable, however, that independent licensees should want to crawl inside their shells and have nothing to do with any adjoining licensees. If an independently licensed community finds itself unwilling to consolidate itself into the district license, the next best thing to do is to arrange for regular contact by radio with the district warning center by having one of the independent licensee's station units represent its community in an intercommunicating network consisting of the control units of each community in the district, whether or not it be under the district license. The control unit of this "district net" should be located in the d.w.c. city, since the district warning center will be the only point in the district to receive shutdown or other orders from the Army Information Center as well as the point at which requests for aid will be received from and dispatched to adjoining communities.

Frequency allocations — It is one of the duties of the radio aide to coördinate the use of available frequencies by various communities so as to keep interference at a minimum. In setting up channels for employment by WERS stations, two factors must be considered: the frequency-stability requirements of FCC regulations, and the practical effect of possible interference between stations.

There are many schemes for frequency allocation in use among the hundreds of CD-WERS licensees in existence, and the one decided upon by any particular organization should be arrived at in consideration of the specific problems confronting that organization. Without doubt many of these problems will be peculiar to that organization, and therefore it is not possible for FCC, OCD or ARRL to set down a prescribed allocation scheme. The regulations give only the stability requirements and the band limits on which to base our plan.

OCD has proposed an allocation scheme which it has called its "Tri-Part Plan." This recommendation divides the 112–116-Mc. band into four segments, three of which are for use of CD-WERS while the other segment is to be used by SG- or CAP-WERS. Each segment is divided into a number of frequency channels 200 kc. apart, and each such band segment has a specific use. Nominally, they are the local-district (LD) band (112–112.8 Mc.) for the use of local control units in communicating with the district control unit, the local-fixed (LF) band (112.8–114 Mc.) for channels between local control units and fixed units of the local organization, the local-mobile (LM) band (114–115.2 Mc.) for contact with local control units and service headquarters by mobile units, and the Civil Air Patrol band (115.2–116 Mc.) for the use of the Civil Air Patrol and State Guard in areas where these categories of the services are in operation.[1]

A simpler and probably more practicable method of frequency allocation, modifications of which are in actual use in many districts, is the following: The radio aide, in conference with radio aides of nearby districts, chooses a suitable spot on the "high stability" (112–114 Mc.) section of the band for the warning-district net, and assigns at least one additional

[1] For more details of the Tri-Part Plan, see *QST*, Feb. 1943, p. 19.

frequency to each community within the district for dispatch purposes or other use of its own choice. In the "low stability" section (114–116 Mc.) he should assign two frequencies to each community (including the d.w.c. city), one for a local net and the second for subnets of the local nets, constantly keeping in mind the geographical location of each community and the possibilities of mutual interference. Assuming that each community of our fictitious warning district intends to make full use of each each kind of service, the allocation for the first half of the band might be shown as follows:

Frequency	*Use*
112.1 Mc.	Guard Band
112.3	Warning District Network
112.5	Guard Band
112.7	Berkfield and Eastwater dispatch
112.9	Coleville and Pineburgh dispatch
113.1	Centralia dispatch
113.3	Glenview dispatch
113.5	West Bend dispatch
113.7	Village Grove dispatch
113.9	Guard Band

The second half of the band might be apportioned like this:

Frequency	*Sector Warden Nets*	*Lower Nets*
114.2	Centralia	Coleville
114.6	Village Grove, Berkfield	Glenview, Eastwater
115.0	Coleville	West Bend, Pineburgh
115.4	Glenview, Eastwater	Centralia
115.8	West Bend, Pineburgh	Village Grove, Berkfield

Actually the smaller communities may not have use for more than one channel, in which case more channels will be available for larger communities with a more complicated network scheme. An appreciable amount of duplicate and triplicate use of a single channel is quite practicable in lower nets of most warning districts. The type of receiver which will be in general use (the superregenerator) has the characteristic of featuring the loudest signal existent in its input circuit, completely annihilating any signal of appreciably less strength.

Note that 400-kc. channel separation is provided in the "low-stability" part of the band. This is to allow plenty of breathing room for each channel and provide for inevitable inaccuracy in frequency spotting by stations in the net. In the "high-stability" section of the band the channels need be only 200 kc. apart, since units capable of operating in this segment are expected to be more accurately calibrated and capable of better frequency stability.

The above plan makes no provision for State Guard or Civil Air Patrol operation in the area, but this should not imply that the possibility of their existence can be ignored. In the event that other categories of WERS *are* active, it is simply the duty of the radio aide to plan his frequency allocations accordingly, which will make the problem more complex because of resultant shortage of channels.

Because the "standard" vacuum tubes available at present do not perform efficiently

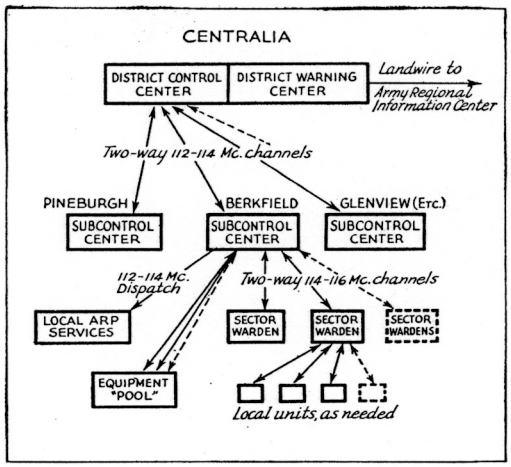

Fig. 1602 — A possible set-up of communication channels in an air-raid warning district, under one license. In this fictitious district, the city of Centralia houses the district warning center and the city itself is known as a main control center. The block "Local ARP Services" designates the fire, police, demolition-squad and other protection services to which a dispatching channel is desired. The block "Equipment Pool" designates a number of portable-mobile units available at a central point for immediate dispatch to an area suffering from unusual enemy bomb hits. For space reasons, only the Berkfield subcontrol center is shown subdivided here.

at 224 Mc., that amateur band has not been included in the basic allocations above. For organizations whose amateurs already have suitable tubes and equipment for a successful 224-Mc. communications system, additional channels are available which will simplify the problem.

Operating personnel — Everyone who operates a WERS station unit must possess a WERS operator permit. *There are no exceptions to this rule.* To be eligible for such a permit, an individual must possess a radio license of any class issued by FCC. Thus a licensed amateur is already eligible, as is any commercial radio operator; he may secure an operator's permit simply by filing a completed FCC Form 457 with his radio aide, who forwards it to FCC.

With thousands of amateurs in military and government communication service, it has been found that very few communities have sufficient licensed operator personnel to carry out a satisfactory plan of CD-WERS communication. In most communities it has been found necessary to set up brief but intensive training courses for desirable personnel aimed either at securing an amateur license or a restricted radiotelephone permit, probably with emphasis on the latter because of the comparative ease in qualifying for it.

A course for the 'phone permit might be set up for a total of six hours, in two-hour periods. A preliminary period could well be spent on presenting a general background of radio and the need for regulation and licensing; then a period of brief general exposition of the high spots of commercial rules and regulations, followed by individual discussion of typical ques-



Fig. 1603 — A typical WERS district control center station — WODF-5, Akron, Ohio. Duplicate operating positions enable dual-channel contacts with the central control station and field groups simultaneously. Auxiliary transceivers are kept in reserve to supplement regular equipment in the event of failure and for use as field units.

tions and answers; and lastly, several hours spent in simulated operation, practicing voice technique, phonetic word lists, signing the station off, repeating dummy message reports — all to make *operators* as well as licensees.

FCC commercial operator regulations provide to "employees of a division of local or state government" the convenience of "resident" examinations for the restricted 'phone permit. FCC has extended this privilege to personnel selected to operate WERS stations. In practice the municipality should communicate with the district inspector, submitting to him completed application forms with all other necessary attachments (fingerprint forms, proof of citizenship, photographs) for each applicant, along with the name of the person designated to supervise the examination (who might well be the radio aide) and the date and place it will be given. In the case of WERS stations, resident examinations will not be authorized prior to the issuance of the station license. Please note that this convenience applies to the restricted 'phone permit only — not to amateur licensing.

Operating procedure — One of the greatest faults with many CD-WERS organizations is that either they have failed to evolve any operating procedure or the procedure they have adopted is inadequate or unbecoming a government communications service. Realizing that the procedure used necessarily would vary according to the particular situation involved FCC did not limit WERS operation to any set form, except for a requirement that the procedure to be used be described as one of the supplementary statements in the application. From this it is not to be concluded that WERS units may say what they please on the air or conduct their operation in any way they see fit. "Ragchewing," attempting to establish DX records, and experimenting on the air except for the sole purpose of establishing reliable communication between two or more licensed points, especially are to be discouraged. Operators should be trained to make their transmissions brief and to the point. Participating amateurs, in particular, should be watched for this discrepancy, since WERS is not an amateur service and should not be conducted like one.

It is difficult to foresee what actual communications need there will be during an air raid and therefore one can only plan as best he knows how, altering the specifications as it is found they can be improved. Thus all that can be discussed here are general principles.

Identification must be complete at the beginning and ending of each complete exchange of communication. The net control unit might call the roll and be answered by the net units in the following manner:

WXXX1: WXXX1 calling WXXX2, answer roll call, go ahead.
WXXX2: WXXX1 from WXXX2, answering roll call, go ahead.
WXXX1: OK 2. WXXX1 calling WXXX3, answer roll call, go ahead.
(Etc., until roll call completed)

WXXX1: 2 from control, ready for your traffic, go ahead.
WXXX2: Control from 2, here traffic. . . .

With enemy planes approaching, however, announcement of call letters might reveal location of units. In some sections the Army requires that call letters, as well as any other information that might be of value to the enemy, be omitted during actual air raids. At such times the Army will issue a *limited transmission order*, which will come through the district control center and must be immediately obeyed by CD-WERS networks. Identification at that time should be by unit number only, omitting all assigned call letters. *At all other times the FCC requirement that complete identification be given must be observed.*

To expedite the handling of incident reports, CD-WERS systems should use the same report forms as are used by the wardens in reporting incidents. These report forms usually consist of items numbered one to eleven. In transmitting messages using these forms the operator can merely designate the item number to follow, without repeating any other printed information on the form. Some systems of operating procedure, although following the order of the regular report form, nevertheless omit the item number altogether.

Since the urgency of messages will vary it is well to arrange priority ratings for messages, such as "regular" (a routine warden report not requiring action), "rush" (a warden report necessitating action to be taken by one of the protective services), or "duplicate" (indicating

that no action had followed a previous report and the situation was becoming urgent).

Many licensees have devised systems for coding messages transmitted over CD-WERS networks, so that their meanings would not be apparent to the casual or enemy listener. Only information that might be useful to the enemy need be coded. The only effective way of putting such a code into practice is to agree on certain letters or numbers to represent certain words or phrases, and then to practise incessantly the technique of handling traffic using such a code. Code lists may consist of frequently used phrases, each containing its code number, which cover almost any conceivable need. To indicate locations, the city can be divided into zones, each street within that zone being numbered, so that a certain street could be indicated by saying "Zone 3–14," meaning the street numbered 14 in Zone 3, or "357 Zone 3–14" if it is desired to give the number of the house affected on that street. A simpler and perhaps more effective way of coding streets is to assign a number to each street in the city or district, starting, for example, with 0001 for Aaron Street and ending with 2500 for Zephyr Way; or, if desired, the numbers could correspond to the geographical location of the street instead of its alphabetical sequence; or there need be no relation between the street and the number assigned it. In any case each station unit should be equipped with a list of the number codes, arranged both numerically and alphabetically for ease of reference in coding and decoding.

Remember, however, that in handling traffic the important thing is to get the message through quickly. After efficient speed has been developed in handling messages, it is time enough to start considering coding devices. In no case should secrecy codes be developed at too great expense in speed.

In general, the following principles of operating procedure should be applied:

a) Comply with FCC and Army regulations.

b) Make transmissions short and to the point. Eliminate all words that can be eliminated without affecting the sense.

c) Adopt a procedure which will conform as closely as possible to that used by other branches of the ARP communications service.

d) Evolve your procedure around the slogan, "The enemy might be listening," and arrange it so that a listening enemy agent in no way may be aided by your transmissions.

e) Avoid unnecessary complications. The ideal operating procedure is one which will accomplish the objectives in view as simply, quickly and effectively as possible.

Application data — The person preparing a license application must make certain that it complies with the regulations, and he should be sure to prepare the application correctly *the first time* to avoid having it questioned by FCC — a time-wasting process, both for the applicant and for the Commission. On any doubtful issue it is wise to get the advice of someone who has "been through the mill." The comments to be made here, while necessarily of a general nature, are intended to cover points on which radio aides frequently go wrong.

The station-license application should be prepared on FCC Form 455 (available at any district FCC office). It may be executed only by municipal governments, such as cities, towns, counties, etc., and *not* by any subdivision of that government such as the police department, fire department or defense council. The application must be signed by the mayor, town manager or similar highest executive official of the government. For reasons of flexibility, many licensees have adopted the practice of listing all units as "portable" or "portable-mobile" except the fixed control units.

FCC will not issue a station license unless the application shows in detail the complete set-up of civilian defense communications. Extremely important is the map of operations, which should be included as a part of the supplementary data required in the regulations. A street map, available from the city clerk, should do the trick, with overmarking to show the communications plan. It should carry the locations of all station units, and if portable units are included their boundary lines of normal operation must be indicated. For warning-district organization, probably it will be more convenient to submit first a chart of the entire district, showing the channels between district and subcontrol centers, and second a series of smaller maps showing individual communities and details of unit locations.

The license application requires a number of attachments of supplementary statements and additional information, as follows:

a) Additional lists of equipment too long for inclusion on page two of the application.

b) A number of sheets identical to page three of the application, giving technical data on types of equipment not shown thereon.

c) Form 455 (a), certification of radio aide.

d) If the licensed community wishes to provide service to additional communities (as in the district plan of licensing), copies of inter-

ARMY-NAVY PHONETIC WORD LIST

A — Affirm	J — Jig	R — Roger
B — Baker	K — King	S — Sail
C — Cast	L — Love	T — Tare
D — Dog	M — Mike	U — Unit
E — Easy	N — Negat	V — Victor
F — Fox	O — Option	W — William
G — George	P — Prep	X — X-ray
H — Hypo	Q — Queen	Y — Yoke
I — Inter		Z — Zed

0 — Zē-rō	3 — Thuh-ree′	7 — Sev′-ven
1 — Wun	4 — Fō-wer	8 — Ate
2 — Too	5 — Fī-yiv	9 — Nī-yun
	6 — Siks	

Example:
WQRR-49 — William Queen Roger Roger Fō-wer Ni′-yun

municipal agreements made between the licensee and the various other communities to be covered, properly signed in each case by the mayor or similar official, must be included.

(e) Forms 457, one for each operator authorization requested. Make certain that these are properly executed and that two full-face recent photographs, not over $2\frac{1}{2} \times 2\frac{1}{2}$ inches and signed on the back by the individual applicant, are attached.

f) The general map of operations, as discussed above.

g) A statement concerning the scope of service to be rendered and type of messages handled. That is, whether a service for air-raid wardens alone, or for emergency equipment dispatch, or "incident officer" contact, or a combination of several.

h) Factual information on the exact area of operations to be included in the license.

i) A statement of the general operating procedure to be employed by all station units.

j) A list of all equipment procured, showing source (purchase, loan, gift, etc.) and distribution (usual area of operation of each unit).

k) A statement of methods to be used in supervising the operation of all station units, including data on monitoring, frequency-measurement methods, provision for frequent inspection by the radio aide, etc. If the latter has delegated controlling authority to deputies or assistants to act for him, this item should so state.

l) Methods used to ascertain the loyalty and integrity of operating personnel. This section should include a statement from the local chief of police giving the names of all operators for whom operating permits are requested and certifying to their character and loyalty to the United States. Also include data on plans for recruiting operators and whether they will serve on a paid or voluntary basis.

m) A positive statement of the applicant's ability to silence its units upon order of the regional defense commander. This entails establishing proof of close and continuous contact with the district control center and of arrangements for the immediate relaying of any such signals. The very nature of district organization permits an easy answer to this requirement, of course.

Carbon copies of all parts of the applications should be kept in the radio aide's files, so that he will be able to refer accurately to any part of the application which subsequently might be questioned by FCC.

Sample forms of agreements which may be adapted to the needs of the particular community are shown on this page. The first is the agreement executed between the amateur and the city when the former lends the city his equipment for the duration, and should be in duplicate. The second is the inter-municipal agreement for the license application under district organization, as adapted from the form used in the State of Massachusetts.

AGREEMENT

I, ..., residing at ..... in the city of ....., ...;
being the unconditional owner of the radio equipment described in detail below, do hereby convey all my right, title and interest to such equipment to the City of Berkfield, Faryland, for use solely in the War Emergency Radio Service; PROVIDED THAT it shall be returned to me by the City at the end of the present war.

List of Equipment:

.....
.....
.....

Dated this ..... day of ....., 194....

(Signed) .....

Witnessed by: .....

By its signed acceptance of this document the City of Berkfield acknowledges receipt of the equipment in good condition and pledges that at the end of the present war it will be returned to the above-named individual, his heirs or assigns, the City releasing all claims, right, title and interest thereto.

Accepted this ..... day of ....., 194....

City of Berkfield, Faryland.

By .....

SEAL

WAR EMERGENCY RADIO SERVICE
INTER-MUNICIPAL AGREEMENT

IT IS AGREED THAT the City of ....., hereinafter known as the licensee, will apply to the Federal Communications Commission for permission to construct and operate radio stations in the War Emergency Radio Service in the area known as .....,

AND THAT the City of ....., hereinafter known as the sub-licensee, lies within said area and wishes to participate in a single War Emergency Radio Service network serving that area;

IT IS HEREBY AGREED by both parties:

THAT all radio equipment installed by the sub-licensee for the above purpose shall be under the direction and control of the licensee;

AND THAT the Radio Aide agreed upon by the licensee shall administer the operation of and be responsible to the licensee for all equipment in said network;

AND THAT during the existence of this agreement, the sub-licensee will not request individual authority for a War Emergency Radio Service station license;

AND THAT this agreement may be terminated at will by either of the parties concerned but that notification shall be given to the Federal Communications Commission sixty days prior to the termination of this agreement by either of the parties.

IN WITNESS WHEREOF, we hereunto set our hands this ..... day of ..... 19 .

The City of ..... The City of .....

By ..... By .....

Title ..... Title .....

State of .....

County of .....

SUBSCRIBED and sworn to before me this ..... day of ..... 19 .

Notary Public .....

My commission expires .....

State Guard Stations

Reference to the regulations at the end of this chapter will indicate that much that has been said in the previous section concerning civilian defense stations applies also to state guard stations, but is presented from a civilian defense standpoint because specific information on state guard organization is lacking. This,

of course, is because a state guard is a semi-military organization, and therefore many of its functions are not public information.

In state guard work the "communications officer" performs the same function for the state guard licensee that the radio aide performs for the civilian defense licensee, and applications are executed on the same three forms with practically the same set of supplementary statements necessary. One of the chief differences is that the license is issued to the state guard of an entire state, and must be signed by the commanding officer for that state. The original license contains authorization only for those units of the state guard which are prepared to take part in SG-WERS communication. Additional units can be included in the license later only by modification of the station license. The fact that an individual is a member of a state guard organization which is licensed for SG-WERS *does not* automatically authorize him to operate station units of that licensee simply at the command of his commanding officer. He must possess the necessary eligibility for a WERS operator's permit and must apply for such a permit on FCC Form 457, which form must be signed by the communications officer *of the licensee* and not by the communications officer of a local state guard unit; however, other authority to supervise the operation of local units may be delegated to local communications officers by the state communications officer.

All SG-WERS license applications must be forwarded through the Army Service Command of the area in which the state is included. After approval, the application is forwarded to FCC and the license issued if the application is found to be in order.

Note that the scope of service of state guard stations differs slightly from that allowed civilian defense stations, and that tests are allowed at any time of the day or night provided that such tests do not exceed four hours per week. Amateurs desiring more details of this service should communicate with the communications officer at the headquarters of their local state guard unit.

¶ Civil Air Patrol Stations

Civil Air Patrol stations come under the same general rules and regulations as civilian defense and State Guard stations, and many of the specific rules for CAP-WERS stations are similar to those for CD- and SG-WERS.

CAP-WERS licenses are issued only to the duly appointed wing commanders of the Civil Air Patrol. A wing of the CAP usually covers an entire state, and under the wing commander is a wing communications officer similar to the radio aide in CD-WERS, who has the duties of preparing the license application and supervising the operation of all units of the wing. A wing is subdivided into "groups" and "squadrons," each of which has its commanding officer and its communications officer. Some wings, in particular those of the smaller states, have omitted the group organization and have only squadron units under the wing.

CAP-WERS organization goes from squadron to group to wing. A squadron of the CAP which wishes to participate in CAP-WERS should have application data prepared by its communications officer. These data then are approved by the squadron commander and forwarded to group headquarters. The group communications officer collects all such data, has them approved by the group commander, and forwards them to wing headquarters. The wing communications officer then prepares the license application much as the radio aide prepares a CD-WERS application. This application, when completed, must be signed by the wing commander, who is the licensee, and forwarded to the national headquarters of CAP. There it is perused by the national communications officer, sent back to the wing for correction if necessary, and finally forwarded to FCC for issuance of the license.

Note that, as in both other WERS categories, individuals who operate CAP-WERS units are in no way relieved from the necessity of possessing a WERS operator's permit. There is no limit to the amount of testing which can be conducted by CAP-WERS licensees, except that it shall not exceed the minimum necessary to ensure the availability of reliable communications. Amateurs interested in this service should get in touch with their local CAP squadron communications officer, or with the national CAP communications officer at CAP national headquarters, Washington, D. C.

¶ Equipment

In the WERS regulations, power input to the transmitter r.f. output stage is limited to 25 watts or less, and the frequency bands available are each divided into two sections having differing frequency tolerances. The carrier frequency tolerance is set at 0.1 per cent in the lower half of the band and at 0.3 per cent in the upper half. With the possible exception of a few localities, where some 224-Mc. equipment may be available, all WERS communication is carried on in the 112-Mc. band because it is possible to operate with standard receiving tubes and ordinary circuit components at these frequencies. Only 112-Mc. equipment is discussed in this chapter, therefore.

In addition to the transmitters and receivers necessary for actual communication, provision must be made for frequency measurement. This is not necessary at every station, since it can be taken care of by the main station at each subcontrol center.

Measurements on representative types of amateur 112-Mc. equipment have shown that the stability requirement of 0.1 per cent can be readily met by any reasonably well-built oscillator-type transmitter, adjusted to frequency and thereafter left with its tuning controls untouched during an operating period. If the

transmitter can be crystal-controlled, so much the better, but crystal control is not at all a necessity. However, as an operating convenience crystal control is quite desirable, particularly at control stations, since two or more frequencies can be made available in the same transmitter simply by providing the necessary crystals and a switch. It should be possible to use any of the frequencies, provided the maximum frequency separation is not more than 2 Mc. or so, without touching the tuning controls. If a crystal-controlled transmitter is not available, it is desirable to provide separate transmitters for each frequency to be used, if the amount of apparatus on hand permits. With only one transmitter there exists the important practical difficulty of returning to exactly the same frequency each time a shift is made.

Each subcontrol center should have one receiver which can be used for continuous monitoring of the district warning center control station. This is a necessity as a means of securing immediate radio silence when so ordered by the Army. A second receiver should be available for communication within the local network. Although it is desirable, as a rule, to have separate transmitters and receivers rather than transceivers at the control station, the second receiver in the control station may be in a transceiver which is used, in the "transmit" position, as the transmitter for communication with the sector wardens.

One transmitter and one receiver (the two may be combined in a transceiver) should suffice for the sector wardens' stations (field stations). If a separate frequency channel is maintained for portable-mobile apparatus it will be necessary for the operators of the sector stations to monitor both this frequency and that on which they are to communicate with the subcontrol center. In many ways a transceiver, with its automatic tuning of both transmitter and receiver to the same frequency, will be simpler to operate in this type of service than separate transmitter and receiver units, unless two transmitters can be made available to take care of both frequencies. Where a transceiver is used, the two tuning spots should be plainly marked on the dial. In many networks both functions can be carried out on one frequency, thus simplifying operation.

Mobile apparatus, which is required to work only on one frequency, can be of almost any type, either a transceiver or separate transmitter and receiver units.

Transceivers, particularly the dry-battery-operated units, cannot be depended upon to maintain carrier stability within the 0.1 per cent necessary to meet the requirements for operation in the low-frequency half of the band. The more powerful transceivers, for operation on a.c. or from storage-battery supply, are fairly stable as transmitters, but if the receiver has to be tuned to two or more frequencies the unavoidable inaccuracies in resetting the dial preclude the possibility that the frequency can be reliably maintained within 0.1 per cent. It is better to confine the use of transceivers to the high-frequency half of the band; the average unit of this type is readily capable of meeting the requirement of 0.3 per cent.

It should hardly need saying that all equipment must be capable of operating from sources of power supply independent of the a.c. mains, and must in fact have such power supply

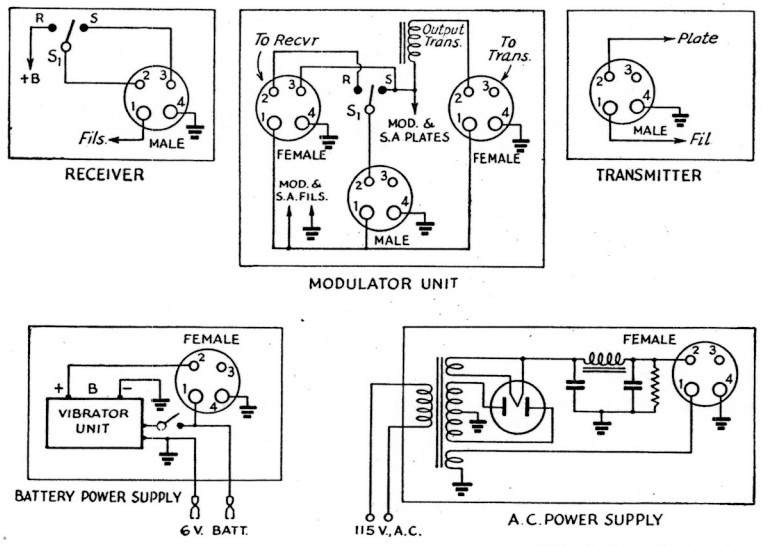

Fig. 1604 — Interconnection and switching system for various units of the emergency station. Connections are made by means of cables provided with a plug at one end and a socket at the other. Four conductors are required in the cables; to minimize filament voltage drop, the type of cable having two heavy conductors should be used. Alternatively, pairs of wires in an ordinary six-wire cable can be connected in parallel to lower the resistance. It is convenient to make the cables about three feet long. The switch in the battery power-supply unit makes it possible to keep the tube filaments hot when the station is not required to be on the air, saving the battery power normally consumed in the vibrator unit.

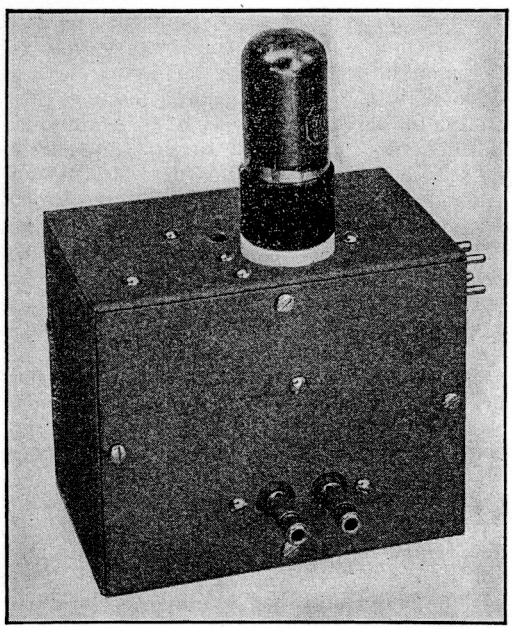

Fig. 1605 — A stable 112-Mc. transmitter. The oscillator is built in a small metal box, with only the tube, power plug and antenna posts on the outside. The small hole on the top beside the tube is for adjustment of the excitation condenser. The grommeted hole on the left side is for screw-driver adjustment of the tank condenser.

available. It is not likely that a.c. power would remain on tap throughout an emergency. Nevertheless, the emergency power can be conserved for the time when it is needed if the stations are capable of operating from either a.c. or emergency power supplies. It is helpful therefore to equip the fixed stations with alternative power supplies. Various types of emergency power-supply systems are considered later in this chapter.

Since many radio components now are unobtainable, the apparatus designs in this chapter should, in the majority of cases, be considered as a source of circuit and constructional ideas rather than as items to be duplicated. Fortunately 112-Mc. equipment suitable for WERS work is quite simple, and it is readily possible to adapt an idea used in one piece of equipment to a different circuit layout. In view of the nature of the service, it is well to keep in mind a few general principles:

1) The apparatus must be simple to operate. Much of the actual operation must be done by those who have never built radio equipment or operated anything more complicated than a broadcast receiver. The number of controls should be reduced to the minimum necessary to perform the *operating* functions. There is no necessity, for instance, for using tuning dials on a transmitter intended to be operated on a fixed frequency. If such apparatus can be enclosed so that only the on-off and change-over controls are accessible, there is that much less chance that the equipment will be misadjusted accidentally or otherwise.

2) Keep in mind the possibility that replacement of some components may be necessary. If, for example, a choice of tubes exists, take the type which has the best chance of being available at short notice, even though it may not actually be the best type for the purpose. Stick to the more popular types of tubes used in broadcast receivers and follow the same policy with respect to other components, such as filter and by-pass condensers which may eventually require replacement.

3) Build the equipment, including the power supply, so that it can be moved to a new location without difficulty and can be set up for operation again with a minimum of delay. While this does not mean that "suitcase" construction is necessary, it does call for construction of a type which will stand the knocks and jars of transportation. It also means that it is a good idea to enclose the equipment so that wiring cannot be damaged or projecting components knocked loose.

4) Insofar as equipment permits use uniform control methods for all installations, so that an operator who fills in at a station to which he is not normally assigned can work effectively with a minimum of special instruction.

5) Standardize on a system of making connections, particularly between the power supply and the r.f. and audio parts of the assembly, so that interchangeable units can be substituted in case of failure. Remember that it may be necessary to assemble a station in a hurry at a point not previously equipped. Do not neglect such apparently minor considerations

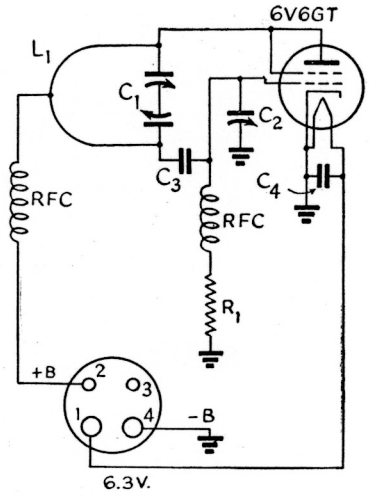

Fig. 1606 — Stable 112-Mc. transmitter circuit diagram.
C_1 — 100 $\mu\mu$fd. per section (Hammarlund MCD-100-S or Millen 24100).
C_2 — 3–30-$\mu\mu$fd. padder (National M-30, Millen 28030, Hammarlund MEX, etc.).
C_3 — 50-$\mu\mu$fd. midget mica.
C_4 — 250-$\mu\mu$fd. midget mica.
R_1 — 15,000 ohms, ½-watt.
L_1 — See Fig. 1608.
RFC — 1¼-inch winding of No. 28 d.s.c. on ¼-inch polystyrene rod, no spacing between turns.

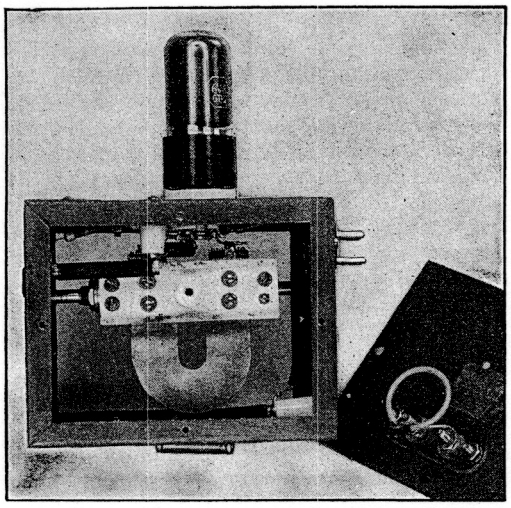

Fig. 1607 — Looking into the 112-Mc. transmitter from the antenna-terminal side. The grid choke is in the upper left corner, with its "hot" end supported by a small ceramic stand-off insulator. The plate choke is partly visible in the lower right corner; it is mounted endwise, also on a ceramic stand-off insulator. The one-turn antenna coil may be seen mounted on the antenna terminals on the side plate, shown here removed from the box.

as connections for microphones and headsets. With the possibility of using two or three different kinds of plugs and jacks, or even pin jacks, it would be well to standardize on one type at the outset, so that any microphone or headset will fit any transmitter or receiver.

A standardized connection scheme is suggested in Fig. 1604. Its application to an equipment assembly consisting of separate units — transmitter (oscillator), modulator, receiver, a.c. power supply, storage battery power supply — is indicated. Provision is made for a unit containing a 0–100 ma. d.c. milliammeter for testing and measuring purposes, so that a single instrument can be made to serve for a number of stations. In cases where the transmitter and modulator, for instance, are combined in one unit, the general scheme of connections readily can be carried out. Thus, if all power-supply units in the system are arranged to have the same output connections and the same output voltage ratings, within reasonable limits, any one of the units available can be used at any station in the network.

The system is based on the use of four-conductor cables, with four-prong sockets and plugs for quick and positive interconnection. Each cable has a plug at one end and a socket at the other. In the event that suitable cable-type connectors are not available, ordinary four-prong sockets and old tube bases readily can be adapted to the purpose. On the various units of the station, a socket (female) is used for *outgoing* power and a plug (male) for *incoming* power; thus there is no danger of shock nor any possibility of making wrong connections. Suggested cable plug and socket prong connections are indicated on the diagram.

When the equipment is built on the unit plan a cable runs from the power supply to the modulator, where the d.c. power is distributed to the transmitter and receiver. The modulator is provided with two outgoing sockets; the "B"+ lead to the transmitter socket picks up the modulator audio output and carries it along with the d.c. to the transmitter when the cable is attached. On the receiver side, the fourth prong is used to provide duplicate send-receive switching at both modulator and receiver. The connections to the single-pole double-throw switches are shown in the appropriate units. With either switch in the "receive" position, the other may be used to switch the plate power back and forth. The cables simply carry through connections from plug prongs to corresponding socket prongs; all the cables are identical.

A switch should be provided in the modulator unit for the purpose of cutting off the microphone battery when the transmitter is not in use.

The meter unit has a plug and a short cable with a socket connector at its end. This unit is useful, although not essential, in regular operation, and is needed for initial transmitter checking and adjustment. By its use metering facilities are made available quickly and simply, yet the meter itself is not tied up permanently in the equipment.

The same connection scheme can be used in a mobile installation, with the addition of suitable control and extension wiring to fit individual layouts. This will facilitate removal or installation of the equipment, or any part of it, when necessary. The basic wiring, antennas, etc., can be permanently installed in

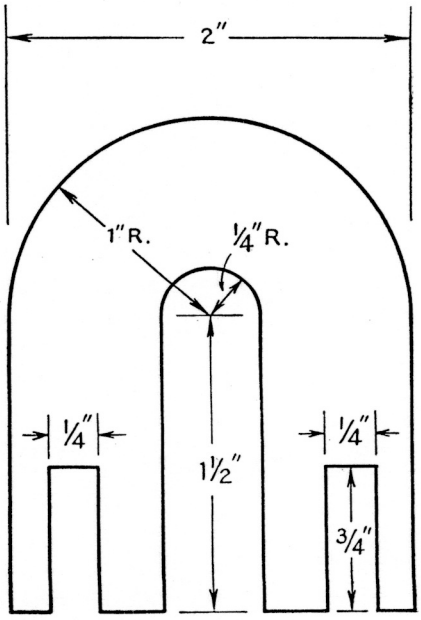

Fig. 1608 — Tank-inductance construction. This layout drawing is full-size and may be used as a template.

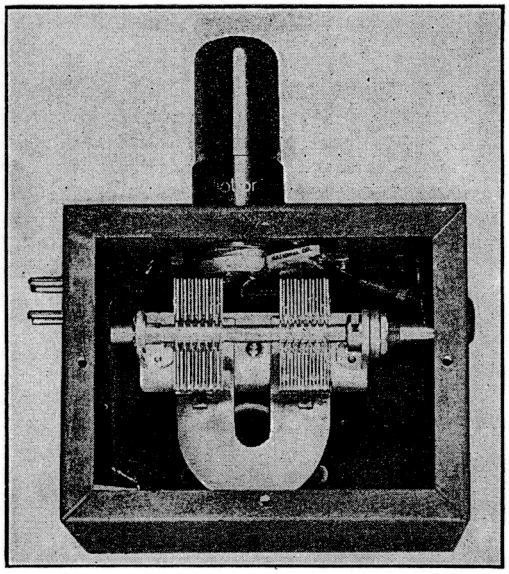

Fig. 1609 — Inside the oscillator unit. The tube socket is placed so that the plate prong is directly above the left-hand tank condenser stator terminal, making an extremely short plate connection. The grid condenser connects the grid prong and right-hand stator terminal.

the car, spare cables being provided for external use of the apparatus.

The unit plan illustrated by Fig. 1604 has a number of advantages. Should a particular unit develop trouble in operation, a spare can be substituted with negligible loss of time and the defective unit may be serviced without interrupting communication. Extra units can be built in anticipation of such a contingency with a probable saving in time, effort and components as compared to the alternative of providing a spare transmitter-modulator or complete transmitter-receiver, since with this system a few spare units should take care of the replacement requirements of a fair-sized network; it is unlikely that all parts of a station would fail simultaneously. One drawback is that it is somewhat more inconvenient to set up a multi-unit system than to place one integral station in operation, and a second is that it involves close coördination in design — possible when materials can be secured readily, but having its difficulties under present conditions. Nevertheless, the standardized connection idea can be applied with distinct benefits. The actual details can be based on the requirements of a particular network and the use of materials on hand.

¶ Unit-Style Transmitter and Modulators

The 112-Mc. oscillator shown in Fig. 1605 is designed to minimize frequency modulation, and to that end is constructed around a high-C tank circuit of somewhat unconventional design. Reduction of frequency modulation is a step toward minimizing interference, since frequency modulation broadens the signal. The circuit requires a minimum of parts, although the tank condenser, C_1, may be difficult to obtain except from salvage stock.

The tank circuit consists of the balanced condenser, C_1, and the U-shaped metal piece whose dimensions are given in Fig. 1608. This "coil" is designed to have as much surface area as possible, thereby reducing resistance and losses, and also to provide the lowest possible contact resistance where it connects to the condenser. The ends of the U-shaped inductance fit under the stator-plate assemblies, which in the types of condensers specified are provided with flat holding plates to which the individual condenser plates are soldered. The slots in the ends of the U allow the inductance to be slid in and out to adjust the L/C ratio over a small range. To assemble the tank circuit the condenser must be dismounted from the base, and washers about the same thickness as the metal of the tank coil must be inserted between the base and the rotor supports. This raises the rotor to correspond to the increased height of the stators. It is not difficult to replace the stators so that the plate spacing is uniform. If the inductance is made exactly as specified, the slotted ends should come within about 1/16th inch of the far side of the base to give the proper frequency range.

The inductance shown in the photographs was cut from a small piece of scrap sheet copper somewhat less than 1/16th inch thick. Aluminum also works well. The metal should have low resistance, although its thickness is of no importance except for mechanical stiffness.

The oscillator is assembled in a $3 \times 4 \times 5$-inch metal box as shown in Figs. 1607 and 1609. The various views should make the construction obvious. Chief considerations are to keep the grid and plate leads short, to which end the tube socket is mounted directly above the plate section of the tank condenser, with

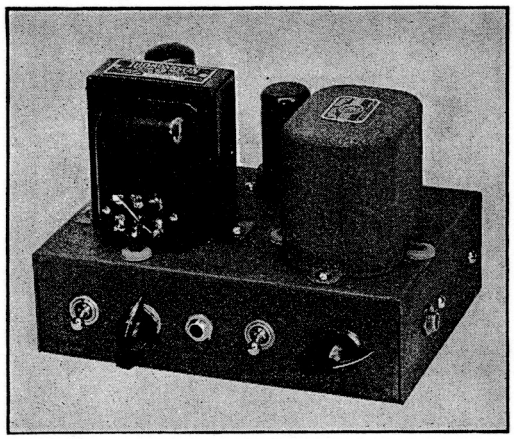

Fig. 1610 — The Class-B modulator unit. The output transformer is at the left, the driver transformer at the right. Controls along the front are send-receive switch, 'phone-c.w. switch, key jack, microphone battery switch, and gain control. The microphone jack is on the right-hand edge, around the corner from the gain control.

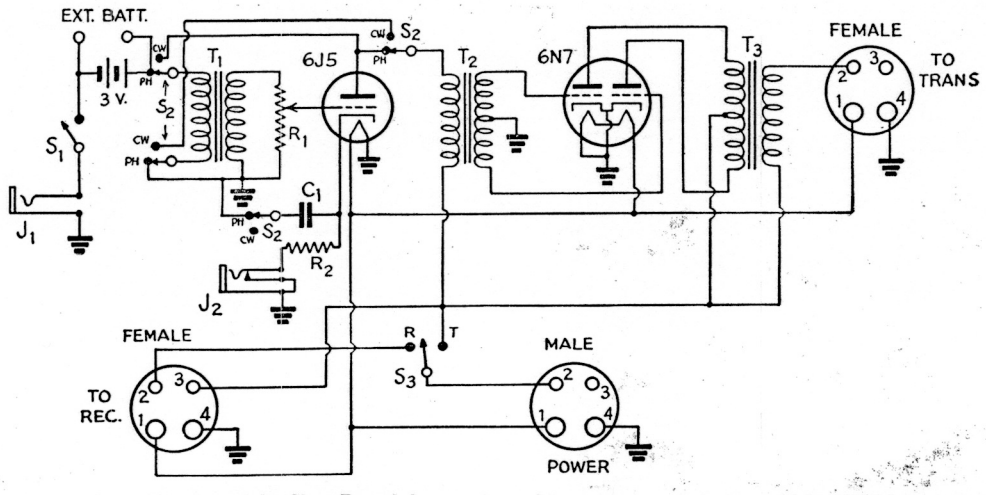

Fig. 1611 — Circuit diagram of the Class-B modulator unit used in connection with the 112-Mc. WERS transmitter.

C_1 — 10-μfd. 50-volt electrolytic.
R_1 — 0.5-megohm volume control.
R_2 — 2000 ohms, 1-watt.
T_1 — Single-button microphone-to-grid transformer (Stancor A-4706 or equivalent).
T_2 — Class-B driver transformer, (UTC S8 or equivalent).
T_3 — Class-B output transformer, 6N7 to 5000–6000 ohms (Thordarson T-19M13 or equivalent).
J_1 — Open-circuit jack.
J_2 — Closed-circuit jack.
S_1 — S.p.s.t. toggle switch.
S_2 — 4-p.d.t. rotary switch (Yaxley 3242J or equivalent).
S_3 — S.p.d.t. toggle switch.

the latter just far enough below the plate prong to allow room for soldering a connection; and to keep the tank inductance as near the center of the box as possible so its flat sides will be well spaced from the steel side plates of the box. This spacing is accomplished by mounting the condenser on a 1-inch ceramic pillar fastened by a machine screw at the center hole in the base. The other end of the pillar is fastened to the side of the case. On the same side directly below is the r.f. output terminal assembly. The antenna pick-up coil is a 1-inch diameter single turn of No. 14 wire covered with spaghetti tubing. The antenna coupling is adjusted by bending the supporting leads for the pick-up coil to bring the turn closer to or farther away from the tank inductance. The coupling is ordinarily rather close, physically, because of the peculiar shape of the field about a tank inductance of this construction.

The tank condenser is screwdriver-adjusted, a slot being sawed in the end of the shaft. The rotor shaft of the condenser cannot be grounded since the circuit is not actually balanced; grounding the rotor changes the excitation and reduces the output to negligible proportions. The capacity between the rotor and the case also should be kept as low as possible.

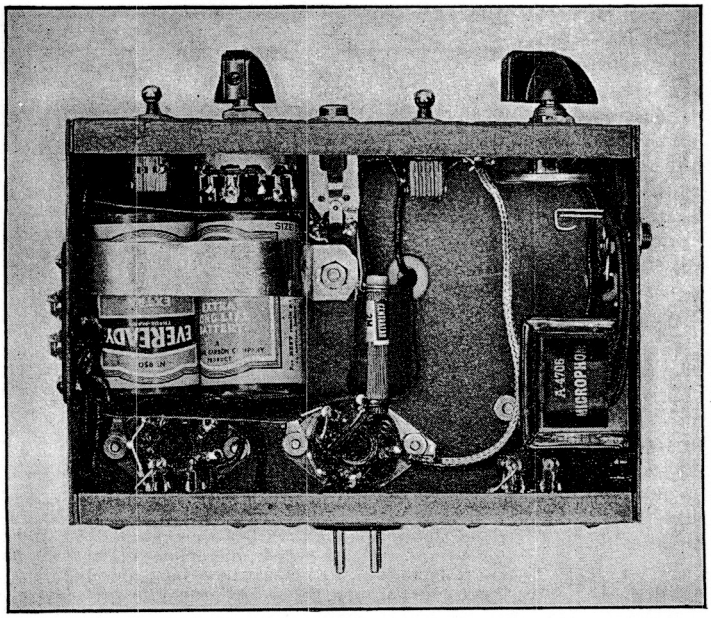

Fig. 1612 — Underneath the modulator chassis. The microphone transformer is mounted on the chassis edge alongside the microphone jack. The power plug and the two outgoing power sockets for the transmitter and receiver are mounted on the rear edge of the chassis (bottom edge in this view). A terminal strip for connecting an external microphone battery is located on the left-hand edge. The flashlight cell microphone battery is held in place by a metal strip; the cells are protected from accidental short-circuit by a piece of thin fiber or cardboard which is bent in the shape of a U to cover the terminals.

The plate voltage is fed to the tank circuit near the center of the U. The lead from the cathode to ground should be as short as possible and made of heavy wire, likewise the lead from the grounded filament pin. The same connection may be used for both, and also for the No. 1 pin. The excitation condenser, C_2, should be mounted so as to keep it as far as possible from the plate section of the tank condenser.

Oscillator adjustment — The adjustments to be made are to determine whether the frequency range is correct and to set the output coupling and excitation for maximum stability and output. The tank inductance will be properly adjusted when it is set (by sliding the ends in and out under the stator-plate assemblies) so that with the condenser at maximum capacity the frequency is between 111 and 112 megacycles. The frequency may be measured by using Lecher wires. The output may be judged by connecting a dial light (150-ma. size or larger) to the output terminals, whereupon varying the coupling and adjusting C_2 will readily show the optimum settings. The stability is more difficult to check unless a 112-Mc. superheterodyne receiver is available. However, the maximum stability is obtained when the capacity of C_2 is set at the largest value which will give good output, and it is advisable to adjust C_2 by first increasing its capacity to the point where the output drops off and then decreasing it just to the point where the output comes back to normal. As the capacity is decreased still more the output should decrease somewhat.

With normal operation the plate current, with load, should be between 50 and 60 ma. The exact value will vary somewhat with individual tubes, and if it tends to be outside these limits it may be regulated by using a slightly different value of grid leak, larger values giving less plate current and vice versa. The current will drop a few ma. when the load is removed.

To adjust the coupling for working into a 600-ohm line, a 1-watt resistor of 500 or 600 ohms may be used as a load. To indicate current through the resistor a 60-ma. dial light may be connected in series with it. A 150-ma. lamp also may be used, but is a less convenient indicator since it glows only dimly. The coupling should be adjusted for maximum current.

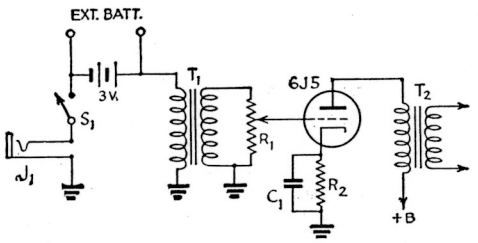

Fig. 1613 — Alternative microphone input circuit for eliminating the tone-modulation feature incorporated in the modulator circuits of Figs. 1611 and 1615. Circuit values correspond to those given in Figs. 1611 and 1615.

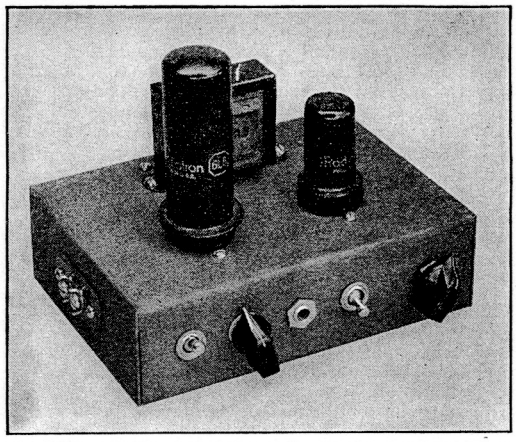

Fig. 1614 — A Class-A 6L6 choke-coupled modulator, using a minimum of transformers. The controls along the front are, left to right, the send-receive switch, 'phone-c.w. switch, key jack, microphone battery switch, and gain control. Terminals for external microphone battery are on the left edge. The microphone jack, not visible, is mounted on the right-hand edge of the chassis.

Class-B modulator — Except for the provision for modulated c.w. operation, which may be omitted by substituting the alternative input circuit of Fig. 1613, the modulator is a conventional Class-B arrangement, using a 6N7 driven by a 6J5. Class-B is used because of its higher plate efficiency and relatively low idling plate current. The oscillator load will be between 5000 and 6000 ohms, depending upon the plate current, and it will be sufficient to take the nearest value furnished by the output transformer, using a plate-to-plate load of 8000 ohms for the 6N7. There is ample gain with the single speech amplifier stage for ordinary single-button microphones operated from a 3-volt battery.

Power input and output connections conform to the standards previously described. To give tone modulation for code transmission, the speech amplifier tube is made to oscillate by connecting the primary of the microphone transformer as a tickler in series with the plate circuit. A four-pole double-throw switch is necessary to change from 'phone to c.w., two poles being used to transfer the primary of T_1, a third to close the plate circuit for 'phone, and the fourth to disconnect the cathode condenser for tone modulation. This last is essential for good keying (the speech amplifier tube is keyed in the cathode circuit). The c.w. tone pitch depends upon the value of the cathode resistor and the volume control setting, but with several microphone transformers tested falls in the optimum region (500–1000 cycles) with a 2000-ohm cathode resistor.

A separate switch is provided to open the microphone battery circuit whenever desired. The battery would normally be left on while receiving when communication is being carried on, but during stand-by periods it would be desirable to switch off the microphone current

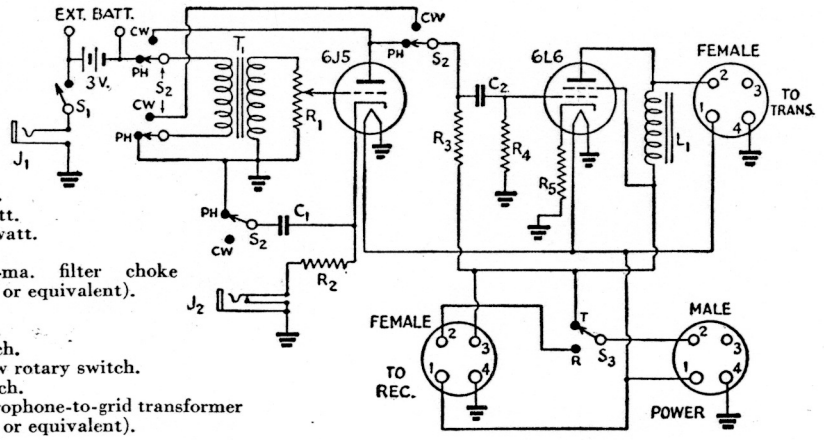

Fig. 1615 — Circuit diagram of the alternative choke-coupled 6L6 Class-A modulator.
C_1 — 10-μfd. 50-volt electrolytic.
C_2 — 0.01-μfd. paper.
R_1 — 0.5-megohm volume control.
R_2 — 1500 ohms, 1-watt.
R_3 — 50,000 ohms, 1-watt.
R_4 — 0.25 megohm, ½ watt.
R_5 — 500 ohms, 1-watt.
L_1 — 10–15-henry 100-ma. filter choke (Stancor C-2303 or equivalent).
J_1 — Open-circuit jack.
J_2 — Closed-circuit jack.
S_1 — S.p.s.t. toggle switch.
S_2 — 4-pole double-throw rotary switch.
S_3 — S.p.d.t. toggle switch.
T_1 — Single-button microphone-to-grid transformer (Stancor A-4706 or equivalent).

to prolong battery life. The same effect can be secured by pulling the microphone plug out of the jack, but the switch is more convenient. A battery of two flashlight cells connected in series is made a permanent part of the unit, since there is sufficient mounting room underneath the chassis, but additional terminals are provided for an external battery should the internal one wear out during an emergency. To use an external battery it is necessary to disconnect one of the leads to the self-contained battery unit.

The microphone jack is mounted on the side of the chassis, so the microphone plug and cord will be out of the way of the controls on the front. The key jack is on the front. Since the modulator unit is small (the chassis is 5 × 7 × 2 inches) the send-receive switch is placed at the end, where it is easiest to handle.

The plate current taken by the modulator and speech amplifier tubes is in the vicinity of 35 ma. with no excitation. When the r.f. oscillator is added, the current drain is just under 100 ma. With 100 per cent voice modulation, the maximum current is 110 to 115 ma.

Class-A modulator — While the Class-B type of modulator is to be preferred because of its higher audio-frequency power output for a given plate power input, Class-B transformers are practically unobtainable at the present time. Therefore, unless suitable transformers can be salvaged from old equipment, the probability is that a Class-A modulator will have to be used. Such a modulator, using a 6L6 with a preceding 6J5 as a speech amplifier, is shown in Fig. 1614. Provision for tone modulation also is incorporated in this unit, and again may be omitted by using the alternative speech amplifier connections of Fig. 1613.

Any filter choke capable of maintaining an inductance of 10 henrys or more with 100 ma. d.c. through its winding will serve as a coupling choke for the modulator. The higher the inductance the better the low-frequency response, but since "quality" is not a consideration so long as completely understandable speech is transmitted it is unnecessary to use higher inductance than is found in the ordinary 100-ma. choke.

To keep the total modulator plate current down to 40 or 45 ma. and thus avoid overloading the vibrator power supply (which delivers 100 ma. at 300 volts) when the modulator and r.f. oscillator are operated simultaneously, the cathode resistor is higher than is normal for a Class-A 6L6 at this plate voltage.

The plate-voltage switching and the input and output socket and plug arrangement are identical with the Class-B unit already described.

Controls and power-supply outlets are arranged similarly to the controls on the Class-B modulator. The chassis is the same size, 5 × 7 × 2 inches. There are no especially critical points involved in wiring, and practically any parts layout will be satisfactory. The two-cell microphone battery is

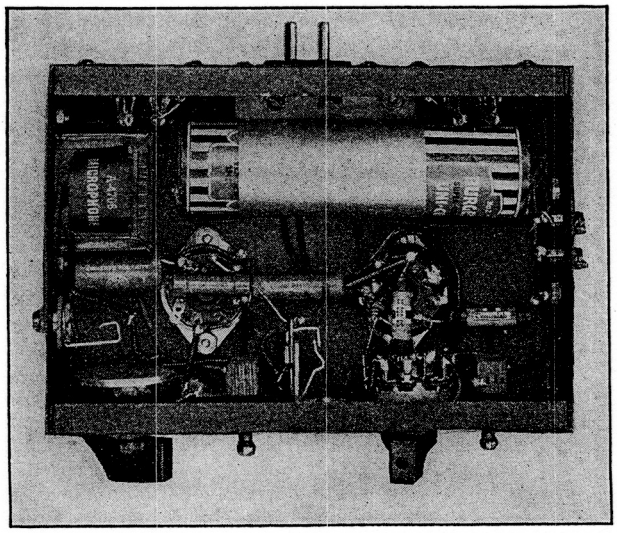

Fig. 1616 — Underneath view of the 6J5-6L6 Class-A modulator unit. Parts are placed wherever found most convenient in wiring.

held in place by a bracket fitting around the battery, fastened to the chassis by the machine screws which mount the choke.

¶ Superregenerative Receivers

By far the simplest type of receiver for very high-frequencies is the superregenerator, long a favorite in amateur work. It provides good sensitivity with a small number of tubes and very elementary circuits. Its disadvantages are lack of selectivity and the fact that, since the detector is an oscillator coupled to an antenna, it will radiate a signal which may cause interference to other receivers. To some extent the lack of selectivity is advantageous, since it increases the chances of hearing a call even though the transmitter and receiver may have drifted somewhat in frequency since the last contact was established. The radiation question is more serious. The avenue of approach in the reduction of radiation is to use every means possible, in the way of building as good an oscillator circuit as the circumstances will permit, to operate the detector at the lowest plate voltage that will give satisfactory operation. A means of providing regeneration control is therefore essential in any simple superregenerative receiver. Should existing equipment not have such a control, it is urged that one be installed.

The receivers to be described have been designed to use the commoner types of receiving tubes. An on-off switch for controlling the transmitter by the standardized connection system described earlier (Fig. 1604) is included in each unit. Both receivers are designed to operate from a 300-volt power supply, a dropping resistor being included for that purpose. They will also work well with lower-voltage supplies.

A simple superregenerative receiver is shown in Figs. 1617 to 1620. As shown in the wiring diagram, Fig. 1619, a 6J5 superregenerative detector is followed by resistance-coupled 6J5 and 6F6 audio stages. The circuit is fairly conventional except for the inductive tuning of the detector and possibly the use of resistance coupling throughout.

The receiver is built in a 3 × 4 × 5-inch metal box, with a 3 × 4-inch face serving as the panel. The panel controls are the tuning knob and the regeneration control, and the headphone jack is also mounted on the panel. The power cable plug is mounted at the rear of the box, as are the speaker terminals. The on-off switch and the antenna terminals are mounted on the left-hand side of the box.

The detector trimmer condenser, C_1, is fastened to the upper face of the box and can be adjusted from the top of the receiver. The quench-frequency r.f. choke, RFC_2, is supported off the under side of the upper face of the box by a long screw, with a brass sleeve over the screw furnishing sufficient spacing from the box. The r.f. choke is essential because the resistance-coupled amplifiers show but slight attenuation of the quench frequency,

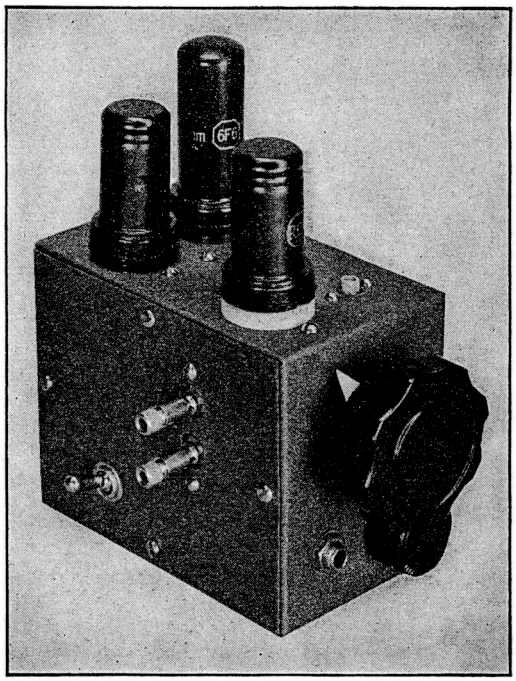

Fig. 1617 — **The compact 112-Mc. receiver is built in a 3 × 4 × 5-inch metal box. Note the detector trimming condenser adjustment to the right of the 6J5 detector (front tube). The tuning control, headphone jack and regeneration control are on the front panel, the on-off switch and antenna binding posts on the side.**

and the quench voltage will overload the output audio tube at rather low signal levels. When transformer coupling is used between the detector and first audio stage the transformer keeps most of the quench voltage out of the following stages and consequently the quench-frequency choke is not always necessary.

The wiring of the unit requires only brief mention. A soldering lug at each socket furnishes a convenient ground for the components of that stage. All condensers and resistors are mounted by fastening directly to the sockets and other terminals, with the exception of the coupling condenser, C_6, one side of which must be run down to the headphone jack through an extra length of wire. The wires running to the toggle switch should be made of extra-length flexible wire so that the side of the box can be removed without unsoldering the wires to the switch. All wiring should be completed before L_1 and L_2 are put in place.

The detector coil is made by winding the wire around a ½-inch diameter drill or dowel as a former. The coil is then removed and the ends trimmed and bent until the coil can be soldered in place in proper alignment with the panel bushing used to support the tuning loop shaft. The plate lead of the tube socket is connected to the rotor of the trimmer condenser by means of a short length of wire, and the coil L_1 is connected to the center of this wire and to the stator connection of the condenser. A length of ¼-inch shaft pushed through the shaft bearing

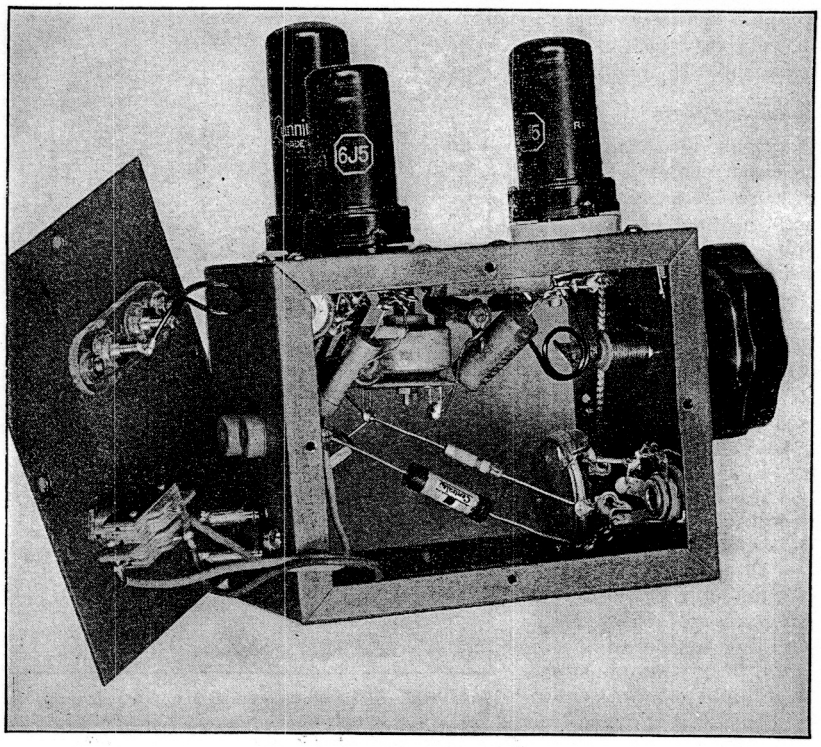

Fig. 1618 — Inside the small receiver, this left-hand view shows how the tuning-loop assembly and the send-receive switch are mounted on one of the side panels, together with the placement of some of the parts not visible in the other views. The power-supply plug and the loudspeaker binding posts may be seen at the rear of the chassis.

will serve as a guide in soldering the coil in place, and the axis of the coil should make an angle of 45 degrees with the shaft.

The inductive tuning loop is a small copper washer cemented to the end of a ¼-inch shaft of insulating material (Lucite or bakelite). The end of the shaft is cut at an angle of 45 degrees to mount the washer at 45 degrees with respect to the axis of the shaft and, consequently, 180-degree rotation of the shaft turns the copper washer from a position coaxial with the coil to one at right angles to it. The copper washer, acting as a single shorted turn, decreases the effective inductance of the coil as it becomes more closely coupled and consequently tunes the system. The copper washer is made by drilling a ⅛-inch hole in a small piece of sheet copper and then cutting around the hole to form a washer of 7/16-inch outside diameter. The washer is fastened to the angled face of the shaft by Duco cement. Because the copper washer is larger than the shaft, the shaft must be pushed through the panel bearing from the inside of the box, but this can be done easily by loosening the panel bearing while sliding the shaft through. A fiber washer should be placed on the shaft before it is pushed through the panel bearing, and later cemented

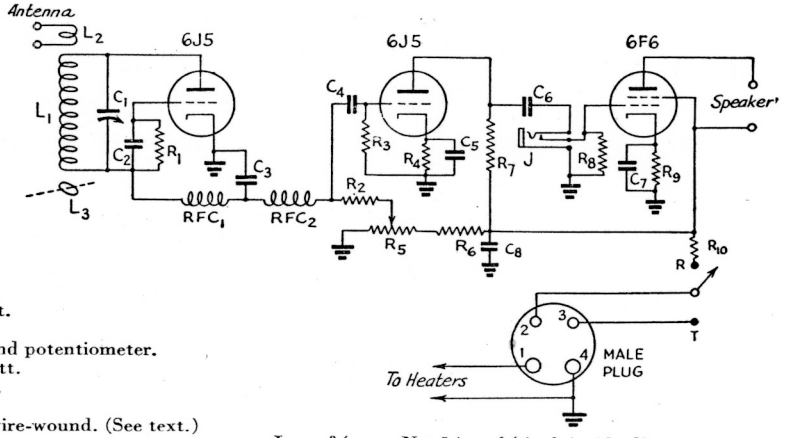

Fig. 1619 — Circuit diagram of the compact 112-Mc. superregen receiver.

C_1 — 25-$\mu\mu$fd. air trimmer (Hammarlund APC-25).
C_2 — 50-$\mu\mu$fd. midget mica.
C_3, C_4, C_6 — 0.01-μfd. 600-volt paper.
C_5, C_7 — 10-μfd. 25-volt electrolytic.
C_8 — 8-μfd. 450-volt electrolytic.
R_1 — 5 megohms, ½ watt.
R_2 — 25,000 ohms, ½ watt.
R_3 — 0.25 megohms, ½ watt.
R_4 — 1500 ohms, ½ watt.
R_5 — 50,000-ohms wire-wound potentiometer.
R_6, R_7 — 50,000 ohms, 1 watt.
R_8 — 0.1 megohms, ½ watt.
R_9 — 500 ohms, 1 watt.
R_{10} — 2000 ohms, 10-watt wire-wound. (See text.)
J — Closed-circuit jack.
S_1 — S.p.d.t. toggle.
L_1 — 1⅔ turns No. 14 e., ½-inch inside diameter, spaced ⅔ wire diameter.
L_2 — ¾ turn No. 14 e., ½-inch inside diameter.
L_3 — Tuning loop. See text.
RFC_1 — V.h.f. choke (Ohmite Z-1).
RFC_2 — 80-mh. r.f. choke (Meissner 19-2709).

to the shaft to serve as a collar to prevent the shaft's pulling through the bearing.

It is easier to check the performance of the receiver before the tuning loop is added, and with the large trimmer condenser used there should be no difficulty in finding the 112-Mc. band. The trimmer will be set at about two-thirds capacity if the coil is right. The detector should go into the hiss condition when the regeneration control is advanced not more than two-thirds of its travel. It is well to try different values of capacity at C_3, using the one which allows the detector to be worked at the minimum setting of the regeneration control without by-passing too much of the audio.

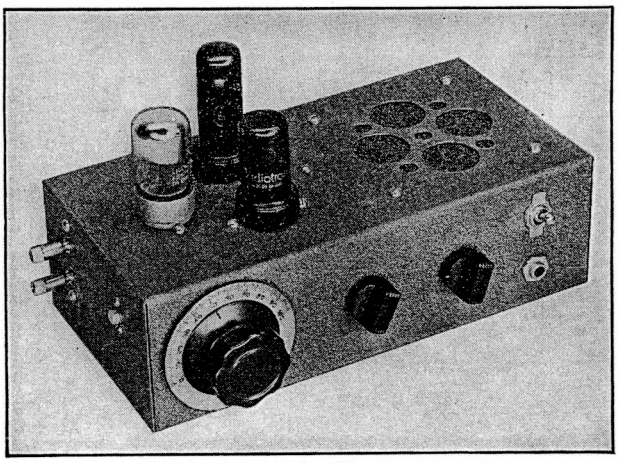

Fig. 1621 — A superregenerative receiver with built-in speaker, constructed on a standard chassis base. The detector trimming condenser is mounted on the side. The audio gain control is mounted next to the tuning control (extreme left). The regeneration control is between the volume control and the 'phone jack and on-off switch.

When the receiver is working and the tuning loop installed, the tuning range of the loop can be adjusted by moving the shaft in the panel bearing so that the loop is nearer to or farther from the coil. Moving the loop closer will increase the tuning range. It will be found that the tuning rate is slow when the loop is at right angles to the coil and becomes faster as the loop and coil become more nearly coaxial. It is therefore advisable to set the band and bandspread so that the receiver tunes from about 111.5 to 119 Mc., since this will spread the band over the main portion of the dial. When the shaft position which gives proper bandspread has been found, the fiber washer can be fastened to the shaft with Duco cement. When this is dry, the dial or knob can be attached to the outside end of the shaft. Play of the shaft in the bearing can be cured by slipping two metal washers and a half-slice of rubber grommet on the shaft before the dial is slipped on. The dial set screw should be tightened when the shaft is being pushed out from the inside, and the spring of the rubber grommet will then hold the collar (fiber washer) tightly against the inside of the panel bearing. A paper scale can be glued to the box and the megacycle and half-megacycle points marked on it, for ease in spotting stations and convenient resetting.

The antenna coupling should be adjusted with the antenna connected, and it should be made as tight as is consistent with some reserve in the regeneration control to take care of low voltages and other variables.

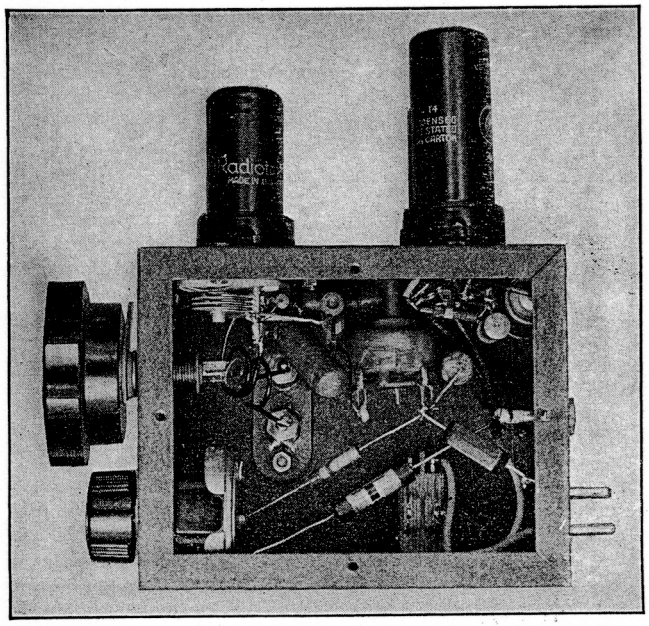

Fig. 1620 — A view from the right-hand side of the compact receiver.

Superregenerative receiver with built-in speaker — The receiver shown in Figs. 1621 to 1623 is slightly more elaborate, differing from the receiver just described mainly in the inclusion of an audio volume control and a built-in loudspeaker. Minor differences include the use of a 7A4 detector (a slightly better but less common tube than the 6J5) and the use of capacitive tuning.

The receiver is built in a 10 × 5 × 3-inch chassis, with the tubes and speaker mounted on the 5 × 10-inch face. One side is used for a panel and the opposite side is left clear in case one wishes to operate with the receiver resting on this side. The antenna terminals and the detector padding condenser are mounted on the left-hand side, and the four-prong power plug is mounted on the right-hand side. The only care necessary in laying out the chassis is to mount the tuning condenser and the padding condenser so that their respective terminals come close

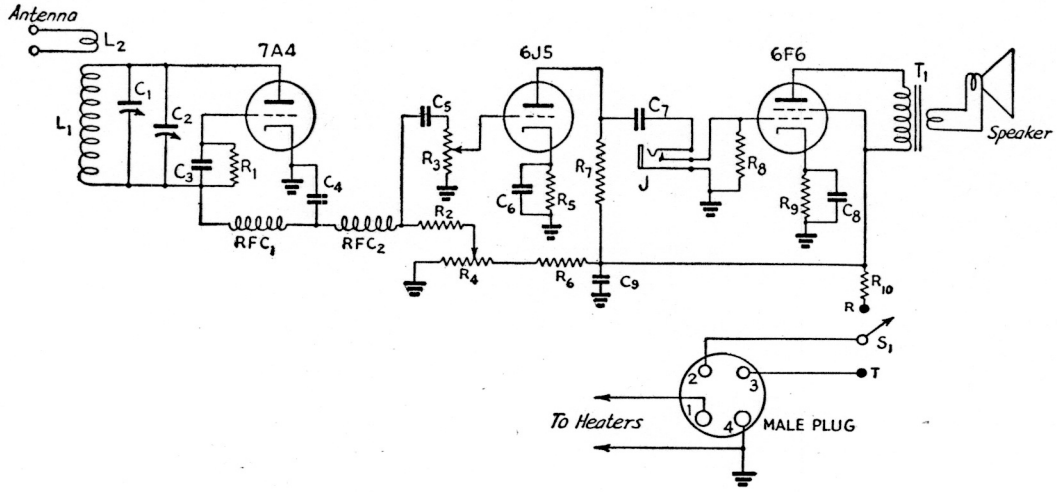

Fig. 1622 — Wiring diagram of the 7A4 superregenerative receiver with built-in speaker shown in Fig. 1621.

C_1 — 25-$\mu\mu$fd. air trimmer (Hammarlund APC-25).
C_2 — 5-$\mu\mu$fd. tuning condenser (National UM-15 with 2 stator and 2 rotor plates removed).
C_3 — 50-$\mu\mu$fd. midget mica.
C_4 — 0.006-μfd. mica.
C_5, C_7 — 0.01-μfd. 600-volt paper.
C_6, C_8 — 10-μfd. 25-volt electrolytic.
C_9 — 8-μfd. 450-volt electrolytic.
R_1 — 5 megohms, ½ watt.
R_2 — 25,000 ohms, 1 watt.
R_3 — 0.5-megohm volume control.
R_4 — 50,000-ohm wire-wound pot.
R_5 — 1500 ohms, ½ watt.
R_6, R_7 — 50,000 ohms, 1 watt.
R_8 — 0.1 megohm, ½ watt.
R_9 — 500 ohms, 1 watt.
R_{10} — 2000 ohms, 10-watt wire-wound or higher. See text.
J — Closed-circuit jack.
RFC_1 — V.h.f. choke (Ohmite Z-1).
RFC_2 — 80-mh. r.f. choke (Meissner 19-2709).
S_1 — S.p.d.t. toggle switch.
T_1 — Output matching transformer.
Speaker — 4-inch p.m. type.
L_1 — 1¾ turns No. 14 e., ½-inch inside diameter, spaced diameter of wire.
L_2 — ⅞ turns No. 14 e., ½-inch inside diameter.

together, to make the leads as short as possible. The tuning condenser, C_2, is supported back of the panel on long (1¾-inch) 6–32 screws, and the padding condenser is mounted directly on the side of the chassis. A bakelite shaft extension is fastened to the tuning condenser shaft and brought out through a panel bearing. The quench r.f. choke, RFC_2, is supported between the two audio tube sockets on a ½-inch pillar.

Each socket has a soldering lug placed under one screw, and all of the grounds for that particular stage are made to the lug. Most of the resistors and condensers can be mounted directly on tube or variable resistor terminals.

The coil, L_1, can be trimmed slightly by squeezing the turns together or pulling them apart until the desired amount of bandspread is obtained. The antenna adjustment is made by moving the antenna coil, L_2, closer to L_1 until the regeneration control must be set at about ⅔ full for "supering" to start. This adjustment is made with the antenna connected.

A superheterodyne receiver — The ordinary 112-Mc. superregenerative receiver is not very selective, and in localities where several networks are operating within a relatively narrow frequency band it may be necessary to go to a more selective type of receiver to

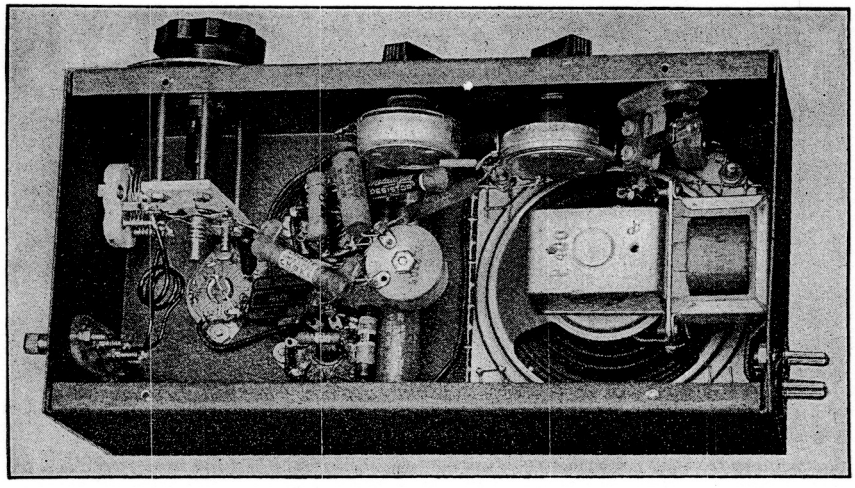

Fig. 1623 — This underside view of the 7A4-detector superregenerative receiver shows the loudspeaker mounted at one end of the 5 × 10 × 3-inch chassis. The detector tuning condenser is mounted on long machine screws from the front "panel." The r.f. chokes may be seen in the clear at the left center. The male plug for the power-supply cable is to be seen mounted on one end at the corner near the loudspeaker.

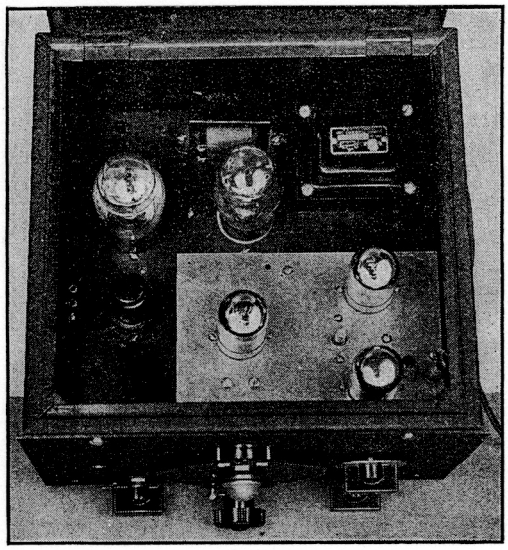

Fig. 1624 — A superregenerative superheterodyne receiver, designed for greater selectivity than can be obtained from the ordinary superregenerator. The audio section is along the left edge of the chassis and the self-contained power supply is at the upper right. The cabinet is approximately 9½ inches square and 7 inches deep.

minimize interference. In addition, the radiation from a superregenerator can cause an annoying type of interference when station locations are fairly close together. Both these disadvantages can be overcome by using a superheterodyne. The well-known advantages of the superregenerator — simplicity, sensitivity and economy of tubes and components — can in large part be retained by using a superregenerative detector as the i.f. system of the superheterodyne. Since the intermediate frequency will be considerably lower than the signal frequency the selectivity will be increased in proportion, while the receiver as a whole is increased in complexity only by the addition of two tubes and relatively simple accompanying circuits.

A superheterodyne of this type is shown in Figs. 1624 to 1627. It uses commonly-available triodes in the r.f. and i.f. sections, and equivalent types such as the 6J5, 6C5, etc., can be substituted with little difference in performance. The i.f. in the receiver shown is approximately 26 Mc., a frequency low enough to give a worth-while increase in selectivity while still high enough to give good superregenerative operation.

A complete circuit diagram of the receiver is given in Fig. 1626. The audio section consists of a 6C5 and 6V6, and is conventional except for the fact that the headphone jack is shunted across the 6V6 grid circuit rather than being arranged to disconnect the audio signal from the speaker tube when the 'phones are plugged in. This allows others to hear what is going on while the operator excludes outside noise by wearing headphones.

The mixer input circuit consists of the tuned circuit, L_2C_1, coupled to the antenna or feeders by the one-turn coil, L_1. Since the grid-cathode portion of the tube acts as a diode rectifier, it takes energy from the tuned circuit; consequently a rough impedance match between the circuit and tube is brought about by tapping down on the coil. Voltage from the oscillator is capacity-coupled to the mixer through C_8.

The mixer plate circuit is tuned to the intermediate frequency, 26 Mc., by a 30-$\mu\mu$fd. mica trimmer, C_3, across the coil L_4. To prevent short-circuiting the d.c. plate voltage a blocking condenser, C_4, is incorporated in the tuned circuit. The plate coil, L_4, is inductively coupled to the superregenerative detector coil, L_5. For optimum sensitivity the mixer plate voltage should be in the vicinity of 20 to 25 volts. This voltage is obtained from a voltage divider, R_4R_5.

The local oscillator should have a fairly high-C tank circuit to insure stability, and the grid-leak resistance should be low enough to prevent squegging. A value of 10,000 ohms is satisfactory with the oscillator operating at approximately 100 volts on the plate.

The superregenerative detector circuit is similar to those previously shown. For optimum results different values for the grid leak, R_2, and the plate by-pass condenser, C_7, should be tried.

The r.f. section of the outfit is the only part which requires particular care in construction; as shown in the photographs, this is assembled on a small subchassis and can be removed as a

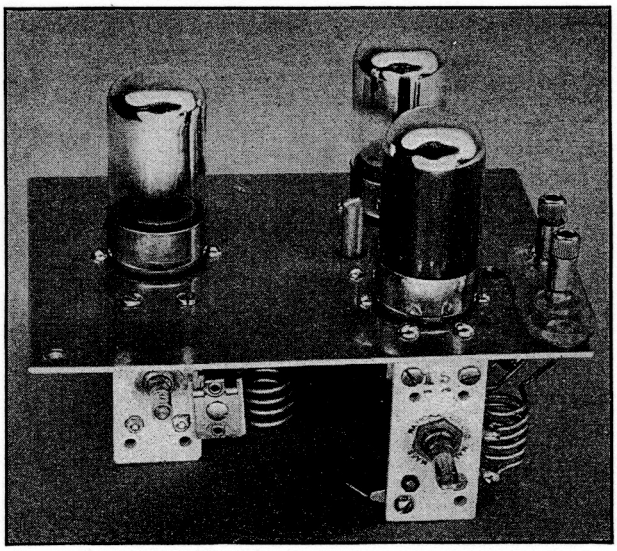

Fig. 1625 — The r.f. unit of the superregenerative superheterodyne, consisting of the mixer, high-frequency oscillator and superregenerative detector, is built on a small 4 × 6-inch metal subchassis. The hole between the mixer tube and antenna binding post assembly is for screwdriver adjustment of the i.f. transformer primary.

unit from the receiver. The subchassis is a 4 × 6-inch piece of aluminum and mounts to the main chassis by means of three brass-rod pillars a little over 2¼ inches long. Viewed from the top, the oscillator is to the left, the mixer is in the right foreground, and the i.f. tube is at the rear right. The oscillator is mounted somewhat back from the front to allow room for an insulated coupling and extension shaft, necessary because both ends of the tuning condenser are "hot." The mixer tuning condenser is mounted at the front of the subchassis so that its shaft can extend through the front panel. The tank coils in both the oscillator and mixer circuits are mounted directly on the condenser terminals.

The i.f. coils, L_4 and L_5, are wound on a polystyrene form mounted between the mixer and detector as shown. The detector condenser, C_5, is air-tuned and is mounted on the subchassis. Both sides must be insulated from ground. The primary tuning condenser, C_3, is a mica trimmer mounted so that its adjusting screw is accessible through a hole in the subchassis. The movable plate should be connected to ground so that body capacity can be avoided in making adjustments. The plate choke, RFC_2, is supported at one end by the tap on L_5 and at the other by C_7, the grounded terminal of which is soldered to a lug fastened under one of the socket-mounting screws.

The sensitivity of the receiver depends a great deal on the amount of oscillator voltage injected into the mixer grid circuit. The sensitivity will be poor if the oscillator voltage is too small, but once enough is secured a further increase has relatively little effect. The "condenser" actually used is formed by fastening a machine screw in one of the mounting holes in the Isolantite frame of the tuning condenser, C_1, so that it is fairly close to one stator mounting post of the condenser. The small capacity thus provided (C_8) is ample for coupling when the oscillator is operated with about 100 volts on the plate.

In making preliminary adjustments, the first operation is to get the superregenerative detector on frequency, which is best done by listening for its "hash" output on a regular communications receiver tuned to the approximate intermediate frequency of 26 Mc. The mixer and detector should be in their sockets but the oscillator should either be out or its plate voltage disconnected. Set the detector in operation, adjusting R_6 until superregeneration occurs, and tune C_5 to put the detector on frequency. Then tune C_3 to resonance, which will be indicated by absorption of energy from the detector circuit so that R_6 has to be advanced to maintain superregeneration. Since tuning one circuit affects the tuning of the other it will be necessary to go through this process several

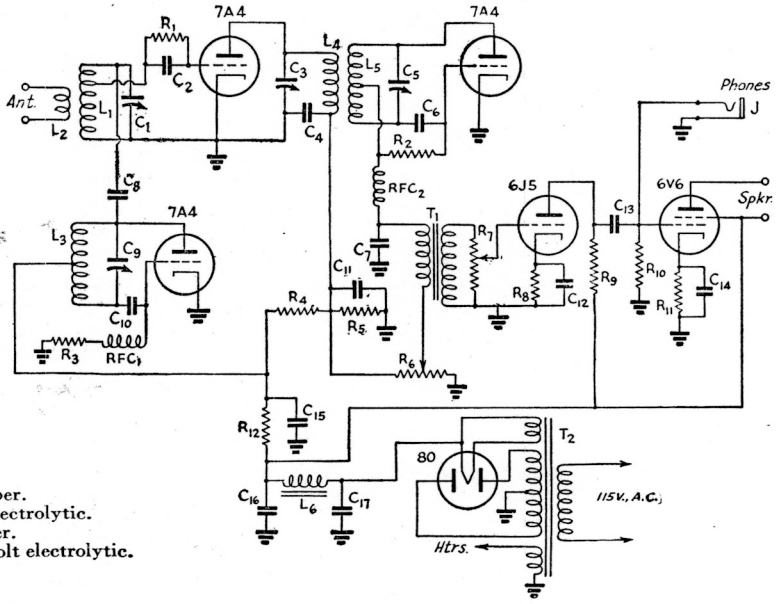

Fig. 1626 — Circuit diagram of the superregenerative superheterodyne.

C_1 — 3-plate midget, approximately 5 μμfd. (National UM-15 cut down.)
C_2 — 50-μμfd. mica.
C_3 — 3–30-μμfd. mica trimmer.
C_4 — 500-μμfd. mica.
C_5 — 35-μμfd. variable (Millen 20035).
C_6 — 100-μμfd. mica.
C_7 — 0.002-μfd. mica.
C_8 — See text.
C_9 — 15-μμfd. variable. For bandspread, use a 2-plate variable similar to C_1 in parallel with a 3-30-μμfd. mica trimmer.
C_{10} — 100-μμfd. mica.
C_{11} — 0.01-μfd. 400-volt paper.
C_{12}, C_{14} — 25-μfd. 25-volt electrolytic.
C_{13} — 0.1-μfd. 400-volt paper.
C_{15}, C_{16}, C_{17} — 8-μfd. 450-volt electrolytic.
R_1 — 2 megohms, ½-watt.
R_2 — 5 megohms, ½-watt.
R_3 — 10,000 ohms, ½-watt.
R_4, R_5 — 50,000 ohms, 1-watt.
R_6 — 50,000-ohm volume control.
R_7 — 0.5-megohm volume control.
R_8 — 2000 ohms, 1-watt.
R_9 — 50,000 ohms, 1-watt.
R_{10} — 0.5 megohm, ½-watt.
R_{11} — 750 ohms, 1-watt.
R_{12} — 15,000 ohms, 10-watt.
L_1 — 5 turns No. 14, ½-inch diameter, turns spaced slightly more than diameter of wire; grid tap 3½ turns from ground end.
L_2 — 1 turn, same diameter as L_1.
L_3 — 4 turns No. 12, ½-inch diameter, length ½ inch.
L_4 — 12 turns No. 24 d.s.c. on ½-inch form, close-wound.
L_5 — Same as L_4 but tapped at center, spaced ½ inch from L_4.
L_6 — 10-henry 50-ma. filter choke.
J — Open-circuit jack.
T_1 — Interstage audio transformer.
T_2 — Power transformer, 250 volts at 50-60 ma., with rectifier filament and 6.3-volt heater windings.
RFC_1 — 1½-inch winding of No. 30 s.c.c. on ¼-inch diameter form.
RFC_2 — 2.5-mh. r.f. choke.

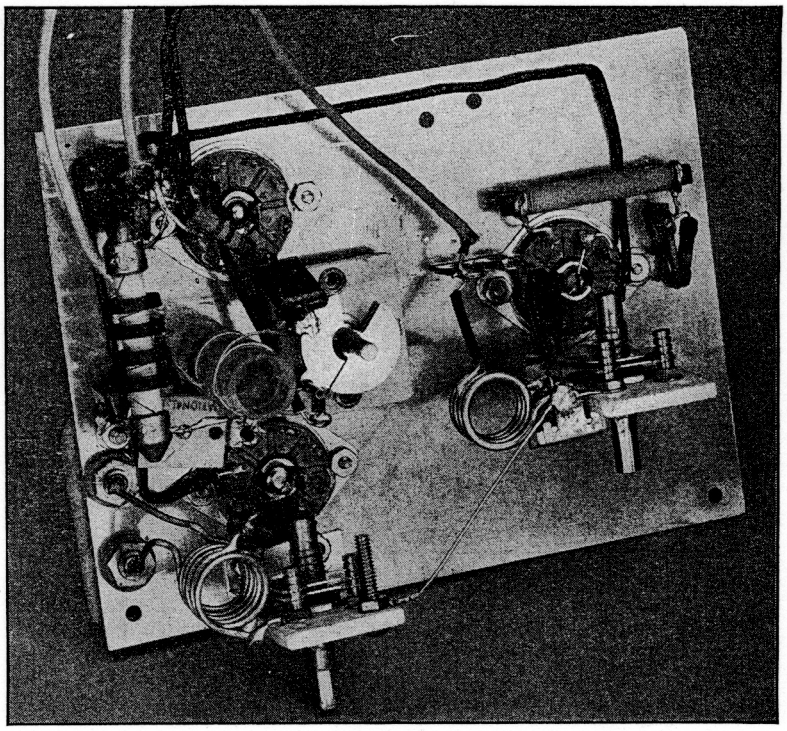

Fig. 1627 — A bottom view of the superheterodyne r.f. unit. The mixer circuit is at the lower left, with the detector above and oscillator to the right. Note the machine screw (on the mixer tuning condenser) which forms one "plate" of the oscillator-mixer coupling condenser. The mica padders used in the oscillator and i.f. circuits are convenient and inexpensive, but air padders would be preferable for long-time stability.

times to maintain the desired frequency. If the primary circuit extracts too much energy, the superregenerative hiss will lose its smooth character and the sensitivity will be poor. This condition can be corrected either by loosening the coupling between the two coils or by detuning the primary sufficiently to obtain satisfactory operation.

To adjust the oscillator, set up a low-power 112-Mc. oscillator in the vicinity and then tune C_9 until a signal is heard. If the bandspread system with a mica padder is used, the movable plate on the padder should be fairly close to the fixed plate, but not squeezing the mica. The padding capacity required is of the order of 10 $\mu\mu$fd., depending upon the inductance of L_3 which will vary somewhat with the turn spacing. Some care must be used, because it is readily possible for harmonics of one or both of the oscillators to beat to produce a spurious i.f. signal. If several signals can be heard in adjusting the padder over its range, the strongest one should be chosen.

Once the signal is found, the mixer circuit should be adjusted to resonance. It is probable that the coil will have to be pruned or the turn spacing altered to bring the signal definitely on the tuning scale of C_1. The coil size also depends upon the position of the grid tap. By a process of cut-and-try the coil size and tap position which give maximum signal strength can eventually be determined.

In practice the tuning of the receiver is effectively single control, since C_1 may be set at about the center of the band and the circuit will be broad enough to give good response at both ends. The regeneration control is not affected by tuning of the r.f. circuits except when the primary condenser, C_3, is set very close to the critical point with L_4 and L_5 overcoupled. Under these conditions any small change either in loading or capacity can throw the detector into or out of oscillation, and since the mixer is a triode such changes can be reflected from the r.f. circuits through the grid-plate capacity of the tube. Under optimum i.f. adjustments this does not occur.

A combination transmitter-receiver — It is frequently convenient to build the transmitting and receiving equipment in one assembly, arranged with a switch to shift both the antenna and plate supply from "receive" to "transmit" in a single operation. This type of construction is economical as well, since it becomes readily possible to use the same audio amplifier for both transmitter and receiver. A station of this type is shown in Figs. 1628, 1629 and 1631. The circuit is given in Fig. 1630.

In the receiver section, a 6J5GT is used as a self-quenching superregenerative oscillator. R_9 is the regeneration control. A 6V6, with its plate and screen tied together to form a triode, is used in the transmitter.

The audio section consists of a 6J5 speech-amplifier stage, resistance coupled to a Class-A 6L6 modulator. This section may be switched to act either as speech amplifier and modulator for the transmitter or as a resistance-coupled amplifier for the superregen detector in the receiver, when its output is coupled to a p.m. speaker. Separate audio gain controls are used for transmitting (R_3) and receiving (R_4).

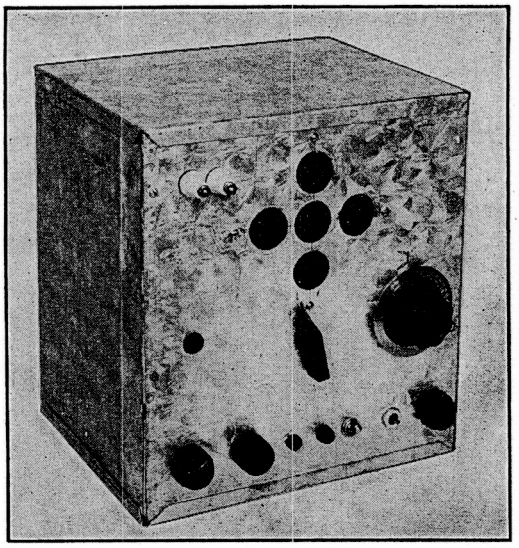

Fig. 1628 — The transmitter-receiver is built in a sheet-iron case. The large dial is the receiver tuning control. The transmit-receive switch is located in the center below the speaker opening. The adjusting hole for transmitter tuning may be seen at the left. Along the bottom, from left to right, are the microphone gain control, receiver audio gain control, headphone pin jacks (which may be used to replace the open-circuit jack, J_2, in Fig. 1630 if desired), headphone-speaker switch, microphone jack, and regeneration control. Output terminals are in the upper left-hand corner. The five holes at the top are the speaker grille. The unit was constructed by W1DBM.

If a microphone transformer of the usual type is unobtainable, an ordinary bell-ringing transformer makes a very satisfactory substitute. For modulation purposes, the primary of the speaker output transformer is connected as an autotransformer with a 1-to-1 ratio. In this manner, the d.c. plate currents for the modulator and oscillator flow through separate sections of the primary winding and in such directions as to buck in core-magnetizing effects, thereby increasing the effective inductance of the primary winding.

The headphone signal is coupled from the primary of T_2 through C_{14}. Interchange between headphones and loudspeaker is by means of the double-pole double-throw toggle switch, S_2. An 8-pole dual gang switch takes care of switching between receiving and transmitting. In the receiving position, the plate supply is connected to the detector, the audio input is shifted to the detector output, speaker and headphones are connected to the output of the audio section, the mike battery and plate supply are disconnected from the transmitter, and the antenna is shifted to the receiver. In the transmitting position, the plate supply is disconnected from the detector, the audio input shifted to the output of the mike transformer, speaker and headphones disconnected from the audio output, mike battery and plate supply connnected to the transmitter, and the antenna shifted to the transmitter.

A metal chassis, 10 inches long, 5 inches wide and 3 inches deep, forms the foundation for the unit. The receiver components are grouped at one end of the chassis, while those for the transmitter are similarly grouped at the other end. The 6J5GT detector tube is mounted horizontally by means of a metal bracket in which the ceramic socket is set. The receiver tuning condenser, C_1, is mounted on a small stand-off insulator to space it from the chassis and to bring its terminals up close to the plate and grid prongs of the detector socket. The detector inductance, L_2, is soldered directly across the terminals of C_1, while the grid leak and condenser are connected between the rotor of C_1 and the grid terminal of the detector socket. A ceramic flexible coupling is used between the shaft of the condenser and the tuning dial. The dial-coupling extension shaft is passed through a rubber grommet set in the panel.

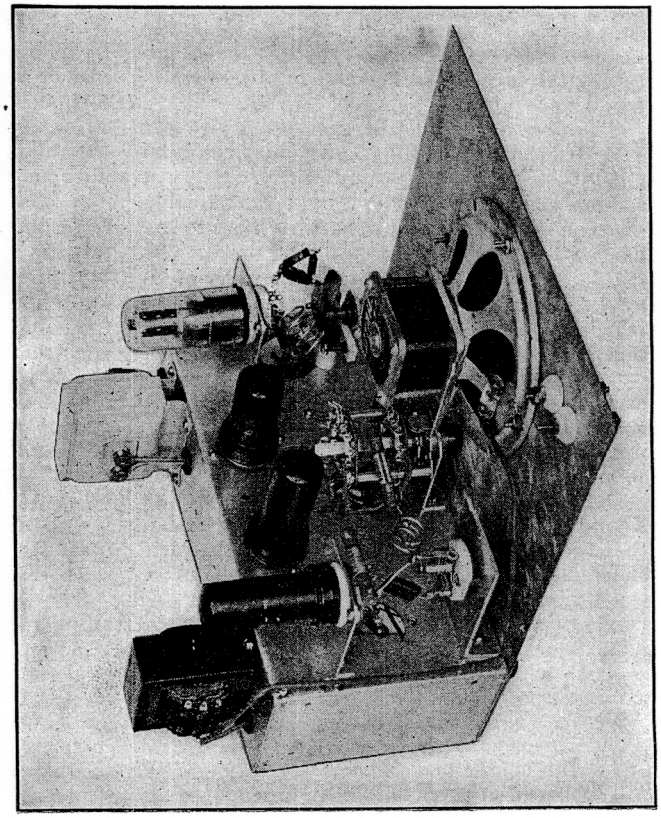

Fig. 1629 — Interior view of the transmitter-receiver. The transmitter section is in the left foreground, with the receiver section at the right-hand end of the chassis. This photograph was made before output terminals (at upper right on panel) were connected to the send-receive switch.

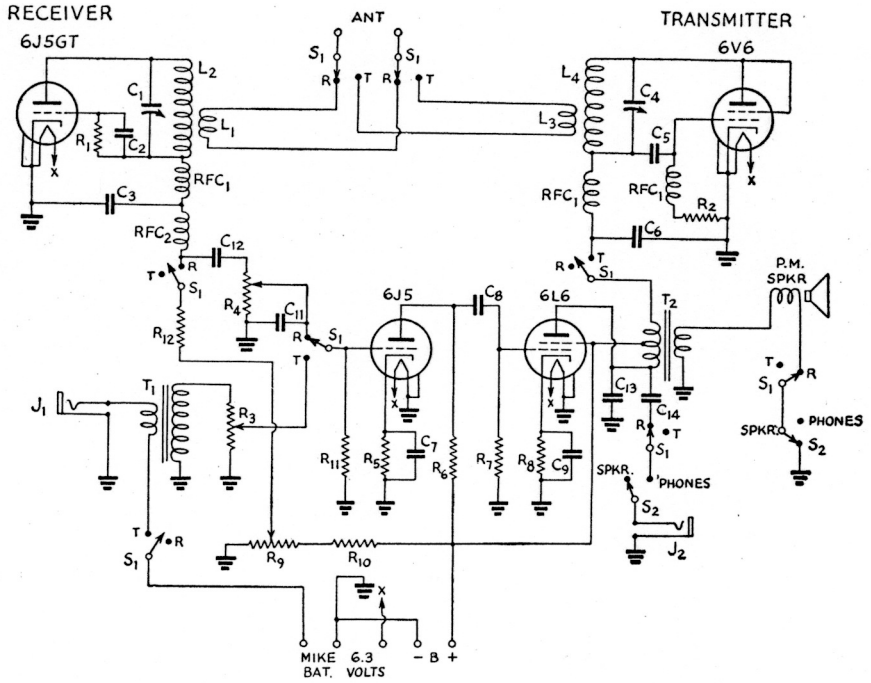

Fig. 1630 — Circuit diagram of the 112 Mc. combination transmitter-receiver for WERS.

C_1 — 2-plate midget variable (Hammarlund MCM type).
C_2 — 50-$\mu\mu$fd. midget mica.
C_3 — 0.01-μfd. 600-volt paper.
C_4 — 5-plate midget air trimmer, approximately 20 $\mu\mu$fd.
C_5 — 50-$\mu\mu$fd. midget mica.
C_6 — 0.001-μfd. midget mica.
C_7 — 10-μfd. 25-volt electrolytic.
C_8 — 0.01-μfd. 600-volt paper.
C_9 — 10-μfd. 25-volt electrolytic.
C_{10} — 0.01-μfd. 600-volt paper.
C_{11} — 100-$\mu\mu$fd. mica.
C_{12} — 0.01-μfd. 600-volt paper.
C_{13} — 0.001-μfd. 600-volt paper.
C_{14} — 0.01-μfd. 600-volt paper.
R_1 — 5 megohms, ½-watt.
R_2 — 15,000 ohms, ½-watt.
R_3 — ½-megohm potentiometer.
R_4 — ½-megohm potentiometer.
R_5 — 1500 ohms, ½-watt.
R_6 — 50,000 ohms, 1-watt.
R_7 — 100,000 ohms, ½-watt.
R_8 — 500 ohms, 1-watt.
R_9 — 50,000-ohm potentiometer.
R_{10} — 50,000 ohms, 1-watt.
R_{11} — ¼-megohm, ½-watt.
R_{12} — 25,000 ohms, 1-watt.
RFC_1 — V.h.f. choke (Ohmite Z-1).
RFC_2 — 80-mh. r.f. choke.
J_1 — Open-circuit microphone jack.
J_2 — Open-circuit headphone jack.
L_1 — 1 turn No. 14, ½-inch diameter.
L_2 — 4 turns No. 14, ½-inch diameter.
L_3 — 1 turn No. 14, ½-inch diameter.
L_4 — 3 turns No. 14, ½-inch diameter.
S_1 — Sections of 8-pole, 2-gang rotary switch (Centralab).
S_2 — D.p.d.t. toggle switch.
T_1 — Microphone transformer (bell-ringing transformer).
T_2 — Universal output transformer.

At the other end of the chassis, the 6V6 is also mounted horizontally by setting the socket in a vertical metal bracket. A similar bracket serves to hold the transmitter tuning condenser, C_4. This condenser is adjusted by a screwdriver through a hole in the front panel. This type of control eliminates the possibility of throwing the transmitter frequency off by accidentally bumping a dial. Short-circuiting of the plate supply while adjusting the condenser is prevented by lining the adjusting hole with a rubber grommet. As in the receiver, the coil, L_4, is soldered directly across the condenser terminals.

At the center of the chassis are the submounted sockets for the two audio tubes and the change-over switch. The latter is mounted on a bracket fastened to the chassis. The microphone transformer, T_1, and the output transformer, T_2, both are mounted on the rear edge of the chassis.

The panel is made from ordinary galvanized sheet iron. There is room on the panel for a

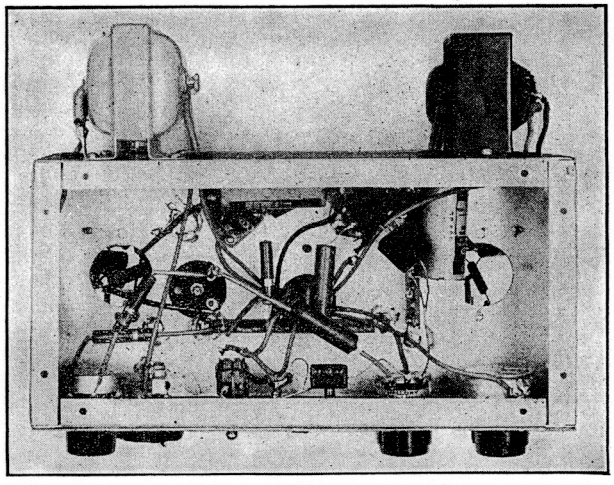

Fig. 1631 — Under-chassis view of the WERS transmitter-receiver.

five-inch permanent-magnet speaker. Large holes are cut in the speaker area as grille work and backed up with dust-proof cloth fastened under the rim of the speaker. A pair of feed-through insulators serve as output terminals.

The case for the unit also is made from galvanized sheet iron. The sides and back are made from a single piece bent into a **U** shape, with flanges at the front edges to which the panel may be fastened with machine screws. The top and bottom are identical, with edges bent to overlap the sides, back, and panel. If desired, the case may be dressed up by giving it a coat of "metal preparer," followed by a coat or two of enamel or Duco. Another possibility is to have it sprayed at a garage or automobile body works before the parts are mounted.

The unit is designed to operate from either an a.c. or battery-operated pack or from a combination pack delivering 300 volts at 100 ma. When loaded, the transmitter plate current should be 50 or 60 ma. This value may be adjusted within limits by altering the value of grid-leak resistance, higher resistance values resulting in lower plate current. The audio section should draw an average of about 50 ma. Normal r.f. power output is about 2 watts.

¶ Transceivers

The transceiver shown in Figs. 1632 to 1635 is constructed from parts which in most cases can be readily salvaged from old equipment. It is built around the more numerous types of standard receiving tubes, several of which can be used interchangeably. For operation at 200 volts or less the 6J5GT is preferable as the oscillator, since it works more efficiently than some of the other types. An easily constructed vibrator-type power supply for 200-volt operation is described in a later section. Where a 300-volt supply is used, the 6V6GT is recommended.

The audio system consists of a triode first stage (6J5 or 6C5) followed by a 6V6 (or 6F6)

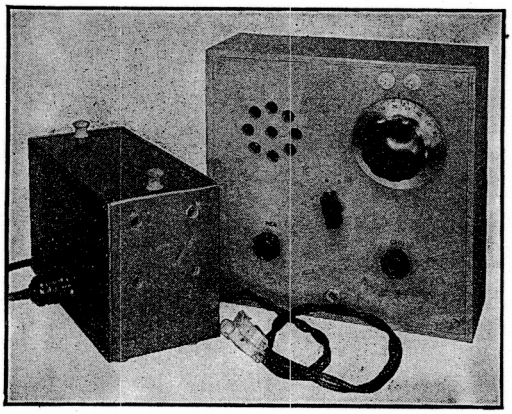

Fig. 1632 — This low-power transceiver and vibrator power supply can be built from receiver components which nearly every amateur can salvage from old equipment. The addition of an antenna, microphone, and storage battery makes it a complete emergency station.

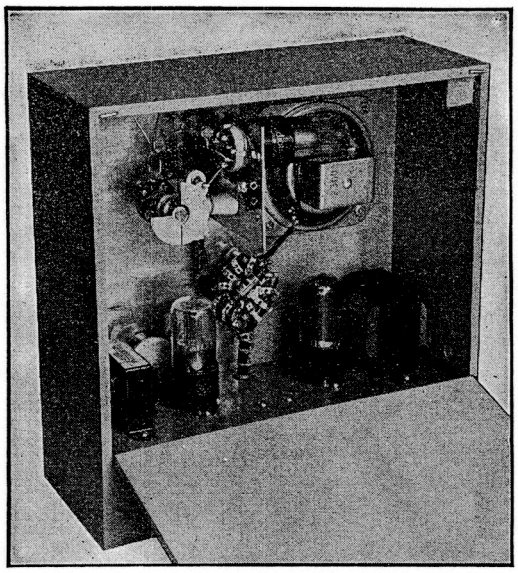

Fig. 1633 — A rear view of the transceiver installed in its case. The oscillator-detector is constructed as a unit on a projecting metal piece, with the audio unit below.

in any of the varieties of glass or metal. The pentode is used as a modulator in transmitting and to drive the loudspeaker in reception. There is no provision for headphone reception in this unit, but if it is wanted a jack can easily be connected in the 6J5 plate circuit. If this is done an additional switch section should be provided to cut out the headphone circuit when transmitting. As a matter of economy when operating from emergency power, the "B" drain could be cut to a very low value during reception periods if headphones only are used, since the change-over switch could be arranged to cut the "B" lead to the plate and screen of the pentode audio power tube. In the event that the speaker is not wanted or if a suitable unit is not available, this would be a worthwhile modification.

If a single switch wafer of the desired number of poles and circuits cannot be obtained, any 4-pole double-throw switch may be used. Usually some sort of wafer switch can be salvaged from old equipment; if it is necessary to use more than one gang, the only result is that the switch is more bulky.

Output transformers (T_2) usually can be taken from a discarded receiver, if not available new. The "transceiver transformer" used in this unit is an ordinary interstage audio (about 3:1 ratio) with a microphone primary added. There is usually enough space between the core and the windings to get in at least one layer of fairly fine wire, such as No. 30. It is necessary to take the core apart and possibly to remove some of the paper already around the windings. In the unit shown, the microphone primary is one layer of No. 30 s.c.c. (about 50 turns) wound over the existing windings. It was given a coat of shellac to hold it in

place, and covered with paper to prevent short circuits to the core.

The regeneration control circuit, consisting of R_9 and R_{10} in series, permits operating the detector at the lowest plate voltage consistent with good superregeneration, and thus holds receiver radiation to a minimum. The fixed resistor makes the setting of the control less critical, and also keeps the voltage across the variable resistor to a safe value.

The microphone current is obtained from the cathode circuit of the modulator tube, by tapping the microphone across part of the cathode resistor. The single by-pass condenser from cathode to ground is sufficient to prevent feed-back between the modulator and microphone circuits. In reception the microphone circuit is opened by the switch, with the result that the bias on the output tube rises and the plate current is reduced. This has no particular effect on the tube operation, particularly since full output is not needed in receiving.

The panel in this transceiver is a 10 × 10-inch piece of ¼-inch tempered Presdwood, while the shelf which holds the audio circuits is a 3½ × 10-inch piece of the same material. The shelf is mounted 1½ inches above the bottom of the panel, leaving room for the resistors and condensers underneath.

The box in which the transceiver is housed is made of ¼-inch plywood, with inside dimensions 10 × 10 × 3½ inches. At each corner the sides are glued to ¾ × ¾ × 3½-inch pieces of wood. A strip of plywood 1¾ inches high runs along the back, and a piece 1½ inches high is glued to it inside to form a support for the rear edge of the shelf when the assembly is placed in the cabinet. The remainder of the back is a door, hinged at the bottom, through which access can be obtained to the tubes and r.f. section. At the top it is held to the case by hooks. The panel is fastened to the corner blocks with wood screws.

The oscillator is all one unit, built on a 3 × 4-inch piece of scrap aluminum with ½-inch bent over at one end to form a mounting lip. The metal base projects 3½ inches behind the panel, the same depth as the shelf for the audio section. In general, the oscillator circuit has been arranged to make the leads between the tube and tuned circuit as short as possible. The mechanical layout may have to be varied for tuning condensers of different construction. A condenser having a maximum capacity of 10 to 15 μμfd. is required. The one used in the unit shown is a Hammarlund MC-20-S (originally having a maximum of 20 μμfd.) with one plate removed. To reduce capacity to ground, the rear bearing assembly was taken off by sawing the rotor shaft and the side rods holding the stator plate. Removing this excess material noticeably increased the efficiency of the circuit.

The tuned-circuit coil, L_1, is wound of No. 12 wire, one end being mounted under the condenser panel-mounting nut and the other being soldered to the end of the side rod holding the stator plate. Since both sides of the condenser must be insulated from ground, the condenser is mounted on a midget stand-off insulator. An insulated coupling and extension shaft connect the rotor to the tuning dial.

The plate and grid chokes are mounted from insulated lugs at the "cold" ends, the hot ends being placed as close as possible to the points in the circuit where they connect. The power

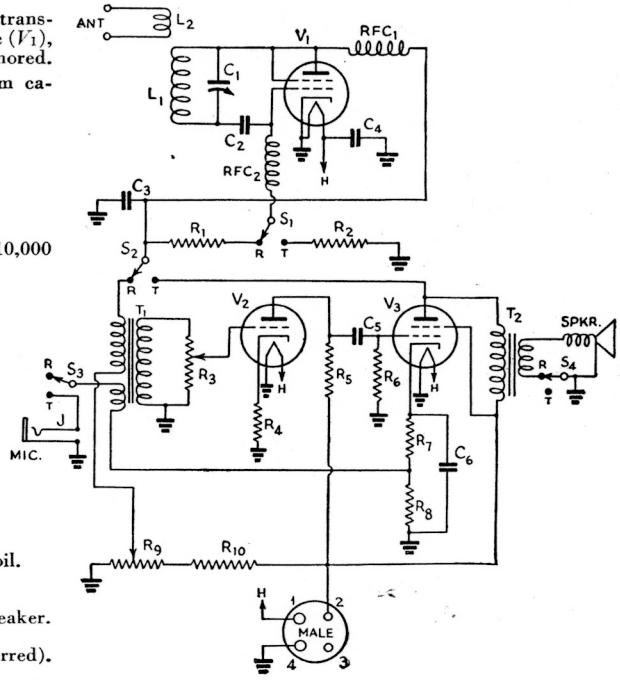

Fig. 1634 — Circuit diagram of the low-power transceiver. If a triode is used for the oscillator tube (V_1), the screen-grid connections shown may be ignored.

C_1 — Midget variable, 10–15 μμfd. maximum capacity.
C_2 — 50-μμfd. mica.
C_3 — 0.005-μfd. mica.
C_4 — 250-μμfd. mica.
C_5 — 0.1-μfd. paper, 400 volts.
C_6 — 25 to 50 μfd. electrolytic, 50 volts.
R_1 — 5 megohms, ½-watt.
R_2 — 5000 ohms, 1-watt (for 6J5, 6C5); 10,000 ohms, 1-watt (for 6V6, etc.).
R_3 — 0.5-megohm volume control.
R_4 — 1000 ohms, ½-watt.
R_5 — 0.1 megohm, 1-watt.
R_6 — 0.5 megohm, ½-watt.
R_7 — 250 ohms, 1-watt.
R_8 — 200 ohms, 1-watt.
R_9 — 50,000-ohm volume control.
R_{10} — 50,000 ohms, 1-watt.
L_1 — 3 turns No. 12, 9/16-inch inside diameter, ½-inch long.
L_2 — 1 turn No. 12 or No. 14.
RFC_1, RFC_2 — 55 turns No. 30 d.c.c., close-wound, ¼-inch diameter.
T_1 — Transceiver transformer (see text).
T_2 — Output transformer, pentode to voice coil.
S_{1-4} — 4-pole double-throw switch.
J — Open-circuit jack.
Spkr — 3-inch permanent-magnet dynamic speaker.
V_1 — 6J5, 6C5, 6V6, 6F6, etc.
V_2 — 6J5, 6C5. V_3 — 6V6, 6F6 (GT types preferred).

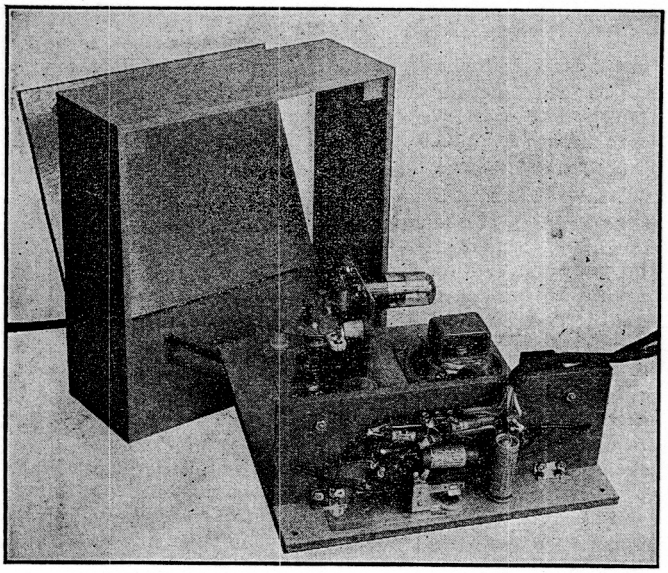

Fig. 1635 — Below-shelf wiring and construction of the 112-Mc. transceiver. The unit can be removed from the plywood cabinet for servicing.

leads from the r.f. section are cabled and brought down to the switch.

The speaker is mounted on the panel as shown. To protect the cone from damage, the grille holes are backed by a piece of window-screen material which is held in place by the bolts which fasten the speaker to the panel.

The metal strip running from top to bottom of the panel serves as a shield to prevent body capacity and also as a low-inductance ground connection between the oscillator and the audio section. It makes direct contact with the oscillator support, the rotor of R_3, the metal frame of the switch, and the frame of the microphone jack. It is approximately 4 × 9½ inches, and was cut from an ordinary tin can.

In the rear view the transformer at the left is T_1, the revamped audio transformer. The audio gain control, R_3, is on the panel between R_1 and the 6J5 first audio. The modulator tube and speaker transformer are at the right, with the regeneration control, R_9, behind them on the panel. All leads from the switch are cabled and pass through a hole in the shelf near the panel. The two grid leaks, R_1 and R_2, are mounted directly on the switch contacts, but all other resistors are below the shelf. The below-shelf arrangement is of no particular consequence, since there are no r.f. circuits — except that the grid leads to both tubes should be kept short, so that hum pick-up will be minimized. The dropping resistor, R_{10}, for the regeneration control circuit is mounted on the lug strip at the rear; the other two resistors which connect together at this strip are the two sections of the modulator cathode resistor. Spare terminals on the tube sockets are used as tie points wherever necessary.

It is possible that in a particular layout the proper choke specifications will differ from those given. The grid choke is the more critical. In both cases the number of turns should be adjusted so that the cold end can be touched with the finger without disturbing the operation of the oscillator. Effective superregeneration depends considerably on the grid choke and on the capacity of the plate by-pass condenser, C_3. The circuit may not superregenerate at all with less than 0.002 μfd. at C_3, while values higher than 0.005 tend to cut down the audio output because of the rather heavy by-pass effect across the primary of the audio transformer, T_1. The value recommended is a good compromise. Two or more condensers may be connected in parallel or series if the exact capacity is not obtainable in one unit.

The coil inductance is adjusted by spreading or squeezing the turns until the proper frequency range is secured. It is best to adjust the coil inductance to bring 112 Mc. near the maximum-capacity end of the tuning range.

The size of the antenna coupling coil, which is mounted on the feed-through insulators on the panel, will depend upon the antenna system used. Usually a turn or two of wire is sufficient, the coupling being adjusted by bending the leads so that the position of the antenna coil is changed with respect to the tank coil.

The r.f. tube takes 20 or 25 ma. at 200 volts when transmitting, and has an r.f. output of a watt or so. Including the audio system, the total current drain in the transmit position is in the neighborhood of 60 ma. at 200 volts. In reception the plate current of the r.f. tube is negligible, and the total current at 200 volts is only about 35 ma.

Mobile equipment — The equipment previously described is readily adaptable to temporary mobile operation when provided with a storage-battery operated power supply and installed in a car having a suitable antenna (see pages 367–369 for discussion of antennas). In a permanent mobile installation, however, it is desirable to arrange the equipment so that it is instantly accessible for operation, yet does not interfere with the regular car controls nor occupy space normally available for passengers.

One method of accomplishing this is to make the transmitter and receiver separate units, installing the receiver on the car dashboard where its controls are within reach of the driver, and locating the transmitter and power supply in the luggage compartment. This is practicable because the transmitter ordinarily is operated on a fixed frequency and hence does not require frequent readjustment. A mobile station of this type is described in Chapter Fifteen (Figs. 1534–1537).

An alternative is to construct the transmitter and receiver as a unit and install it in some convenient spot, such as the glove compartment of the car. Such an installation is shown in Figs. 1636 to 1639. Normally the glove compartment will be too small to contain the necessary apparatus, but, if the fiber box is removed, the space behind the dash will, in most cases, be ample. In the set illustrated, the fiber box is replaced by a metal box of the same dimensions, backed by the chassis on which the transmitter and receiver are mounted. The box and chassis are made of No. 24 gauge sheet metal. If patterns are prepared beforehand, it will be possible to have the metal work done by a tinsmith at comparatively small cost. The actual dimensions naturally will be determined by the shape and size of the space available in the particular model of car in which the station is to be installed. The chassis shown in the photographs measures 12 inches wide and 10½ inches deep.

The circuit diagram of the mobile unit is given in Fig. 1638. Electrically, it is practically equivalent to the transmitter-receiver circuit of Fig. 1634. The transmit-receive switch is a Federal Radio anti-capacity type, with "outboard" antenna change-over contacts added. Below the change-over switch is the 1½-inch permanent-magnet dynamic speaker. To the left side of the speaker are the volume control and microphone jack. C_5, C_6, C_7, C_{16}, RFC_3 RFC_4, R_2, and the tank circuit, C_5L_4, are clustered around the base of the 6V6 oscillator tube. Trial showed that C_7 is a worth-while addition; while the 6V6 will oscillate without it, the output is considerably less.

To the right side of the speaker are the regeneration control and filament switch, the pilot light and the detector circuit. C_1, C_3, RFC_1, R_1, and the tank circuit, C_2L_1, are bunched about the base of the 6J5G. RFC_2 and C_4 are mounted on the underside of the chassis pan. RFC_2 is a low-frequency r.f. coil which, together with the associated condensers, forms a filter for the quench frequency.

The high-frequency chokes, RFC_1, RFC_3 and RFC_4, consist of 55 turns of No. 30 enameled wire wound on a drill shank, then sprung loose and fastened with Duco cement. The chokes are very light in weight and are safely mounted by the wire with which they are wound.

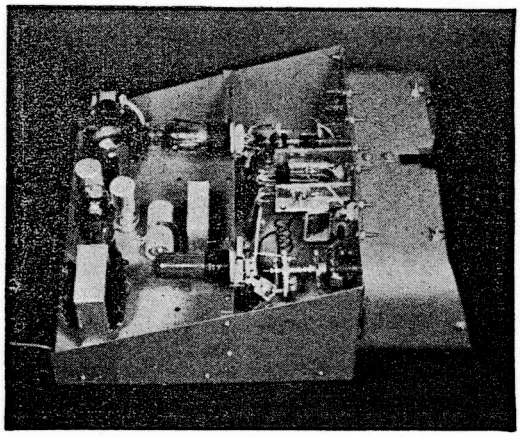

Fig. 1637 — Side view of the mobile unit, showing the chassis and mounting-hood arrangement. The metal chassis and hood are made of No. 24 gauge "black metal."

Directly behind the tube-mounting partition and between the detector and oscillator tubes is the filter choke, L_5. (This outfit obtained its plate power from the car broadcast receiver, which had a resistance-capacity filter. When this power was used for the transmitter-receiver, the filter resistor was shorted out, leaving only the condensers; hence the necessity for L_5 and C_{15}.)

Behind L_5 is the audio coupling condenser, C_{12}, which is too large to fit below deck. Left to right, across the back of the chassis, are the output transformer, the modulator tube, condensers C_9, C_{13}, C_{14} and C_{15}, the first audio tube and the audio input transformer. The latter had enough room between the original windings and the core for the installation of approximately 50 turns of No. 30 enameled wire for microphone input. The new winding is covered with cellophane tape to keep it in place and to protect it from moisture.

Beneath the chassis are RFC_2, C_4, R_5, R_6, R_7, R_8, R_9, C_{10}, C_{11}, R_{11}, and most of the audio and power wiring. Only two leads, each fused, leave the chassis. These are marked "A+" and "B+" in Fig. 1638. A third connection for negative returns is made through the frame of the car.

The numbered dials available were either too large to fit on the panel or too small for comfortable gripping. Pointer knobs were used, therefore, together with home-made scales. The scales were drawn in India ink on the backs of filing cards cut to size and fastened to the panel with rubber cement. The white plastic-knob pointers did not provide sufficient contrast with the white scale cards, and so the pointers later were roughed up with fine sandpaper and coated with black India ink.

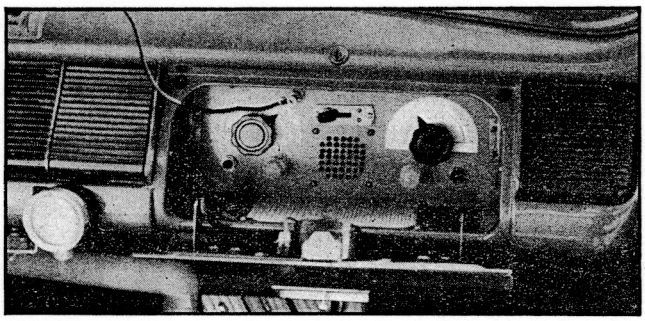

Fig. 1636 — A transmitter-receiver unit for mobile use, installed in the glove compartment of a car. This installation was made by W2DVG.

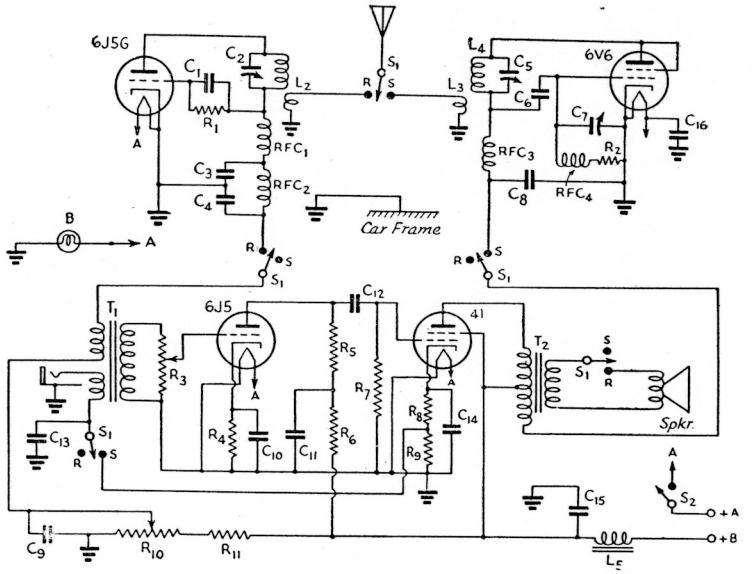

Fig. 1638 — Circuit of the mobile transmitter-receiver.
C_1 — 20-$\mu\mu$fd. mica.
C_2, C_5 — 3-plate variable (Cardwell Trim-Air).
C_3 — 0.006-μfd. mica.
C_4, C_6, C_8 — 0.001-μfd. mica.
C_7 — 3–30-$\mu\mu$fd. trimmer.
C_9 — 20-μfd. electrolytic.
C_{10}, C_{11} — 5-μfd. electrolytic.
C_{12} — 0.5-μfd. paper.
C_{13}, C_{14}, C_{15} — 20-μfd. electrolytic.
C_{16} — 100-$\mu\mu$fd. mica.
R_1 — 5 megohms, ½-watt.
R_2 — 15,000 ohms, 1-watt.
R_3 — 0.5-megohm pot.
R_4 — 2250 ohms, 1-watt.
R_5 — 0.1 megohm, ½-watt.
R_6 — 20,000 ohms, 1-watt.
R_7 — 0.5 megohm, ½-watt.
R_8 — 500 ohms, 1-watt.
R_9 — 200 ohms, 1-watt.
R_{10} — 50,000-ohm pot.
R_{11} — 50,000 ohms, 2-watt.
L_1, L_4 — 3 turns No. 14, ½-inch diameter, turns spaced so tanks tune to WERS band.
L_2, L_3 — 1 turn No. 14, ½-inch diameter.
L_5 — Replacement-type filter choke.
B — 6-volt pilot lamp.
RFC_1, RFC_3, RFC_4 — 55 turns No. 30, self-supporting.
RFC_2 — Low-frequency choke coil.
S_1 — Anti-capacity change-over switch (see text).
S_2 — Filament switch (on R_{10}).
Spkr — 1½-inch p.m. speaker (Cinaudagraph).
T_1 — Transceiver transformer (WE213-D with microphone winding of 50 turns No. 30 e. See text).
T_2 — Universal output transformer, push-pull type.

The volume- and regeneration-control knobs are made of ¾-inch Lucite rod, drilled for shaft size and drilled and tapped for set screws. They project out from the panel an inch and one-half for easy handling.

The regular car-radio antenna is used for the transmitter-receiver. It is of the telescoping type, passing through the roof. The antenna is connected to the switch terminal by an 18-inch lead and the system extended to ¾ wavelength. A vernier adjustment for antenna tuning is obtained by sliding the antenna up or down inside the car. This does not change its physical length but alters the portion which closely parallels the windshield dividing strip.

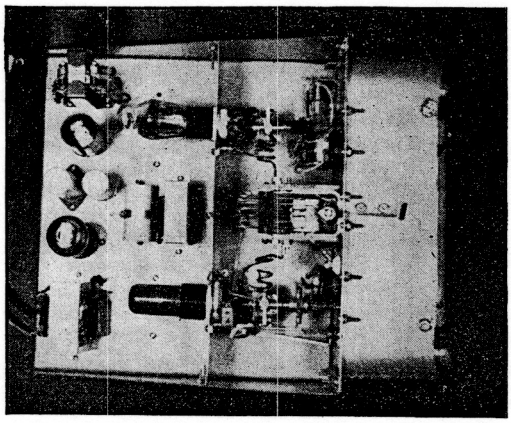

Fig. 1639 — Plan view of the mobile station, showing location of components. The oscillator and detector tubes are mounted horizontally from the partition, with associated tank-circuit components arranged close to the tube sockets. Audio equipment is at the rear. Most of the power wiring is concealed underneath the chassis.

Types of Power Supply

Under normal conditions there is available a fairly wide variety of equipment for generating plate power independently of the a.c. mains. Except possibly in isolated cases, these ready-made units cannot now be purchased from regular dealers. However, it may be possible to secure equipment of this type second-hand, and the information below is included for the benefit of those who may have occasion to need data on a particular type of power supply.

Dry batteries, both "A" and "B," are difficult to obtain. In the case of equipment built for dry-battery operation, such as certain models of commercial transceivers, it may be necessary, in portable operation to substitute a vibrator-type supply, even though this requires transporting a storage battery.

Dry batteries — Dry-cell batteries are ideal for receiver and low-power transmitter supplies because they provide steady, pure direct current. Their disadvantages are weight, high cost, and limited current capability. In addition, they will lose their power even when not in use if allowed to stand for periods of a year or more. This makes them uneconomical if not used more or less continuously.

Table I shows the life to be expected from representative types of batteries under various current drains, based on intermittent service simulating typical operation. The continuous-service life will be somewhat greater at very low current drains and from one-half to two-thirds the intermittent life at higher current drains.

The secret of long battery life at normal current drains lies in intermittent operation. The

duration of "on" periods should be reduced to a minimum. The more frequent the rests given a dry-cell battery, the longer it will last. As an example, one standard type will last 50 per cent longer if it is operated for periods of one minute, with five-minute rest intervals, in 24-hour intermittent operation than if it is operated continuously for four hours per day, although the actual energy consumption in the 24-hour period is the same in both cases.

Storage batteries — The most universally acceptable self-contained power source is the storage battery. It has high initial capacity and can be recharged, so that its effective life is practically indefinite. It can be used to provide filament or heater power directly, and plate power through associated devices such as vibrator-transformers, dynamotors and genemotors, and a.c. converters. For emergency work a storage battery is a particularly convenient power source, since such batteries are universally available. In a serious emergency it would be possible to obtain 6-volt storage batteries so long as there were automobiles to borrow them from, and for this reason the 6-volt storage battery makes an excellent unit around which to design the low-powered emergency station.

For maximum efficiency and usefulness the power drain on the storage battery should not exceed 15 or 20 amperes from the ordinary 100- or 120-ampere-hour 6-volt battery. Heavy connecting leads should be used to minimize the voltage drop; similarly, heavy-duty low-resistance switches are required.

Vibrator power supplies — The vibrator-type power supply consists of a special step-up transformer combined with a vibrating interrupter. When the unit is connected to a storage battery the circuit is made and reversed rapidly by the vibrator contacts, and the resulting square-wave d.c. pulses which flow in the primary of the transformer cause an alternating voltage to be developed in the secondary. This high-voltage a.c. in turn is rectified, either by a vacuum-tube rectifier or by an additional synchronized pair of vibrator contacts, and filtered, providing outputs as high as 400 volts at 200 ma. The high-voltage filter circuit usually is identical with that of an equivalent power source operating from the a.c. line. Noise suppression equipment, serving to minimize r.f. disturbances caused by the vibrator, is incorporated in manufactured units.

Although vibrator supplies are ordinarily used with 6-volt tubes, their use with 2-volt tubes is quite possible provided additional filament filtration is incorporated. This filter can consist of a small low-resistance iron-core choke, or the voice-coil winding of a speaker transformer. The field coil of a speaker designed to operate on 4 volts at the total filament current of the receiver may be used. The filaments are then connected in parallel, as usual, and placed in series with this winding across the 6-volt battery. In both 6- and 2-volt receivers, "hash" can be reduced by heavily by-passing the battery at the vibrator supply terminals, using fixed condensers of 0.25 to 1 μfd. capacity or more, and by including an r.f. choke in the battery lead near the condenser. Noise will be minimized if a single ground, consisting of a short, heavy copper strap, is used. Thorough shielding also will contribute to the noise reduction.

Table II lists standard commercial vibrator supplies suitable for use as emergency or portable power sources. Some of these units include a hum filter, while others do not. The design of a suitable filter is, for the most part, conventional, however. The vibrator supplies used with automobile receivers are satisfactory for receiver applications and for use with transmitters where the power requirements are small.

The efficiency of vibrator packs runs between about 60 to 75 per cent.

Dynamotors and genemotors — A dynamotor is a double-armature high-voltage generator, the additional winding serving as a driving motor. Dynamotors usually are operated from 6-, 12- or 32-volt storage batteries, and deliver output voltages from 300 to 1000 or more.

The genemotor is a refinement of the dynamotor, designed especially for automobile receiver, sound truck and similar applications. It has good regulation and efficiency, combined with economy of operation. Standard models of genemotors have ratings ranging from 135 volts at 30 ma. to 300 volts at 200 ma. or 500 volts at 200 ma., as can be seen from Table III. The normal efficiency averages around 50 per cent, increasing to better than 60 per cent in the higher-power units. The voltage regulation of a genemotor is comparable to that of well-designed a.c. supplies.

Successful operation of dynamotors and genemotors requires heavy, direct leads, mechanical isolation to reduce vibration, and thorough r.f. and ripple filtration. The shafts and bearings should be thoroughly "run in" before regular operation is attempted, and thereafter the tension of the bearings should be checked occasionally.

A.c.-d.c. converters — In some instances it is desirable to utilize existing equipment built for 115-volt a.c. operation. To operate such equipment with any of the power sources outlined above would require a considerable amount of rebuilding. This can be obviated by using a rotary converter capable of changing the d.c. from 6-, 12- or 32-volt batteries to 110-volt 60-cycle a.c. Such converter units are built with output ratings ranging from 40 to 300 watts.

The conversion efficiency of these units averages about 50 per cent. In appearance and operation they are similar to genemotors of equivalent rating. The over-all efficiency of the converter will be lower, however, because of losses in the a.c. rectificer-filter circuits and the necessity for converting heater as well as plate power.

TABLE I—BATTERY SERVICE HOURS

Estimated to 34-volt end-point per nominal 45-volt section.
Based on intermittent use of 3 to 4 hours daily.
(For batteries manufactured in U. S. A. only.)

Manufacturer's Type No.	Weight		Current Drain in Ma.											
Eveready	Lb.	Oz.	5	10	15	20	25	30	40	50	60	75	100	150
386	14	—	2000	1100	690	510	400	320	200	170	130	100	50	30
486	13	5	1700	880	550	395	300	240	165	125	100	70	45	20
586	12	2	1400	800	530	380	260	185	130	85	60	40	30	14
585	8	13	900	450	290	210	130	100	60	45	25	20	11	5
762	3	3	320	140	81	54	37	27	—	—	—	—	—	—
482	2	—	320	140	81	54	37	27	—	—	—	—	—	—
738	1	2	160	70	30	20	10	7	—	—	—	—	—	—
733	—	10	50	20	11	7	5.2	—	—	—	—	—	—	—
455[1]	—	8.6	70	20	11	7	5.2	—	—	—	—	—	—	—

[1] Same life figures apply to 467, 67½-volt, 10.5 oz.

Estimated to 1-volt end-point per 1.5-volt unit.
Based on intermittent use of 3 to 4 hours daily.
(For batteries manufactured in U. S. A. only.)

Manufacturer's Type No.	Weight		Voltage	Current Drain in Ma.										
Eveready	Lb.	Oz.		50	60	120	150	175	180	200	240	250	300	350
A-1300	8	4	1.25				2000	1715	1500	1333	1250	1200	1000	854
740	6	12	1.5				1400	1200		1050		775	625	
741[1]	2	14	1.5		1100	750				375	300	275	215	175
743	2	1	1.5		750	325				245		180	135	110
7111	2	2	1.5		700	320			200		120		90	
742	1	6	1.5		500	325			155	135	100	95	85	50
A-2300	15	8	2.5				2000	1715	1500	1333	1250	1200	1000	854
723	1		3.0		240	100			70		40		30	
746	1	3	4.5	200										
718[2]	3		6.0	375										

[1] Same life figures apply to 745, wt. 3 lbs.

[2] Same life figures apply to 747, wt. 3 lbs.

TABLE II—GASOLINE-ENGINE-DRIVEN GENERATORS, AIR-COOLED

Manufacturer				Output		Weight	Starter
Eicor	Kato	Onan	Pioneer	Volts	Watts	Lbs.	
3AP6[1]			BD-6[1]	110 a.c. or 6 d.c.	300 200	100	Push-button
	JR-35[2]			110 a.c.	300	65	Push-button
	JRA-3[2]			110 a.c.	350	65	Rope crank
	19-A			110 a.c. or 6 d.c.	350 200	95	Push-button
		358[1,3]		115 a.c.	350	91	Push-button
	JR-10[2]			110 a.c.	400	——	Rope crank
		5L[3]		110 a.c.	500	165	Push-button
	23A			110 a.c. or 6 d.c.	500 200	105	Push-button
6AP1	14A		BA-6[1]	110 a.c.	600	135	Push-button
		7L[3]		115 a.c.	750	195	Push-button
10AP1		10L[3,4]	BA-10[1]	110 a.c.	1000	170	Push-button
	26A			110 a.c.	1000	265	Manual
		OTC		110 a.c.	1500	135	Manual
			BA-15	110 a.c.	1500	365	Push-button

[1] Also available in remote-control models.
[2] Intermittent-duty model.
[3] Also available in manual-started type.
[4] 115-volt output; weight 200 lbs.

TABLE III—VIBRATOR SUPPLIES

Manufacturer's Type Number				Output		Rectifier	Output Filter
American Television and Radio Co.	Electronic Labs	Mallory	Radiart	Volts	Ma.		
VPM-F-7				90	10	Syn.	Yes
		VP-551[1]		125–150–175–200	100 max.	Syn.	No
			4201B[2]	250	50	Syn.	Yes
		VP-540		250	60	Syn.	Yes
			4204F[3]	100–150–250	35–40–60	Syn.	Yes
	605			150–200–250–275	35–40–50–65	Syn.	No
	604[4]	VP-552[5]		225–250–275–300	50–65–80–100	Syn.	No
			4201[6]	150–200–250–275–300	35–40–50–70–100	Syn.	No
	251[7]			300	100	Tube	Yes
		VP-555		300	200	Tube	Yes
VPM-6[8]	311[9]			250–275–300–325	50–75–100–125	Tube	Yes
		VP-557		400	150	Tube	Input cond.
			4202D	300–400	200–150	Tube	Yes
	606[10]			325–350–375–400 and 110 a.c. 60 cycle	125–150–175–200 20 watts	Tube	Input condenser

All inputs 6.3 volts d.c. unless otherwise noted.

[1] VP-553 same with tube rectifier.
[2] In weatherproof case. 4201B2 same with tube rectifier.
[3] 180-cycle vibrator, lightweight. 4204 same without filter.
[4] 601 same with tube rectifier; 602 same except 12 v. d.c. input and tube rectifier; 603 same except 32 v. d.c. input and tube rectifier.
[5] VP-554 same with tube rectifier; VP-G556 same except 12 v. d.c. input; VP-F558 same except 32 v. d.c. input.
[6] 4200D same with tube rectifier; 4200DF same with tube rectifier and output filter.
[7] 551 same with 12 v. d.c. input.
[8] Also available without filter.
[9] 511 same except 12 v. d.c. input.
[10] Input 6 v. d.c. or 110 v. a.c., 607 same except 12 v. d.c. or 110 v. a.c. input; 608 same except 32 v. d.c. or 110 v. a.c. input; 609 same except 110 v. d.c. or 110 v. a.c. input.

TABLE IV—DYNAMOTORS

Manufacturer's Type No.			Input		Output		Weight
Carter	Eicor	Pioneer	Volts	Amps.	Volts	Ma.	Lbs.
135A			6	1.8	135	30	6½
180A			6	2.2	180	30	6½
240A			6	3.3	200	40	6½
210A			6	6.3	200	100	6½
220A			6	13	200	200	6½
250A	102[1]	E1W272[2]	6	5	250	50	6½
251A		E1W339[3]	6	9	250	100	6½
277A			6	6	275	75	6½
301A	106[4]	E2W351[5]	6	9.7	300	100	6½
315A	158[6]	E2W243[5]	6	15	300	150	7⅞
320A		RAOW158[7]	6	19	300	200	9½
351A			6	10	350	100	6½
355A	108	E2W256[5]	6	15	350	150	7⅞
352A			6	22	350	200	9½
401A			6	13	400	100	7⅞
		E2W438	6	14.2	400	125	9¼
415A	109[8]		6	20	400	150	7⅞
420A			6	25	400	200	9½
425A		RA1W201[9]	6	30	400	225	9½
450A	110[10]		6	33	400	250	9½
		E3W413	6	15	500	100	11
515A	111[11]		6	24	500	150	9½
520AR		RA1W189[12]	6	33	500	200	——

[1] Input current 4.6 amp.; wt. 4⅝ lbs.
[2] Wt. 7½ lbs.
[3] Input current 7.5 amp.; wt. 7½ lbs.
[4] Wt. 5 lbs.
[5] Wt. 9¼ lbs.
[6] Input current 14 amp.; wt. 5¾ lbs.
[7] Wt. 16 lbs.; input current 18 amp.
[8] Input current 17 amp.
[9] Wt. 17½ lbs.; input current 25 amp.
[10] Input current 27.5 amp.; wt. 7⅝ lbs.
[11] Input current 21.5 amp.; wt. 7⅝ lbs.
[12] Input current 27 amp.; wt. 17½ lbs.

Construction of Power Supplies

With the possible exception of control stations, which in many instances will be installed at locations where emergency power already is provided for, WERS stations will have to be furnished with a type of power supply independent of the a.c. mains. The 6-volt automobile-type storage battery is by far the best choice for primary power, and while dynamotors, genemotors, converters, and complete vibrator-type "B" supplies cannot now be purchased new, it is not difficult to remodel an old receiver-type power transformer for use in a vibrator supply. Furthermore, the power supply in a car radio receiver can be pressed into service if necessary. Aside from the vibrator and transformer (and rectifier tube, if one is used), most of the components can be found in old b.c. receivers or existing amateur equipment.

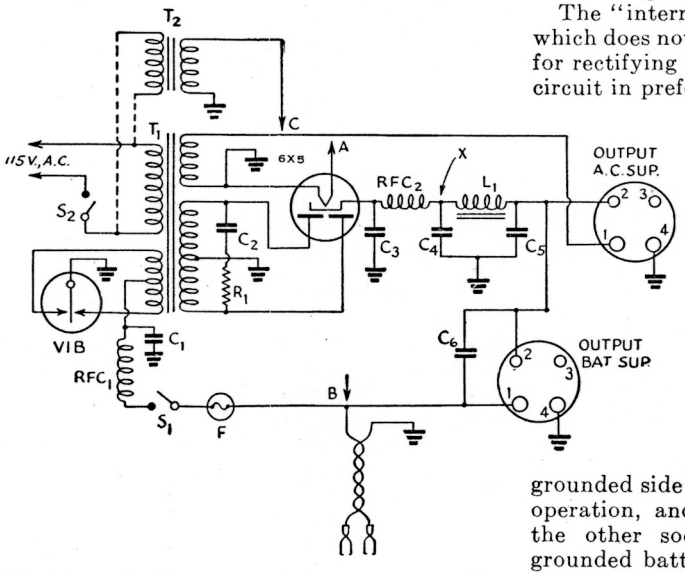

Fig. 1640 — Combination 115-volt and battery supply.

C_1 — 0.5-μfd. paper, 50-volt rating or higher.
C_2 — 0.005 to 0.01 μfd., 1600 volts (see text).
C_3 — 0.01-μfd. 600-volt paper.
C_4 — 8-μfd. 450-volt electrolytic.
C_5 — 32-μfd. 450-volt electrolytic.
C_6 — 100-μμfd. mica.
L_1 — 10–12 henry 100 ma. filter choke, not over 100 ohms (Stancor C-2303 or equivalent).
R_1 — 5000 ohms, ½- or 1-watt.
RFC_1 — 55 turns No. 12 on 1-inch form, close-wound.
RFC_2 — 2.5-mh. r.f. choke.
S_1 — S.p.s.t. toggle switch, heavy duty (10–12 amp.).
S_2 — S.p.s.t. toggle switch.
F — 15-ampere fuse.
VIB — Mallory 500P, 294, etc.
T_1 — Special vibrator transformer with 115-volt and 6-volt primaries, to give approximately 300 volts at 100 ma. d.c. (Stancor P-6166 or equivalent).
T_2 — 6.3-volt filament transformer, to be used when 6.3-volt filament winding on T_1 will not supply all heaters in both transmitter and receiver.
X — Insert a series resistor of suitable value to drop the output voltage to 300 at 100-ma. load, if necessary. If transformer gives over 300 volts d.c., a second filter choke may be used to give additional voltage drop as well as more smoothing.
NOTE — All ground connections should be made to a single point on the chassis.

It must be emphasized again that no dependence should be placed on the continuance of power from the ordinary 115-volt lines during an emergency. An a.c. supply can be used for routine testing, of course, and also during an actual emergency so long as the line power lasts, but some independent source of power *must* be available.

Combination supplies — In a vibrator supply built from individual components it is necessary to filter out hash and to adjust the wave-form to minimize sparking at the vibrator contacts. When such a supply is built around a manufactured transformer it is advisable to use the type which has both 115-volt and 6-volt primaries, thereby making an a.c.-d.c. supply which uses the minimum of parts for both purposes. Such transformers have been made in various ratings. A suitable circuit diagram is given in Fig. 1640.

The "interrupter" type of vibrator, or one which does not also have synchronous contacts for rectifying the high voltage, is used in this circuit in preference to the synchronous type, since the rectifier tube is needed for straight a.c. operation. The change between a.c. and battery supply is made by providing duplicate rectifier and output sockets, the heater voltage being supplied by the transformer in the one case and by the storage battery in the other. Switches could be used for the same purpose. "A" in the diagram indicates that the ungrounded heater lead on one 6X5 rectifier socket is connected to the ungrounded side of the filament winding for a.c. operation, and "B" that the same lead on the other socket is connected to the ungrounded battery lead. All other connections on the two sockets are paralleled. If the 6.3-volt filament winding is not rated for the total heater load, another 6.3-volt transformer may be used as shown.

Getting the right capacity for the buffer condenser, C_2, is of first importance. Under no circumstances can this condenser be omitted, since without it there will be excessive sparking at the vibrator contacts and the vibrator life will be short. Proper values usually are between 0.005 and 0.01 μfd., the condenser being rated to withstand at least 1600 volts. The optimum value of capacity can be determined by trial, observing the vibrator sparking as the capacity is changed. For this purpose it is advantageous to use the type of vibrator which is mounted in a large tin can since this type is easily taken apart, the top and base being held together by a few spots of solder which can be easily softened. The more compact type having a narrow metal can crimped around a bakelite base can be pried apart, but this type is difficult to reassemble.

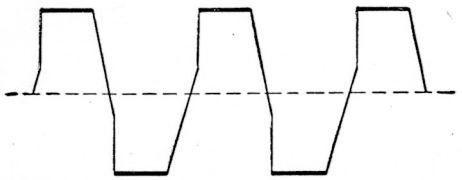

Fig. 1641 — Proper operation of the vibrator supply is indicated when an oscillogram such as is shown above is obtained with the vertical plates of the oscilloscope connected across the total primary winding. The dashed reference line in the center will not appear on the screen.

When the system is operating properly there should be practically no sparking at the vibrator contacts. There may be an intermittent spark of small amplitude, barely visible in daylight, but nothing resembling a continuous arc. A further check on the operation can be secured with an oscilloscope having a linear sweep circuit that can be synchronized with the vibrator. The vertical plates should be connected across the outside ends of the transformer primary winding to show the input voltage waveshape. Fig. 1641 shows an idealized trace of the optimum waveform when the buffer capacity is adjusted to give proper operation throughout the life of the vibrator. The horizontal lines in the trace represent the voltage during the time the vibrator contacts are closed, which should be approximately 90 per cent of the total time. When the contacts are open the trace should be partly tilted and partly vertical, the tilted part being 60 per cent of the total connecting trace. The oscilloscope will show readily the effect of the buffer capacity on the percentage of tilt. In actual patterns the horizontal sections are likely to droop somewhat because of the characteristics of the vertical amplifier in the 'scope and also because of the resistance drop in the battery leads as the current builds up through the primary inductance.

The 5000-ohm resistor in series with the buffer condenser in the diagram limits the secondary current in case the condenser fails.

R.f. filters for reducing hash are incorporated in both primary and secondary circuits. The secondary filter consists of a 0.01-μfd. paper condenser directly across the rectifier output, with a 2.5-mh. r.f. choke in series ahead of the smoothing filter. In the primary circuit a low-inductance choke and high-capacity condenser are needed because of the low impedance of the circuit. A choke of the specifications given should be adequate, but if there is trouble with hash it may be beneficial to experiment with other sizes. The wire should be large — No. 12, preferably, and No. 14 as a minimum. Manufactured chokes such as the Mallory RF583 are more compact and give higher inductance for a given resistance because they are bank-wound, and may be substituted if obtainable. C_1 should be at least 0.5 μfd.; even more capacity may help in bad cases of hash.

The power supply should be built on a metal chassis, with all unshielded parts underneath. A bottom plate to complete the shielding is advisable. The transformer case, vibrator case and metal shell of the tube all should be grounded to the chassis. If a glass tube is used it should be enclosed in a tube shield. The battery leads should be evenly twisted, since these leads are more likely to radiate hash than any other part of a reasonably well-shielded supply. A little care in this respect usually is more productive than experimenting with different values in the hash filters. Such experimenting should come *after* it has been found that radiation from the leads has been reduced to an absolute minimum. Shielding the leads is not particularly helpful.

The 100-$\mu\mu$fd. mica condenser, C_6, connected from the positive output lead to the "hot" side of the "A" battery, may be helpful in reducing hash in certain power supplies. A trial is necessary to see whether or not it is required. It should be mounted right on the output socket.

Testing for methods of eliminating hash should be carried out with the supply operating a receiver. Since the interference usually is picked up on the receiver antenna leads by radiation from the supply itself and the battery leads, it is advisable to keep the supply and battery as far from the receiver as the connecting cables will permit. Three or four feet should be ample. The microphone cord likewise should be kept away from the supply and leads.

The smoothing filter for battery operation can be a single-section affair, but there will be some hum (readily distinguishable from hash because of its deeper pitch) unless the filter output capacity is fairly large — 16 to 32 μfd.

Rewinding transformers — Those who cannot get either complete vibrator assemblies or special transformers, or who want to assemble a vibrator supply at the least possible expense, can find many of the necessary parts in old broadcast receivers. A power transformer

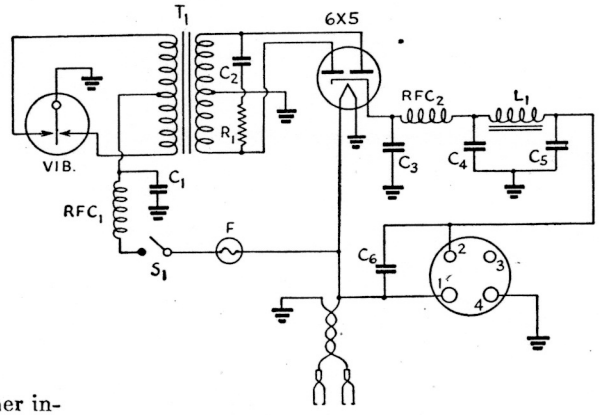

Fig. 1642 — Vibrator power-supply circuit diagram. Except for T_1 and T_2, all components are identical with those of Fig. 1640. T_1 may be either a regular 6-volt input vibrator-type power transformer or a home-altered 115-volt receiver transformer as described in the text.

with a 100-milliampere secondary is needed; the voltage rating should be 350 or so with any transformer of this type, but the exact value does not matter too much. The high-voltage secondary must be in good shape. Pick out a transformer with a case — one of the "fully shielded" type — but not one immersed in pitch. The receiver usually will have a filter choke or two as well as filter condensers which may be usable.

Before dismantling the transformer, measure the output voltages of the windings if these are not already known. This will require a multirange a.c. voltmeter. If the builder does not have such an instrument, the measurements can be made by a radio repairman or at the local parts store.

Next take the transformer apart, being careful to avoid damaging the windings or bending the core pieces. The filament secondaries are nearly always on the outside of the coil assembly, so remove the outer layers of paper to expose the uppermost filament winding. Count the number of turns and divide this figure by the output voltage of the winding to find the number of turns per volt. Most small transformers have about three turns per volt. Make a note of the exact figure and then remove the remaining filament secondaries, leaving only the primary and high-voltage secondary.

When this has been done, slide one of the core pieces inside the coil and see how much space has been made available by removing the low-voltage secondaries. The battery primary to be put on will not have many turns, but the wire should be large to keep the losses low, so generally two layers will be required.

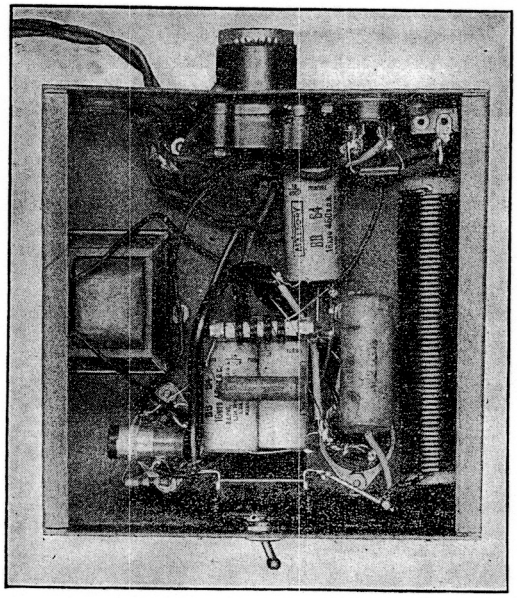

Fig. 1643 — Below-chassis view of a storage-battery power supply using a rewound transformer. The circuit is given in Fig. 1642. The various components can be easily recognized in this view. The transformer, vibrator and rectifier tube are mounted on top of the chassis.

The current to be carried will be in the vicinity of 8 amperes at full load, but since the primary is to be center-tapped each half of the winding carries current only half the time. Thus the heating effect is equivalent to 4 amperes. No. 12 wire is suitable, but is probably more conservative than is necessary; No. 14 will not get too warm and the losses should not be appreciably greater. It would not be advisable, however, to use smaller wire than No. 16, and that size only when a larger size will not fit the space. If the space still is too small, remove the 115-volt primary.

If the normal transformer output was about 300 volts at 100 milliamperes through an ordinary filter (this should be ascertained before taking the transformer apart, by hooking up a power supply and making a d.c. measurement) it is useful to save the old primary if possible, since such a transformer can be used for a combination a.c.-battery supply. However, it does not pay to save the old 115-volt primary at the expense of using too-small wire on the 6-volt primary; the efficiency and regulation will be better with larger wire sizes.

Whether the old primary is inside or outside the high-voltage secondary is a matter of chance. If the old primary is on the inside and it is necessary to remove it, the job can be done by pulling the outermost layer through the side of the assembly, after which the rest can easily be unwound. One half of the new primary should be wound directly on the insulating sleeve into which the core fits, then the high-voltage secondary slipped over it, and finally the second half of the new primary wound on top. Both halves should be wound in the same direction so that the end of the first half can be connected to the beginning of the second to give a center tap with the proper polarities. If separate leads are brought out from each half (this is usually the most convenient method) it is easy to check the polarities after the transformer is reassembled. Connect two leads together for trial, then apply 115 volts across the high-voltage winding. If the voltage across the outer ends of the new winding is twice the voltage across each half, the polarity is correct. A filament voltmeter should be used for this check, since the voltage is low.

To obtain 300 volts at the rated current of 100 ma. from the supply, using a 6X5 rectifier and a filter having a choke with a resistance of about 100 ohms, the secondary/primary turns ratio should be 70:1, assuming an even 6 volts from the storage battery. Multiply the original a.c. output voltage of the high-voltage secondary by the number of turns per volt to find the total number of turns, then divide the product by 70 to find the proper number of turns for the primary. For example, if the output voltage was known or measured to be 750 volts a.c. (375 each side of center-tap) and the transformer had three turns per volt, the total number of secondary turns is 750 $\times$ 3,

or 2250. Dividing 2250 by 70 gives 32 (dropping the fraction) as the total primary turns, or 16 each side of the center-tap.

The new windings should be sufficiently well insulated so that there is no possibility of a short-circuit to the core or secondary, but otherwise no special precautions are necessary since the voltage is low. Reassemble the transformer, interleaving the laminations. It is advisable to use no more than two laminations on a side before interleaving from the other side, but it is not necessary to interleave them singly. With careful packing it should be possible to get back all of the core pieces.

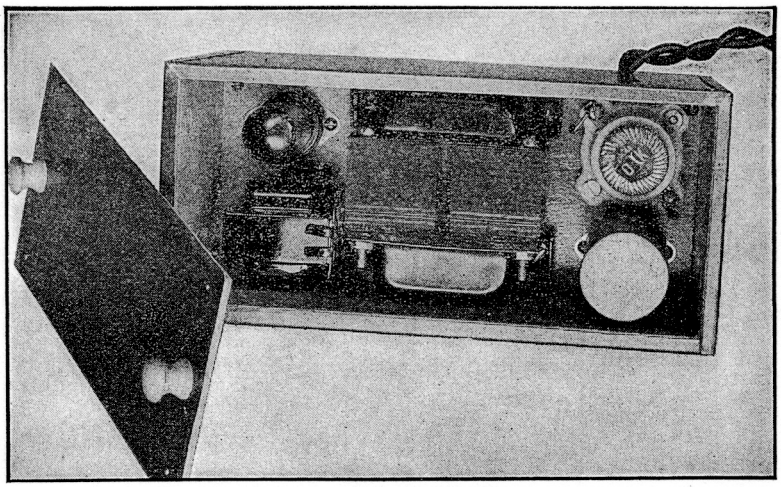

Fig. 1644 — A view inside the vibrator-type power-supply unit shown assembled in Fig. 1632. The rectifier tube is at the upper left with the filter choke just below. The primary fuse socket and vibrator are at the right. A synchronous-type vibrator may be substituted for the interrupter-type if it is desired to eliminate the rectifier tube.

Once the transformer is rebuilt, the remainder of the supply is constructed and adjusted as previously described. If the job has been done properly the efficiency should be about normal for vibrator supplies. Individual transformers have been found to vary somewhat, in that for an output of 100 ma. at 300 volts the battery current ranges from 7.5 to 9 amperes with the different units. This does not include the current taken by the rectifier heater. Because of this current and the power loss in the plate-cathode circuit of the rectifier tube, the over-all efficiency of the tube rectifier type of supply is not quite as high as with the synchronous vibrator. With no load on the supply the battery current should be about 1.5 amperes.

Low-voltage supply — A vibrator supply for operation at lower voltage (in the vicinity of 200 volts d.c.) is shown in Figs. 1644 to 1646. This is especially suitable for use with the transceiver previously described when a 6J5 oscillator tube is used, or for commercial dry-battery transceivers modified to permit connecting an external power supply.

The transformer is a universal replacement-type unit having a d.c. output, when operated from 115 volts a.c., of about 70 ma. at 250 to 300 volts, and provided with 6.3-, 5- and 2.5-volt filament windings. The circuit is much the same as in the case of the homemade units just described. As shown in the circuit diagram, Fig. 1645, the filament windings on the transformer are used in the battery circuit; the 6.3-volt winding provides one side of the battery primary, and the other side consists of the 5-volt winding in series with half the 2.5-volt winding. This method gives lower output voltage than can be obtained with a properly proportioned primary, but avoids the inconvenience of rewinding the transformer. The output voltage is about 200 with a load of 60 ma.

Before the battery primary is permanently connected, the proper polarities of the filament windings must be determined. Apply line

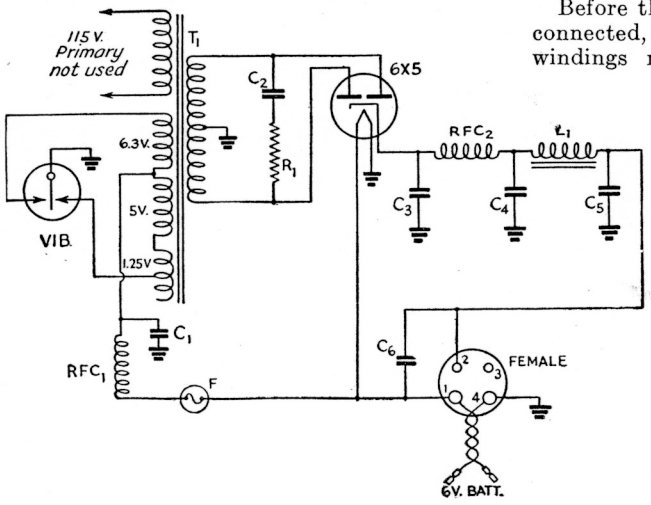

Fig. 1645 — Circuit diagram of the low-voltage vibrator-type power-supply unit.
C_1 — 0.5-μfd. paper, 200 volts.
C_2 — 0.008-μfd. paper, 1600 volts.
C_3 — 0.01-μfd. paper, 600 volts.
C_4 — 8-μfd. electrolytic, 300 volts.
C_5 — 16- to 32-μfd. electrolytic, 300 volts.
C_6 — 100-μμfd. mica.
R_1 — 5000 ohms, 1 watt.
L_1 — 10-henry 60-ma filter choke.
RFC_1 — 52 turns of No. 12, close-wound on 1-inch diameter form.
RFC_2 — 2.5-mh. r.f. choke.
T_1 — Power transformer, 300 volts each side of c.t., 60 to 70 ma.; with 6.3-, 5- and 2.5-volt windings. 115-volt primary is unused.
F — 10-ampere fuse.
VIB — Vibrator (Mallory 294, etc.).

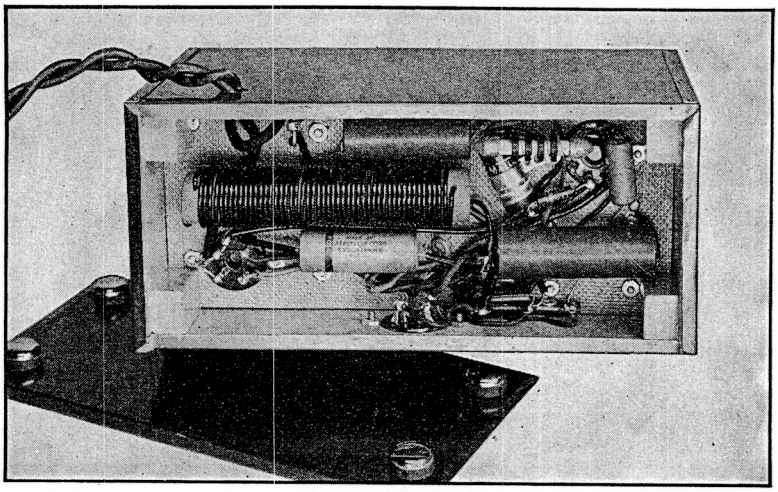

Fig. 1646 — Hash and smoothing filter components are mounted in the bottom of the low-voltage vibrator power supply. The 4-prong outlet socket is mounted on the side.

voltage to the regular 115-volt primary and connect the 6.3- and 5-volt windings in series. Measure the total voltage across the two. If it is something over 11 volts the polarity is correct, but if the voltage is very low the connections to one of the windings should be reversed. Then add half the 2.5-volt winding to the 5-volt winding and measure the voltage across these two in series. It will be between 6 and 7 volts when the polarities are correct. The connection between the 6.3- and 5-volt windings becomes the center-tap of the battery primary, as shown in the diagram.

All the components in the supply with the exception of the 4-prong outlet socket are mounted on a piece of quarter-inch tempered Masonite measuring $3\frac{3}{4} \times 9$ inches. This fits into a plywood box having inside dimensions ($3\frac{3}{4} \times 9 \times 5\frac{1}{2}$ inches) just large enough to contain the equipment. The Masonite shelf rests on $\frac{3}{4}$-inch square blocks, $1\frac{1}{4}$ inches long, glued to the corners of the box at the bottom. The top and bottom of the box are removable. To provide shielding and thus reduce hash troubles, the box is covered with thin iron salvaged from 5-quart oil cans. Where the edges bend around the box to make a joint, the lacquer is rubbed off with steel wool so the pieces make electrical contact, and the metal is tacked to the plywood with escutcheon pins.

To make sure that the shielding will be complete, the top and bottom of the box slide into place from the side, with the metal covering extending out so that it fits tightly under a lip bent over from the metal on the sides. These lips also are cleaned of lacquer to permit good electrical contact. The general construction should be quite apparent from the photographs. The bottom is provided with rubber feet, and the top has a small knob at each end so that it can be pushed out. This is essential, since the fit is good and there is no way to get either the top or bottom off, once on, without having some sort of handle to grip.

¶ Antenna Systems

In many cases, particularly at control stations, it will be necessary to use non-directive antennas because of the necessity for working field stations at random points of the compass. At field stations which normally work with only a single control station, however, it may be advantageous to use a simple form of directive array. The power gain will be worth while in bettering the signals in both directions, and in addition will minimize interference to and from other networks. The simpler forms of antennas described in Chapters Ten and Seventeen are quite suitable for WERS work.

More important, perhaps, than the antenna itself is its location. Every effort should be made to get the antenna well above its surroundings and to provide, whenever possible, a clear path between the control station and the network stations with which it must communicate. Having a line of sight between antennas will ensure successful communication even though the power is very low and the antenna itself is nothing more than a simple half-wave wire. Where there are intervening obstructions, it will be helpful to use as much height as possible.

Vertical polarization is to be preferred to horizontal, since vertical polarization is better suited to mobile operation. A simple vertical antenna has practically no horizontal directivity, therefore it will work equally well in all directions except for effects attributable to its surroundings and to the terrain over which the signal must travel. The signal strength will be poor if a horizontally polarized antenna is used to receive a vertically polarized signal.

A half-wave antenna, two half waves fed in phase stacked vertically, or an extended double Zepp, all will be satisfactory in WERS, and are very simple types to construct. Design details will be found in Chapter Ten. If the station is to be operated on a fixed frequency, the antenna length should be adjusted for that frequency. If the same antenna is to work on several frequencies, the length had best be chosen midway between the two extremes.

Transmission Lines — At nearly all fixed locations it will be necessary to use a transmission line between the antenna and the radio equipment, since the latter will be indoors where it is easily accessible while the former will be placed on the roof of the building to secure adequate height. Low-loss concentric

line is ideal for working into the center of a half-wave antenna, but there is little likelihood it can be obtained except in isolated instances. The alternative is an open-wire line having an impedance of 500 to 600 ohms. It is advisable to keep the spacing between wires small, to prevent radiation loss; 2-inch spacing is about right, provided the line can be installed fairly rigidly so that it will not swing in a breeze and cause the transmitter frequency to change. This close separation also requires a fairly large number of spacers — at intervals of perhaps three to four feet. Lacking more suitable materials, the spacers may be made of two-inch lengths of quarter- or half-inch wooden dowel or cut pieces of square section (preferably of maple), boiled in paraffin to make them waterproof. In paraffining the wood, take care that the temperature does not get high enough to scorch it. Such spacers will provide adequate insulation at the power levels permitted for WERS transmitters. Spacers may also be cut from scrap bakelite panels.

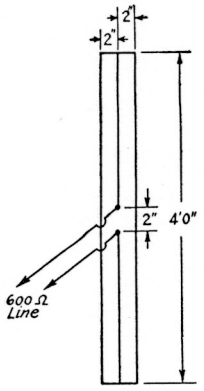

Fig. 1647 — Three-wire folded-doublet antenna for matching a 600-ohm line. The three conductors are connected together at the ends, as indicated. They may be made of wire, rod or tubing, and can be mounted on stand-off insulators on a wooden support.

To make such a line non-resonant it will be necessary to install a matching stub at the antenna. The design and adjustment of such stubs also is covered in Chapter Ten. As an alternative, a multi-wire doublet antenna may be used to couple directly to a line having an impedance of the order of 500 to 600 ohms without special matching provisions. Such an antenna is shown schematically in Fig. 1647. It gives a 9-to-1 impedance step up at the line terminals, hence practically automatic matching to a 600-ohm line, assuming the normal doublet impedance of 70 ohms. In addition, it has a broad resonance characteristic and thus is well suited to working anywhere in the band.

To avoid the necessity for impedance matching, two-wire lines may be operated as tuned lines if desired. Such operation has been successful with lines up to at least 100 feet long. Since in most cases the coupling device at the transmitter or receiver is a single-turn coil, the simplest method of tuning the line is to adjust the feeder length until the current in the line is maximum when the transmitter is operating on the chosen frequency. A small dial light or flashlight bulb, connected in series with one side of the line right at the transmitter terminals, may be used as a current indicator. The transmission line should be made about four feet longer than necessary, its length being adjusted by cutting off an inch or two at a time until maximum bulb brilliancy is obtained.

From a constructional standpoint it is desirable to use the same antenna for both transmitting and receiving. The change-over switch for this purpose should have low capacity, and preferably should have low-loss insulation. The ordinary type of wafer switch is satisfactory, particularly if it is ceramic insulated. A small porcelain-base d.p.d.t. knife switch also may be used for this purpose. If possible, the antenna switch should be combined mechanically with the power-supply change-over switches for the transmitter and receiver so that all the necessary switching from transmission to reception can be done in one simple operation.

Mobile antennas — It is probable that most WERS networks will have one or more stations installed in cars, for dispatching to points which may be in urgent need of communication. The equipment previously described is readily adaptable to car installations; the transceiver, in particular, can be set up with little difficulty, and can get its power from the car broadcast receiver, if there is one. This would require only the installation of a suitable power socket in the car receiver, together with a switch to cut the power from the receiver when the transceiver is in use.

As in the case of antennas for the fixed stations, it is important that the car antenna be mounted as high as possible, to avoid screening effects of the car and to give maximum range. If the antenna cannot be mounted so that it is entirely above the top of the car, it can still be made to have a major portion of its length above the roof. Roadsters and coupés have a convenient spot for mounting the antenna on the deck in back of the rear window. The lead-in can be brought into either the luggage compartment or the driver's seat, depending upon the location of the radio gear. Sedans lend themselves more readily to mounting the antenna alongside the hood, or on the roof.

Either a quarter- or half-wave antenna may be used, depending upon conditions. The greater length of the latter will lead to better results, if the installation can be made conveniently. Flexible metal rod is generally used, so that the antenna will be self-supporting.

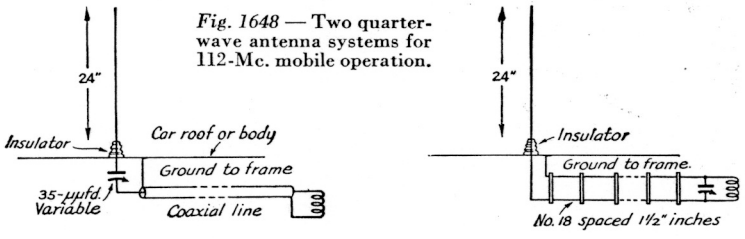

Fig. 1648 — Two quarter-wave antenna systems for 112-Mc. mobile operation.

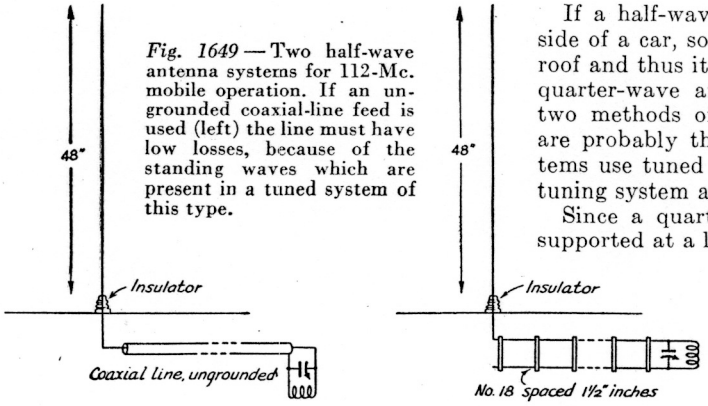

Fig. 1649 — Two half-wave antenna systems for 112-Mc. mobile operation. If an ungrounded coaxial-line feed is used (left) the line must have low losses, because of the standing waves which are present in a tuned system of this type.

If a quarter-wave antenna is to be mounted permanently on the car it should be located on the roof, otherwise it is likely that the radiation pattern will be quite irregular. The resulting directional effects will be a help on some occasions but a definite hindrance on others. The antenna can be fed by a tuned line or by a coaxial line, as shown in Fig. 1648. The coaxial line feed can be checked by observing its detuning effect on the transmitter — a good match will have been obtained when the detuning is a minimum. The antenna length should be about 22 to 24 inches, and this length and the capacity of the condenser should be varied until connecting the other end of the line to the transmitter causes a minimum of frequency change. Loading is controlled at the transmitter by adjusting the coupling coil, *not* by varying the condenser at the antenna. The coaxial line can be of the 70- or 100-ohm type.

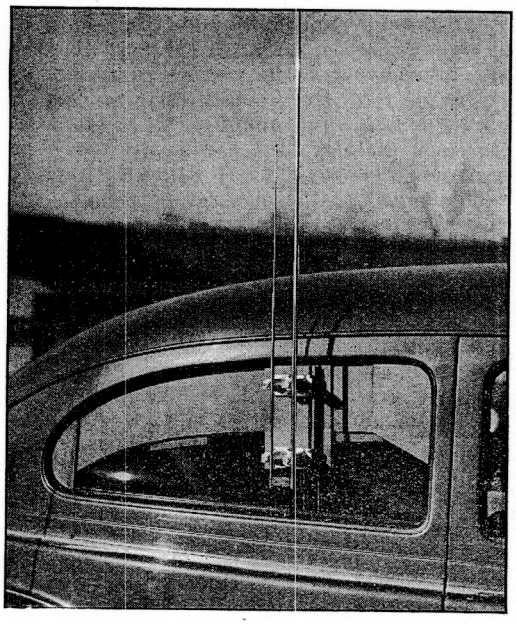

Fig. 1650 — A J-type antenna for 112-Mc. mobile operation can be mounted easily in the window of a car, allowing the radiator proper to be placed above the roof of the vehicle. The dimensions are given in Fig. 1651.

If a half-wave antenna is mounted on the side of a car, some of it will extend above the roof and thus it will give better results than a quarter-wave antenna similarly placed. The two methods of feeding shown in Fig. 1649 are probably the most convenient. Both systems use tuned feed lines, and thus require a tuning system at the transmitter end.

Since a quarter-wave antenna normally is supported at a low-voltage point, hard rubber insulators are satisfactory. However, a half-wave antenna will usually be supported at a high-voltage point and thus requires good insulation for best efficiency. Ceramic insulators usually can be obtained to fit any case. It is wise not to skimp on size because of the greater chance of breakage with the smaller units. The feed-through types and the stand-off types with metal base rings are least likely to break.

For a solid but easily detachable mounting, the arrangement shown in Fig. 1650 is suggested. It is held in place by a panel of wood, cut to the shape of the window, on which the antenna is mounted. By running up the window the panel is held firmly in place. The antenna is of the "J" type, shown in Fig. 1651. This type of installation places the radiator proper above the roof of the car, and has the advantage that it can be readily removed from the car when not in use or when needed elsewhere.

The unit shown is built of ¼-inch plywood, since the usual thickness of the window glass in cars is ¼ inch. Run down the window of the car about half way, or enough to leave at least a 6-inch opening, and make a pattern of cardboard using the top edge of the window glass for the guide. Trim the cardboard to this shape, and then push it up in the window and use the edge of the glass to mark the bottom edge of the pattern. From the pattern, mark the piece of plywood and cut it out with a saw. Additional small pieces to form stops in the corners are fastened to the main piece with glue and brads. A piece of plywood about 6 × 8½ inches should be fastened to the large piece at the point where the antenna is to be supported, using glue and brads, and the four stand-off insulators which support the antenna bolted to this piece. If the insulators are not long enough for the antenna to clear the side of the car, they can be raised by wood strips.

Two small strips should be nailed along the inside of the main piece so that they extend down below the edge a few inches and form, with the outside pieces, a yoke to keep the assembly in the proper position on the window.

The feeder can be made of flexible rubber-covered wire (obtained by splitting a length of parallel lamp cord) separated by small plastic or dry wood spacers. The antenna ends of the wires are soldered to the heads of the large bolts in the upper stand-off insulators, and the wire is run out through holes in the wood.

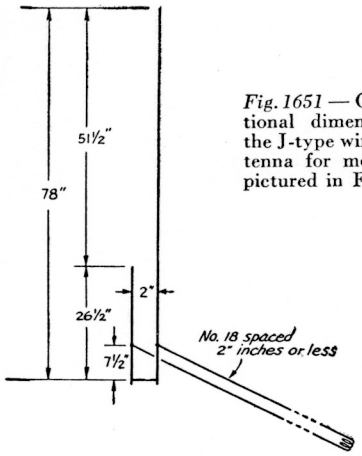

Fig. 1651 — Constructional dimensions of the J-type window antenna for mobile use pictured in Fig. 1650.

The antenna and matching-section rods are regular automobile whip antennas and are supported on the stand-off insulators by small loop-shaped metal clamps. The shorting bar is made along the same lines, with bars of heavy metal on both sides of the clamp loops.

Frequency Measurement

Under the WERS regulations provision must be made for measurement of frequency of the transmitters in the network, and for checking the carrier stability to make sure that the frequency deviation does not exceed that permitted in the section of the band in which the transmitter operates.

Probably the simplest means of measuring frequency is the Lecher wire system, which is a pair of parallel bare wires to which the transmitter or receiver can be coupled. The parallel wires form a transmission line along which standing waves appear, and the distance between consecutive current loops along the line gives the wavelength directly.

The Lecher wire line should be at least a wavelength long — that is, 9 feet or more — and should be entirely air-insulated except where it is supported at the ends. The wires can be stretched tightly between any two convenient supports. The spacing between wires should be about an inch to an inch and one-half. The positions of the current loops are found by means of a "shorting bar," which is simply a metal strip or knife edge which can be slid along the line to vary its effective length.

Building a Lecher-wire system — The wires can be used more conveniently and with greater accuracy if they are mounted up in fairly permanent fashion and provided with a shorting bar maintained at right angles to them. The construction shown in Figs. 1652 and 1653 requires a little time but the cost is negligible, and both are well repaid in operating ease. The support consists of two 12-foot pieces of "1 by 2" (actually about $\frac{3}{4} \times 1\frac{5}{8}$ inch) pine fastened together with wood screws to form a T girder, this arrangement being used to minimize bending of the wood when the wires are tightened. The anchors at the ends are also "1 by 2", cut and screwed together to make a block. The feet at each end keep the assembly from tipping over when in use. The wires terminate in airplane-type strain insulators at one end, and at the other in small turnbuckles for taking up the slack. The wire is bare solid copper antenna wire (hard-drawn) of about No. 16 gauge. The turnbuckles are held in place by a $\frac{3}{16} \times 2$-inch bolt through the anchor block. This end of the line is thus short-circuited; it does not matter whether it is open or shorted, since the other end is the one connected to the pick-up loop.

The slider, also made from pieces of "1 by 2", serves the double purpose of holding the shorting bar and acting as a guide to keep the wire spacing constant. Sheet metal pieces screwed to the sides of the sliding block are bent under the horizontal member of the T to keep the block in place. At the back is a horizontal strip of bakelite to keep the wires pressed close to but not actually touching the shorting bar. This allows the block to slide freely, the wires being pressed down on the bar only when an actual reading is to be taken. A small piece of wood held in the hand can be used; it is an easy

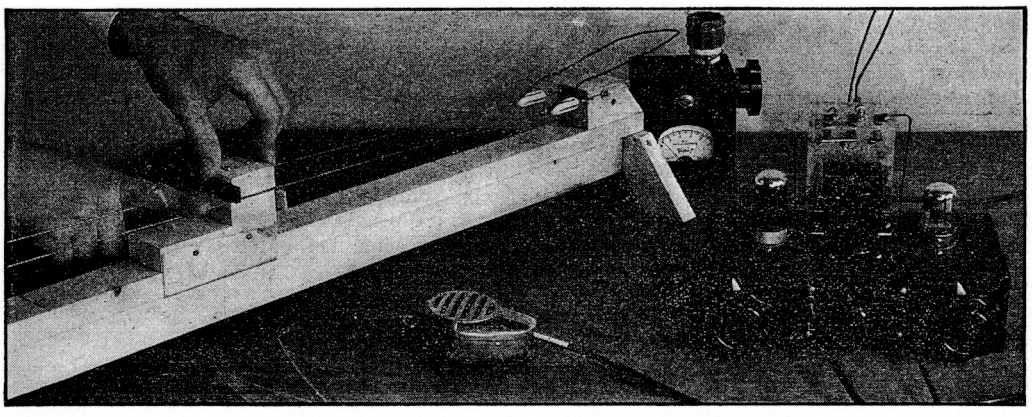

Fig. 1652 — A Lecher-wire system set up for frequency measurement, using a crystal-detector absorption frequency meter, loosely coupled to the oscillator tank, as a resonance indicator. Because only very loose coupling to the oscillator is required, this system will give more accurate results than coupling the wires directly to the transmitter tank.

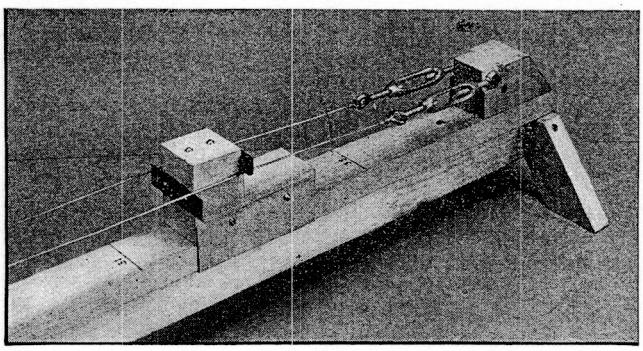

Fig. 1653 — One end of a typical Lecher-wire system. Turnbuckles are used for maintaining tension. The shorting bar is of brass with a sharp edge for better contact and more precise indication; the wooden slider keepts it at right angles to the wires. A horizontal strip of bakelite at the back of the slider keeps the wires tight against the shorting bar.

matter to regulate the pressure so that free movement is secured. A spring device could be arranged for the same purpose.

As it is convenient to measure lengths directly in the metric system used for wavelength rather than in inches, the top of the T beam is marked off in decimeter (10-centimeter) units. A 10-centimeter transparent scale (obtainable at 5 & 10 cent stores) can be cemented to the slider, extending out from the front, so that readings can be taken to the nearest millimeter. The difference between any two readings gives the half wavelength directly.

The T beam will tend to bow outward if the turnbuckles are tightened too much, which will bend the scale slightly out of parallel with the wires. It is best to use just enough tension to keep the wires fairly taut, but not enough to put an appreciable bend in the wooden member. This makes the slide move more freely and also helps avoid small errors in measuring.

Making measurements — Resonance indications can be obtained in several different ways. Let us suppose the frequency of a transmitter is to be measured. A convenient and fairly sensitive indicator can be made by soldering the ends of a one-turn loop of wire, of about the same diameter as the transmitter tank coil, to a low-current flashlight bulb, then coupling the loop to the tank coil to give a moderately-bright glow. A similar coupling loop should be connected to the ends of the Lecher wires and brought near the tank coil, as shown in Fig. 1654. Then the shorting bar should be slid along the wires outward from the transmitter until the lamp gives a sharp dip in brightness. This point should be marked (a piece of string can be tied on one of the wires) and the shorting bar moved out until a second dip is obtained. Marking the second spot, the distance between the two points can be measured and will be equal to half the wavelength. If the measurement is made in inches, the frequency will be

$$F_{Mc.} = \frac{5906}{\text{length (inches)}}$$

If the length is measured in meters,

$$F_{Mc.} = \frac{150}{\text{length (meters)}}$$

A frequency of 112 Mc. corresponds to a length of slightly less than 52¾ inches (1.34 meters) and a frequency of 116 Mc. to 50 29/32 inches (1.29 meters).

In checking a superregenerative receiver, the Lecher wires may be similarly coupled to the receiver coil. In this case the resonance indication may be obtained by setting the receiver just to the point where the hiss is obtained, then as the bar is slid along the wires a spot will be found where the receiver goes out of oscillation. The distance between two such spots is equal to a half wavelength.

In either case, the most accurate readings result only when the loosest possible coupling is used between the line and the tank coil. After taking a preliminary reading to find the regions along the line in which resonance occurs, loosen the coupling until the indications are just discernible and repeat the measurement. Unless this is done the tuning of the line will affect the frequency of the oscillator and inaccurate indications will be obtained. As the coupling is loosened the resonance points will become sharper, which is a further aid to accurate determination of the wavelength.

In using the shorting bar, make sure that it is always at right angles to the two wires. A sharp edge on the bar is desirable, since it not only helps make good contact but also definitely locates the *point* of contact.

The accuracy with which frequency can be measured by such a system depends principally upon the technique of measurement. The necessity for using very loose coupling to the transmitter or receiver has already been mentioned. In addition, careful measurement of the exact distance between two current loops also is essential. Even if all other sources of error are eliminated, measurements within 0.1 per cent require an accuracy within 1 part in 1000, or 1 millimeter in one meter, in measuring the distance along the wires. This means that an accurate standard of length is necessary — a good steel tape, for instance — and that care must be used in determining the length exactly.

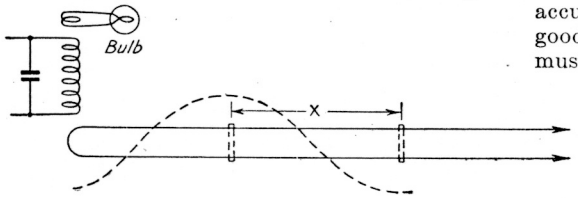

Fig. 1654 — Coupling the Lecher-wire system to a transmitter tank coil. Typical standing-wave distribution is shown by the dashed line. The position of the shorting bar at the current loops is indicated. X is equal to one-half wavelength.

When the frequency of an oscillator-type transmitter is given a final check, the antenna should be connected and the antenna coupling adjusted for normal operation. This is necessary because the frequency will be affected by the antenna coupling, so that a measurement made without an antenna (or with a dummy antenna) will not necessarily hold when the actual antenna and transmission line are coupled to the transmitter. The resonance indicator should be connected in series with the transmission line. If a flashlight bulb will not light under these conditions, a sensitive resonance indicator consisting of a 112-Mc. tuned circuit connected to a crystal detector and low-range milliammeter will give excellent results. Such a device is described in Chapter Nineteen. Its use is illustrated in Fig. 1652.

The measurement procedure involves very few additional operations. Tune the meter to resonance as indicated by maximum milliammeter reading, then move it as far as possible from the transmitter while still getting a reading of the order of 25 per cent of maximum. Couple the loop at the end of the Lecher wires to the coil and take a trial setting of the shorting bar. The resonance point will be given by a sharp dip in the meter reading. Slow variations as the bar is slid along simply mean that some detuning of the circuit is taking place. The resonance dip will be quite pronounced and the bar should not have to be moved more than a half inch or so to go completely through it. Once the resonance point is identified, loosen the coupling until the dip is just a small downward kick in the reading. From this point on, the measurement procedure is the same as before. By this method it is possible to avoid detuning of the oscillator by the Lecher wires, some amount of which usually takes place even with loose coupling when the line is coupled to the oscillator itself. This occurs because of the necessity for abstracting an appreciable amount of energy from the circuit to get a good resonance indication from a flashlight lamp or similar device. With the crystal detector, it is possible to work at least a foot or two from even a low-power oscillator.

Other methods — Even under good conditions, frequency determination by the Lecher wire method is subject to inaccuracy of the order of 0.1 per cent by the limitations of the means available for measuring length, as well as other small but avoidable errors. More accurate measurements require more elaborate equipment, although not necessarily equipment which is not already available or which cannot be constructed readily.

At lower frequencies it is customary to employ an oscillator whose fundamental frequency is such that harmonics appear at intervals of some multiple of 100 kc., the harmonics being used to provide calibration points for a receiver or heterodyne frequency meter. Methods of construction and calibration are fully described in Chapter Nineteen. If a regular communcations receiver is so calibrated it can readily be used for checking the frequency of 112-Mc. transmitters. A simple method, suggested by W1EAO, is shown in block-diagram form in Fig. 1655. An auxiliary oscillator capable of tuning over the range 14–14.5 Mc. (not necessarily band spread tuning) is required. Any simple oscillator circuit may be used, and it may be operated at any convenient plate voltage from 100 volts upward.

The method of measurement is as follows: Tune in, on the regular 112-Mc. receiver, the signal to be measured. Set the auxiliary oscillator frequency so that its 8th harmonic is heard beating with the 112 Mc. signal. Adjust to zero beat. Then tune the communications receiver to the fundamental frequency of the auxiliary oscillator. Adjust the receiver to zero beat and read the frequency as accurately as possible from the calibration curve. Multiplying this figure by 8 will give the 112-Mc. transmitter frequency.

Two initial precautions must be observed in using this method. First, it must be determined that the auxiliary oscillator is tuning over the 14–14.5 Mc. range. The chief cause of error here is the possibility of a spurious response (such as an image) in the communications receiver, which would result in a misleading frequency indication. For this reason the signal in the communications receiver must not be too strong. Only enough antenna should be used on the receiver to obtain a signal of moderate strength; in many cases no antenna will be necessary. Second, ascertain that the 8th harmonic is the one actually being used by giving the 112-Mc. receiver or transmitter an initial check with Lecher wires. The 14-Mc. frequency is used so that there will be no possibility of getting the wrong harmonic after the 112-Mc. band is known even roughly. The auxiliary oscillator dial should be marked with the 14- and 14.5-Mc. limits, so there will be no chance of tuning far off frequency and getting incorrect readings.

With this method, the accuracy of measurement depends upon the accuracy with which the auxiliary oscillator and communications receiver are set to zero beat, and on the accuracy of the receiver calibration. There should be no particular difficulty in securing an accuracy within 0.01 per cent with reasonable care. In zero-beating the oscillator harmonic to a

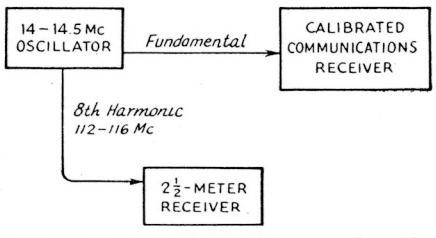

Fig. 1655 — Block diagram showing use of a calibrated communications receiver and auxiliary 14-Mc. oscillator for checking frequency of 1.12-Mc. WERS stations.

112-Mc. signal when a superregenerative receiver is used on the latter frequency, a whole series of beat notes will be heard as the auxiliary oscillator frequency is varied. However, one of these will be much stronger than the others and represents the true beat; it will not be difficult to identify the proper one.

Frequency-checking procedure — For the regular frequency-checking procedure, the best plan would seem to be to calibrate a bandspread receiver at the control station, using whatever frequency-measurement means is available, and then by means of the receiver to measure the frequency of each transmitter on the air as it checks into the network in test periods. With relatively little initial cut-and-try each station can be set on its proper frequency, after which only minor adjustments should be necessary even over quite long periods of time. Under this plan the frequency checking actually is continuous, since a frequency deviation in any of the transmitters reporting to the control station will instantly be observed because the transmitter will appear at a different setting of the receiver dial.

The receiver calibration should be checked at regular intervals — once a month, or oftener if convenient. This check should be made with the antenna connected to the receiver.

In general, it will not be possible to check the control station frequency by means of a calibrated receiver in the same station — at least not with the simple receivers likely to be used. However, in this case it is not inconvenient to measure the frequency of the transmitter directly, using the primary means of frequency determination provided for the system. This check can be made before the transmitter goes on the air at each regular test period.

¶ References

The *QST* articles listed below deal with both the technical and operating aspects of WERS, and provide information supplementary to that contained in this chapter. Those marked with an asterisk (*) describe in somewhat more detail apparatus treated in this chapter.

Technical and Constructional

*"A 112-Mc. Emergency Transmitter," Grammer, Dec., 1941.
"A Compact Receiver for 112 Mc.," Chambers, Dec., 1941.
"An Experimental 112-Mc. Receiver," Brannin, Dec., 1941,
*"Power Supply for Emergency Equipment," Grammer. Jan., 1942.
*"Receivers for 112-Mc. Emergency Work," Goodman, Jan., 1942.
*"Antennas for 112-Mc. Mobile Work," Goodman, Feb., 1942.
*"More Gear for Civilian Defense," Grammer, Feb., 1942.
"Defense Network Control Station," Stiles, Feb., 1942.
"Kinks for the DK-3 Transceiver," Hints & Kinks, Feb., 1942.
"A Pack Set for 112-Mc. Defense Work," Chambers, April, 1942.
"A Simple Transceiver for 2½," Hints & Kinks, April, 1942.
"A 112-Mc. Transmitter-Receiver Combination," Brannin, May, 1942.
"A Talkie-Walkie for Civilian Defense," Kopetzky, June, 1942.
"Reducing Radiation from the MRT-3 Transceiver," Hints & Kinks, August, 1942.
"Building WERS Gear from Salvaged B.C. Sets," Mix Sept., 1942.
"A Simple Method of Frequency Measurement for WERS," Woodward, Sept., 1942.
*"A Transceiver for WERS," Grammer, Oct., 1942.
*"A Simple Transmitter-Receiver for War Emergency Work," Rand, Nov., 1942.
"WERS Gear, 1942 Style," Hieronymus, Nov., 1942.
"A 25-Watt 2½-Meter M.O.P.A.," Bailey, Dec., 1942.
"A 112-Mc. Transmitter-Receiver," Lynch, Jan., 1943.
"Substitute for Transceiver Transformer," Hints & Kinks, March, 1943.
"A Crystal Controlled Transmitter for WERS," Brooks, April, 1943.
"Mica Trimmer Condensers in WERS Gear," Hints & Kinks, June, 1943.
"An Economical Transmitter-Receiver for WERS," Magee, June, 1943.
"Rebuilding TR4s for Non-Priority Tubes," Mix, July, 1943.
*"Constructional Aspects of WERS Mobile Installations," Forster, August, 1943.
"Notes on Commercial Gear for WERS," Hints & Kinks, August, 1943.
"Notes Covering the WERS Transmitter-Receivers for Allegany County," Hints & Kinks, August, 1943.
"Three-Element Directive Antenna for Portable 112-Mc. Work," Hints & Kinks, August, 1943.
"Folding Car-Roof V.H.F. Antenna," Hints & Kinks, August, 1943.
*"More Selectivity in WERS Reception," Grammer, Sept., 1943.
"Handy Andy," Palmer, Sept., 1943.

Organization and Regulations

"Civilian Defense" (editorial), Feb., 1942.
"Westchester County Hams Are Prepared," Taylor, Feb., 1942.
"The Green Light" (editorial), July, 1942.
"The War Emergency Radio Service," July, 1942.
"Planning WERS For Your Community," Huntoon, August, 1942.
"Technical Aspects of the WERS Regulations," Grammer, August, 1942.
"Operating Procedure in WERS" (Operating News), August, 1942.
"We Must Not Fail" (editorial), Sept., 1942.
"Massachusetts Civilian Defense Radio," Doremus, Sept., 1942.
"Training Civilians for Wartime Operating," Huntoon, Sept., 1942.
"Frequency Allocations in the WERS," Ling, Oct., 1942.
"Training Auxiliary Operators for WERS," Huntoon, Oct., 1942.
"WERS Licensing"; "WERS Agreements" (Operating News), Oct., 1942.
"WERS License Applications" (Operating News), Nov., 1942.
"WERS Needs You Too" (editorial), Dec., 1942.
"Akron and the WERS," Brown and Moody, Dec., 1942.
"OCD Announcement" (Operating News), Dec., 1942.
"Amateur Radio and the Civil Air Patrol," Fraim, Jan., 1943.
"WERS Application Discrepancies" (Operating News), Jan., 1943.
"The Tri-Part Plan," Hart, Feb., 1943.
"The Fifth Regional WERS," Gibbs, Feb., 1943.
"When Disaster Strikes" (editorial), April, 1943.
"Some New Thoughts on WERS," Hart, April, 1943.
"WERS in the New Haven Warning District," Fraser and Keating, May, 1943.
"CD-WERS in the State of Maryland," McNulty, June, 1943.
"Operating Procedure" (Operating News), July, 1943.
"WERS Is Making Progress" (editorial), August, 1943.
"Message Handling in WERS," Russell and King, August, 1943.
"More Rule Changes" (Operating News), August, 1943.
"More on the New Rules"; "Transfer of Equipment"; "Operator Permits"; "Experimental Data"; "Identification"; "Operating Discrepancies" (Operating News), Sept., 1943.
"WERS for Seven Million People," Long and Kenney, Oct., 1943.
"Visiting Mobiles"; "Keeping Up Interest"; "What Constitutes Rag-Chewing?" (Operating News), Oct., 1943.

General Rules and Regulations Governing All Radio Stations in the War Emergency Radio Service

(FEDERAL COMMUNICATIONS COMMISSION, WASHINGTON)

Part 15.—Rules Governing War Emergency Radio Service

DEFINITIONS

15.1. *War Emergency Radio Service.* The term "War Emergency Radio Service" means a temporary radio communication service intended solely for emergency communication in connection with the national defense and security.

15.2. *Civilian Defense Stations.* The term "Civilian Defense Station" means a station operated by a municipal government for emergency communication relating directly to the activities of the United States Citizens' Defense Corps [1] or other equivalent officially recognized organization.

15.3. *State Guard Stations.* The term "State Guard Station" means a station operated by a State for communication in connection with the activities of the State Guard or equivalent officially recognized organization.

15.4. *Civil Air Patrol Stations.* The term "Civil Air Patrol Station" means a station used exclusively for essential communications relating directly to the activities of the Civil Air Patrol.[7] A civil air patrol station used on a mission for and under the direction and control of the military shall not be deemed subject to these rules.

15.5. *Control Unit.* The term "control unit" means any station unit licensed in the War Emergency Radio Service and designated by the licensee, with the approval of the radio aide or communications officer, to direct the use and operation of other station units of the same licensee which, together with the control unit so designated, constitute a coördinated communication system.

APPLICATIONS

15.11 *Applications for Station License.* Applications for authorizations in the war emergency radio service shall be submitted on the prescribed form.[2] A blanket application may be submitted for an authorization to cover the operation of all fixed, portable, mobile, and portable-mobile transmitters proposed to be used in a single coördinated communication system.

OPERATING SPECIFICATIONS

15.21. *Frequencies.* The following frequency bands are available for assignments to stations operating in the war emergency radio services:

112,000–116,000 kc.
224,000–230,000 kc.
400,000–401,000 kc.

15.22. *Types of Emission.* All stations in the war emergency radio service are authorized to use the following types of emissions: A-0, A-1, A-2, A-3, or special for frequency modulation.

15.23. *Selection of Frequency.* Licensees may select operating frequencies within the available bands provided the equipment is capable of meeting the frequency stability requirements specified in Section 15.25.

15.24. *Non-exclusive Use of Frequencies.* No licensee of any station in the war emergency radio service shall have the exclusive use of any frequency. In the event mutual interference occurs between stations operating simultaneously, the licensee shall coördinate the operation of the stations so as to minimize interference, and make the most effective use of the frequencies available.

15.25. *Frequency Stability.* (a) Transmitting equipment used in the war emergency radio service must be capable of maintaining the operating carrier frequency (without readjustments during operation) within the limits set forth in the table:

Operating frequencies within the bands (Kilocycles)	*Maximum deviation*
112,000–114,000	0.1 of one per cent
114,000–116,000	0.3 of one per cent
224,000–227,000	0.1 of one per cent
227,000–230,000	0.3 of one per cent
400,000–401,000	0.2 of one per cent

(b) Notwithstanding the maximum frequency deviation permitted, all emissions, including those resulting from keying or modulating a transmitter, shall be confined within the frequency band in which the transmitter is authorized to be operated in accordance with the provisions of Sec. 15.25 (a).

(c) Spurious radiations shall be reduced or eliminated in accordance with good engineering practice.

15.26. *Frequency Measurement Procedure.* The licensees of stations in the war emergency radio service shall provide for measurement of the transmitter frequencies, shall establish a procedure for checking them regularly and shall maintain adequate records of such measurements. The measurement of the transmitter frequencies shall be made by means independent of the frequency control of the transmitter, and shall be of sufficient accuracy to assure operation within the maximum deviation permitted under Sec. 15.25.

15.27. *Changes in Equipment.* The licensee of a station in the war emergency radio service may make any alterations in components of the licensed equipment that are deemed necessary or desirable unless specifically prohibited from doing so by the terms of the license, provided that:

(a) All changes be made with the full knowledge and consent of the radio aide or the communications officer.

(b) Emissions are not radiated outside the authorized frequency band.

(c) The operating frequency does not deviate more than that specified in Sec. 15.25.

(d) Plate power input does not exceed that authorized in Sec. 15.28.

15.28. *Power.* (a) All stations in the war emergency radio service are authorized to use a maximum unmodulated power input of 25 watts to the plate circuit of the final amplifier stage of an oscillator-amplifier transmitter or to the plate circuit of an oscillator transmitter.

(b) No station shall be operated at any time with a power in excess of that necessary to render satisfactory communication service. In no event shall operations be conducted with power in excess of the authorized power or in excess of the maximum obtainable carrier power output of the transmitter consistent with satisfactory technical operation.

15.29. *Modulation Limits.* (a) The transmitted carrier of stations in the war emergency radio service using amplitude modulation shall be modulated not more than 100%.

(b) The transmitted carrier of stations in the war emergency radio service using frequency modulation shall be modulated so that the total frequency swing arising from modulation shall not exceed 100 kilocycles.

15.30. *Who May Operate Stations.* All stations in the war emergency radio service shall be operated only by a radio operator holding a valid war emergency radio service operator permit, provided, however, that when such stations use radiotelephony, the licensee may permit such persons as the radio operator deems essential to the emergency, to transmit by voice, on condition that the duly licensed operator maintains control over the transmission by listening and turning the carrier on and off when required, and signs the station off after the transmission has been completed,

[1] The United States Citizens' Defense Corps is an organization of enrolled civilian volunteers established within the Office of Civilian Defense to implement the passive defense.

[2] FCC Form No. 455.

[7] The Civil Air Patrol is an organization established by the Director of the U. S. Office of Civilian Defense pursuant to Executive Order No. 8757, as amended. Further information pertaining to the organization of the Civil Air Patrol can be obtained from the National Commander, Civil Air Patrol, Washington, D. C. To facilitate consideration of applications for such authorizations, they should be forwarded first to the National Commander who in turn will submit them to the Commission.

15.31. *Logs.* The station licensee shall maintain written records concurrently with the operation of each station with respect to the following:

(a) Location of station during operation.

(b) Date and time of operation in local standard (war) time.

(c) Identity of station worked and type of communications handled.

(d) Operating frequencies employed.

(e) Names and official titles of persons transmitting by voice over the station whenever such voice transmission is actually carried on by other than a duly licensed operator.[3]

(f) Name of operator on duty.

(g) Signature and title of person maintaining log record.

Provided, however, that operation in a blackout or during an emergency endangering safety of life or important property, such record of operation shall be reduced to writing at the earliest opportunity and in such detail as may be practicable.

IDENTIFICATION OF STATIONS

15.41. *Identification of Transmitters.* The call letters and unit number assigned in the license shall be permanently affixed to the transmitter by the licensee.

15.42. *Transmission of Call Letters.* Stations in the war emergency radio service shall identify themselves by the call letters and unit number assigned to the transmitter at the beginning and end of each complete exchange of communications. When communications are carried on with any other station licensee, stations in the war emergency radio service shall identify themselves as herein required, and in addition, shall announce the call letters, unit numbers, and the class of the station with which they are communicating.

LICENSES

15.51. *Control of Equipment.* All equipment for which a license is granted must be owned by or in the possession of the station licensee at all times. No license will be granted permitting the operation of a specific transmitter by more than one station licensee in the war emergency radio service.

15.52. *Cancellation Without Notice or Hearing.* A license authorizing the operation of a station in the war emergency radio service is granted upon the express condition that said grant is subject to change or cancellation by the Commission at any time without advance notice or hearing, if in its discretion such action is deemed necessary for the national security and defense and successful conduct of the war.

15.53. *License Period.* (a) Station licenses normally will be issued for a period of one year unless otherwise stated therein.

(b) Dates of expiration of licenses shall be in accordance with the following:

(1) For stations in the states of Alabama, Arizona, Arkansas, California, Colorado, Connecticut, District of Columbia, Delaware and Florida the first day of February of each year.

(2) For stations in the states of Georgia, Idaho, Illinois, Indiana, Iowa, Kansas and Kentucky the first day of March.

(3) For stations in the states of Louisiana, Maine, Maryland, Massachusetts, Michigan, Minnesota, Mississippi, Missouri and Montana the first day of April.

(4) For stations in the states of Nebraska, Nevada, New Hampshire, New Jersey, New Mexico, New York, North Carolina and North Dakota the first day of May.

(5) For stations in the states of Ohio, Oklahoma, Oregon, Pennsylvania, Rhode Island, South Carolina and South Dakota the first day of June.

(6) For stations in the states of Tennessee, Texas, Utah, Vermont, Virginia, Washington, West Virginia, Wisconsin and Wyoming, and for stations in the territories and possessions, the first day of July.

(c) Unless otherwise directed by the Commission, each application for renewal of station license shall be filed on the proper form[4] at least sixty (60) days prior to the expiration date of the license sought to be renewed.

15.54. *Availability of Station License.* The original license shall be associated with the station unit normally in control of all station units covered by the license, and photocopies of the original license provided by the licensee shall be associated with each of the other station units covered by the license. The original and all photocopies shall be readily available for inspection at any time by an authorized government representative.

15.55. *General Limitations.* Stations in the war emergency radio service shall not be operated on board any vessel unless such operation has been approved by appropriate naval authority.

15.56. *Service for U. S. Government.* During emergencies endangering the safety of life or property, the licensee of any station in the War Emergency Radio Service may use any licensed unit of such station to provide essential communication for the United States Government, when requested to do so by the government department or agency concerned, *Provided,* That a written notice of such operation, including designation of the source of the request, is sent within twenty-four hours after the commencement of such operation to the inspector in charge of the radio district in which the station is located, and a copy of such notice is sent to the Federal Communications Commission in Washington, D. C.

CIVILIAN DEFENSE STATIONS

Station Licensees

15.61. *Eligibility for Station License.* Authorizations for civilian defense stations will be issued only to municipal governments, such as cities, towns, counties, etc.

15.62. *Supplementary Statements.* The applicant shall submit with the application complete and detailed information on the following:

(a) The proposed plan of operation including:

1. General operating procedure.
2. The scope of service to be rendered.
3. Type of messages to be transmitted.
4. Methods to be used in monitoring, supervising, and controlling the operation of all stations for which license is requested, including method of compliance with Restricted Order No. 2.
5. Methods used to measure the operating frequencies of the transmitters.
6. Provisions for frequent inspection of the equipment.
7. Source and distribution of the equipment.

(b) The area in which the stations are to be operated:

1. If service is to be rendered to adjacent municipalities, the applicant must submit sworn copies of agreements made between the applicant and the adjacent municipalities. Such agreements shall show that the applicant is required to furnish service and the adjacent municipalities agree to accept such service and not to request individual authority, and that such agreements shall provide notification to the Commission sixty (60) days prior to termination thereof.

(c) Methods used to ascertain the loyalty and integrity of radio station operating personnel.

(d) Plans for enlisting radio operating personnel, and whether they will serve on a paid or voluntary basis.

Scope of Service

15.63. *Service Which May Be Rendered.* (a) Civilian defense stations may be used during emergencies endangering life, public safety, or important property, for essential communication relating to civilian defense or national security. Civilian defense station licensees, when requested in specific instances by the licensee of any State Guard station or the licensee of any Civil Air Patrol station, may use their licensed civilian defense stations for essential communication with such State Guard or Civil Air Patrol station(s), during emergencies endangering life, public safety, or important property. Civilian defense stations shall not be operated on board any aircraft unless specific authority for such operation has been granted by the Commission upon showing of need therefor.

(b) Upon application and showing of need therefor, individual control units may be authorized to communicate during the first 15 minutes of each hour with control units of the same licensee or other licensees, and with other units of the same licensee, for the exclusive purpose of handling essential communications preparatory to any anticipated emergency involving the safety of life or important property in connection with civilian defense or national security. Units other than control units may transmit, for this purpose, only when directed to do so by an authorized control unit of the same licensee. When operating under this pro-

[3] This provision does not eliminate the requirement of a licensed operator on duty at the transmitter location who is responsible for the operation thereof.

[4] FCC Form No. 405.

vision, each unit shall comply with operating instructions given by the authorized control unit. The use and operation of control units as provided in this subsection shall be discontinued during such periods as may be deemed necessary by the licensee in order to avoid interference to any tests or drills being conducted in accordance with Sections 15.75 and 15.76 of these rules.

15.64. *Communication with Other Stations.* Within the scope of service permitted under Sec. 15.63 and during tests and drills, civilian defense stations may be used to communicate with stations in the war emergency radio service, with stations in the emergency radio service (police, forestry, special emergency, and marine fire stations), and with United States Government stations, in those cases which require coöperation or coördination of activities. Transmissions not directed to authorized stations are prohibited.

Supervision and Control

15.66. *Operational Supervision.* The operation of civilian defense stations shall be directed at all times by a duly qualified "radio aide," provided, however, that the delegation of such supervision shall in no way relieve the licensee of the ultimate responsibility for the proper operation of the stations in accordance with the terms of the station license.

Radio Aide

15.71. *Definition.* The term "radio aide" means the official designated by the station licensee to direct and supervise the operation of all of the radio stations to be covered in the license for which application is made.

15.72. *Qualifications.* The radio aide shall

(a) Hold a valid operator's license of any class granted by the Commission except a restricted radiotelephone operator's permit; and shall

(b) Have been investigated and certified by the station licensee as to his loyalty to the United States and recognized integrity.

15.73. *Certification.* The station licensee shall submit to the Commission, on a prescribed form,[5] the name and address of the initial radio aide and his successor(s), together with a statement from the radio aide that he has accepted such appointment, and the station licensee shall certify:

(a) That the radio aide has been duly investigated by the licensee and is believed to be loyal to the United States and is of recognized integrity; and

(b) That his technical and administrative qualifications are adequate for the proper performance of his duties.

15.74. *Duties.* The duties of the radio aide shall include among others:

(a) The direction and supervision of all radio stations to be covered in the license to assure strict compliance with the terms of the station license.

(b) The provision for the adequate monitoring of all transmissions of the stations under his supervision to assure compliance with the rules and regulations of the Commission, and to guard against the improper use of the radio stations and intentional or inadvertent transmission which might be of value to the enemy.

(c) Inspection of the equipment periodically to insure satisfactory technical operation.

(d) Certification of the names of proposed radio operators after a thorough investigation has been made relative to their loyalty to the United States and their known integrity.

Tests and Drills

15.75. *Tests.* The licensees of civilian defense stations are permitted to make such tests as are necessary for the purpose of maintaining equipment, making adjustments to insure that the apparatus is in operating condition, training personnel, and perfecting methods of operating procedure, *Provided,* That such tests shall be conducted only during the following periods:

Time Zone	*Eastern*	*Central*	*Mountain*	*Pacific*
Mondays...	9 PM–11 PM	8 PM–10 PM	8 PM–10 PM	7 PM–9 PM
Wednesdays.	9 PM–11 PM	8 PM–10 PM	8 PM–10 PM	7 PM–9 PM
Sundays....	5 PM– 7 PM	4 PM– 6 PM	3 PM– 5 PM	2 PM–4 PM

All times given are local standard (war) time.

15.76. *Drills.* Licensees of civilian defense stations may conduct drills during practice alerts, practice blackouts, practice mobilizations or other comparable situations as may be initiated and ordered by the proper military authority or local civil defense authority, provided that a notice, by mail, of such operations is sent within twenty-four hours after the drill to the Inspector in Charge of the radio district in which the stations are located, and a copy to the Federal Communications Commission in Washington, D. C.

[5] FCC Form No. 455 (a).

STATE GUARD STATIONS

Licensees

15.81. *Eligibility for License.* Authorizations for state guard stations will be issued only to the official state guard or comparable organizations of a state, territory, possession, or the District of Columbia.

15.82. *Supplementary Statements.* The applicant shall submit with the application complete and detailed information on the proposed plan of operation including:

(a) General operating procedure.

(b) Scope of service to be rendered.

(c) Type of messages to be transmitted.

(d) Methods to be used in monitoring, supervising, and controlling the operation of all stations for which the license is requested.

(e) Method used to measure the operating frequencies of the transmitters.

(f) Provisions for frequent inspection of the equipment.

(g) Source and distribution of the equipment.

Service

15.83. *Scope of Service.* (a) State guard stations may be used only (1) during emergencies endangering life, public safety, or important property, or (2) for essential communications directly relating to state guard activities in instances in which other communication facilities do not exist or are inadequate.

(b) State guard stations may be used to communicate with stations in the war emergency radio service or in the emergency radio services (police, forestry, special emergency, and marine fire stations) in those cases which require coöperation or coördination of activities. Transmissions not directed to a specific authorized station are prohibited.

Supervision and Control

15.84. *Operational Supervision.* The operation of state guard stations shall be directed at all times by an officer in charge of communications or communications officer provided, however, that the delegation of such supervision shall in no way relieve the licensee of the ultimate responsibility for the proper operation of the stations in accordance with the terms of the station license.

Communications Officer

15.85. *Definition.* The term "communications officer" means the official designated by the station licensee to direct and supervise the operation of all radio stations to be covered in the license for which application is made.

15.86. *Duties.* The duties of the communications officer shall include, among others:

(a) The direction and supervision of all radio stations to be covered in the license to assure strict compliance with the terms of the station license.

(b) The provision of the adequate monitoring of all transmissions of the stations under his supervision to assure compliance with the rules and regulations of the Commission, and to guard against the improper use of the radio stations and intentional or inadvertent transmissions which might be of value to the enemy.

(c) Inspection of the equipment periodically to insure satisfactory technical operation.

(d) Certification of the names of proposed radio operators after a thorough investigation has been made relative to their competence.

Tests

15.87. *Tests.* The licensees of state guard stations are permitted to make such routine tests as are required for the proper maintenance of the stations and the communication system, provided that steps are taken to avoid interference with other stations, and provided further that such testing shall not exceed a total of four (4) hours per week.

CIVIL AIR PATROL STATIONS

Licensees

15.91. *Eligibility for Station License.* Authorizations for

civil air patrol stations will be issued only to the duly appointed Wing Commanders of the Civil Air Patrol.[7]

15.92. *Supplementary Statements.* The applicant shall submit with the application for station license complete and detailed information on the proposed plan of operation, including:

(a) General operating procedure.
(b) Scope of service to be rendered.
(c) Type of messages to be transmitted.
(d) Methods to be used in monitoring, supervising and controlling the operation of all stations for which the license is requested, including method of compliance with Restricted Order No. 2.
(e) Method used to measure the operating frequencies of the transmitters.
(f) Provisions for frequent inspection of the equipment.
(g) Source and distribution of the equipment.

Service

15.93. *Scope of Service.* (a) Civil air patrol stations may be used only during emergencies endangering life, public safety, or important property, or for essential communication directly relating to civil air patrol activities, when other communication facilities do not exist or are inadequate.

(b) Civil air patrol stations may be used to communicate with stations in the war emergency radio service; and with stations in the emergency radio service (police, forestry, special emergency, and marine fire stations), or with United States Government stations, in those cases which require coöperation or coördination of activities. Transmissions not directed to authorized stations are prohibited.

Supervision and Control

15.94. *Operational Supervision.* The operation of civil air patrol stations shall be directed at all times by an officer in charge of communications, formally designated as "Communications Officer," *Provided, however,* That the delegation of such supervision shall in no way relieve the station licensee of the responsibility for the proper operation of the stations in accordance with the terms of the station license, and all pertinent rules and regulations.

Communications Officer

15.95. *Definition.* The term "Communications Officer" means the official formally designated by the station licensee to direct and supervise the operation of all radio stations authorized by the related station license.

15.96. *Duties.* The duties of the communications officer shall include, among others:

(a) Direction and supervision of all radio stations authorized by the station license, to assure strict compliance with the terms of such license.

(b) Provision for adequate monitoring of all transmissions of the stations under his supervision to assure compliance with the rules and regulations of the Commission, and to guard against the improper use of the radio stations and intentional or inadvertent transmissions which might be detrimental to the national defense and security.

(c) Inspection of the equipment at frequent intervals to insure satisfactory technical operation.

(d) Certification of the names of proposed radio operators after a thorough investigation has been made relative to their competence.

(e) Whenever civilian defense stations are requested to communicate with civil air patrol stations in accordance with the provisions of Section 15.63, the communications officer, on behalf of the Wing Commander, shall promptly notify in writing the Commission in Washington, D. C., and the Inspector-in-Charge of the district in which the involved civilian defense stations are located. Such written notice shall include the following information:

1. Name of civilian defense station licensee(s).
2. Date(s) of such communication.
3. Location(s) of involved civilian defense and civil air patrol stations.
4. Brief description of the situation necessitating such intercommunication.

Tests

15.97. *Tests.* The licensees of civil air patrol stations are permitted to make such routine tests as are required for proper maintenance of the stations and the communication system, *Provided,* That adequate precautions are taken to avoid interference with other stations, *And provided further,* That such testing shall not exceed the minimum transmission necessary to insure the availability of reliable communication.

RULES AND REGULATIONS GOVERNING OPERATORS OF STATIONS IN WAR EMERGENCY RADIO SERVICE

15.101. *Licensed Operators Required.* The actual operation of any station in the War Emergency Radio Service shall be carried on only by a duly qualified radio operator holding a War Emergency Radio Service Operator Permit (See Sec. 15.30). The permit shall be in the possession of the operator at all times while on duty, and shall be produced for inspection when requested by an authorized representative of the government or the station licensee.

15.102. *Eligibility.* To be eligible for a war emergency radio service operator permit an applicant shall:

(a) Hold a radio operator license or permit of any class issued by the Commission.

(b) Have complied with the provisions of Commission Order 75 (fingerprints, proof of citizenship, etc.).

(c) Be approved by the station licensee and be properly certified for participation in the activities of the organization.

15.103. *Application Requirements.* An application for each War Emergency Radio Service Operator permit shall be submitted on the prescribed form[6] through the station licensee. This application shall include the name and address of the station licensee together with the name and address of the proposed radio operator, and the class of operator license held by the applicant, and shall be certified to by the radio aide or communications officer that:

(a) The proposed operator has been duly investigated and is believed to be loyal to the United States, and is of recognized integrity.

(b) His technical qualifications are adequate for the proper performance of his duties.

15.104. *Validity of Permit.* (a) The war emergency radio service operator permit authorizes only the operation of the stations licensed to a particular licensee, and is valid for the duration of the war and six months thereafter, but in no event to exceed a period of five years from date of issuance.

(b) The war emergency radio service operator permit is valid only when the photograph and signature of the holder have been affixed thereto.

(c) A photocopy of such permit will not be recognized for the operation of any station in the war emergency radio services.

15.105. *Cancellation of Permit.* (a) A war emergency radio service operator permit is granted upon the express condition that said permit is subject to change or cancellation by the Commission at any time without advanced notice or hearing, if in its discretion such action is deemed necessary for the national security and defense and the successful conduct of the war.

(b) The holder of a war emergency radio service operator permit shall surrender such permit to the Commission for cancellation at the request of a station licensee or upon termination of the operator's connection with the station licensee with whom he was previously affiliated.

15.106. *Duplicate Permit.* An operator whose permit has been lost, mutilated or destroyed shall immediately notify the Commission. Any operator permittee applying for a duplicate permit to replace an original which has been lost, mutilated or destroyed shall submit to the station licensee for transmittal to the Commission such mutilated license or affidavit attesting to the facts regarding the manner in which the original was lost or destroyed. If the original is later found, it or the duplicate permit shall be returned to the Commission for cancellation.

15.107. *Renewal of War Emergency Radio Service Operator Permit.* A war emergency radio service operator permit may be renewed upon proper application which should be submitted to the Commission through the station licensee as in the case for an original permit.

15.108. *Suspension of Operator License.* The war emergency radio operator permit may be cancelled and any other class of license held by the operator may be suspended for the violation by the operator of any provisions of law, treaty, rules or regulations of the Commission.

---

[6] F.C.C. Form No. 457.

CHAPTER SEVENTEEN

Antenna Construction

THE USE of good materials in the antenna system is important since the antenna is exposed to wind and weather. To keep electrical losses low, the wires in the antenna and feeder system must have good conductivity and the insulators must have low dielectric loss and surface leakage, particularly when wet.

For short antennas, No. 14 gauge hard-drawn enameled copper wire is a satisfactory conductor. For long antennas and directive arrays, No. 14 or No. 12 enameled copper-clad steel wire should be used. It is best to make feeders of ordinary soft-drawn No. 14 or No. 12 enameled copper wire, since hard-drawn or copper-clad steel wire is difficult to handle unless it is under considerable tension at all times. The wires should be all in one piece; where a joint cannot be avoided, it should be carefully soldered.

In building a resonant two-wire feeder, the spacer insulation should be of as good quality as in the antenna insulators proper. For this reason, good ceramic spacers are advisable. Wooden dowels boiled in paraffin may be used with untuned lines, but their use is not recommended for tuned lines. The wooden dowels can be attached to the feeder wires by drilling small holes and binding them to the feeders with wire.

The ends of tuned feeders or the ends of the antenna are points of maximum voltage. It is at these points that the insulation is most important, and Pyrex glass, Isolantite or steatite insulators with long leakage paths are recommended. Glazed porcelain also is satisfactory. Insulators should be cleaned once or twice a year, especially if they are subjected to much smoke and soot.

In most cases poles or masts are desirable to lift the antenna clear of surrounding buildings, although in some locations the antenna will be sufficiently in the clear when strung from one chimney to another or from a chimney to a tree. Small trees usually are not satisfactory as points of suspension for the antenna because of their movement in windy weather. If the antenna is strung from a point near the center of the trunk of a large tree, this difficulty is not so serious. Where the antenna wire must be strung from one of the smaller branches, it is best to tie a pulley firmly to the branch and run a rope through the pulley to the antenna, with the other end of the rope attached to a counterweight near the ground. The counterweight will keep the tension on the antenna wire reasonably constant even when the branches sway or the rope tightens and stretches with varying climatic conditions.

"A"-Frame Mast

The simple and inexpensive mast shown in Fig. 1701 is satisfactory for heights up to 35 or 40 feet. The materials required are the 2 × 2-inch lumber, five ¼-inch carriage bolts 5½ inches long (with washers), a few spikes, about 300 feet of No. 12 galvanized iron wire, and several small strain insulators. The latter are used every 10 to 12 feet to break the guy wires into sections. Clear, sound lumber should be selected. The completed mast may be protected by two or three coats of house paint.

If the mast is to be erected on the ground, a couple of stakes should be driven to keep the bottom from slipping and it may then be "walked up" by a pair of helpers. If it is to go on a roof, first stand it up against the side of the building and then hoist it from the roof, keeping it vertical. The whole assembly is light enough for two men to perform the complete operation — lifting the mast, carrying it to its permanent berth and fastening the guys — with the mast vertical all the while. It is entirely practicable, therefore, to erect this type of mast on any small, flat area of roof.

By using 2 × 3s or 2 × 4s, the height may be extended up to about 50 feet. The 2 × 2 is too flexible to be satisfactory at such heights.

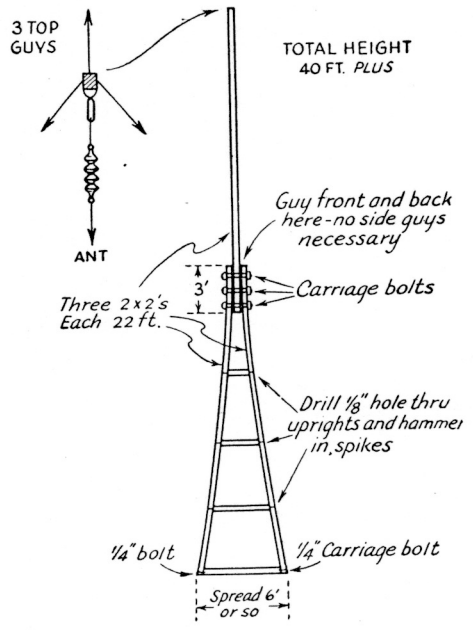

Fig. 1701 — Details of a simple 40-foot "A"-frame mast suitable for erection in locations where space is limited.

Simple Mast

The mast shown in Fig. 1702 is relatively strong, easy to construct, readily dismantled, and costs very little. Like the "A" frame, it is suitable for heights of the order of 40 feet.

The top section is a single 2 × 3, bolted at the bottom between a pair of 2 × 3s with an overlap of about two feet. The lower section thus has two legs spaced the width of the narrow side of a 2 × 3. At the bottom the two legs are bolted to a length of 2 × 4 which is set in the ground. A short length of 2 × 3 is placed between the two legs about half way up the bottom section, to maintain the spacing. All pieces are set so the long axis faces the antenna direction.

The two back guys at the top pull against the antenna, while the three lower guys prevent buckling at the center of the pole. The two sets of back guys may be anchored at the same point. The guy anchors should be 15 feet or more from the bottom of the pole.

The 2 × 4 section should be set in the ground so that it faces the proper direction, and then made vertical by lining it up with a plumb bob. The holes for the bolts should be drilled beforehand. With the lower section laid on the ground, bolt *A* should be slipped in place through the three pieces of wood and tightened just enough so that the section can turn freely on the bolt. Then the top section may be bolted in place and the mast pushed up, using a ladder or another 20-foot 2 × 3 for the job. As the mast goes up, the slack in the guys can be taken up so that the whole structure is in some measure continually supported. When the mast is vertical, bolt *B* should be slipped in place and both *A* and *B* tightened. The lower guys can then be given a final tightening, leaving those at the top a little slack until the antenna is pulled up, when they should be adjusted to pull the top section into line.

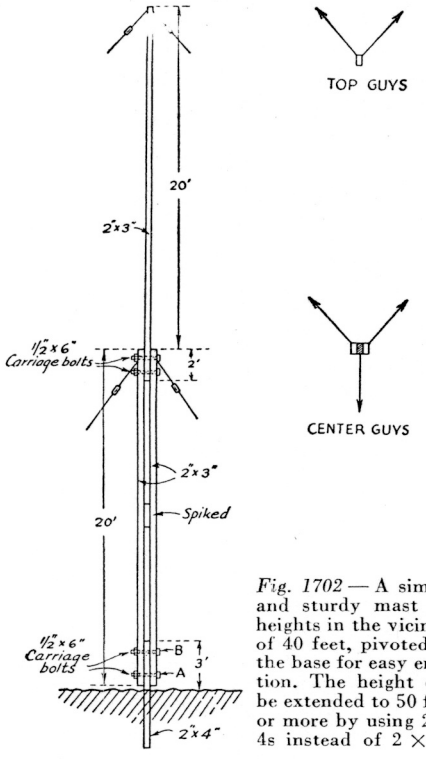

Fig. 1702 — A simple and sturdy mast for heights in the vicinity of 40 feet, pivoted at the base for easy erection. The height can be extended to 50 feet or more by using 2 × 4s instead of 2 × 3s.

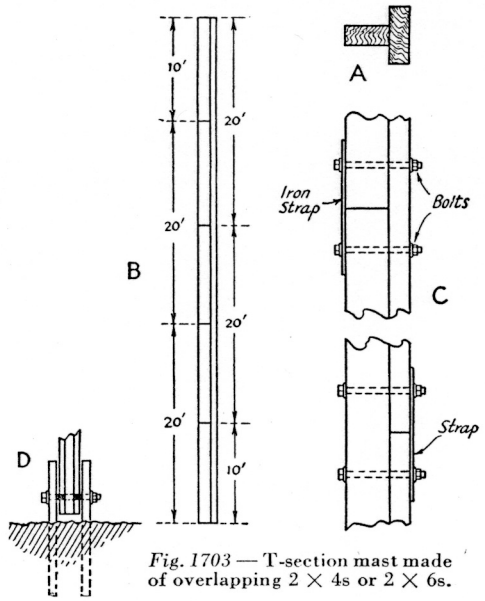

Fig. 1703 — T-section mast made of overlapping 2 × 4s or 2 × 6s.

The 2 × 4 should extend at least 3 feet into the ground. It will help to pack rocks in the hole to provide bracing. The mast will stand alone without guying when the two bottom bolts are in place, avoiding the necessity for having a helper on each guy while the mast is being raised.

T-Section Mast

A type of mast suitable for heights up to about 80 feet is shown in Fig. 1703. The mast is built up by butting 2 × 4 or 2 × 6 timbers edgewise against a second 2 × 4, as shown at A, with alternating joints in the edgewise and flatwise sections. The construction can be carried out to greater lengths simply by continuing the 20-foot sections. Longer or shorter sections may be used, if more convenient.

The method of making the joints is shown at C. Quarter-inch or 3/16-inch iron, 1½ to 2 inches wide, is recommended for the straps, with ½-inch bolts to hold the pieces together. One bolt should be run through the pieces midway between joints, to provide additional rigidity.

Although there are many ways in which such a mast can be secured at the base, the "cradle" illustrated at D has many advantages. Heavy timbers set firmly in the ground, spaced far enough apart so the base of the mast will pass between them, hold a large carriage bolt or steel bar which serves as a bearing. This bolt goes through a hole in the mast so that it is pivoted at the bottom. As the mast is swung upward

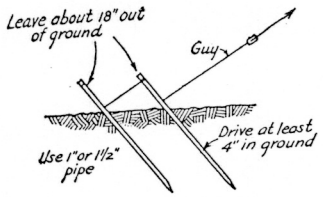

Fig. 1704 — Pipe-guy anchors. One pipe is sufficient for small masts, but two installed as shown will provide the additional strength required for larger poles.

in an arc while being raised, the bottom will be free to pivot on the bearing.

The job of raising the mast can be simplified, when a bottom bearing of this nature is used, because half of the guys can be put in place and tightened up before the mast leaves the ground. Four sets of guys should be used, one in front, one directly in the rear, and two on each side at right angles to the direction in which the mast will face. Since the base position is fixed by the bearing, all the side guys can be put in place, anchored and tightened while the mast is lying on the ground. A set of guys should be used at each of the joints in the edgewise sections, the guy wires being wrapped around the pole rather than fastened to bolts or passed through holes in the pole; either of the latter methods tends to weaken the joints.

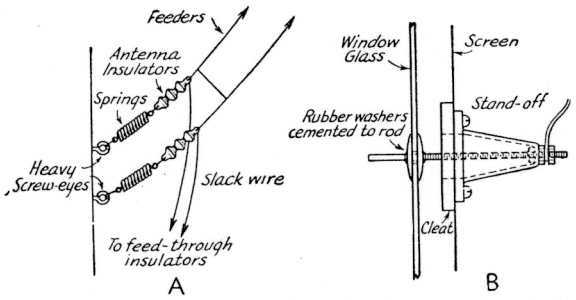

Fig. 1705 — (A) Anchoring feeders takes the strain from feed-through insulators or window glass. (B) Going through a full-length screen, a cleat is fastened to frame of the screen on the inside. Clearance holes are cut in the cleat and also in the screen.

For heights up to 50 feet, 2 × 4-inch members may be used throughout. For greater heights, it is advisable to use 2 × 6s for the edgewise sections, although 2 × 4-inch pieces will do for the flat sections.

Guys and Guy Anchors

For masts or poles up to about 50 feet, No. 12 iron wire is a satisfactory guy-wire material (No. 12 iron wire is considerably heavier than copper). Heavier wire or stranded cable may be used for taller poles or poles installed in locations where the wind velocity is high.

Guy wires should be broken up by strain insulators, to avoid the possibility of resonance at the transmitting frequency. Common practice is to insert an insulator near the top of each guy, within a few feet of the pole, and then cut each section of wire between the insulators to a length which will not be resonant either on the fundamental or harmonics. An insulator every 25 feet will be satisfactory for frequencies up to 30 Mc. The insulators should be of the "egg" type with the insulating material under compression, so that the guy will not come down if the insulator breaks.

Guy wires may be anchored to a tree or building when they happen to be in convenient spots. For small poles, a 6-foot length of 1-inch pipe driven into the ground at an angle will suffice. Additional bracing will be provided by using two pipes, as shown in Fig. 1704.

Halyards and Pulleys

A free-running pulley and a long-lived halyard are definite assets to an antenna system. Common clothesline is strong enough for small antennas, but does not stand the weather well and should be renewed frequently. Sash cord is better, but still not weather resistant. A satisfactory halyard is ⅜- or ½-inch waterproofed manila rope, the larger size being needed only to hold long stretches of wire. Ordinary rope or cord can be waterproofed by soaking it a day or two in automobile top dressing.

A good grade of galvanized iron pulley will be satisfactory in locations where the atmosphere is free from salt, but at seashore locations a pulley intended for marine use should be used. One of the best types is a hardwood block with a bronze roller-bearing shaft, which will resist corrosion even under adverse conditions.

Bringing the Antenna or Transmission Line into the Station

The antenna or transmission line should be anchored to the outside wall of the building, as shown in Fig. 1705, to remove strain from the lead-in insulators. Holes cut through the walls of the building and fitted with feed-through insulators are undoubtedly the best means of bringing the line into the station. The holes should have plenty of air clearance about the conducting rod, especially when using tuned lines which develop high voltages. Probably the best place to go through the walls is the trimming board at the top or bottom of a window frame which provides flat surfaces for lead-in insulators. Cement or rubber gaskets may be used to waterproof the exposed joints.

Where such a procedure is not permissible, the window itself usually offers the best opportunity. One satisfactory method is to drill holes in the glass near the top of the upper sash. If the glass is

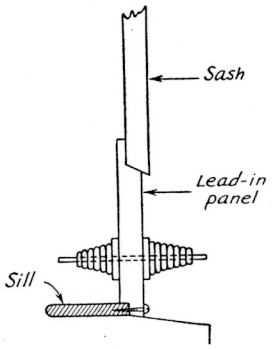

Fig. 1706 — An antenna lead-in panel may be placed over the top sash or under the lower sash of a window. Sealing the overlapping joint will make it weatherproof.

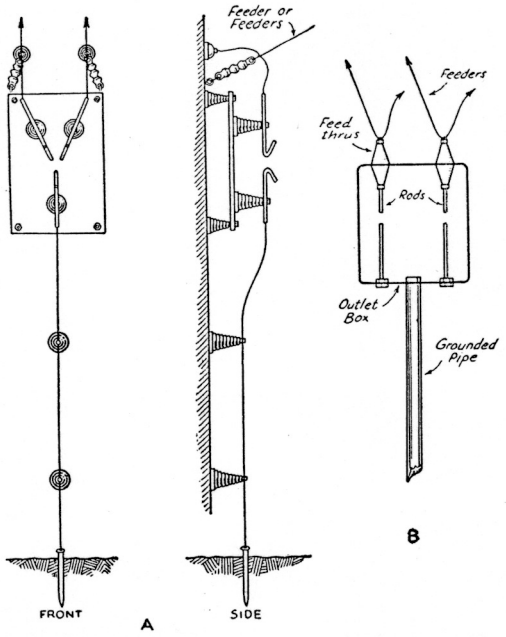

Fig. 1707 — Low-loss lightning arresters for transmitters.

replaced by plate glass, a stronger job will result. Plate glass may be obtained from automobile junk yards and drilled before placing in the frame. The glass itself provides insulation and the transmission line may be fastened to bolts fitting the holes. Rubber gaskets cut from inner tube will render the holes waterproof. The lower sash should be provided with stops at a suitable height to prevent damage when it is raised. If the window has a full-length screen, the scheme shown in Fig. 1705-B may be used.

As a less permanent method, the window may be raised from the bottom or lowered from the top to permit insertion of a board which carries the feed-through insulators. This lead-in arrangement can be made weatherproof by making an overlapping joint between the board and window sash, as shown in Fig. 1706, and covering the opening between sashes with a sheet of soft rubber from a discarded inner tube.

¶ Lightning Protection

An ungrounded radio antenna, particularly if large and well elevated, is a lightning hazard. When grounded, it provides a measure of protection. Therefore, grounding switches or lightning arresters should be provided. Examples of construction of low-loss arresters are shown in Fig. 1707. At A, the arrester electrodes are mounted by means of stand-off insulators on a fireproof asbestos board. At B, the electrodes are enclosed in a standard steel outlet box. The gaps should be made as small as possible without danger of breakdown during operation. Lightning-arrester systems require the best ground connection obtainable.

The most positive protection is to ground the antenna system when it is not in use; grounded flexible wires provided with clips for connection to the feeder wires may be used. The ground lead should be short and run, if possible, directly to a driven pipe or water pipe where it enters the ground outside the building.

¶ Antenna Switching

It is often desirable, particularly in DX work, to use the same antenna for transmitting and receiving. This requires switching of

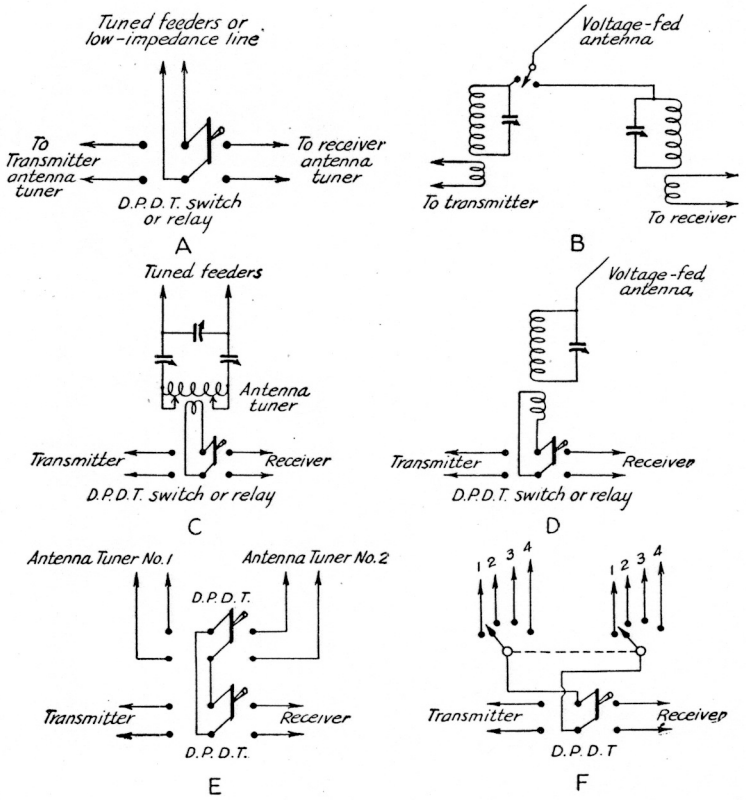

Fig. 1708 — Antenna-switching arrangements for various types of antennas. A — For tuned lines with separate antenna tuners or low-impedance lines. B — For a voltage-fed antenna. C — For a tuned line with a single tuner. D — For a voltage-fed antenna with a single tuner. E — For two tuned-line antennas with a tuner for each antenna or for two low-impedance lines. F — For several two-wire lines.

antenna from transmitter to receiver. One of two general systems may be employed. In the first, the transmitter and receiver each are provided with an antenna tuner, and the antenna transmission line is switched from one to the other. In the second system, one antenna tuner is provided for each antenna and the switch is in the low-impedance coupling line. Several typical arrangements are shown in Fig. 1708.

The high voltages which develop on tuned lines require switches and wiring having good insulation. Frequently relays with low-capacity contacts are substituted for manually operated switches. Either way is satisfactory.

¶ Rotary Beam Construction

Many amateurs mount the simpler types of directive antennas in such a way that the antenna can be rotated to shift the direction of the beam at will. Obviously the use of such rotary antennas is limited to the higher frequencies, if the structure is to be of practicable size. For this reason the majority of rotary-beam antennas are constructed for use on 14 Mc. and higher frequencies. The problems in rotary-beam construction are those of providing a suitable mechanical support for the antenna elements, furnishing a means of rotation, and attaching the transmission line so that it does not interfere with the rotation of the system. The antenna elements usually are made of metal tubing so that they will be at least partially self-supporting, thus simplifying the rotating structure. The large diameter of the conductor is beneficial also in reducing resistance, which becomes an important consideration when close-spaced elements are used.

When the elements are horizontal a supporting structure is necessary, made usually of light but strong wood. Dural tubes often are used for the elements, and thin-walled corrugated steel tubes with copper coating also are available for this purpose. The elements frequently are constructed of sections of telescoping tubing, making length adjustments quite easy. Electricians' thin-walled conduit also is suitable for rotary-beam elements.

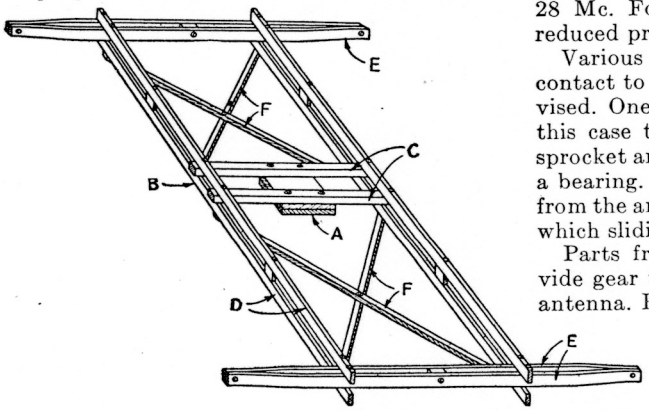

Fig. 1709 — An easily built supporting structure for horizontal rotary beams. Made chiefly of 1 × 2s, the structure is strong yet light in weight. Antenna elements are supported on stand-off insulators on the *E* arms. Length of the *D* sections depends on element spacing.

An easily constructed supporting frame for a horizontal rotary beam is shown in Fig. 1709. It may be made of 1 × 2 lumber, preferably oak for the center sections and white pine or cypress for the outer arms. The self-supporting tubing antenna elements are intended to be mounted on stand-off insulators on the arms marked *E*. The square block at the center (*A*) may be fastened to the pole by any convenient means. The dimensions of such a structure will, of course, depend upon the type of antenna system used. It is particularly well suited for a half-wave antenna with a single director or reflector on 14 Mc., or a three-element beam on 28 Mc. For 56 Mc., the dimensions may be reduced proportionally. (*Bib. 1.*)

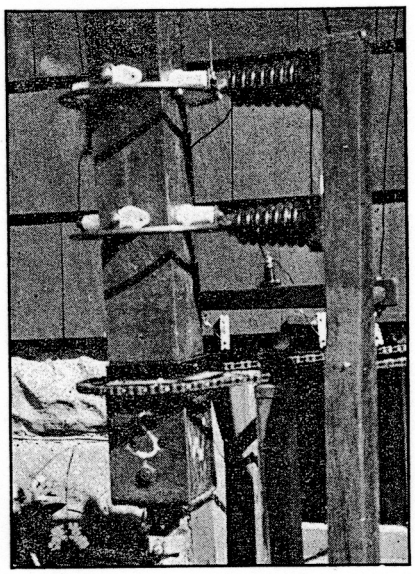

Fig. 1710 — One form of rotating mechanism. A bicycle sprocket and chain turn the pole which supports the beam antenna. Feeder connections from the antenna are brought to the metal rings, which slide against spring contacts mounted on the large stand-off insulators.

Various means of rotation and of making contact to the transmission line have been devised. One method is shown in Fig. 1710. In this case the pole is rotated by a chain-and-sprocket arrangement, with the base resting on a bearing. Feeders are brought down the pole from the antenna to a pair of wire rings, against which sliding contacts press. (*Bib. 2.*)

Parts from junked automobiles often provide gear trains and bearings for rotating the antenna. Rear axles, in particular, can readily be adapted to the purpose. Some amateurs use motor-driven rotating mechanisms which, although complicating the construction, simplify remote control of the antenna. More or less elaborate indicating devices, which show the direction in which the antenna is pointed, often are used with motor-driven beams.

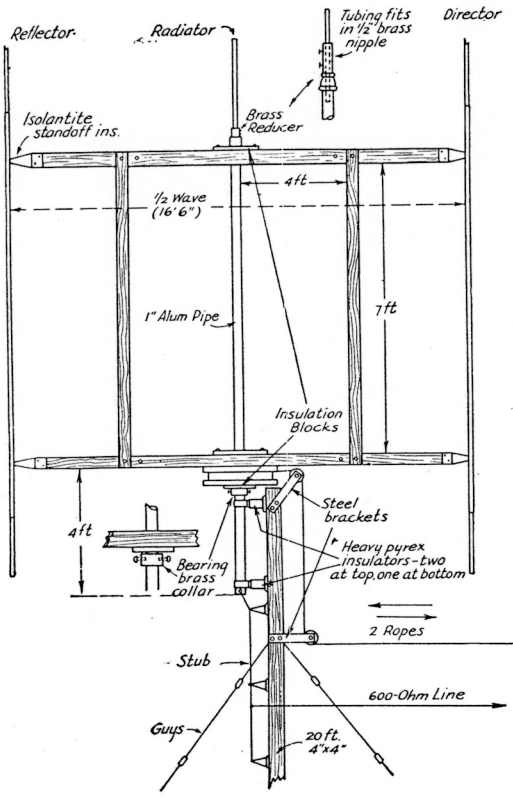

Fig. 1711 — A practical vertical-element rotatable array for 28 Mc. No special feeder-contact mechanism is needed, since the driven antenna is fixed. The reflector and director elements, parasitically excited, rotate around it. Close-spaced elements may be used if desired.

The full benefit of a rotating directive antenna is realized only when the system is unidirectional, since such an antenna affords maximum reduction of interference and noise in reception. A unidirectional antenna also reduces interference to other stations not along the line of transmission. Bi-directional systems, while somewhat less advantageous from this standpoint, are mechanically somewhat easier to build, because it is necessary to rotate the antenna only through 180 degrees rather than 360. Thus feeder contact is not so difficult a problem. When the antenna is designed for 360-degree rotation it is preferable to have the feeders arranged so that continuous rotation is possible, rather than to have a stop at some point on the circle. This avoids the necessity for retracing almost the whole circle when moving the antenna from one side of the stop to the other.

Fig. 1711 shows a mechanical arrangement suitable for use with vertical elements. The antenna, which is a vertical section of metal tubing, is mounted in a fixed position and is provided with a director and reflector which rotate about it. The advantage of this arrangement is that no provision need be made for special contacts between the antenna and the feeder system, since the position of the antenna is fixed. A rope-and-pulley arrangement provides rotation from the operating room, so that, when a signal is picked up, the antenna can be rotated rapidly to the position which gives maximum response. It is then also pointing in the proper direction for transmission. The system can be varied in details; for instance, close element spacing might be used to give greater gain. (*Bib. 3*).

Fig. 1713 — A simple form of end-fire array as used at W2JCR. The two copper-tubing elements are curved in and run down the pole to form part of the feed line.

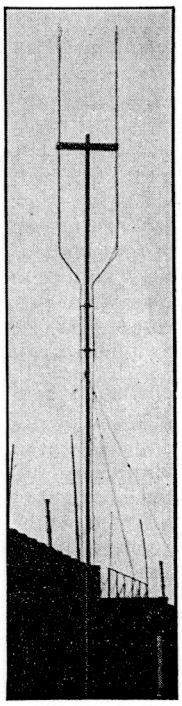

V.H.F. Antennas

Although antennas for the very-high frequencies are constructed on the same principles as those for lower frequencies, the smaller dimensions permit structural arrangements which would be unwieldy, if not impossible, on lower frequencies. The extended double Zepp, used vertically, is particularly easy to mount, the elements being made of ¼-inch copper or dural rod or tubing and fastened to the side of a pole by stand-off insulators. Two arrangements are shown schematically in Fig. 1712. The open-wire feeder is better if the line is long, the losses being lower than with twisted pair. (*Bib.* 4.)

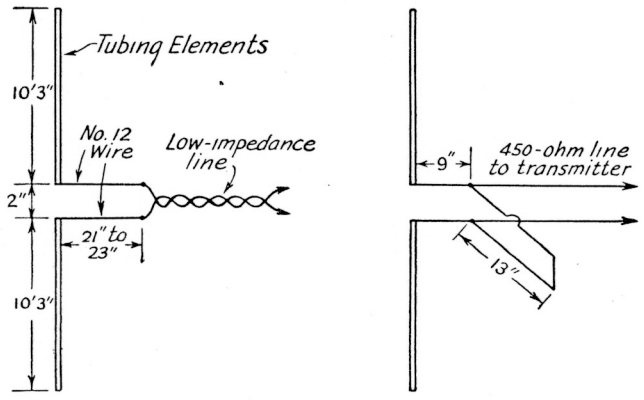

Fig. 1712 — Two methods of feeding an extended double Zepp type of collinear array. The dimensions given are for the 56-Mc. band, and should be halved for 112 Mc. The 450-ohm line may be made of No. 12 wire with 2-inch spacing. The stub should be adjusted for minimum change in the final tank tuning when the line is coupled to the transmitter.

A simple application of the end-fire principle is shown in Fig. 1713. Two lengths of copper tubing are bent to form a "pitchfork" a half-wavelength long (down to the bend) and with a quarter- to an eighth-wavelength separation. If the pole can be made to rotate 180°, full advantage can be taken of the directivity of the system. Tuned feeders may be used if the length is not more than one or two wavelengths; for greater lengths an untuned line and a matching stub are desirable. (*Bib. 5.*)

Combination arrays as described in Chapter Ten give good gain and are not difficult to construct. One practical application is shown in Fig. 1713. The elements can be of wire or tubing. The assembly can be simply wires hung from a rope stretched between two supports, or it can take the form of a more permanent structure, as shown in the photographs.

Mobile Antennas

For mobile work on the very-high frequencies a rod or "whip" antenna frequently is used, generally mounted vertically from one or a pair of stand-off or feed-through insulators fastened to the car body. If possible, the antenna should be a half-wavelength long, since this length will give best two-angle radiation. A quarter-wave antenna, working against the metal car body as a counterpoise or "ground," can be used but is not as efficient a radiator as the half-wave antenna. The antenna should be placed as high on the car as circumstances permit.

It is advantageous to mount the antenna near the transmitter so that the feeder will be short. This will obviate the necessity for special feeder systems, such as concentric lines, which are highly desirable if the antenna is at one end of the car and the transmitter at the other. A quarter-wave tuned line is a suitable feeder, using appropriate tuning methods. When used with an end-fed half-wave antenna, the feeder end not connected to the antenna may either be left open or grounded to the car body. For details, see Chapter Sixteen.

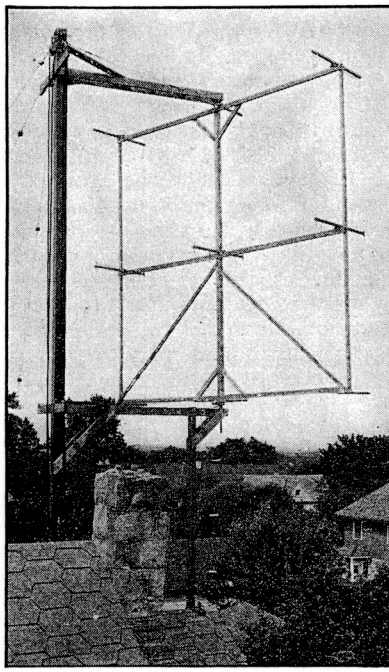

Fig. 1714 — The 112-Mc. directive array at W2CUZ uses two collinear sets of three broadside driven elements, backed by parasitic reflectors. The system is rotatable.

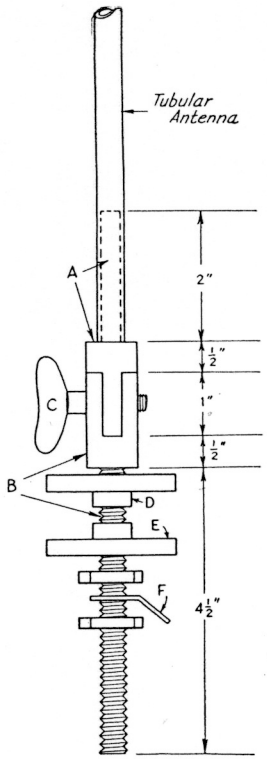

Fig. 1715 — Fitting for a hinged vertical car-roof mobile antenna. By loosening the thumb screw *C*, the antenna may be folded down parallel to the roof of the car.

Fig. 1715 shows a fitting for a vertical car-roof antenna which folds parallel to the car roof. Pieces *A* and *B* are made of ¾-inch brass rod, ¾ inch in diameter. One end of piece A is turned down to fit inside the tubular antenna, which is soldered fast. A tongue 1 inch long and ¼-inch wide is cut on the other end.

One end of piece *B* is turned down and threaded with a ⅜-inch die, while a slot, 1 inch deep and ¼ inch wide is cut in the opposite end to fit the tongue of *A*. The slotted end is drilled and tapped for the ¼-inch thrumbscrew, *C*. A vertical elongated hole is filed out in the tongue so that, with the thumbscrew loosened, *A* can be lifted to clear the shoulders of *B* while the antenna is being folded down.

Two polystyrene washers, *D* and *E*, provide insulation. Each has a hub ¼-inch thick turned on one side to fit through a hole in the car roof. The assembly is clamped to the roof by the locking nuts. *F* is a soldering lug for making the connection to the antenna.

If the assembly is placed near the forward part of the roof, the antenna will fold back without overhanging the rear of the car.

Bibliography

[1] Lynch, "Some Thoughts on Rotary Beam Antennas," *QST*, October, 1938.

[2] Blaho, "Simplifying the Rotary-Antenna Mechanism," *QST*, October, 1938.

[3] Neuenhaus and Schreiner, "A Continuously-Rotatable 28-Mc. Beam," *QST*, March, 1938.

[4] Lynch, "More Thoughts on Effective Antennas," *QST*, November, 1939.

[5] Taylor, "Diversity with What You Have," *QST*, September, 1939.

CHAPTER EIGHTEEN

Carrier-Current Communication

WARTIME restrictions on radio communication have led many amateurs into the experimental investigation of non-radio methods of communication. A number of such methods have been explored — including induction-field, ground-current, light-beam and supersonic transmission — but the only one to achieve widespread use is carrier-current (wired-wireless) transmission. Hundreds of individuals in various sections of the country now are engaged in experimental communication using this method.

Although carrier-current communication systems have been in use for many years by telephone and power companies, the subject is a relatively new one to radio amateurs. For this reason, it seems appropriate to preface this chapter with a brief résumé of the principles involved, the results which may be reasonably expected, and the difficulties which may be encountered.

Carrier-Current Fundamentals

Essentially, carrier-current communication is similar to radio communication. The process is one of impressing modulation, either in the form of voice or the telegraph code, on a radio-frequency carrier (§ 4-1; § 5-1) and then demodulating the carrier at the receiving end. The only difference is in the medium by which the r.f. carrier wave is transported.

Since most amateurs are familiar with the feeders or transmission lines commonly used to feed antennas, the basic principles of the carrier-current system can be explained by saying simply that it is communication by means of feeder wires or transmission lines. R.f. energy is fed into the transmission line by a transmitter at the sending station, and is delivered to a receiver (instead of an antenna) coupled to the distant end of the line. For communication by this method the transmission line is, therefore, a prerequisite.

While telephone companies, which use the carrier system to carry several conversations simultaneously over a single conductor for long-distance circuits, employ lines especially designed for the purpose, the electric power companies have very successful systems operating over the same high-tension lines by which power is distributed from central generating plants. This leads to the thought of using the same lines which supply electric power to our homes as the transmission lines required for carrier-current communication, since all homes within a wide area usually are coupled to the same power system in one way or another.

Frequencies — A balanced feeder system radiates very little energy compared with the radiation from an antenna at the high frequencies normally assigned for amateur use in peacetime. Nevertheless, even a well-balanced two-wire line will radiate more energy at these frequencies than is permitted under wartime restrictions. Since radiation from a given conductor decreases as the frequency is lowered, most carrier-current systems operate at frequencies lower than 200 kc.

From the private experimenter's point of view, there is an even more important reason for using low frequencies. Power lines feeding the average home ordinarily are extremely poor transmission lines for high-frequency currents. Not only are these lines shunted by very low impedances in the house itself — lamps, heaters, b.c. receivers, motors and other appliances which consume r.f. energy — but the lines, once outside the house, are interrupted by transformers whose high capacities shunt much of the remaining energy to ground. For these reasons it may be said that, in general, the lower the frequency the better the performance for carrier-current work.

There are other considerations which limit the advisable extent to which the frequency may be lowered for purposes of private communication, however. It happens that the public utilities operating carrier circuits make use of the frequencies below 160 kc. Since individuals will not want to run the risk of creating interference with vital services, the very low frequencies are to be avoided. Another reason for giving preference to somewhat higher frequencies is that their use reduces, to a certain extent, the very real problem of supplying the large values of inductance and capacity required for oscillator tank circuits. Frequencies of 160 to 200 kc. are sufficiently low for reasonably successful work and avoid the range commonly used by public-utilities systems.

Operating restrictions — Although no Federal license is required for the operation of carrier-current equipment, there are two restrictions which must be observed. The first of these is the FCC regulation (Sec. 2.102) which limits the *radiation* field strength to a value of 15 microvolts per meter at a distance in feet of $157{,}000/f_{kc.}$, where $f_{kc.}$ is the frequency in kilocycles. At a frequency of 150 kc., for example, the radiation field strength should not exceed 15 microvolts at a distance of 157,000/150 or 1046 feet from any power line which may be carrying r.f. from the transmitter.

The second restriction is one imposed in certain regions by military authorities, in the form of public proclamations prohibiting the use of *any* equipment capable of being employed for communication within specified restricted zones. These zones are designated by notices posted at every local selective service board office, post office, court house or town hall within each restricted zone. Where such a military order is in effect, it means that carrier-current communication (as well as any other kind) is specifically prohibited in the area.

As might be expected, the noise level of most domestic power lines is rather high. To overcome this difficulty, the use of high transmitter power might seem desirable. However, because of the legal limitation on radiation field strength previously mentioned and the fact that harmonic output must be kept low to prevent interference with broadcast reception, the use of transmitter power inputs exceeding 50 watts or so is seldom advisable.

Ranges — Since performance depends so largely upon line conditions, it is impossible to predict with any degree of accuracy the distance range which may be expected with amateur carrier-current installations. In general, greater distances can be covered in rural districts, where open-wire lines are more often employed, distribution transformers are less frequent, and loading is less along the line. In the cities ranges usually will be less, because much of the wiring is carried in grounded conduit and the distances between loading points are short. However, the city dweller has an advantage in that usually he does not need to cover as great a distance to find someone with whom to communicate, because of the greater density of population. With transmitter power inputs of 25 watts or less, distances up to five miles often are reported in metropolitan areas. Rural stations frequently are able to increase their ranges to ten miles or more. It should be remembered that, to cover an air-line distance of three or four miles between transmitting and receiving stations, the signal may have to travel a considerably greater distance in following the power lines.

The fact that two stations may receive power from different distribution systems does not necessarily mean that communication is impossible, since there is evidence that the signal may be transferred from one line to another by induction provided the two lines run close together at some point.

The useful range usually is greater in the daytime than at night because line loading is less during the day. For the same reason, the noise level is lower in the daytime and during the late hours at night than it is in the middle of the evening.

While both telegraphic and voice communication have been carried on successfully, telegraphy will carry better through noise and more advantage may be taken of the noise-reducing properties of a selective receiver. A high percentage of modulation is advisable for 'phone work.

Getting started — The best first step for anyone interested in getting started in carrier-current work is to find someone not too distant from his location to work with him. Watch the pages of *QST*'s "Experimenter's Section" for the names of other interested persons in the community. Having located another enthusiast, one can build the transmitter while the other takes on the job of making the receiver or converter. If the receiver is so designed that it may be operated in a car, so much the better, since it will then be possible to form a good idea of where and how far the signal is traveling by following power lines. Tests also can be made at a distance to determine the effects of experimental adjustments at the transmitter. Such tests eliminate much of the guesswork ordinarily connected with an experimental carrier-current system.

¶ Station Equipment

Except for the antenna, the apparatus required for carrier current consists of the same units as used in radio communication — transmitter, receiver, power supplies, modulator (if used) and microphone or key. The apparatus may consist of anything from a simple self-excited oscillator for the transmitter and

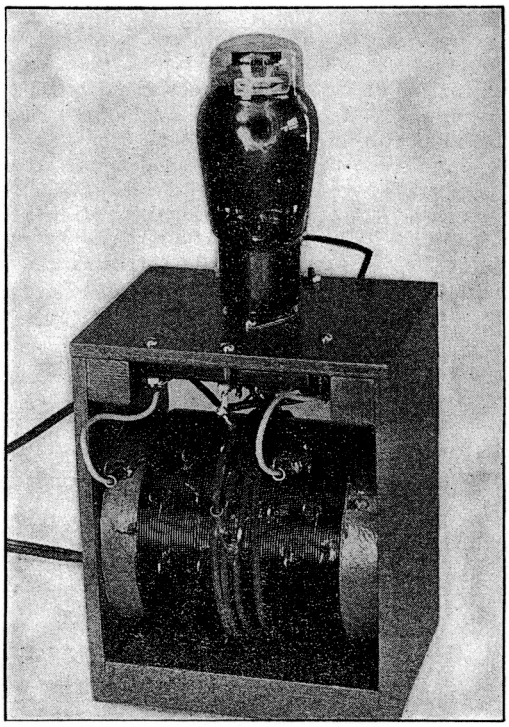

Fig. 1801 — A 25-watt 6L6 transmitter for wired wireless. Since variable condensers large enough to give sufficient frequency change are difficult to secure unless paralleled b.c. receiver gangs are used, a tapped coil is used for tuning. Circuit diagram is shown in Fig. 1804.

a regenerative receiver (if c.w. alone is used) to a modulated m.o.p.a.-type rig with a superheterodyne receiver or a converter working into a communications or broadcast receiver which is used as the i.f. and a.f. amplifier. Representative examples of the kinds of equipment commonly used are shown in the photographs and diagrams which appear throughout this chapter.

Checking frequency — The frequency of the transmitter may be checked by picking up harmonics on a near-by broadcast receiver. For example, when the transmitter is tuned to 150 kc. the fourth harmonic will be heard at 600 kc., the fifth harmonic at 750 kc., the sixth harmonic at 900 kc., etc. The number of kilocycles between any consecutive pair of harmonics will give the transmitter frequency. If harmonics are separated more than 200 kc. the transmitter frequency is too high, while a separation of less than 150 kc. will indicate that the transmitter frequency is too low. Frequencies of 150 kc. and 200 kc. are most suitable for checking in this manner, since their harmonics fall in broadcasting-station channels where the beats with the broadcast signals are easily spotted.

It is advisable to move the transmitter frequency to a setting such that the harmonics fall between broadcast channels and, in particular, well away from the frequencies used by local stations, to avoid interference with neighboring listeners.

Coupling to line — Various methods of coupling the output of the transmitter to the power line may be used, as shown in Fig. 1802. In these circuits, C_1 serves a dual purpose as both blocking and tuning condenser for the line circuit. The value to be used depends to a considerable extent on the line constants, and should be determined experimentally. In practice, it has been found that the capacity required varies from about 0.01 μfd. to as much as 0.05 μfd. The condenser used must be capable of withstanding the line voltage. The coupling coil, L_1, should be of sufficient size to provide the necessary coupling to the final tank circuit. It is advisable to start out with a fairly large coil, wound over the final tank coil and tapped every few turns so that the loading can be adjusted.

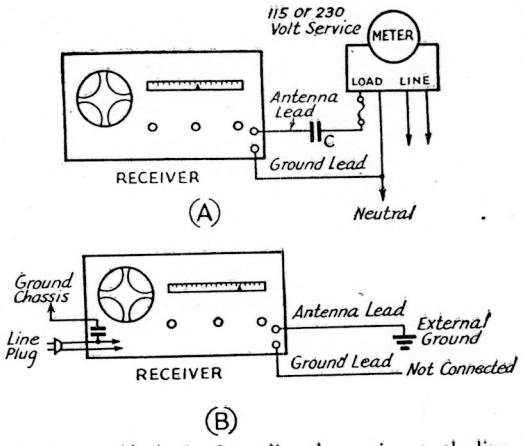

Fig. 1803 — Methods of coupling the receiver to the line.

While it is possible to work without the use of load-isolating filters if the necessary material is not available for their construction, a considerable improvement in over-all efficiency can be obtained by their use, since a large percentage of the total power loss may be attributed to the house load. It can be seen from diagrams C and D, Fig. 1802, that the purpose of the filters is to prevent the radio-frequency power from being expended in the shunt load normally connected to the house side of the meter.

It should be borne in mind that the inductance coils in the isolating filters must have sufficient current-carrying capacity for the total connected load without causing any serious loss of voltage at the line frequency. C_2 does not have to withstand any considerable voltage but must have the proper capacity to tune the coil, L_2, to the operating frequency. As in the case of the tank circuit, a wide range of values may be used. If a 0.005-μfd. mica condenser is used for C_2, a coil which will resonate at approximately 150 kc. may be wound with 70 turns of No. 14 enameled wire on a 3½-inch form. The voltage drop in such a coil should be negligible under normal house-wiring loads.

Where the street side of the meter is accessible the transmitter

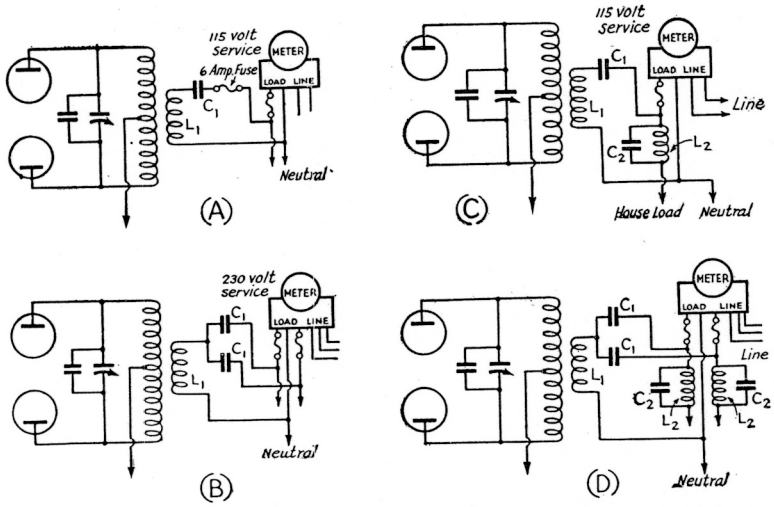

Fig. 1802 — Methods of coupling the carrier-current transmitter to the power line.

may be coupled to the line on that side, thereby avoiding the necessity for feeding r.f. through the meter.

Suggested methods for coupling the receiver to the power line are shown in Fig. 1803.

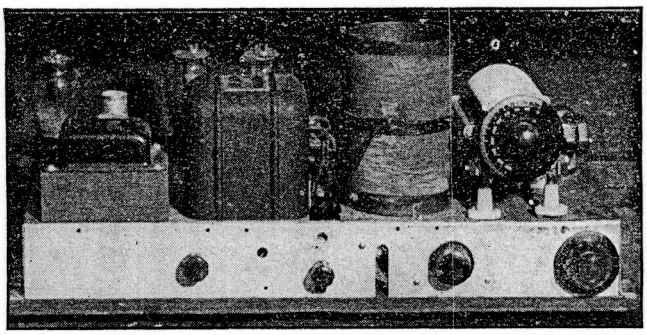

Fig. 1805 — M.o.p.a.-type carrier-current transmitter. Transmitter, modulator and power supply are on one chassis, arranged for remote control from the operating position. The final tank coil and tuning condenser are at right. Circuit diagrams are shown in Figs. 1806 and 1807.

¶ Transmitter Construction

Hartley 6L6 transmitter — A carrier-current transmitter of the simplest type is pictured in Fig. 1801. The circuit, shown in Fig. 1804, is the conventional series-fed Hartley. The tank condenser, C_1C_2, consists of two 0.006-μfd. mica condensers connected in series (to decrease the possibility of breakdown). Frequency and excitation are adjusted by selection of the proper taps on the coil. The output or "antenna" coupling is adjusted by the proper selection of the condensers in series with the coupling coil, L_2.

The inductance is wound on a Quaker Oats carton, which is a convenient source for 3½-inch diameter cardboard tubing. After the contents have been removed and the box cut down to a length of about 4¾ inches, the cardboard should be given a coat or two of shellac. Then 80 turns of No. 18 enameled wire must be wound on, as tightly as possible. Taps are made at every 5th turn, making a 1-inch loop of wire at each tap and twisting it tightly for several turns so that the loop will not pull apart as the rest of the coil is wound. When the coil is finished the loops should be scraped bare of insulation, using a knife or fine sandpaper. As a finishing touch, spots of Duco cement may be applied to secure the twisted portions in place.

The framework used to support the coil and other components is made of ¼-inch plywood, except for the two corner strips at the top, which are of ½-inch square stock, and the two 1 × 2-inch bottom strips. The whole assembly is held together by brads and glue. The box is made just wide enough to allow the coil to be forced in, the pressure of the sides then serving to hold the coil firmly in place. The box measures 6⅞ inches high, 5¼ inches long, and 4¼ inches deep.

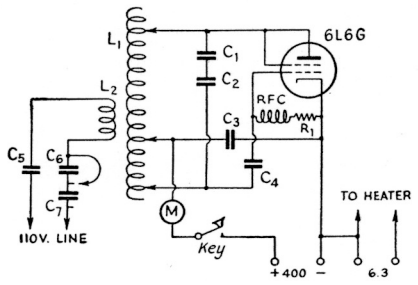

Fig. 1804 — Circuit of the 25-watt 6L6 transmitter.
C_1, C_2 — 0.006-μfd. mica, 2500 volts.
C_3, C_5 — 0.1-μfd. paper, 600 volts.
C_4 — 100-μμfd. mica.
C_6, C_7 — 0.05-μfd. paper, 600 volts.
R_1 — 50,000-ohm wire-wound, 10-watt.
RFC — 80-mh. r.f. choke (Meissner 19–2709).
L_1 — 80 turns No. 18 e., close-wound on 3½-inch diameter form, tapped every 5th turn.
L_2 — 4 turns No. 18 rubber-covered wire, wound over the center of L_1.

The tube socket is submounted in a hole in the center of the top of the framework. The tank condensers, C_1 and C_2, are fastened underneath by screws. The grid choke, *RFC*, is supported on a ½-inch pillar attached to the rear screw holding the socket. The coupling condensers, C_5, C_6 and C_7, are supported on lugs under the heads of screws which serve also for coupling taps at the rear of the box. Flexible leads from the coil are fastened to the terminals of the tank condensers.

When completed, the transmitter should be hooked up to a power supply delivering 350 or 400 volts at 100 ma. A meter and key should be connected in the positive high-voltage lead, as shown in Fig. 1804. While there may be some objection to placing the key in the positive lead, there is a measure of safety in the fact that, as long as the operator's hand is off the key (as it would be when making adjustments) there is no chance for shock when adjusting the coil taps. Care must be exercised, of course, and it is recommended that all tuning adjustments be made with one hand in the pocket.

Initial tuning-up should be done without the oscillator coupled to the line. Set the clips so that there are 60 turns between grid and plate, and attach the cathode tap at 25 turns from the grid end. Press the key and read the plate current; then try again with the cathode tap on either side of the first position. The setting of the cathode tap which gives the lowest plate-current reading is the one to use. With a 350-volt supply, the no-load plate current should run around 25 or 30 ma.

The next step is to connect the output circuit to the line. Set the coupling clip so that neither C_6 nor C_7 is being shorted (the condition of loosest coupling). The plate current under load should increase to 30 or 40 ma., depending upon the frequency of the transmitter.

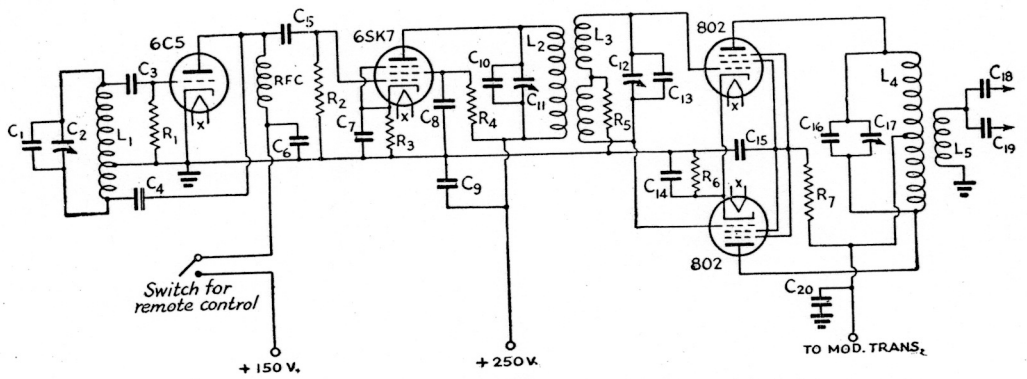

Fig. 1806 — Circuit diagram of the master-oscillator power-amplifier wired-wireless transmitter.

C_1 — 0.002-μfd. mica.
C_2 — 350-μfd. variable.
C_3 — 500-μμfd. mica.
C_4 to C_9, inc. — 0.1-μfd. paper, 600 volts.
C_{10} — 0.002-μfd. mica, 2500 volts.
C_{11}, C_{12} — 350-μμfd. variable.
C_{13} — 0.002-μfd. mica, 2500 volts.
C_{14} — 0.1-μfd. paper, 600 volts.
C_{15} — 0.002-μfd. mica, 1000 volts.
C_{16} — 0.002-μfd. mica, 5000 volts.
C_{17} — 350-μμfd. variable.
C_{18}, C_{19} — These condensers correspond to C_1 in Fig. 1802.
C_{20} — 0.002-μfd. mica, 1000 volts.
R_1 — 0.1 megohm, 1-watt.
R_2 — 50,000 ohms, 1-watt.
R_3 — 300 ohms, 1-watt.
R_4 — 50,000 ohms, 1-watt.
R_5 — 20,000 ohms, 1-watt.
R_6 — 300 ohms, 10-watt.
R_7 — 15,000 ohms, 10-watt.
L_1 — 160 turns No. 28 e. on 1½-inch form, tapped 50th turn from bottom.
L_2 — 90 turns No. 22 e. on 3-inch form.
L_3 — 90 turns No. 22 e. on same form as L_2, half each side of L_2.
L_4 — 80 turns No. 18 e. on 3½-inch form, tapped at center.
L_5 — See section on coupling.
RFC — 30-mh. choke.

The quality of the note can be checked by listening to a harmonic with the communications receiver set to its lowest frequency range. As the coupling is increased the note will become rough or "yoopy", indicating that the coupling is too tight or that the cathode tap needs adjustment. The note will roughen up before it chirps; the roughness can be tolerated, but the chirp makes copying difficult.

Be careful when making adjustments — you will have deliberately hooked onto the 115-volt line, and you can get a good shock from it!

M.o.p.a. transmitter — The photograph of Fig. 1805 illustrates a typical transmitter of the m.o.p.a. type. The circuit diagram appears in Fig. 1806. The tube line-up consists of a 6C5 Hartley oscillator, 6SK7 buffer, and push-pull 802 final amplifier. In addition to the r.f. circuits, the chassis also includes a plate-and-screen modulator for 'phone work, and a power supply. The wiring diagram of the modulator unit is shown in Fig. 1807.

This transmitter operates at an input of about 20 watts, with a final plate current of 70 ma. and screen current of 30 ma. It is, however, capable of handling higher power with increased final-amplifier plate and screen voltages.

Almost any combination of tubes could be used in a similar arrangement. Triodes will require neutralizing circuits, of course.

Combination transmitter-receiver — In Fig. 1808 is shown the circuit diagram of a c.c. transmitter-receiver. The receiver consists of a 6SJ7 regenerative detector and a single-stage audio amplifier with a 6C5, preceded by an untuned stage of r.f. using a second 6SJ7 with the hot side of the power line tied directly to the grid. The detector is quite conventional. R_7 is the regeneration control. The receiver coils, L_1, L_2 and L_3, are scramble-wound with No. 32 enameled wire, on a piece of cardboard tubing about one and one-half inches in diameter. The secondary, L_2, should be wound on first and covered with a layer of friction tape. The primary, L_1, is then wound close to the grid end of L_2, and the tickler, L_3, close to the ground end. Finally, the entire coil should be given another covering of friction tape.

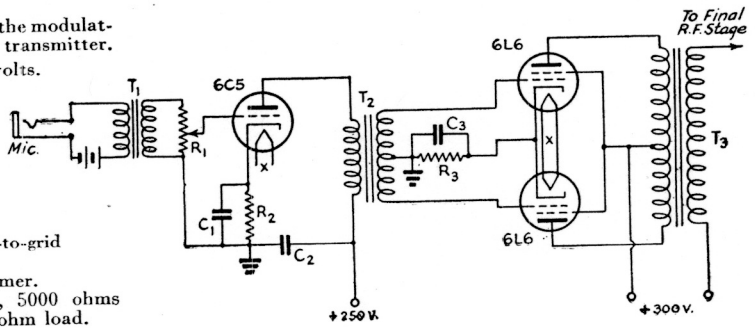

Fig. 1807 — Circuit diagram of the modulator used with the m.o.p.a. c.c. transmitter.

C_1 — 10-μfd. electrolytic, 25 volts.
C_2 — 8-μfd. electrolytic, 450 volts.
C_3 — 10-μfd. electrolytic, 50 volts.
R_1 — 0.5-megohm volume control.
R_2 — 1000 ohms, 1-watt.
R_3 — 125 ohms, 10-watt.
T_1 — Single-button microphone-to-grid transformer.
T_2 — Interstage audio transformer.
T_3 — Modulation transformer, 5000 ohms plate-to-plate to 3000-ohm load.

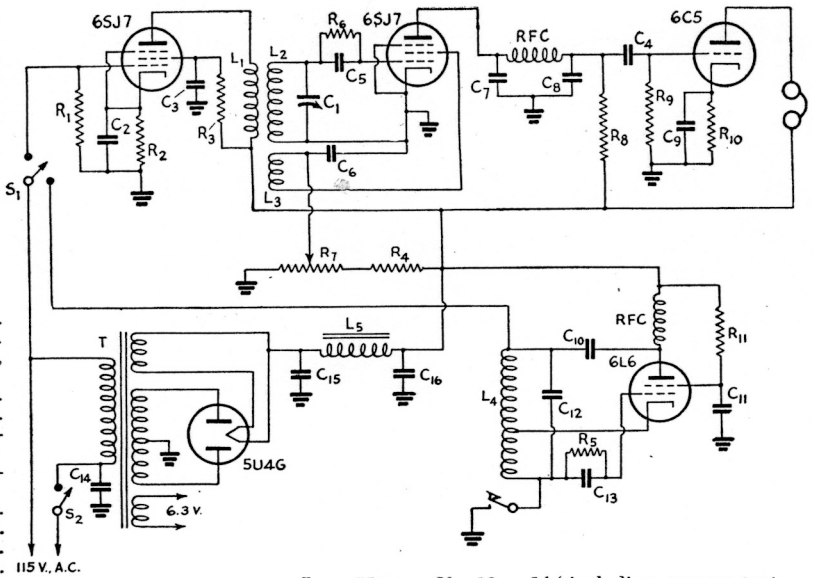

Fig. 1808 — Circuit diagram for a combined transmitter-receiver for carrier-current communication.

C_1 — 700-$\mu\mu$fd. variable.
C_2, C_3, C_4 — 0.01 μfd.
C_5 — 250-$\mu\mu$fd. mica.
C_6 — 0.25 μfd.
C_7, C_8 — 500-$\mu\mu$fd. mica.
C_9 — 0.1 μfd.
C_{10}, C_{11} — 0.002 μfd.
C_{12} — 0.006 μfd.
C_{13} — 250-$\mu\mu$fd. mica.
C_{14} — 0.1 μfd.
C_{15}, C_{16} — 8 μfd., 450 volts.
R_2 — 1000 ohms, 1-watt.
R_3, R_4, R_5 — 50,000 ohms, 1-watt.
R_6 — 2 megohms, ½-watt.
R_7 — 50,000-ohm variable.
R_8 — 0.25 megohm, ½-watt.
R_9 — 0.1 megohm, ½-watt.
R_{10} — 2500 ohms, 1-watt.
R_{11} — 15,000 ohms, 1-watt.
RFC — 25 mh. to 80 mh.
S_1 — S.p.d.t. toggle switch.
S_2 — S.p.s.t. toggle switch.
T — Power transformer: 350–0–350, 5 and 6.3 volts.
L_1 — 100 turns No. 32 e., 1½-inch diameter; see text.
L_2 — 300 turns Bo. 32 e., 1½-inch diameter; see text.
L_3 — 75 turns No. 32 e., 1½-inch diameter; see text.
L_4 — 150 turns No. 18 e., 2¼-inch diameter, tapped at 50 turns from grid end.
L_5 — 15- to 30-henry filter choke.

The ground connections which are shown in the diagram indicate connections to the chassis and not to actual earth.

The transmitter is a regulation Hartley oscillator using a 6L6G. With the plate voltage available the input runs about 12 watts. The note should be crystal d.c.

The power supply is common to both the receiver and transmitter, the receiver acting as a bleeder for the supply.

All condensers are of the tubular type except the transmitter tank condenser, the grid condensers, and the variable used for detector tuning. The latter is a two-section gang condenser of 365 $\mu\mu$fd. capacity per section, with both sections in parallel. If the system shown in the circuit diagram is used, all ground connections shown must be made to the chassis and not to actual ground; otherwise, the key will short-circuit the line. The chassis must not be grounded. If it is desired to ground the chassis for safety, place C_{14} between the arm of S_1 and the ungrounded side of the line. The chassis may then be grounded and the danger of shock or short-circuit removed. A 25-mh. to 80-mh. r.f. choke inserted between the key and L_4 will improve the keying. A 0.1-μfd. by-pass condenser should then be placed across the key.

Receiver Construction

Receivers for frequencies below 550 kc. are not readily available under wartime conditions. However, almost any superheterodyne receiver can be converted to operate on 150 kc. by making simple changes in the oscillator and tuned circuits.

While the circuits used in superheterodynes vary considerably from one model to another, a typical arrangement is that shown in Fig. 1809. The oscillator circuit, before necessary changes are made, is shown at A, while B is the revised circuit. C_2 is the series tracking condenser in the oscillator circuit; this condenser is removed and connected in parallel with C_1, the oscillator tuning condenser. Fig. 1809-B shows the radio-frequency circuit. L_1 and L_2 are removed and the coils shown in B are connected in place of those removed. The dimensions of the coils are given in the drawing. Coil L_2 has approximately 300 turns and L_1 approximately 25 turns. Both coils may be boiled in wax. After cooling, they should be wrapped with cotton tape so they will hold their form.

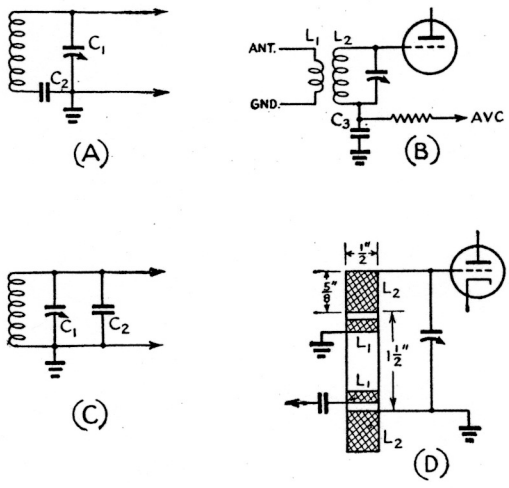

Fig. 1809 — Circuit changes required for converting a b.c. superheterodyne receiver for operation in the 150–160 kc. region. A, normal oscillator circuit; B, revised oscillator circuit; C, normal r.f. circuit (mixer input); D, revised r.f. circuit, showing cross-section of coil for tuning to 150 kc. See text for further description.

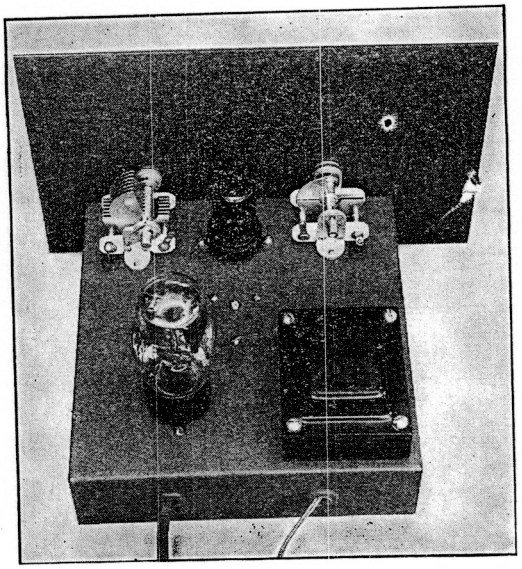

Fig. 1810 — Top view of the superheterodyne carrier-current converter. Note the adjusting screw for the output tank condenser, C_5, in front of the 6SA7 tube.

The simpler regenerative-detector receivers have also been used successfully for carrier-current work. The basic circuit of the simple regenerative receiver described in Chapter Eleven (Figs. 1101–1105) may be used with the provision of suitable coils and tuning condensers. Using a broadcast-type 365-$\mu\mu$fd. variable condenser for C_1, L_1 may be 120 turns of No. 32 enameled wire wound on a 3-inch diameter form and L_2 about 20 turns on the same form as L_1.

The three-tube wide-range general-coverage and bandspread superheterodyne receiver described in the same chapter (Figs. 1111–1119) also is suitable for carrier-current use when the low-frequency coils (range A) are plugged in.

A Superhet Converter — A simple superheterodyne converter for carrier-current work is shown in Figs. 1810 and 1812.

The circuit of the converter, shown in Fig. 1811, is quite conventional. It consists of a 6SA7 mixer tube with the output on 1950 kc., so that it can be hooked into any communications receiver which will tune to 1950 kc. The grid circuit tunes the range 150 to 200 kc. and, in order to give the output frequency of 1950 kc., the oscillator tunes from 1800 to 1750 kc. The oscillator could also be made to tune from 2100 to 2150 kc., but by using the former range it can be checked on a communications receiver which covers only the amateur bands.

The converter is built on a 7 × 7 × 2-inch chassis. The tuning condensers, C_1 and C_3, are bolted to the chassis in a position such as to allow the panel to be supported by their panel bushings. The toggle switch and the screw

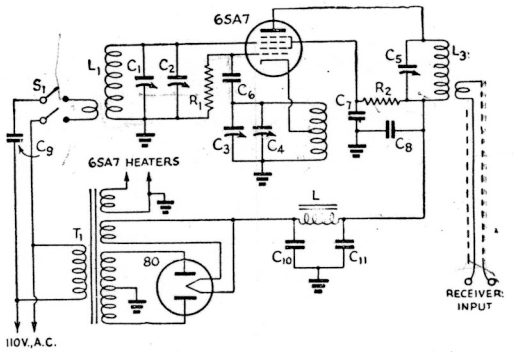

Fig. 1811 — Wiring diagram of the c.c. converter.
C_1 — 100-$\mu\mu$fd. variable (Hammarlund MC-100-S).
C_2, C_5 — 260-$\mu\mu$fd. trimmer (Hammarlund CTS-160).
C_3 — 20-$\mu\mu$fd. variable (Hammarlund MC-20-S).
C_4 — 350-$\mu\mu$fd. mica trimmer (Hammarlund CTS-230).
C_6 — 50-$\mu\mu$fd. mica.
C_7 — 0.1 μfd. paper, 400 volts.
C_8 — 0.01 μfd. paper, 600 volts.
C_9 — 0.1-μfd. paper, 600 volts.
C_{10}, C_{11} — 8-μfd. electrolytic, 450 volts.
R_1 — 20,000 ohms, ½-watt.
R_2 — 20,000 ohms, 1-watt.
S_1 — D.p.s.t. toggle switch.
T_1 — Power transformer, 240-0-240 volts each side of center-tap, 6.3-and 5-volt filament windings (Thordarson T-13R19).
L — 8 henrys, 40 ma. (Thordarson T-13C26).
L_1 — 175-kc. i.f. transformer replacement winding (Carron S735). Antenna winding is 11 turns of No. 32 d.s.c. wire wound over L_1.
L_2 — 43 turns No. 32 d.s.c., close-wound on 1-inch diameter form. Cathode tap at 5th turn from ground end.
L_3 — 50 turns No. 32 d.s.c., close-wound on 1-inch diameter form. Output coil is 14 turns of No. 32 d.s.c., close-wound, ⅛-inch from L_3.

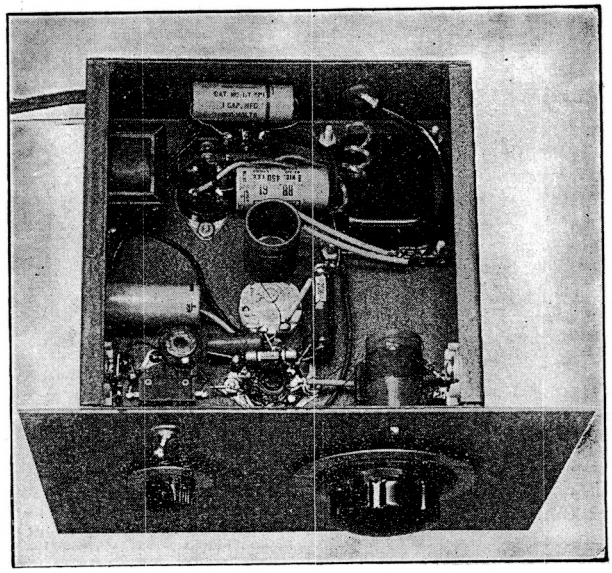

Fig. 1812 — This bottom view of the converter also shows the panel layout. The output tank coil, L_3, can be seen in the center of the chassis; L_2 is directly under the oscillator tuning dial, and the mixer grid coil, L_1, can be seen at the right, next to the toggle switch. Padding condensers C_4 and C_2 are mounted on the left- and right-hand sides of the chassis, beneath their respective tuning condensers.

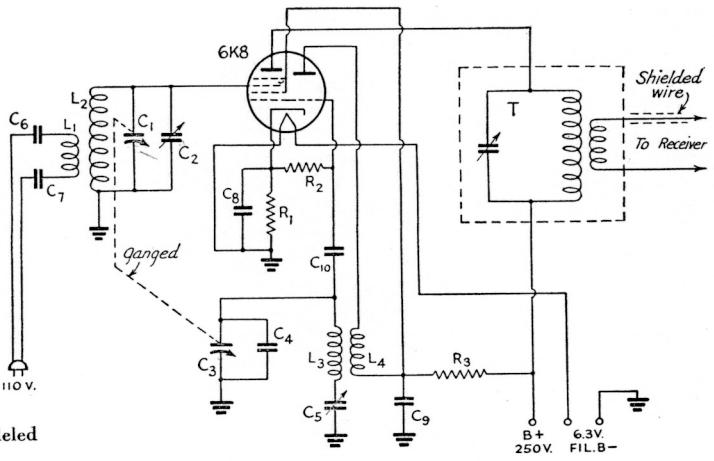

Fig. 1813 — Circuit diagram of the low-frequency carrier-current converter. The oscillator range is 1710 to 1950 kc. for 1600-kc. i.f.

C_1 — 250-$\mu\mu$fd. variable.
C_2, C_4 — 3–30-$\mu\mu$fd. mica trimmer.
C_3 — 250-$\mu\mu$fd. variable with 9 rotor plates removed.
C_5 — 3–130-$\mu\mu$fd. mica trimmer.
C_6, C_7, C_8, C_9 — 0.1-μfd. paper.
C_{10} — 100-$\mu\mu$fd. mica.
R_1 — 300 ohms, ½-watt.
R_2 — 50,000 ohms, ½-watt.
R_3 — 50,000 ohms, ½-watt.
L_1 — 1 mh.
L_2 — 5 mh.
L_3 — 200 turns No. 28 e., ¾-inch diameter, close-wound.
L_4 — Oscillator tickler (approximately 20 turns).
T — 465-kc. i.f. transformer, remodeled to tune to 1600 kc.

holding the oscillator coil also help to hold the panel to the chassis. The mixer and oscillator padding condensers, C_2 and C_4, are fastened to the sides of the chassis, under their respective tuning condensers, and C_5, the output-circuit tuning condenser, is mounted on the chassis directly behind the 6SA7. The output coil, L_3, is fastened to the chassis near its tuning condenser. Both L_2 and L_3 are wound on one-inch bakelite forms. L_1 is a winding taken from a 175-kc. i.f. transformer.

The primary winding for L_1 is put on after two layers of cellophane tape have been wound over L_1 to serve as insulation. The primary then is wound on and cemented with coil dope or Duco cement.

The converter is put into service by connecting its output to the input of a communications receiver and plugging in the line cord of the converter. While both the converter and receiver are warming up, set the receiver to 1950 kc. Then adjust the output trimmer, C_5, for maximum noise from the receiver. Next, check the converter oscillator range by setting the oscillator tuning condenser, C_3, to minimum capacity and the receiver to 1800 kc. It should then be possible to tune in the converter oscillator signal by adjusting C_4 until the signal is heard. Check the range of the oscillator by setting C_3 at maximum; if it can be tuned in at 1750 kc. on the receiver, the range is right on the nose. If the range is too great (oscillator frequency lower than 1750 kc. at maximum capacity), it indicates that fewer turns are required on L_2, and vice versa. The range is not critical, of course, since the converter is not ganged.

The receiver can now be reset to 1950 kc. and C_1 and C_3 set to the middle of their ranges. After adjusting C_2 for maximum noise (with S_1 closed), the converter is lined up for action. It will be found that the mixer tuning control is not too sharp and will need attention only after the signal has been tuned in with the main tuning control, C_3. Remember that C_3 tunes backward to the usual way: i.e., the converter is tuned to 150 kc. when it is at minimum capacity and to 200 kc. when it is at maximum capacity, the reverse of the mixer condenser action.

The coupling switch, S_1, is included so that the converter will not receive r.f. during transmission periods. It should be used to disconnect the converter from the line whenever the transmitter is being keyed.

A 6K8 converter — The circuit diagram of another converter for low frequencies is shown in Fig. 1813. It is designed for an i.f. of 1060 kc. and the output circuit must be tuned to this frequency.

All of the coils used in the grid circuit of the mixer section are universal-wound r.f. chokes. The tuning range has been extended on either side of the 150- to 200-kc. band in order to permit listening to radio stations operating on neighboring frequencies.

Remote-control relay — The circuit diagram of a relay which may be operated from a carrier-current signal for the purpose of controlling remotely an external circuit is shown in Fig. 1814. The series circuit, *LC*, should be resonant at the frequency of the distant transmitter. When the signal is applied, the potential between the cathode and the starter anode is increased. If sufficient starter-anode current flows the discharge is transferred to the anode, which causes the relay to close until the signal is removed. The relay may be used to operate a lamp or bell, turn on a receiver, or to perform other similar remote-control operations.

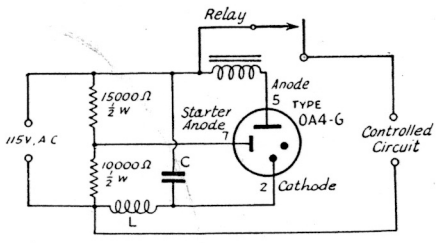

Fig. 1814 — Circuit of the c.c. remote-control relay.

CHAPTER NINETEEN

Measurements and Measuring Equipment

THE PROPER OPERATION of all but the very simplest of transmitters and receivers calls for the use of measuring instruments of various types. While the amateur station can be operated successfully with nothing more than a means for checking transmitter frequency and power input — and modulation, in the case of a 'phone transmitter — the progressive amateur is interested in instruments and measurements as an aid to better performance. The measure of the perfection of an amateur station, once a satisfactory transmitter and receiver have been provided, is the extent and utility of the auxiliary measuring and checking apparatus available.

Fundamentally, the process of measurement is that of comparing a quantity with a reference standard. Measuring equipment divides into two types: (1) fixed *standards* giving a reference point of known accuracy, used with associated equipment for making comparisons, and (2) direct-reading instruments or *meters* previously calibrated in terms of the quantity being measured.

Methods of making the measurements required in the amateur station will be discussed in this chapter, and representative types of the instruments used in making these measurements will be described.

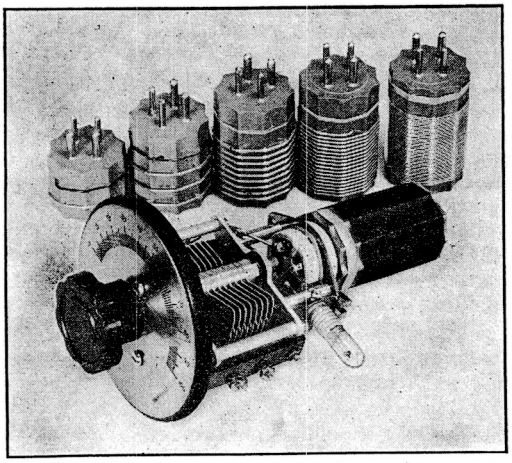

Fig. 1901 — Simple absorption frequency meter with plug-in coils covering the frequency range 1.1 to 120 Mc. with overlapping ranges. A link-coupled flashlight bulb is used as a resonance indicator. The dial plate is mounted on an insulating disc which serves as a handle. Coil forms are cut down to facilitate close coupling.

WWV SCHEDULES

All U. S. frequency calibration is based on the standard frequency transmissions from the National Bureau of Standards standard-frequency station, WWV. This station is on the air continuously, day and night, its radio frequencies of 5, 10 and 15 Mc. modulated by standard audio frequencies of 440 and 4000 cycles per second, the former, corresponding to A above middle C. In addition, there is a 0.005-second pulse every second, heard as a faint tick, which provides an accurate time interval for purposes of physical measurements.

The audio frequencies are interrupted on the hour and every five minutes thereafter for one minute to give the station announcement and to provide an interval for checking r.f. measurements. The station announcement is the call, WWV, sent in code, except on the hour and half hour when it is given by voice.

The accuracy of all frequencies is better than a part in 10,000,000. The 1-minute, 4-minute, and 5-minute intervals marked by the beginning and ending of the announcement periods are accurate to a part in 10,000,000. The beginnings of the periods when the audio frequencies are interrupted mark accurately the hour and the successive 5-minute periods.

¶ Frequency Measurement

Dependable frequency-measuring apparatus is desirable in the amateur station for several closely related purposes:

To insure that the transmitter is operated in the desired frequency band.

To set the transmitter to a desired frequency (if a self-controlled oscillator is used).

To determine the frequency of a received station, or to calibrate the receiver.

To determine the harmonic at which a frequency multiplier stage operates.

To determine the harmonic output of the transmitter.

Sec. 12.135 of the FCC Regulations states:

The licensee of an amateur station shall provide for measurement of the transmitter frequency and establish procedure for checking it regularly. The measurement of the transmitter frequency shall be made by means independent of the frequency control of the transmitter and shall be of sufficient accuracy to assure operation within the frequency band used.

Frequency (§ 2-7) is measured by counting the number of cycles or oscillations per second. Since this cannot be done directly, except at very low frequencies, in practice the measurement is made (a) by noting the response of a selective resonant device, such as a tuned cir-

cuit (absorption frequency meter, Wien bridge, etc.) or mechanical resonator (tuning fork, vibrating reed, etc.) previously calibrated in terms of frequency, or (b) comparing the unknown with a known frequency from a separate source, either matching it directly with a variable calibrated source (heterodyne frequency meter), or measuring the difference between it and a fixed source (frequency standard) the frequency of which is known with high precision, by interpolation.

Calibrated receiver — In the absence of more elaborate frequency-measuring equipment, a calibrated receiver may be used to indicate the approximate frequency of an oscillator. If the receiver is well-made and has good inherent stability, a bandspread dial calibration can be relied on to within perhaps 0.2 per cent. Some manufactured models having factory calibration may be used to even closer limits. For most accurate measurement the oscillator should be unmodulated and maximum response in the receiver indicated by a carrier-operated tuning indicator (§ 7-13), the receiver beat-oscillator being turned off.

When checking transmitting frequency the receiving antenna should be disconnected. If

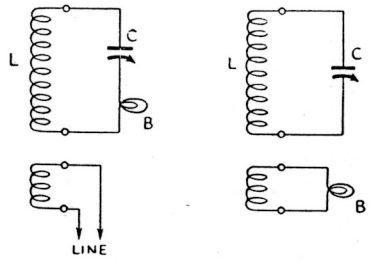

Fig. 1902 — The simple absorption frequency meter circuit at left is used chiefly in transmitter checking, with link line coupling to the circuit being checked. Circuit at right uses a flashlight-bulb indicator loosely coupled to the tuned circuit, giving a sharper resonance point.

B — 1.4-volt 50-ma. dial light.
C — 150-$\mu\mu$fd. variable (Cardwell MR-150-BS).
L — Plug-in coils wound on 1½-inch diameter forms:

Freq. Range	*Wire Size*	*Turns*	*Length*	*Link*[1]
1.1–3.5 Mc.[2]	No. 28 e.	81¾	1⅞″	17 turns
2.5–8.0 Mc.[2]	No. 24 t.	37¾	1⅝″	11 "
4.5–14 Mc.[2]	No. 20 t.	17¾	1½″	6 "
7.5–25 Mc.[2]	No. 16 t.	8¾	1¼″	4 "
22–70 Mc.	No. 16 e.	2¾	1″	2 "
40–120 Mc.	No. 16 e.	¾	—	¾ "

[1] Closewound, No. 30 d.s.c., ¼-inch from primary.
[2] Available commercially (Hammarlund SWK-4).

the signal blocks the receiver, the transmitter frequency can be checked by listening to the oscillator, with the power amplifier turned off.

Absorption frequency meters — The simplest type of frequency meter consists of a coil and condenser, tunable over the frequency range desired (Figs. 1901–1902). A frequency meter of this type, when tuned to the frequency of the transmitter and loosely coupled to the tank coil, will extract a small amount of energy from the tank. This energy can be used to light

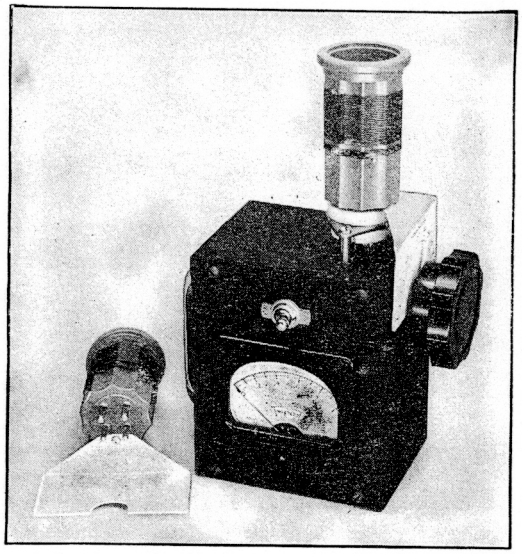

Fig. 1903 — A sensitive absorption-type frequency meter with a crystal-detector rectifier and d.c. milliammeter indicating circuit. Individual calibration charts mounted directly on each coil form make the meter direct-reading. The toggle switch places a 10-ma. shunt across the 0–1 ma. meter; this range is used for preliminary readings, to avoid burning out meter or crystal. The meter gives indications at several feet from a low-power oscillator.

a small flashlight lamp. Maximum current will flow when the frequency meter is tuned exactly to the transmitter frequency; hence, the brightness of the lamp indicates resonance. A more accurate indication may be obtained by use of a thermogalvanometer or vacuum-tube voltmeter. A crystal detector may also be used (Figs. 1903–1904). (*Bib. 1.*)

Although this type of frequency meter is not well adapted to precise measurement of frequency, it is useful for checking (1) the fundamental frequency of an oscillating circuit, (2) presence and order of amplitude of harmonics, (3) frequency of parasitic oscillations, (4) neutralization of an amplifier, (5) field strength on a qualitative basis, (6) presence of r.f. in undesired places such as power wiring, or any other application where the detection of a small amount of r.f. and measurement of its frequency may provide useful information.

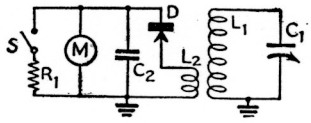

Fig. 1904—Indicating frequency-meter circuit diagram.
C_1 — 140-$\mu\mu$fd. variable (Hammarlund HFA-140-A).
C_2 — 0.001-μfd. mica.
D — Fixed crystal detector (Philmore).
L_1, L_2 — Same as in Fig. 1902.*
M — 0.1 d.c. milliammeter (Triplett Model 321).
R_1 — 3-ohm shunt; see general data on meter shunts.
S — S.p.s.t. toggle switch.
If meter reads backwards, reverse crystal connections.

* Because the impedance of individual crystal detectors varies considerably, experiment with the number of turns on L_2 is necessary for maximum current indication.

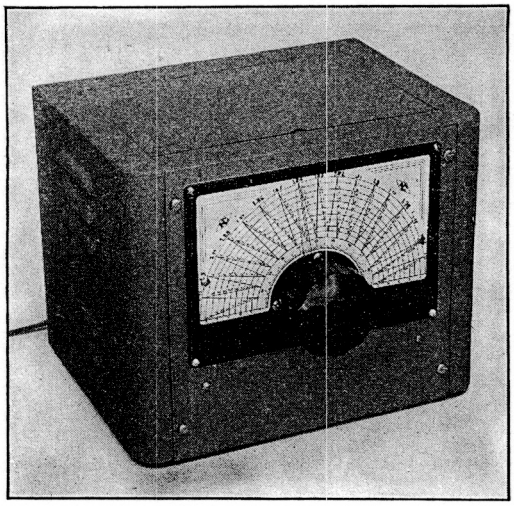

Fig. 1905 — Electron-coupled heterodyne frequency meter with harmonic amplifier and voltage regulator. The direct-reading dial is calibrated for every 10-kc. point from 1750 to 1900 kc. Axial lines passing through these points are intersected by ten semi-circular subdivision lines. Diagonal lines connecting the ends of adjacent 10-kc. lines, in conjunction with the subdivisions, enable reading the scale accurately to 1 kc. or better.

Calibration of the absorption frequency meter is most easily accomplished with a receiver of the regenerative type to which the coil in the meter can be coupled. With the detector oscillating weakly, the frequency meter should be brought near the detector coil and tuned over its range until a setting is found which causes the detector to stop oscillating. The coupling between meter and receiver should then be loosened until the stoppage of oscillation occurs at only one spot on the meter tuning dial. The meter is then tuned to the frequency at which the receiver is set. If the receiver is set on several stations of known frequency, a number of points for a calibration curve can be obtained for each coil.

The same method may be used with a superheterodyne receiver, but it must be remembered that the oscillator frequency differs from the signal frequency by the intermediate frequency. For instance, if the receiver dial reads 6500 kc. and the receiver i.f. is 456, the oscillator frequency will be 6956 kc., which is the frequency which should be marked on the meter calibration scale. It is necessary to know whether the oscillator is on the high or low side of the incoming signal; in most receivers it is on the high side throughout, but in some it is shifted to the low side on the high-frequency ranges.

If the oscillator coils in the receiver are not accessible, the frequency meter may be capacity coupled through a few turns of insulated wire wrapped around the frequency-meter coil, one end of the wire being placed near the stator plates of the oscillator condenser.

For transmitter frequency checking a flashlight lamp or other indicator is not entirely necessary, since resonance will be indicated by a change in the plate current of the stage being checked as the meter is tuned through resonance. However, for locating parasitic oscillations, determining amplitude of harmonics, checking neutralization, locating stray r.f. fields, etc., a sensitive indicator is indispensable.

The inherent errors in the absorption-type frequency meter ordinarily limit its useful accuracy to about 1 per cent.

Lecher wires — At very-high and ultra-high frequencies it is possible to determine frequency by actually measuring the length of the waves generated. The measurement is made by observing standing waves on a two-wire transmission line or Lecher-wire system. Such a line shows pronounced resonance effects, and it is possible to determine quite accurately the current loops (points of maximum current). The distance between two consecutive current loops is equal to one-half wavelength. Thus the wavelength can be read directly in meters (inches ÷ 39.37 if a yardstick is used), or in centimeters for the very short wavelengths. Further details on the practical application of this system are given in Chapter Sixteen. (*Bib. 2.*)

Heterodyne frequency meters — For more accurate measurement of transmitter frequency, a heterodyne frequency meter is used. This is a small, completely shielded oscillator with a precise frequency calibration covering the lowest frequency band in use. It must be so designed and constructed that it can be accurately calibrated and will retain its calibration over long periods of time.

The signal from this oscillator (or a harmonic thereof) is fed into a receiver or simple detector together with the signal to be measured, and the two frequencies are heterodyned. When the frequency-meter oscillator is tuned to zero beat with the signal, its frequency or the harmonic multiple is the same as the unknown frequency, and the latter therefore can be read directly from the frequency-meter dial.

The oscillator used in the frequency meter must be very stable. Mechanical considerations are most important in its construction. No matter how good the instrument may be electrically, its accuracy cannot be depended upon if it is flimsily built. Inherent frequency stability can be improved by avoiding the use of phenolic compounds and thermoplastics (bakelite, polystyrene, etc.) in the oscillator circuit, and employing only high-grade ceramics for insulation. Plug-in coils or switches ordinarily are not acceptable; instead, a solidly built and firmly mounted tuned circuit should be permanently installed and the oscillator panel and chassis reinforced for rigidity.

To obtain high accuracy, the frequency meter must have a dial which can be read precisely to at least one part in 500; ordinary dials such as are used for transmitters and inexpensive receivers are not capable of such precision without the addition of vernier scales. Select a dial which has fine lines for division marks, and which preferably has an indicator close to the

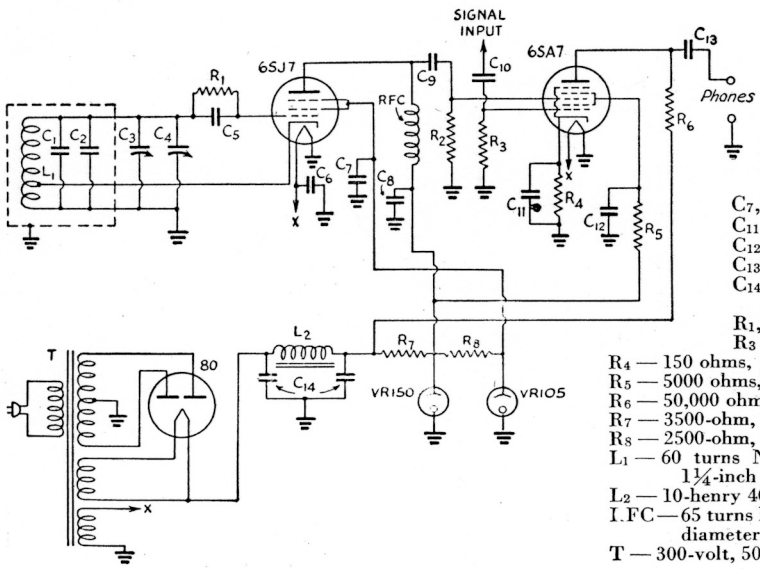

Fig. 1906 — Circuit diagram of the electron-coupled heterodyne frequency meter.
C_1 — 350-$\mu\mu$fd. zero-drift.
C_2 — 40-$\mu\mu$fd. negative temp.
C_3 — 100-$\mu\mu$fd. midget.
C_4 — 50-$\mu\mu$fd. trimmer.
C_5 — 100-$\mu\mu$fd. silver-mica.
C_6, C_8 — 0.005-μfd. mica.
C_7, C_9, C_{10} — 0.002-μfd. mica.
C_{11} — 25-μfd. 25-volt electrolytic.
C_{12} — 0.01-μfd. 400-volt paper.
C_{13} — 0.5-μfd. 400-volt paper.
C_{14} — Dual 8-μfd. 450-volt electrolytic.
R_1, R_2 — 1 megohm, ½-watt.
R_3 — 200,000 ohms, ½-watt.
R_4 — 150 ohms, ½-watt.
R_5 — 5000 ohms, 1-watt.
R_6 — 50,000 ohms, 2-watt.
R_7 — 3500-ohm, 10-watt wire-wound.
R_8 — 2500-ohm, 5-watt wire-wound.
L_1 — 60 turns No. 24 d.c.c., close-wound on 1¼-inch diameter, tapped at 12 turns.
L_2 — 10-henry 40-ma. filter choke.
I.FC — 65 turns No. 28 e. close-wound, 9/16-inch diameter.
T — 300-volt, 50-ma. power transformer.

dial scale so that the readings will not appear different because of parallax when the dial is viewed from different angles.

A stable oscillator circuit suitable for use in a heterodyne frequency meter is the electron-coupled circuit (§ 4-2). The oscillation frequency is practically independent of moderate variations in supply voltages, provided the plate and screen voltages are properly proportioned, and it is possible to take output from the plate with but negligible effect on the frequency of the oscillator. A third feature is that strong harmonics are generated in the plate circuit, so that the meter is useful over a number of frequency bands. A typical electron-coupled frequency meter is shown in Figs. 1905–1907.

When the frequency meter is first turned on some little time is required for the tube to reach its final operating temperature; during this period the frequency of oscillation will drift slightly. Although the drift will not amount to more than two or three kilocycles on the 3500-kc. band and proportionate amounts on the other bands, it is desirable to allow the frequency meter to "warm up" for about a half hour before calibrating or before making measurements in which utmost accuracy is desired. Better still, it may be left on permanently. The power consumption is negligible, and the long-time stability will be vastly improved.

Although some frequency drift is unavoidable, it can be minimized by the use of voltage-regulator tubes in the power supply and low-drift silvered-mica or zero temperature-coefficient fixed condensers in the tuned circuit. A small negative temperature-coefficient capacity may be included to compensate for residual drift.

Calibration of the frequency meter is readily accomplished if a low-frequency standard (discussed later in this chapter) is available, the required calibration points being supplied by harmonics from the standard. The frequency meter is tuned to zero beat with these harmonics, using either a built-in detector or the station receiver to combine the two signals to provide an audible beat. When a sufficient number of points have been established they may be marked on graph paper, and a calibration curve drawn. For maximum convenience, a direct-reading dial scale can be constructed.

If no frequency standard is available, calibration points may be obtained from other sources of known frequency, such as the transmitter crystal oscillator, harmonics of local broadcasting stations, etc. As many such points as possible should be secured, so that individual inaccuracies will average out.

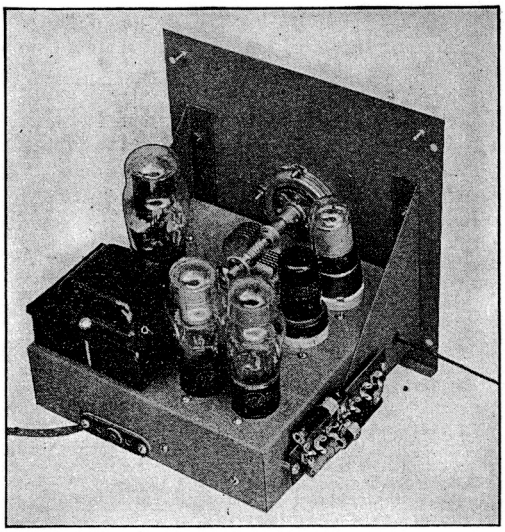

Fig. 1907 — Rear view of the electron-coupled heterodyne frequency meter. The 7 × 7 × 2-inch chassis is supported by two brackets for rigidity. It is raised sufficiently to accommodate the height of the coil shield underneath; this also enables mounting the tuning condenser directly on the chassis. The voltage-divider resistors are mounted outside to keep heat from the coil.

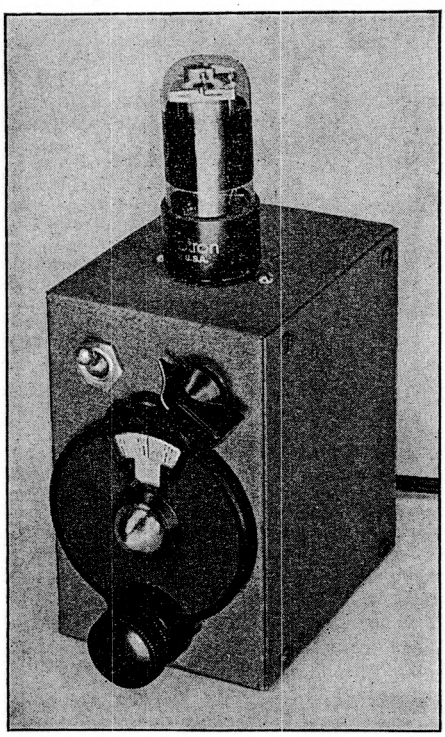

Fig. 1908 — A 50-, 100- and 1000-kc. electron-coupled frequency standard, using a dual-purpose 117L7GT tube which serves as both rectifier and oscillator. It is built up complete with transformerless power supply in a 3 × 4 × 5-inch metal box. The controls are the main tuning dial, power on-off switch, and frequency selector switch.

In use, the signal from the frequency meter may be fed into the receiver by connecting a wire from the plate of the oscillator through a very small capacity to the input of the receiver. The signal to be measured is then tuned in in the usual way and the frequency meter adjusted to zero beat.

For convenience in checking the frequency of the transmitter or other local oscillators which generate sufficiently strong signals, it is desirable to incorporate a detector in the frequency meter which will combine the signals and deliver the audio beat-note output to headphones or to a visual zero-beat indicator. A frequency-converter tube such as the 6L7 or 6SA7 is especially suited for this purpose.

With a stable oscillator, a precision dial and frequent and careful calibration, an over-all accuracy of 0.05 to 0.1 per cent may be expected of the heterodyne frequency meter. The principal limiting factors are the precision with which the calibrated dial can be read and the "reset" stability of the tuned circuit.

Frequency standards — To make more precise frequency measurements, particularly of amateur-band limits, a secondary frequency standard is required. This is a highly stable low-frequency oscillator, usually operated at 50 or 100 kc., the harmonics of which are used

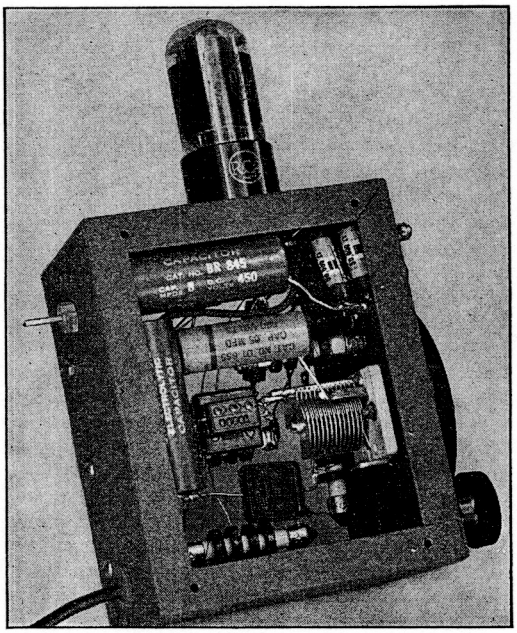

Fig. 1910 — Inside the e.c. frequency standard. Careful planning is necessary to get all parts in without crowding the inductances. Fine wire is used for all r.f. connections, to minimize vibration effects. The polystyrene bushing on the left side is the output connection.

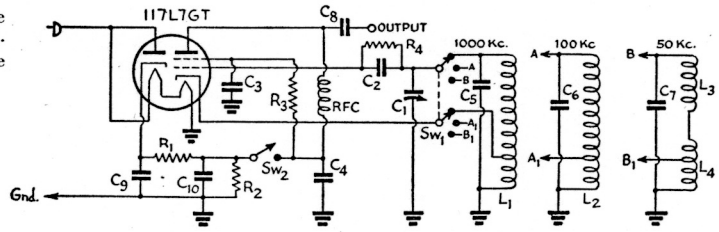

Fig. 1909 — Wiring diagram of the 50-, 100- and 1000-kc. standard.

C_1 — 100-$\mu\mu$fd. midget variable (Hammarlund HF-100).
C_2 — 250-$\mu\mu$fd. mica.
C_3, C_4 — 0.02-μfd. 400-volt paper.
C_5 — 500-$\mu\mu$fd. mica.
C_6 — 0.001-μfd. mica.
C_7 — 0.002-μfd. mica.
C_8 — 50-$\mu\mu$fd. mica.
C_9, C_{10} — 8-μfd. 450-volt electrolytic.
R_1, R_2 — 50,000 ohms, 1-watt.
R_3, R_4 — 0.1 megohm, 1-watt.
RFC — 2.5-mh. r.f. choke.
S_1 — 3-position 2-circuit rotary switch (Mallory 3223J).
S_2 — S.p.s.t. toggle switch.
L_1 — 100 turns No. 34 d.c.c. close-wound on 9/16-inch form. Cathode tap at 30th turn from ground.
L_2 — 2.5-mh. r.f. choke. Cathode tap is between first and second pies from ground.
L_3 — 2.5-mh. r.f. choke, at right angles to L_4.
L_1 — 2.5-mh. r.f. choke. Cathode tap between second and third pies from ground.

NOTE — Because of manufacturing tolerances in r.f. chokes and condensers, additional capacity may be required on the 50- and 100-kc. ranges. If C_1 does not tune to desired frequency, add 100 $\mu\mu$fd. to C_6 or C_7 as required. For additional output, decrease R_1 to 25,000 ohms. Single-wire power cord eliminates danger from shock with chassis connected to one side of line; plug must be correctly inserted or tube will not light. A ground connection is essential.

to provide reference points every 50 or 100 kc. throughout the spectrum. Since all amateur band edges fall at multiples of these frequencies, it is possible to establish band limits with extreme accuracy. A 1000-kc. frequency is often added to facilitate preliminary identification of frequency ranges, especially on v.h.f.

An electron-coupled oscillator built according to the principles previously outlined for frequency meters, with a tuned circuit for 50 or 100 kc., will serve as a simple and inexpensive standard. Such a unit is shown in Figs. 1908–1910. (*Bib. 3.*) A standard of this type is inherently more accurate than a heterodyne frequency meter because (a) the lower-frequency oscillator has better inherent stability and (b) the frequency setting once made is not thereafter changed, eliminating the reset and calibration errors. Even better long-time stability can be obtained from a crystal-controlled oscillator of the type shown in Figs. 1911–1913.

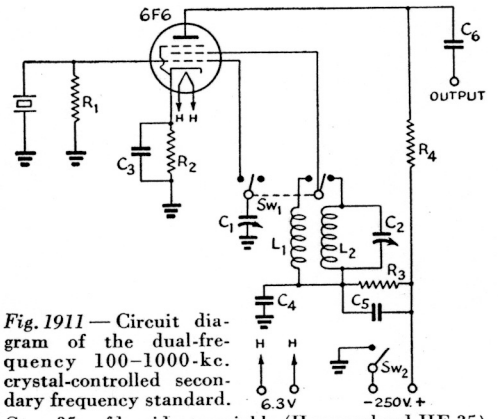

Fig. 1911 — Circuit diagram of the dual-frequency 100–1000-kc. crystal-controlled secondary frequency standard.

C_1 — 35-$\mu\mu$fd. midget variable (Hammarlund HF-35).
C_2 — 100-$\mu\mu$fd. mica trimmer (Hammarlund CTS-85).
C_3, C_4, C_5 — 0.1-μfd. 400-volt paper.
C_6 — 0.001-μfd. midget mica.
R_1 — 5 megohms, ½-watt.
R_2 — 500 ohms, ½-watt.
R_3 — 25,000 ohms, 1-watt.
R_4 — 0.25 megohm, ½-watt.
L_1 — 8-mh. r.f. choke (Meissner 1920-78).
L_2 — 2.5-mh. r.f. choke (all but one pie removed).
S_1 — D.p.d.t. toggle switch.
S_2 — S.p.s.t. toggle switch.
Crystal — Bliley SMC-100.

For highest accuracy in frequency measurement and calibration, the most suitable instrument is a precision crystal-controlled secondary standard, provided with a multivibrator (§3-7) for frequency division (Figs. 1914–1915) to mark 10-kc. intervals throughout the communications spectrum. The frequency of a signal can then be checked by noting its location with respect to two adjacent 10-kc. points on the dial of a calibrated receiver or heterodyne frequency meter and estimating the exact frequency by interpolation.

Although ordinary amateur practice does not require greater accuracy than is possible with this method, except at band edges, even more precise measurements can be made by the use of an interpolation oscillator. This is a calibrated audio oscillator used in the same manner as a heterodyne frequency meter; it is set at zero beat with the beat-note resulting from the combination of the unknown signal frequency with the nearest 10-kc. multivibrator harmonic. For example, if the "unknown" frequency is 3514 kc., it will produce a 4000-cycle beat with the 3510-kc. harmonic. When the audio oscillator is set at 4000 cycles it will zero-beat with this beat-note. Thus the frequency can be read direct from the dial of the a.f. oscillator to within a few cycles.

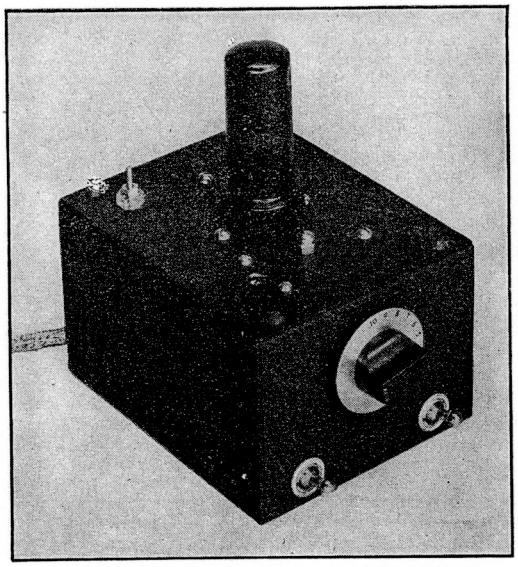

Fig. 1912 — A 100–1000-kc. crystal-controlled frequency standard. The special X-cut crystal oscillates at either of two frequencies, determined by its thickness (1000 kc.) and length (100 kc.). Either is selected by a switch which connects in a tuned circuit resonant at the desired frequency. A parallel trimmer across the crystal permits adjusting the frequency to precisely 100 kc. (provided natural crystal frequency is on the high side). Output is taken through insulated bushing at upper left.

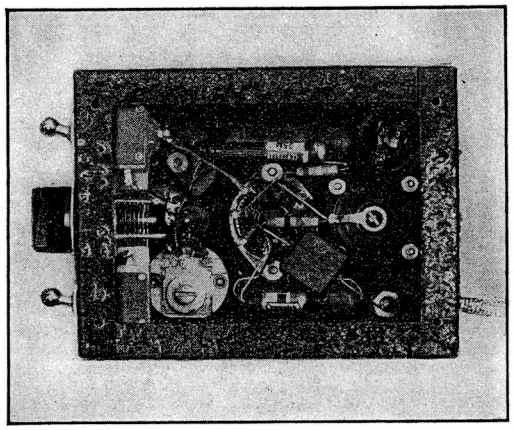

Fig. 1913 — Interior of the 100–1000-kc. standard. The crystal is mounted at right center, beside the socket. (If crystal does not oscillate on 1000 kc. when mounted in horizontal position, try other positions). Trimmer for 1000-kc. plate circuit is at lower left, near the crystal trimmer; the 8-mh. choke for 100-kc. is at upper left.

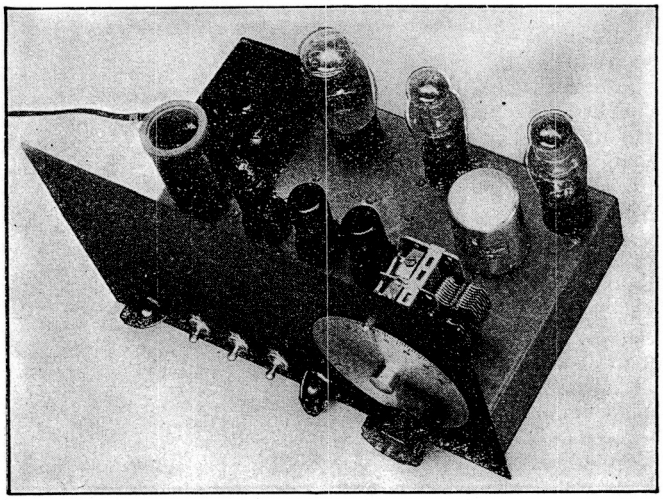

Fig. 1914 — A secondary frequency standard, incorporating a 100-kc. low-drift crystal oscillator, a 10-kc. multivibrator, and a harmonic amplifier-modulator. The vernier dial is used for precise setting of crystal frequency. Controls along the bottom are, left to right: output tuning, C_{14}; on-off switch, S_1; "B" switch, S_2; multivibrator switch, S_3, and multivibrator control, R_8. Power transformer, rectifier and regulator tubes are along the rear edge of the 7 × 12-inch chassis. The crystal oscillator is at the right, multivibrator tube in the center, and output circuit at the left. The output circuit is tuned to the band in use, with output taken either through C_{17} or a link winding. Output coupling is adjusted to give desired signal strength in the receiver. The crystal frequency can be adjusted to precisely 100 kc. by the vernier dial controlling C_1. Switching the multivibrator section on or off will cause a frequency change of less than 1 part in a million.

Before adjusting a frequency standard, at least a 15-minute warm-up period should be allowed. For initial adjustment, couple its output into a broadcast receiver and adjust the oscillator to zero beat with a b.c. station operating on a multiple of 100 kc. If the oscillator is self-excited a second station 100-kc. away should be checked, to make sure it is working on 50 or 100 kc. rather than another frequency which gives an odd harmonic. Since broadcasting stations are required to stay within 20 cycles of assigned frequency, the maximum error will be less than 30 parts in one million.

For greatest accuracy the standard should be calibrated on the WWV transmissions (page 392), which are accurate to better than a part in 10 million. These transmissions may be tuned in on a receiver operating on 5 Mc. (the receiver beat oscillator being turned off) and the standard adjusted until its harmonic is exactly at zero beat with WWV. The calibration should be rechecked whenever precise measurements are to be made.

In adjusting the multivibrator, two adjacent 100-kc. points are first noted on the dial of a calibrated receiver. The multivibrator is

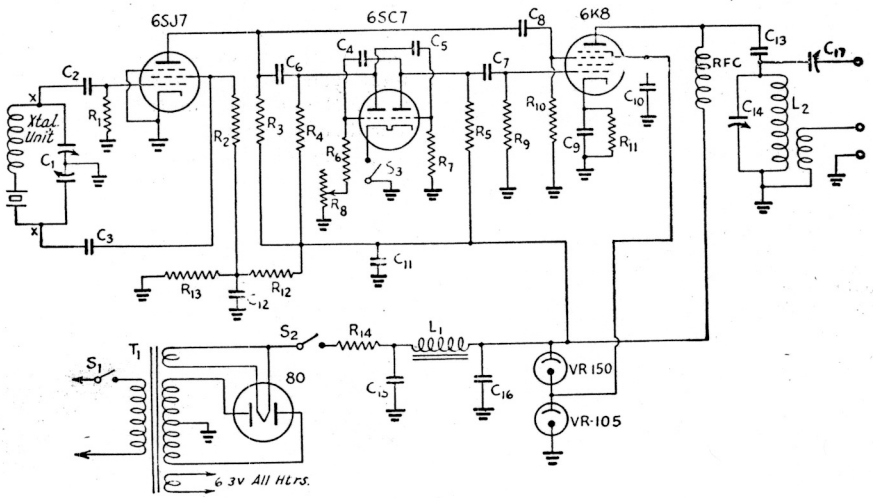

Fig. 1915 — Circuit diagram of the precision low-drift crystal-controlled 100-kc. secondary frequency standard.

C_1 — Dual 365-μμfd. variable.
C_2, C_3 — 0.01-μfd., 400-volt paper.
C_4, C_5 — 0.001-μfd. midget mica.
C_6, C_7 — 10-μμfd. midget mica.
C_8 — 50-μμfd. midget mica.
C_9, C_{10}, C_{11}, C_{12} — 0.1-μfd. 400-volt.
C_{13} — 0.002-μfd. midget mica.
C_{14} — 140-μμfd. variable.
C_{15}, C_{16} — 8-μfd. 450-volt electrolytic.
C_{17} — 3–30-μfd. trimmer.
R_1 — 1 megohm, ½-watt.
R_2, R_3 — 0.5 megohm, 1-watt.
R_4, R_5 — 50,000 ohms, 1-watt.
R_6, R_7 — 20,000 ohms, ½-watt.
R_8 — 15,000-ohm potentiometer.
R_9 — 0.3 megohm, ½-watt.
R_{10} — 0.1 megohm, ½-watt.
R_{11} — 800 ohms, ½-watt.
R_{12} — 25,000 ohms, 1-watt.
R_{13} — 50,000 ohms, 1-watt.
R_{14} — 1500 ohms, 10-watt.
RFC — 2.5 mh. r.f. choke.
S_1, S_2, S_3 — S.p.s.t. toggle.
T_1 — Power transformer, 250 volts, 40 ma.
L_1 — 7-henry, 40-ma. filter choke.
L_2 — Plug-in coil for band in use.

The crystal is a Bliley SOC-100 (supplied complete with oscillator coil in same mounting). For checking 1000-kc. points, a 150 microhenry coil (75 turns of No. 30 d.c.c. on a 1½-inch form) may be substituted for the crystal unit, connected between points X-X in the diagram. With C_1 near maximum capacity, the oscillator circuit will tune to 1000 kc.

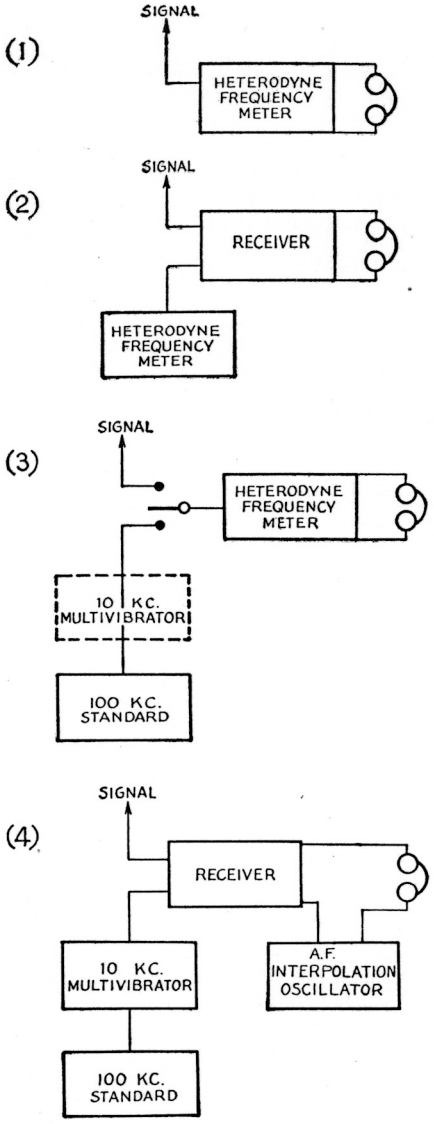

Fig. 1916 — Frequency measurement methods in common use. (1) A frequency meter (with built-in detector) used alone is the simplest arrangement for checking the frequency of local oscillators. (2) With a receiver, incoming received signals can be measured as well. (3) A heterodyne frequency meter can also be used as a linear interpolation oscillator in conjunction with a 100-kc. standard, with or without a 10-kc. multivibrator. The standard provides accurate check points on the frequency meter scale. Alternatively, a receiver (if adequately calibrated) may be substituted for the frequency meter. (4) For greatest precision, method is used with an interpolation audio oscillator having a linear scale. With careful design and construction, high precision can be attained with methods (3) and (4). Using (3), the accuracy can be 0.01 per cent (100 parts in a million). Method (4) is accurate to 10 parts in a million with ordinary equipment; when precision laboratory apparatus is used it is reliable to better than 1 part in a million.

Interpolation — When measuring exact frequencies with the aid of a frequency standard and multivibrator providing equi-spaced harmonic points, it is necessary to determine the exact location of the unknown frequency by interpolation between adjacent standard harmonics. This can be done (a) by use of a calibrated receiver or heterodyne frequency meter with a scale which is linear with frequency, or (b) by comparison of the audio beat frequency with a calibrated audio oscillator.

In method (a), the points at which the unknown frequency and the nearest lower and higher harmonics appear on the dial of the receiver or frequency meter are noted, as shown in Fig. 1917. Knowing the exact frequencies of the harmonic points, f_1 and f_2, the unknown frequency, f_x, can be determined as follows:

$$f_x = f_1 + \frac{S_x - S_1}{S_2 - S_1}(f_2 - f_1)$$

where S_1 is the dial setting for f_1, S_2 for f_2 and S_x for f_x.

Method (b) consists of beating the standard and unknown frequencies in a detector and measuring the resulting audio frequency by zero-beating with a calibrated audio oscillator having a linear frequency range covering half the difference between adjacent harmonics

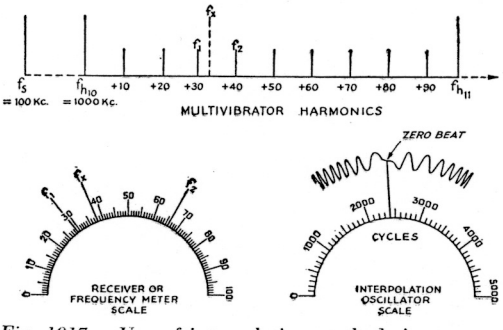

Fig. 1917 — Use of interpolation methods in measuring frequencies between standard harmonics. At the top is shown the relative location of the frequency-standard fundamental and harmonics in the spectrum, together with the multivibrator harmonics, as related to the unknown frequency under measurement (f_x). At the left is shown a small segment of this spectrum as it appears on the dial of a calibrated receiver or heterodyne frequency meter, and at right the appearance of the audio oscillator dial when using the comparison audio beat-note method.

then turned on, and its frequency control (R_8 in Fig. 1915) set at half-scale. The number of separate audio beats *between* the two marked 100-kc. points is then counted. If it is a number other than nine (indicating 10-kc. intervals), readjust R_8 until nine beats are observed. Mark this point. Note also the points on the R_8 scale where 8 and 10 beats occur, indicating approximately 11- and 9-kc. separation. The odd frequencies are occasionally useful in checking frequencies very close to the 10-kc. harmonics where the low beat-frequency makes it difficult to secure zero-beat, particularly when an interpolation oscillator is used.

The 100-kc. points usually can be identified because they are louder than the 10-kc. harmonics. This identification can be facilitated by applying audio modulation to the 100-kc. signal only, causing the modulated points to stand out because of the distinctive tone.

(0–5000 cycles with a 10-kc. multivibrator), as shown in Fig. 1917. The measured frequency is then equal to the reading of the audio oscillator, added to or subtracted from the nearest standard harmonic. To determine whether to add or subtract this audio difference, it is necessary that the frequency be known within 5 kc. from the receiver (or auxiliary heterodyne frequency meter) calibration.

In addition to the beat note resulting from the nearest adjacent harmonic, f_1, there will also be another higher beat from f_2. However, by tuning the receiver midway between f_1 and f_x, its adjacent-channel selectivity will discriminate against f_2 and reduce the higher beat note to a negligible level.

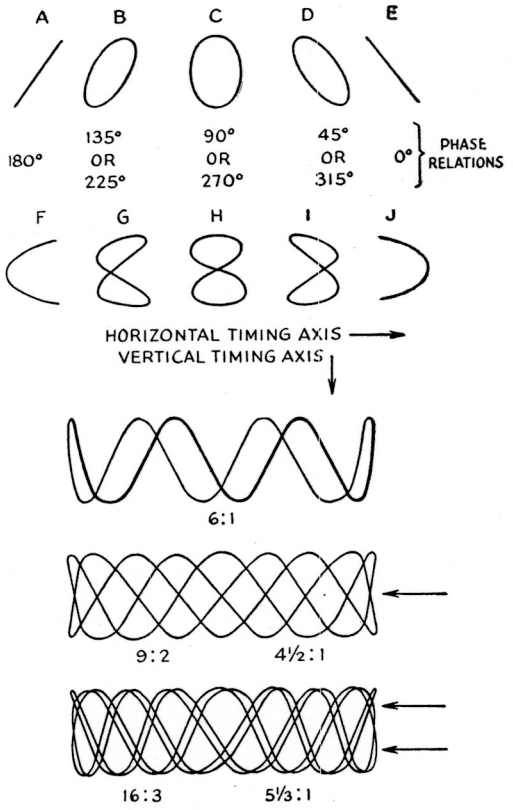

Fig. 1918 — Lissajou's figures as used in measuring audio frequencies by comparison with a known source on a cathode-ray oscilloscope. Figures A through E illustrate the pattern produced by different phase relationships when the two voltages have a 1:1 frequency ratio. Figures F through J show the same phase relationships with a 2:1 frequency ratio, the higher frequency being applied to the vertical plates. The next figure shows a ratio of 6:1, determined by counting the peaks of the waves in the horizontal plane (in this instance the higher frequency is applied to the horizontal plates). Complex ratios are identified by one or more cross-overs, as indicated by the arrows opposite the 9:2 and 16:3 figures. In principle, frequency ratios are determined by counting both horizontal and vertical peaks (number of cross-overs plus 1). Care must be taken not to confuse the back lines (return trace shown by light line in 6:1 figure) in counting cross-overs. This can be done by counting only those peaks which travel in the same direction across the screen when the frequency ratio is adjusted so that the pattern rotates slowly.

The interpolation audio oscillator should have a scale which reads linearly with frequency (as opposed to the logarithmic scale commonly found in laboratory oscillators). A beat-frequency oscillator with a straight-line-capacity tuning condenser in series with the correct value of fixed capacity can be made to have such a scale. A resistance-capacity oscillator also can be made with a nearly linear scale.

A suitable detector is a pentagrid converter (§ 7-9) with some form of zero-beat indicator in the plate circuit. The interpolation oscillator is connected to the oscillator grid and the audio beat note from the receiver to the signal grid.

Zero-beat indicators — Use of the heterodyne method of frequency comparison requires a means for determining when the known and unknown frequencies are synchronized; i.e., when they are at zero beat. The point at which zero beat occurs can be determined approximately by listening to the output of the receiver or detector in the headphones or loudspeaker. For greatest accuracy, however, some form of auxiliary visual zero-beat indicator is desirable. This may be a rectifier-type a.f. voltmeter with a copper-oxide or diode rectifier (§ 2-3), a neon-tube "flasher," or an electron-ray tube (§ 7-13) with its triode grid connected to the receiver output. Headphones still will be required for preliminary adjustments, since the visual indicator usually responds only to frequencies of less than about 25 cycles.

Audio-frequency measurement — The measurement of unknown audio frequencies also can be accomplished by either direct or comparison methods. Laboratory measurements are commonly made with a calibrated a.c. (Wien) bridge (§ 2–11).

Where a calibrated audio oscillator is available, measurements may be made by comparison as previously described in this chapter. If no electrical frequency standard is available, the audio frequency can be converted into sound through a power amplifier and loudspeaker and measured by aural comparison with a properly tuned piano, remembering that middle C is 256 cycles and each octave above or below doubles or halves the frequency. Intermediate points can be obtained by multiplying each successive half-note above C in any octave by 1.05946 (e.g., if C is 1, C# equals 1.05946, D equals 1.1225, etc.).

The cathode-ray oscilloscope (§ 3-9) is extremely useful in measuring frequencies by the comparison method when a reliable standard source is available. Applying voltages from the unknown and the standard to the opposite pairs of cathode-ray tube deflecting plates results in patterns of varying form termed Lissajou's figures. By proper interpretation of these figures, as shown in Fig. 1918, frequency ratios up to 10 to 1 can be obtained conveniently. Thus, with a 1000-cycle oscillator, calibration points between 100 and 10,000 cycles are available. A 60-cycle a.c. source similarly can be used up to 600 cycles or so.

Measurement of Current, Voltage and Power

D.c. instruments — Instruments for measuring direct current (§ 2-6) are based on the d'Arsonval moving-coil principle, comprising an indicating pointer moving across a calibrated scale, actuated by the flow of current through a coil located in a constant magnetic field.

Ammeters and voltmeters are basically identical instruments, the difference being in the method of connection. An ammeter is connected in series with the circuit and measures the current flow. A voltmeter is a milliammeter (ammeter reading one-thousandth of an ampere) which measures the current through a high resistance connected across the source to be measured; its calibration is in terms of the voltage drop in the resistance or *multiplier*.

The ranges of both voltmeters and ammeters can be extended by the use of external resistors,

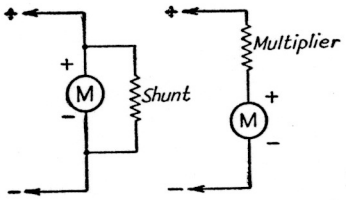

Fig. 1919 — How voltmeter multipliers and milliammeter shunts are connected to extend the range of a d.c. meter.

connected in series with the instrument in the case of a voltmeter or in shunt in the case of an ammeter. Fig. 1919 shows at the left the manner in which a shunt is connected to extend the range of an ammeter and at the right the connection of a voltmeter multiplier.

To calculate the value of a shunt or multiplier it is necessary to know the resistance of the meter. If it is desired to extend the range of a voltmeter, the value of resistance which must be added in series is given by the formula:

$$R = R_m\,(n - 1)$$

where R is the multiplier resistance, R_m the resistance of the voltmeter, and n the scale multiplication factor. For example, if the range of a 10-volt meter is to be extended to 1000 volts, n is equal to 1000/10 or 100.

If a milliammeter is to be used as a voltmeter, the value of series resistance can be found by Ohm's law (§ 2-6):

$$R = \frac{1000\,E}{I}$$

where E is the desired full-scale voltage and I the full-scale reading of the instrument in ma.

To increase the current range of a milliammeter, the resistance of the shunt is

$$R = \frac{R_m}{n - 1}$$

where R_m is the meter resistance as before.

Homemade milliammeter shunts can be constructed from any of the various special kinds of resistance wire, or from ordinary copper magnet wire if no resistance wire is available. The Copper Wire Table on page 427 gives the resistance per 1000 feet for various sizes of copper wire. After computing the resistance required, determine the smallest wire size which will carry the full-scale current (at 250 circular mils per ampere). Measure off enough wire (pulled tight but not stretched) to provide the required resistance. Accuracy can be checked by causing a current to flow through the meter which makes it read full-scale without the shunt; connecting the shunt should then give the correct reading based on the new full-scale range.

Copper has an appreciable temperature coefficient of resistivity (actually, 0.00393/° C.), and therefore a change in temperature of only 5° F. will change the effective resistance of a copper-wire shunt about 1 per cent. The heating effect of the current through the shunt must be taken into account if high accuracy is desired, as must temperature rise in enclosed cabinets and even room-temperature variations.

The following table shows the minimum wire sizes which should be used for shunts required to carry typical values of current with reasonable temperature rise, together with the resistance per foot at temperatures of 20° C. (68° F.) and 25° C. (77° F.).

Current	*Wire Size*	*Resistance in Ohms Per Foot* 20° C.	25° C.
60 ma.	No. 38	0.6596	0.6726
100 "	" 36	0.4148	0.4295
150 "	" 34	0.2609	0.2660
250 "	" 32	0.1641	0.1673
400 "	" 30	0.1032	0.1052
600 "	" 28	0.06490	0.06617
1000 "	" 26	0.04082	0.04162

Precision wire-wound resistors used as voltmeter multipliers cannot readily be made by the amateur because of the much higher re-

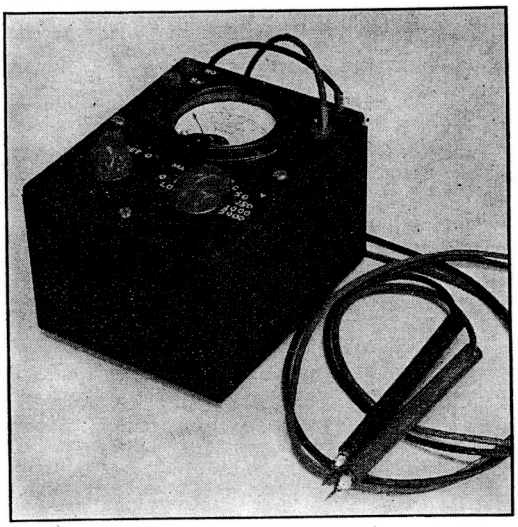

Fig. 1920 — An inexpensive multi-range volt-ohm-milliammeter housed in a standard 3 × 4 × 5-inch metal box. A bakelite panel is used. Ranges are marked with number dies, the impressions being filled with white ink.

sistance required (as high as several megohms). As an economical substitute, standard metallized fixed resistors may be used. Such resistors are supplied in tolerances of 5, 10 or 15 per cent ± the marked values. By obtaining matched pairs from the dealer's stock, one of which is, for example, 4 per cent low while the other is 4 per cent high, and using the pairs in parallel or series to obtain the required value of resistance, good accuracy can be obtained at small cost. High-voltage multipliers are preferably made up of several resistors in series; this not only raises the breakdown voltage but tends to average out errors in the individual resistors due to manufacturing tolerances.

A portable combination milliammeter-voltmeter-ohmmeter (often called a V-O-M, or multimeter) having several ranges is extremely useful for experimental purposes and for trouble-shooting in receivers and transmitters. As a voltmeter such an instrument should have high resistance, so that very little current will be drawn in making voltage measurements. A low-resistance voltmeter will give inaccurate readings when connected across a high-resistance circuit. A resistance of 1000 ohms per volt is satisfactory for most uses; a 0-1 milliammeter or 0-500 microammeter (0-0.5 ma.) is the basis of most multi-range meters of this type. Microammeters having a sensitivity of 0-50 μa., giving a voltmeter resistance of 20,000 ohms per volt, are found in units available at reasonable cost. Multipliers for the various ranges are selected by switches.

The various current ranges on a multi-range instrument are obtained by using a number of shunts individually switched in parallel with the meter. Particular care must be taken to minimize contact resistance in the switch.

A variety of mechanical and electrical arrangements may be used in a meter of this type. One simple and inexpensive version is shown in Figs. 1920–21. Using a 0–1 ma. meter, this unit provides five voltage ranges at 1000 ohms per volt: 0–10, 50, 250, 1000 and 5000 volts. The current ranges are 0–1, 10 and 100 ma. There are two ohmmeter ranges: a series range of 0–250,000 ohms and a shunt range of 0–500 ohms. The high-ohms scale is multiplied by 10 if the positive terminal of a 45-volt "B" battery is connected to the "Hi-Ohm" terminal as indicated (the unknown resistance being connected between the negative battery terminal and the ohmmeter negative).

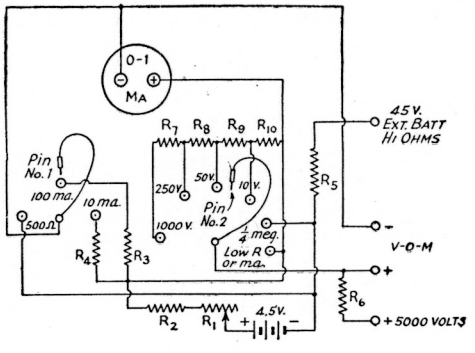

Fig. 1922 — Alternative V-O-M circuit employing pin-jack connectors. Except for the rotary switch, *SW*, all values are the same as in Fig. 1921. Voltage and high-resistance measurements are made with Pin No. 1 disconnected and Pin No. 2 in the appropriate jack. For measuring low resistances by the shunt method, Pin No. 1 is plugged into the 500-ohm jack and Pin No. 2 into the low-ohm-ma. jack. Leaving Pin No. 2 in this same position and removing Pin No. 1 to neutral, the 1-ma. range can be covered. To cover additional current ranges merely requires plugging Pin No. 1 into the 10- or 100-ma. jacks, while Pin No. 2 remains in the low-ohm-ma. jack.

The circuit, based on the use of a multi-position rotary selector switch, is given in Fig. 1921. An alternative circuit for use where such a switch is not available, employing 'phone-tip and jack connectors, is shown in Fig. 1922.

When d.c. voltage and current are known, the power in a circuit can be stated by simple application of Ohm's law: $P = EI$ (§ 2-6). Thus the voltmeter and ammeter are also the instruments used in measuring d.c. power.

A.c. instruments — D.c. meters will not function on alternating current, and it is therefore necessary either to rectify the a.c. and measure the resulting d.c. or to use special instruments that will indicate on a.c. (§ 2-8).

A.c. ammeters and voltmeters utilize the moving iron-vane principle. Since the maximum sensitivity is 15 to 25 ma. (40 to 67 ohms per volt) iron-vane voltmeters consume substantial power. Thus they are suitable for measuring filament and line voltages, but cannot be used with circuits which are unable to sustain an appreciable measuring load. Moving iron-vane meters are not accurate at frequencies above a few hundred cycles.

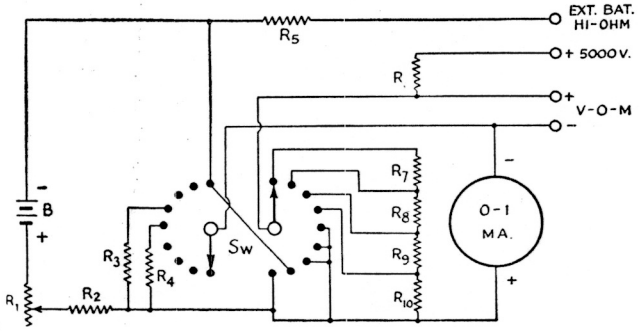

Fig. 1921 — Circuit of the low-cost V-O-M.
R_1 — 2000-ohm wire-wound variable.
R_2 — 3000 ohms, ½-watt.
R_3 — 100-ma. shunt, 0.33 ohms (see text).
R_4 — 10-ma. shunt, 3.6 ohms (see text).
R_5 — 40,000 ohms, ½-watt.
R_6 — 4 megohms, 4-watt (four 1-megohm 1-watt resistors in series).
R_7 — 0.75 megohm, 1-watt (0.5 megohm and 0.25 megohm ½-watt in series).
R_8 — 0.2 megohm, ½-watt.
R_9 — 40,000 ohms, ½-watt.
R_{10} — 10,000 ohms, ½-watt.
SW — 9-point 2-pole switch (Mallory-Yaxley 3109).
B — 4.5 volts (Burgess 5360).

For measurements where iron-vane meters are not suitable, special devices enabling the use of d.c. movements are employed. The most common of these for the power- and audio-frequency range is the full-wave copper-oxide rectifier, which converts a low-resistance 0-1 ma. d.c. milliammeter into a high-resistance 0-0.909 ma. a.c. milliammeter, making possible the construction of a.c. voltmeters having a sensitivity of 1000 ohms per volt and an accuracy of about 5 per cent. The design of multipliers for such a voltmeter must allow for the fact that the rectifier resistance varies with current. Two scales are usually provided, one for use above 50 volts and one below. The frequency error averages 0.5 per cent per 1000 cycles.

A.c. power measurements are more complex than for d.c., the simple multiplication of current and voltage being in error unless the load is purely resistive. If the current and the a.c. impedance are known, the power is I^2Z. For ordinary amateur power calculations, such as the input to a power transformer, the product of a.c. voltage and current may be considered sufficiently accurate.

R.f. instruments — The measurement of high-frequency a.c. or r.f. quantities involves special problems. Practical instruments read in terms of d.c. from a conversion device.

R.f. current usually is measured by means of a thermoammeter. This is a sensitive d.c. microammeter connected to a thermocouple associated with a heater made of a short piece of resistance wire. Thermoammeters have been made with an r.f. sensitivity of 1 ma., but the ranges used by amateurs for measuring antenna current, etc., are from 0–0.5 ampere up.

The most suitable r.f. voltmeter is a peak-reading vacuum-tube voltmeter (Fig. 1923). When properly designed, its accuracy at r.f. is limited only by the variation of input resistance with frequency. The peak diode voltmeter has little error even at 60 Mc. The same is true of the self-biased and slide-back types, if tubes having low input capacity are used. The oscilloscope also can be used as an r.f. voltmeter where the potential is several volts or more.

R.f. power measurements can be made by measuring the current through a resistor or reactance of known value. Approximate power measurements can be made by using ordinary 115-volt light bulbs as a substitution or "dummy" load, connected either singly or in series-parallel to provide the required resistance and power rating. The approximate resistance of the bulb can be computed from its wattage rating at 60 cycles. Special non-inductive resistance units enclosed in vacuum bulbs mounted on standard tube bases, with resistances of 73 and 600 ohms at power ratings up to 100 watts, are available for this purpose. For higher power the units can be connected in series-parallel (§ 4-9).

Where the substitution load method is impractical, r.f. power can be measured by multiplying the current through a thermoammeter in the circuit by the r.f. voltage across the circuit as indicated by an r.m.s. meter (or 70.7 per cent of the reading on a peak voltmeter).

Another method of measuring r.f. power is by the photometric method. In this method a calibrated light-sensitive cell (a photographer's exposure meter is suitable) is used to measure the relative brilliance of an electric light bulb as a substitution load compared with its normal brilliance on 115-volt 60-cycle supply.

Vacuum-tube voltmeters — The most generally useful instrument for the measurement of d.c., a.c. and r.f. voltages is the vacuum-tube voltmeter. Its chief advantages are (a) high input resistance (i.e., negligible power taken from the circuit under measurement), and (b) good accuracy over a wide range of frequencies extending, with some types, up into the ultrahigh-frequency region.

The vacuum-tube voltmeter operates by virtue of the change in plate current in a vacuum tube caused by a change in the voltage applied to the grid. Thus, by introducing the voltage which is to be measured into the grid circuit, the resulting plate-current change constitutes a measure of the applied voltage. In the case of a.c. the tube acts as a rectifier, and the measurement is in terms of rectified d.c.

Representative vacuum-tube voltmeter circuits are shown in Fig. 1923. The simple diode rectifier (A) can be almost any type of tube; in a triode or multi-grid type, all electrodes except the control grid are connected to cathode (or negative filament). A Type 30 or 1G4G tube with a flashlight cell for filament supply makes a convenient portable unit. Tubes with low input capacity (1N5G, 6T7G, 954, etc.) should be used for high frequencies. The frequency range is limited by the tube input capacity shunting the load resistance. The calibration will be linear above 2 or 3 volts, provided the load resistance exceeds 0.1 megohm. The meter, M, should be a sensitive microammeter (0–100 or 200 μa.); however, a 0-1 ma. meter can be used with reduced sensitivity.

The peak diode voltmeter at B, shunt-connected to eliminate the necessity for a d.c. return in the measured circuit, reads peak a.c. voltage. The input resistance is comparable to that of the simple diode for equivalent sensitivity, but the high-frequency error is less. The time constant of the RC circuit should be at least 100 for the lowest frequency to be measured ($RCF < 100$). Typical values are 0.5 megohm and 0.5 μfd. for audio frequencies and 0.1 megohm and 0.05 μfd. (mica) for r.f. and i.f.

The grid-rectification circuit shown at C may be considered equivalent to the diode rectifier of B followed by a zero-bias triode amplifier. The sensitivity is greatly increased over the ordinary diode. The input resistance is low with small inputs (0.1 to 1.0 megohm) because of grid current. The plate current is at a maximum when idling and decreases with signal. This circuit is useful chiefly because it can be used with inexpensive meters. The in-

strument may be calibrated from a known 60-cycle source; the scale is square-law for small signals, becoming linear with increasing input. The value of R is non-critical. C should have a reactance small compared with R at the operating frequency; i.e., 0.01-μfd. mica from 1 kc. up, 0.1-μfd. paper for low a.f. For d.c., C is, of course, omitted. A high-μ tube is preferable, to reduce the idling or no-signal plate current.

The self-biased plate-rectification or reflex voltmeter at D has a very high input resistance and fair sensitivity. It is normally connected directly across the circuit to be measured; if no d.c. return is available, a coupling circuit must be added, as shown by the dotted lines (C — 0.01 μfd; R — 10 megohms or more). A low-μ tube is preferable, to minimize contact potential and grid current. The cathode resistance, R_2, controls the sensitivity; the higher its resistance, the more linear and stable will be the calibration. A range switch can be provided, connecting in various values of cathode resistance from 2000 ohms to 0.5 megohm to give full-scale ranges from about 2.5 to 250 volts. The plate and cathode by-passes may be 0.001-μfd mica condensers, the cathode being shunted by a 10-μfd. electrolytic for 60-cycle calibration and low audio-frequency measurements.

The no-signal plate current present in the circuits of C and D can be balanced out by bridge or bucking circuits, typical forms of which are shown at E. An auxiliary battery (or a section of the voltage divider in an a.c. power supply) is connected back to the meter through a variable resistor, providing a controllable opposite current flow which can be made to equal exactly the residual plate current of the tube. When used with C this balancing circuit allows the meter terminals to be reversed, thereby making the meter read forward instead of backward. The resistor, R, should have a value not less than ten times the internal resistance of the meter.

At the right in E an automatic balancing circuit is shown wherein a duplicate triode (usually the second section of a twin-triode tube) takes the place of the adjustable resistor, R. Current flow through R_1 and R_2 being equal and opposite with no signal, there is no potential across the meter and consequently no current flow. When a voltage is applied to the grid of the voltmeter triode this balance is disturbed, however, and the meter registers current flow. A small zero-setting resistor, R_3, is provided to correct for any discrepancies in the tubes or resistors. The values for R_1 and R_2 depend on the plate-supply voltage available; the higher the resistances, the better the sensitivity and stability. The minimum value is several times the meter resistance.

The "slide-back" voltmeter at F is a comparison instrument in which the peak value of an a.c. or r.f. voltage is read in terms of a d.c. substitution voltage; the voltmeter tube and the milliammeter, M, merely indicate when the two voltages are equal. With the input terminals shorted and R_1 set so that V reads zero, the tube is biased nearly to cut-off by adjustment of R_2. The residual plate current becomes the reference current ($I_{ref.}$) or "false zero." When an a.c. voltage, E, is applied across the input terminals, plate rectification of the positive peaks causes the plate current to rise. By adjustment of R_1, additional bias voltage is introduced to balance out the a.c. voltage. The additional bias required to bring the plate current back to the reference value ($I_{ref.}$) is equal to the peak value of the voltage being measured. In operation, R_1 should be adjusted (after setting $I_{ref.}$) so that all of E_1 is in the circuit, to avoid burning out the milliammeter

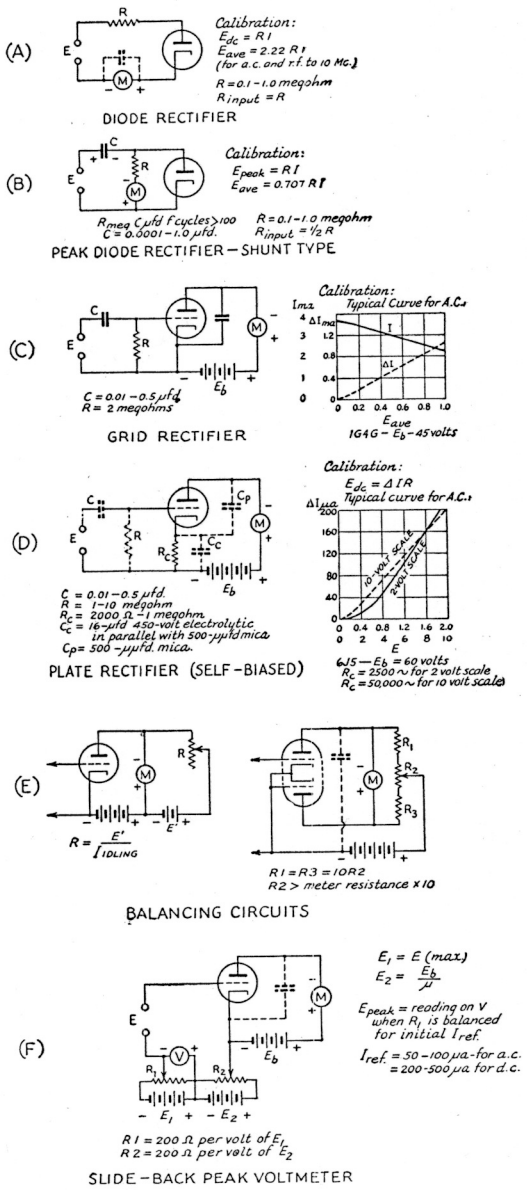

Fig. 1923—Fundamental vacuum-tube voltmeter circuits.

when the signal is applied. After the unknown voltage has been connected, the bias is reduced by R_1 until the reference current is reached. The slide-back voltmeter is capable of high accuracy and has the advantage of requiring no a.c. calibration; it is, therefore, particularly useful for a temporary set-up.

Oscilloscopes — Perhaps the most useful of all measuring devices is the cathode-ray oscilloscope (§ 3-8, 3-9). Although relatively expensive, its applications are so numerous that it can replace a number of other less satisfactory types of measuring equipment. t can be used on d.c., a.c. and r.f., and is particularly suited to a.f. and r.f. measurements because of the high input resistance and small frequency error.

The oscilloscope is, in effect, a complex voltmeter capable of measuring any two voltages simultaneously by the deflection of a weightless electron-beam pointer. Moreover, because this pointer projects its indication on a retentive luminous screen, the measurements include the additional factor of time. It is possible, therefore, to see the actual form of one or more repetitive cycles of an a.c. voltage by means of the oscilloscope, and to measure thereby not only the amplitude of the voltage but also its frequency and waveform (§ 3-9).

A simple cathode-ray oscilloscope is shown in Figs. 1924–25. It employs a type 902, an inexpensive 2-inch cathode-ray tube, which is mounted, together with the associated rectifier tube and other components, in a cabinet made of a standard 3 × 5 × 10-inch steel chassis with bottom plate. The shielding provided by this box is highly desirable for prevention of stray-field interference in the patterns obtained.

In building the unit, the cathode-ray tube must be placed so that the alternating magnetic field from the transformer has no effect on the electron beam. The transformer should be mounted directly behind the base of the tube, with the axes of the transformer windings and the tube on a common line.

If trouble is experienced in getting a pattern from a high-power transmitter because of r.f. voltage on the 115-volt supply line, two blocking condensers (0.01 or 0.1 μfd.) may be connected in series across the primary of the power transformer in the oscilloscope, with the common connection grounded to the case.

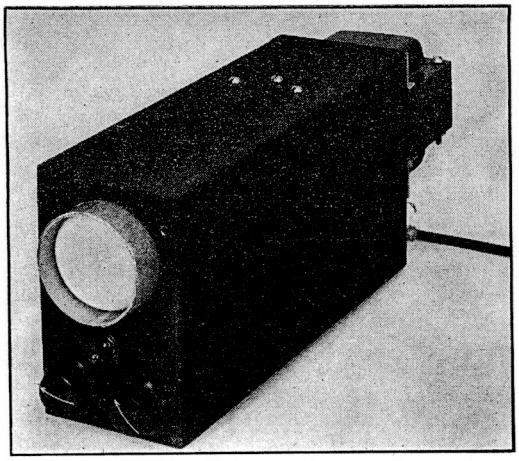

Fig. 1924 — A c.r. oscilloscope using a 902 2-inch tube, housed in a 5 × 10 × 3-inch chassis with bottom plate. Two small feed-through insulators serve as terminals for external horizontal- and vertical-sweep connections. Note the location of the power transformer; it is placed not only outside the steel shield chassis but also directly behind the cathode-ray tube, with the axis of the transformer winding along the axis line of the tube.

It is important that provision be included for switching off the electron beam, reducing the spot intensity, or swinging the beam to one side of the screen with d.c. bias when no signal voltage is being applied. A pattern that is a thin, bright line or a spot of high intensity will "burn" the screen of the cathode-ray tube.

Horizontal sweep voltage may be obtained either from an audio-frequency source (such as the modulator stage of the transmitter) or from the 60-cycle a.c. line. Using an a.f. horizontal sweep, the pattern appearing on the screen will be in the form of a trapezoid or triangle (depending on the percentage of modulation) when checking transmitter performance.

For actual studies of waveform, the use of a sweep circuit having a linear time base is necessary (§ 3-9). The sweep circuit proper usually employs a grid-controlled gaseous discharge tube (the 884 and 885 are especially designed for this purpose), operating as a relaxation oscillator. In operation, the sweep circuit is connected to the horizontal-deflection plates of the existing oscilloscope. The voltage under observation is connected to the vertical-deflec-

Fig. 1925 — Circuit of the 2-inch oscilloscope.
C — 2-μfd. 900-volt electrolytic (dual 4-μfd. 450-volt with sections in series).
R_1 — 100,000-ohm potentiometer.
R_2 — 50,000 ohms, 1-watt.
R_3 — 200,000 ohms, 2-watt.
R_4 — 100,000-ohm potentiometer.
RFC — 2.5-mh. 125-ma. r.f. choke (optional; used when needed to correct leaning patterns because of r.f. coupling).
SW_1 — S.p.d.t. toggle switch, 250-volt 1-ampere.
SW_2 — S.p.s.t. switch (on R_4).
T — Receiver-type power transformer delivering 325-0-325 volts a.c. at 40 ma., 5 volts at 3 amperes, and 6.3 volts at 2 amperes.

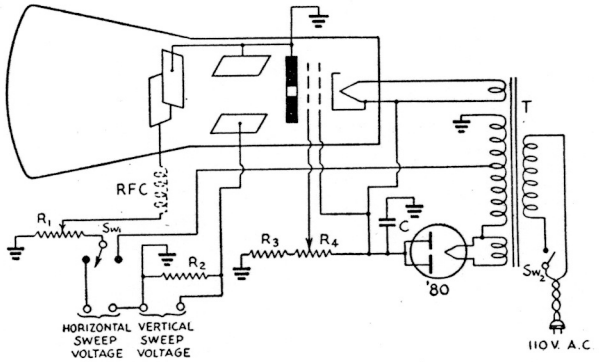

tion plates, and the resulting picture is an accurate representation of the waveshape of the voltage being examined.

An example of a linear sweep circuit and wide-range amplifiers applied to a 902 2-inch cathode-ray tube is shown in Fig. 1926. The circuit elements in the center of the diagram comprise the sweep circuit. The 884 generates a saw-tooth sweep voltage and the 6J7 acts as a current-limiting tube to ensure linearity.

The high-gain vertical and horizontal amplifiers using 6J7s have inductance compensation in their plate circuits to extend the frequency range. The amplifier input and output leads should be direct and placed well clear of other components, to avoid frequency distortion and unwanted pick-up. For r.f., the input is applied directly to the deflection plates.

The panel controls are the intensity control, R_2; focusing control, R_3; horizontal and vertical spot-positioning controls, R_7 and R_8; sweep-amplitude control, R_{14}; sweep-frequency vernier, R_{17}; synchronization control, R_{18}; direct-input controls, R_{19} and R_{20}; and the amplifier input controls, R_{23}.

For the 902 power supply, a replacement-type transformer may be used with a half-wave rectifier. (*Bib. 5.*)

The cathode-ray oscilloscope is useful in the measurement of almost any quantity involving amplitude or waveform. Elsewhere in this *Handbook* are described methods for using the oscilloscope for measuring audio frequencies (p. 400), adjusting vibrator power supplies (p. 363), and checking and adjusting modulation percentage in 'phone transmitters, (§ 5–10).

When used for measuring voltage, the signal is applied to the vertical plates and its amplitude measured in terms of the height of the resulting trace. Approximate measurements can be made by calibrating the sensitivity of the cathode-ray tube in volts per inch. The sensitivity varies with the anode voltage and type of tube; typical figures for small tubes are 25 to 75 volts per inch, peak-to-peak. The initial calibration can be made with a variable d.c. voltage source and a comparison voltmeter.

Impedance can be measured at any frequency by connecting the circuit or component under measurement in series with a non-reactive resistor across a source of signal voltage of the required frequency. The relative deflection as the oscilloscope is connected across first the resistor and then the impedance will give the value of impedance with respect to the known value of resistance.

Transformer turns ratios and gain ratios, as well as the gain of amplifier stages, can be determined by applying a signal of appropriate frequency from an audio oscillator or r.f. signal generator to the primary or input, measuring the amplitude at this point, and then measuring the relative amplitude across the secondary or output (§ 2-9).

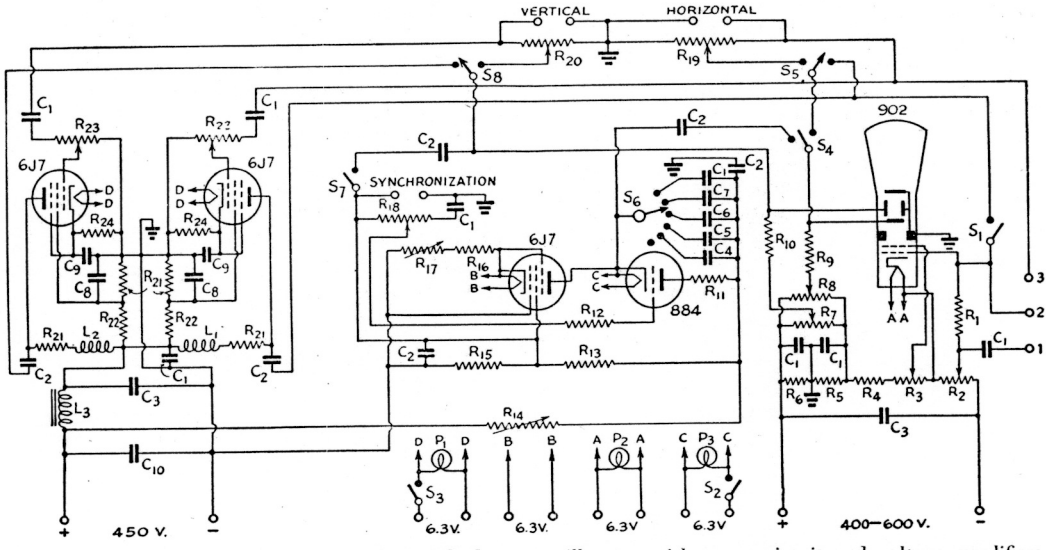

Fig. 1926 — Circuit diagram of a complete cathode-ray oscilloscope with sweep circuit and voltage amplifiers.

C_1 — 0.1-μfd. 600-volt paper.
C_2 — 0.25-μfd. 600-volt paper.
C_3 — 8-μfd. 500-volt electrolytic.
C_4 — 0.0001-μfd. 400-volt paper.
C_5 — 0.001-μfd. 400-volt paper.
C_6 — 0.005-μfd. 400-volt paper.
C_7 — 0.025-μfd. 400-volt paper.
C_8 — 0.01-μfd. 400-volt paper.
C_9 — 5-μfd. 25-volt electrolytic.
C_{10} — 16-μfd. (dual 8-8 in parallel) 500-volt electrolytic.
R_1 — 300,000 ohms, ½-watt.
R_2 — 25,000 ohms, 1-watt.
R_3 — 50,000 ohms, 1-watt.
R_4 — 75,000 ohms, 1-watt.
R_5, R_6 — 30,000 ohms, 1-watt.
R_7, R_8 — 1-megohm potentiometer.
R_9, R_{10} — 5 megohms, ½-watt.
R_{11} — 1000 ohms, 1-watt.
R_{12} — 300,000 ohms, 1-watt.
R_{13} — 40,000 ohms, 1-watt.
R_{14} — 50,000-ohm wire-wound rheostat.
R_{15} — 6000 ohms, 2-watt.
R_{16} — 1500 ohms, 1-watt.
R_{17} — 50,000-ohm rheostat.
R_{18} — 500,000-ohm potentiometer.
R_{19}, R_{20} — 5-megohm potentiometer.
R_{21} — 100,000 ohms, 1-watt.
R_{22} — 150,000 ohms, 1-watt.
R_{23} — 500,000-ohm potentiometer.
R_{24} — 1000 ohms, ½-watt.
S_1, S_2, S_3 — S.p.s.t. toggle switch.
S_4, S_5, S_8 — S.p.d.t. toggle switch.
S_6 — 6-contact selector switch.
S_7 — Snap switch, mounted on R_{18}.
L_1, L_2 — 25-mh. r.f. choke.
L_3 — 30-henry 15-ma. filter choke.
P_1, P_2, P_3 — Jeweled pilot lamps.

R, Z, C, L and Q Measurements

It is frequently necessary to measure values of components used in the construction of amateur equipment — resistors, condensers, coils, etc. — both as a means of identification and in checking accuracy. The advanced amateur will also be interested in measuring impedances and the characteristics of devices of his own construction or under other than rated conditions.

Resistance — The volt-ammeter, ohmmeter and Wheatstone bridge methods are commonly used in measuring resistance. In the volt-ammeter method, the resistance is determined from Ohm's Law by measuring the current through the resistor when a known d.c. voltage is applied. The resistance can be determined with a voltmeter alone, when

$$R = \frac{eR_m}{E} - Rm$$

where R is the resistance under measurement, E is the voltage read on the meter, e is the series voltage applied, and R_m is the internal resistance of the meter (full-scale reading $\times$ ohms-per-volt).

The ohmmeter is a practical application of this method, with a low-current d.c. voltmeter and a source of voltage (usually dry cells) connected in series with the unknown resistance. If the meter reads full-scale with the connecting leads shorted, insertion of the resistance under measurement will cause the reading to decrease in proportion to the resistance inserted. The scale thus can be calibrated in ohms.

In Fig. 1927-A, the series resistance is adjusted until the milliammeter reads full-scale when the test leads are shorted. When the meter reading changes as the battery ages the series resistance is reduced to compensate for the change. In B, the series resistance is kept constant but the sensitivity of the meter is varied to compensate for the changing voltage. The circuit of C is useful for measuring resistances below a few hundred ohms. The unknown resistance is connected as a shunt across the meter, reducing the current reading. Values of a fraction of an ohm can be read in this way.

The ratio of resistances which can be measured on a single ohmmeter range averages about 100 to 1, or from one-tenth to ten times the center-scale value.

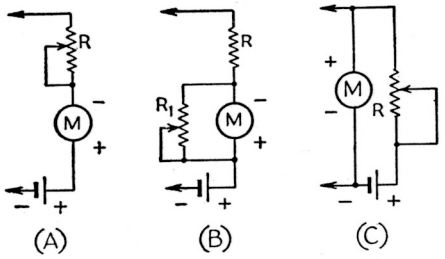

Fig. 1927 — Basic ohmmeter circuits. (A) Series-type ohmmeter with series compensation. (B) Series-type ohmmeter with shunt compensation. (C) Shunt-type ohmmeter used for measuring low values of resistance.

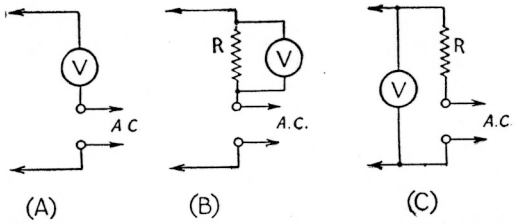

Fig. 1928—Reactance-meter circuits for checking C and L.

Only approximate measurements can be made with an ohmmeter. For greater accuracy, the unknown resistor may be compared with a standard resistance of known accuracy by means of a Wheatstone bridge (§ 2-11). If resistance measurements only are to be made, the bridge can be powered from a battery and a milliammeter used for the balance indicator. If reactances also are to be measured, an a.c. source is required (Fig. 1929).

Capacity and inductance — The capacity of condensers and the inductance of coils can be measured (a) in terms of their reactance, (b) by comparison with a standard, or (c) by substitution methods.

The reactance method is simplest but least accurate. The method is similar to the d.c. ohmmeter, except that impedance is measured instead of resistance. In Fig. 1928-A, the unknown reactance is placed in series with an a.c. rectifier-type voltmeter across the 115-volt a.c. line. With a 1000-ohms-per-volt meter, capacities can be identified from approximately 0.001-μfd. to 0.1-μfd. At B the reactance is connected in series with a 1000-ohm resistance; the proportionate voltage drop across this resistance indicates the reactance of condensers from 0.1 μfd. to 10 μfd. and of inductances from 0.5 henry to 50 henries, when Q is greater than 10. Because the lower end of the scale of a rectifier-type meter is somewhat crowded, a better reading can be had by using the connection at C for large reactances. Approximate calibrations for each connection may be made by checking typical condensers and coils of known values and drawing calibration curves for the voltmeter in use.

The reactance method at best gives only approximate indications of inductance and capacity. For accurate measurements, an a.c. bridge must be used.

A simple bridge for the measurement of R, C and L is shown in Fig. 1929. Its accuracy will depend on the precision of the standards, the sensitivity of the detector or balance indicator, the voltage and frequency of the a.c. source, and the ratio of the unknown value to the standard. The signal source can be a 1000-cycle audio oscillator with low harmonic content and the detector a pair of headphones. A "magic-eye" tube can be used as a detector.

For maximum accuracy the ratio of the unknown to the standard should be kept small, so that R is read near the center of its scale. The ratio can be as high as 10 to 1 in either direction with good accuracy, and an indication can

be had even at 100 to 1. Additional standards may be included for other ranges if desired.

The potentiometer, R, must be calibrated as accurately as possible in terms of the *ratio* of resistance on either side of its mid-point, which may be arbitrarily marked 10. If the potentiometer is next set at 500 ohms, the ratio of resistances is 1 to 10 and the scale may be marked 1. The corresponding point on the other end of the scale is marked 100. Intermediate points are similarly marked according to the resistance ratios. These ratios will then correspond with the ratio of the unknown resistance, inductance or capacity to the standard in use, when the bridge has been balanced for a null indication on the detector.

Since direct current flowing through a coil changes its inductance, allowance must be made for this effect when measuring choke coils and transformers carrying d.c.

Condensers should be checked for leakage as well as for capacity. This check must be made with the rated d.c. voltage applied, a microammeter being connected in series with the high voltage source. The resistance of good paper condensers should be above 50 megohms per microfarad, that of mica condensers above 100.

The condition of electrolytic condensers can be checked roughly with an ohmmeter. With the positive terminal of the condenser connected to the positive of the ohmmeter battery, high-voltage electrolytics should show a resistance of 0.5-megohm or so; low-voltage cathode by-pass condensers should be over 0.1 megohm. Electrolytics can also be checked by measuring the leakage current when the rated d.c. polarizing voltage is applied. It should read about 0.1 ma. per μfd. The maximum for a useful unit is about 0.5 ma. per μfd. Low leakage current also indicates a faulty unit. Electrolytic condensers which have lain idle on the shelf will show leakage currents as high as 2 ma. per μfd. per 100 volts. After "aging" for a few minutes with rated d.c. voltage applied they should return to normal, however.

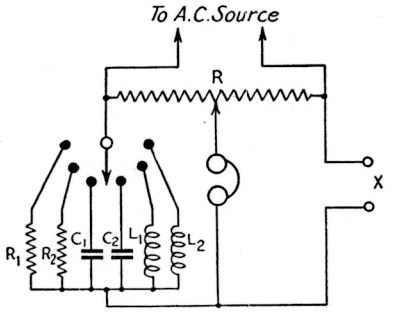

Fig. 1929 — Simple a.c. bridge for measuring R, C and L.
C_1 — 0.01-μfd. mica.
C_2 — 1.0-μfd. paper.
R — 10,000-ohm linear wire-wound potentiometer.
R_1 — 100 ohms, wire-wound (1 per cent accuracy).
R_2 — 10,000 ohms, wire-wound (1 per cent accuracy).
L_1 — 125-millihenry powdered-iron-core r.f. choke.
L_2 — 12-henry iron-core choke (Thordarson T-49C91).

The measurement of small capacities under 0.001 μfd. is not possible with a bridge of the type previously described because stray reactances affect the accuracy. A more accurate bridge for measurement of small capacities is shown in Fig. 1930. It is of the substitution type with a calibrated air condenser, C_1, for the variable arm. C_2 is a fixed reference capacity.

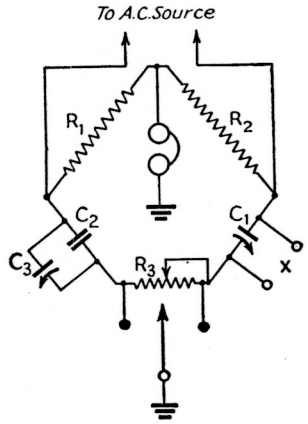

Fig. 1930 — A substitution-type capacity bridge.
C_1 — 100-$\mu\mu$fd. straight-line-capacity condenser (may be dual 500-$\mu\mu$fd. with sections in parallel).
C_2 — 900-$\mu\mu$fd. silver-mica.
C_3 — 100-$\mu\mu$fd. variable trimmer.
R_1, R_2 — 500-ohm wire-wound (1 per cent accuracy).
R_3 — 1000-ohm wire-wound potentiometer.

C_3 is used to balance out stray capacity including that of the leads to C_x. The bridge is first balanced by adjusting C_3, with C_1 at maximum capacity and the leads to C_x in place. C_x is then connected and the bridge again balanced by adjusting the capacity of C_1 to compensate for C_x. The difference in capacity (ΔC) of C_1 between its new setting and maximum capacity is the capacity of C_x.

It is impossible to get a zero null indication from the detector unless the resistance as well as the capacity of the two condensers being compared are equal. R_3 is therefore included to aid in achieving a resistive balance. Generally speaking, R_3 will be in the C_2 leg when measuring a mica condenser and in the C_1 leg for an air condenser. The bridge is brought into balance by alternately varying the standard capacity, C_1, and equalizing the power factor by means of R_3 until zero indication is obtained.

The bridge can be made direct-reading in $\mu\mu$fd. by using a dial with 100 divisions and a 10-division vernier (such as the National Type N), installed so that 0 on the dial corresponds to maximum capacity on C_1. Then, as the capacity of C_1 is decreased to compensate for the addition of C_x, $C\Delta$ is numerically equal to the dial reading times 10. The true capacity of C_1 will depart from linearity with the dial setting as it nears zero, but the percentage error remains small up to at least 90 on the dial ($C_x < 900$ $\mu\mu$fd). The over-all accuracy can be made better than 1 per cent.

Neon-Tube Parts Checker — A useful instrument for measuring resistance and capacity and even voltage which does not require a meter is the neon-tube parts checker shown in Figs. 1931–1934. (*Bib. 4.*) By making use of the fact that the extinction voltage of a neon or argon tube is constant within close limits, this device measures voltage, resistance and capacity over a useful range of values. The tube is shunted across the variable portion of a voltage divider and the divider adjusted to bring the neon-tube voltage just to the extinction point. The values are read directly from a calibrated scale associated with the voltage divider.

With the insulation and resistances used, d.c. voltages between 70 and 1500 and a.c. voltages between 50 and 800 can be measured fairly accurately. Resistances from 0 to 500,000 ohms and capacities between 0.0025 μfd. and 4 μfd. also can be measured.

Referring to Fig. 1932, the transformer, T, with its associated switch, S_1, and potentiometer, R_1, provides a means of adjusting the voltage across the voltage divider, R_2 to R_6 (including the unknown resistance or capacitive reactance to be measured), to approximately the 96 volts required, regardless of the line voltage. For a line voltage of 120 volts, the secondary voltage of the bell-ringing transformer must be increased to 24 volts (the nominal secondary voltage is 10) in order to reduce the voltage to 96. This requires the addition of some 240 turns of No. 28 enameled wire to the secondary of the bell-ringing transformer, T. The secondary voltage must equal the difference between 96 volts and the highest voltage encountered on the a.c. line. In practice, with S_1 in the "low" position, R_3, R_4 and R_6 at minimum and the test leads shorted, adjusting R_1 should extinguish the neon lamp.

R_2 and R_6 are current-limiting resistors which permit measuring low-wattage resistors safely. R_6, being in series with one side of the a.c. power line, protects the line against a short circuit in case of accidental contact via a test lead to a grounded chassis. The terminal to which R_6 is connected should be marked "Ground." To insure that this terminal is on the "cold" side of the line reverse the power plug until the neon lamp glows when a test lead from the terminal connected to R_5 is touched to an actual ground connection, such as a radiator or water pipe.

R_3, R_4 and R_5 are the adjustable part of the voltage divider, and, when adjusted to the point where the neon glow is just extinguished, equal the resistance being measured. These resistors are calibrated in terms of resistance and capacity. For voltage measurements, the variable resistors may be calibrated in terms of applied voltage. Voltages below the value required to make the lamp glow — in general, somewhat higher than the extinction voltage — cannot be measured, but for a.c. voltages above 50 and d.c. voltages from 70 volts upward the method is quite satisfactory.

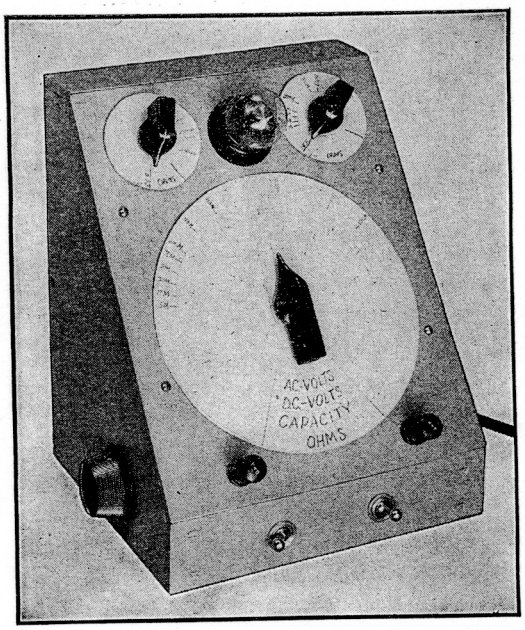

Fig. 1931 — Front view of the neon-tube parts checker, showing the main calibrated dial in the center, the 0–5,000-ohm resistance scale, upper left, and the 0–50,000-ohm resistance scale, upper right. The small knob on the left-hand side is the line-voltage compensator control.

S_2, when thrown to the right, connects the voltage-divider system to the a.c. power source, and also at the same time connects the rotary arm of R_5 to the upper test lead. These connections are for making resistance or capacity measurements. For voltage measurements S_2 is thrown to the left, disconnecting the internal power source, breaking the connection of the rotary arm of R_5 to the upper test lead, and connecting R_6 to R_2. For all voltage measurements below 500 this checker draws less current than the common 1000-ohms-per-volt meter.

For accurate reading the variable potentiometers (R_3, R_4 and R_5) should have a useful rotational arc as great as possible. Actually, no resistor of this type is absolutely linear for every degree of dial rotation. Good resistors are, however, linear from approximately 25 to 87 per cent of their total rotation. The actual mid-point of the total resistance comes at approximately 56 per cent of the total rotation (clockwise); 36 per cent of total rotation is required to give one-quarter total resistance, while three-fourths of the resistance is covered by 78 per cent of the total rotation.

Four initial calibration points may thus be obtained. Additional points can be secured by subdividing. The same procedure is followed in calibrating the other two potentiometers.

If an ohmmeter is available, the individual potentiometers, whether linear or tapered, can be accurately calibrated. A voltmeter will give a voltage calibration as accurate as is the original meter. For capacity calibration, readings can be taken on groups of 1-μfd., 0.5-μfd.,

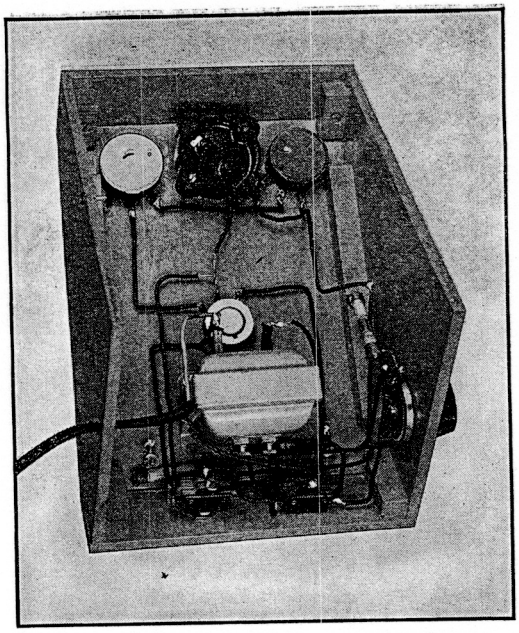

Fig. 1932 — Interior view of the neon-tube checker showing the general arrangement of the "meterless meter" and the method of assembling the plywood cabinet.

0.25-μfd., 0.1-μfd., 0.01-μfd., etc., condensers, averaging the readings for each group.

If a voltmeter is not available for voltage calibration, the scale can be calculated as follows. The total resistance across the external voltage is always 500,000 ohms (within the limits of resistor accuracy) and for d.c. the extinction voltage across the neon lamp must be dropped to 62 volts, while for a.c. it must go down to 48 volts. The resistance needed across the neon lamp to reduce the external voltage to the extinction point of the lamp is, for a.c., equal to 48 × 500,000 divided by the external voltage; for d.c. the resistance across the lamp equals 62 × 500,000 divided by the external voltage. The resistance of R_6 can be ignored.

Before making measurements, the neon lamp should be given an initial two-minute warm-up. To do this, plug in the power cord, snap S_1 to the high position, snap S_2 to the right or ohms-capacity position, turn the main dial to the maximum resistance position, and short the binding posts with a test lead.

Line-voltage adjustment is the next step. Leave the binding posts shorted and, after turning all front-panel dials to zero, attempt to extinguish the neon glow by turning the dial of R_1 (mounted on the left side). If this fails, snap S_1 to the low position and again turn R_1 until the glow is just extinguished. It must first be possible to light the neon lamp and then extinguish it with R_1. If it is neither possible to light nor extinguish the indicator lamp with any combination of R_1 and S_1, there are not enough turns on the secondary of transformer.

The test leads are now clipped across an unknown external resistance. Turn the main dial, R_5, to the right until the neon glows, then back it off until the glow is extinguished and note the reading on the ohms scale. If the lamp does not glow with R_5 at maximum, the unknown resistor is more than 500,000 ohms.

Although the main 500,000-ohm potentiometer is capable of measuring resistances as low as 100 ohms with fair accuracy, the other two dials are added to provide "calibration spread" for the 0–5000-ohm and 0–50,000-ohm scales, respectively. Whenever one of the three front dials is in use, the other two must remain at their zero settings.

Electrolytic condensers cannot be measured with this checker, as a.c. is present across the test leads. All other condensers are measured in the same manner as resistors. With all front panel dials at zero, clip the test leads across the unknown capacity, turn the main dial until the lamp glows, back it off to the extinction point, and read the value on the capacity scale. The same procedure is followed in making voltage measurements, S_2 being switched to the "A.C.-D.C. Volts" position.

As shown in Fig. 1934, the cabinet is made from a piece of ¼-inch plywood 32⅜ inches long and 6¾ inches wide. Full dimensions are given in the drawing. Wooden dowels, ½-inch square, are used in the corners. The transformer and the neon-lamp socket are mounted on the back of the front panel by machine screws which are self-threaded into undersized holes drilled to a depth of 3/16 inch into the plywood.

The main dial chart is a 5½-inch diameter paper circle, bearing four circular scales spaced ⅜-inch apart. The pointer is made from a piece of celluloid, cemented to the bakelite knob. The other dials are 2-inch paper circles.

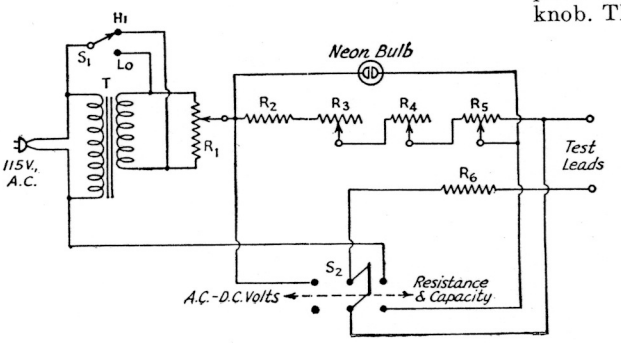

Fig. 1933 — Circuit of the neon-tube checker.
R_1 — 300-ohm potentiometer, wire-wound (Centralab V125).
R_2, R_6 — 2,000 ohms, 2-watt.
R_3 — 5,000-ohm potentiometer (Centralab 72–110).
R_4 — 50,000-ohm potentiometer (Electrad 205).
R_5 — 500,000-ohm potentiometer (Centralab 72–106 or N118).
S_1 — S.p.d.t. toggle switch.
S_2 — D.p.d.t. toggle switch.
T — Bell-ringing transformer.

L, C and Q measurements at r.f. — The low-frequency a.c. bridge method of measuring inductance is of value only for the high-inductance coils used at power and audio frequencies. I.f. and r.f. coils must be measured at the frequencies at which they are used.

The method commonly employed is to determine the frequency at which the coil resonates when connected across a capacity of known value. This may be done (1) by connecting the coil-condenser combination in a two-terminal oscillator (§ 3-7) and observing the resulting oscillation frequency on a calibrated receiver, or (2) by connecting the coil to a calibrated condenser, supplying the circuit with r.f. power from a suitable oscillator, and tuning the condenser until resonance is indicated by maximum indication on a vacuum-tube voltmeter (Fig. 1935). With the capacity known in $\mu\mu$fd. and the resonant frequency in kc., the apparent inductance of the coil in microhenries can be computed:

$$L = \left(\frac{159,160}{f}\right)^2 \frac{1}{C}$$

The apparent inductance thus computed is in error, however, in that it also includes the distributed capacity of the coil. This will be discovered if a similar measurement is made at another frequency (for example, the harmonic of f_1), for it will be found that a different value of inductance results. However, by combining the two measurements the true inductance can be found (*Bib. 6.*):

$$L = \frac{10^{12}}{13.15 f_2^{\,2}} \times \frac{1}{C_1 - C_2}$$

when f_2 is the second harmonic of f_1, C_1 is the capacity required to tune to f_1, and C_2 the capacity required to tune to f_2.

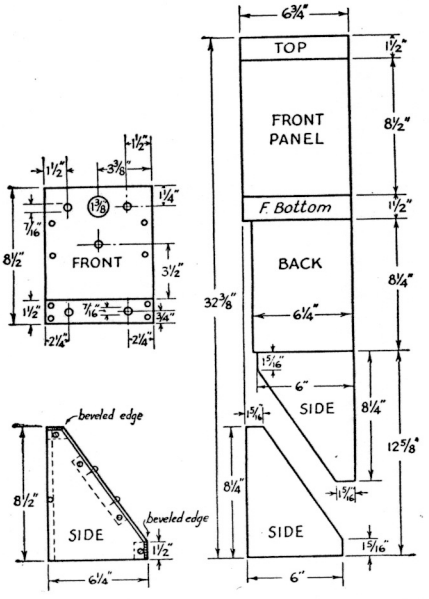

Fig. 1934 — Dimensions of the parts-checker cabinet.

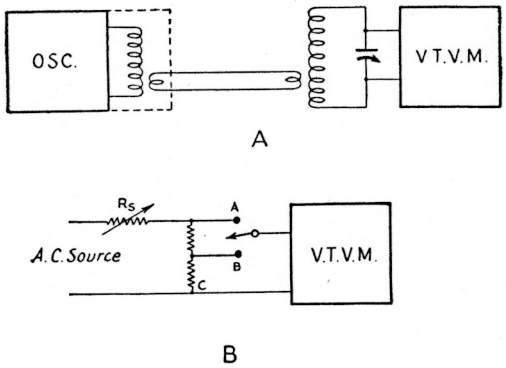

Fig. 1935 — (A) Circuit used for measuring inductance, capacity and Q at r.f. The calibrated variable-frequency oscillator should have a tuning range in excess of 2-to-1. (B) Circuit for calibrating the v.t.v.m. for Q measurements from 60-cycle a.c. R_{BC} is 70.7 per cent of R_{AC}. With the switch in position A, R_S is adjusted to give a voltmeter deflection near the upper part of its scale; this is the peak-deflection reference point. The switch is then turned to position B, and the new reading noted. By making a number of measurements with different initial input levels, a graph can be plotted showing both peak and 70.7 per cent readings for a wide range of inputs.

A convenient source of r.f. power for the two-frequency method of inductance measurement is the transmitter exciter unit, provided it has good second harmonic output. The oscillator output and link circuit (shown inside dashed lines in Fig. 1935) should be either shielded or sufficiently remote from the measuring circuit so that the vacuum-tube voltmeter shows no indication when there is no coil in the circuit. The calibrated condenser must, of course, have sufficient capacity to tune over a 2-to-1 frequency range. This condenser may be calibrated by means of a bridge such as the substitution-type capacity bridge of Fig. 1930.

The resonance method can also be used for accurate measurement of capacity. A standard coil of suitable inductance must be provided; the exact value is not important. The standard condenser, C_1, is first tuned to resonance with the oscillator frequency. The unknown capacity, C_x, is then added in parallel and the capacity of C_1 reduced until the circuit again resonates at the oscillator frequency. The difference between the two settings (ΔC) represents the capacity of C_x.

The arrangement of Fig. 1935 is additionally useful in that it can be used as a Q meter, and thus can be used for measuring r.f. resistance and impedance.

As is shown by Fig. 1936, resistance in a tuned circuit broadens the resonance curve. Measuring the frequency difference between the two points at which the output voltage equals 70.7 per cent of the peak voltage (where the resistance in the circuit equals its reactance), will give the Q of coils and condensers.

There are two methods of determining these points. One involves the use of a calibrated variable frequency oscillator to de-

termine the band-width in terms of frequency change and the other a calibrated variable condenser to measure the capacity change.

When the calibrated variable oscillator and v.t.v.m. are used, the frequency and r.f. voltage at resonance are first noted. The oscillator frequency is then varied on either side of resonance until the v.t.v.m. reads 70.7 per cent of its initial value. Then Q is equal to the frequency divided by the band-width:

$$Q = \frac{f_r}{\Delta f}$$

where Δf is the difference between f_1 and f_2.

When the frequency of the oscillator is fixed and a calibrated variable condenser is used, the capacity at resonance (C_r) is noted, as well as that on either side at which the meter reads 70.7 per cent of maximum. Then

$$Q = \frac{2\ C_r}{C_2 - C_1}$$

The foregoing applies to measurement of the Q coils. Actually, the figure of Q thus derived is not that of the coil alone but of the tuned circuit as a whole, including the condenser. The Q of the standard condenser must, therefore, be kept high. An efficient air condenser with steatite or mycalex insulation is required; it should be operated near maximum capacity. Use short, heavy leads and keep the stray capacities as low as possible.

The Q of other air condensers and of mica condensers can be determined by first measuring the Q of the circuit with a standard coil in place, and then connecting C in parallel with C and again measuring the Q. The Q of the unknown condenser is

$$Q_x = \frac{(C_1 - C_2)\ Q_1\ Q_2}{C_1\ (Q_1 - Q_2)}$$

Low-Q mica and paper condensers ($Q <$ 1000) can be measured by inserting the unknown in series with L and C. Q_1 is measured with a shorting bar across the unknown; the bar is then removed and Q_2 determined. Then

$$Q_x = \frac{(C_2 - C_1)\ Q_1\ Q_2}{C_1\ Q_1 - C_2\ Q_2}$$

If C_2 is larger than C_1, the reactance is inductive rather than capacitive; i.e., the "condenser" is actually an inductance at the measurement frequency.

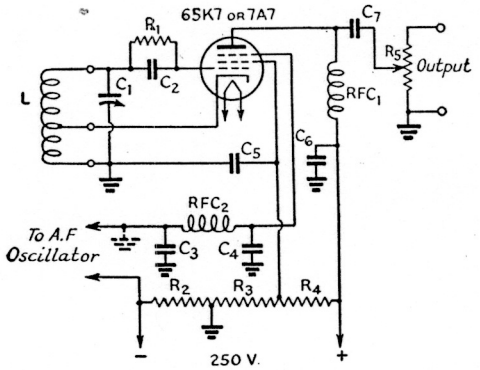

Fig. 1937 — Simple i.f. test oscillator circuit diagram.
C_1 — 100-$\mu\mu$fd. variable with 200-$\mu\mu$fd. fixed silver-mica zero-drift in parallel.
C_2 — 100-$\mu\mu$fd. midget mica.
C_3, C_4 — 250-$\mu\mu$fd. midget mica.
C_5 — 0.005-μfd. mica.
C_6 — 0.1-μfd. 400-volt paper.
C_7 — 500-$\mu\mu$fd. midget mica.
R_1 — 50,000 ohms, ½-watt.
R_2 — 2000 ohms, ½-watt.
R_3 — 20,000 ohms, 1-watt.
R_4 — 20,000 ohms, 2-watt.
R_5 — 500-ohm carbon potentiometer.
L — 440–510 kc.: 140 turns No. 30 e. close-wound on 1½-inch diameter plug-in form. Cathode tap 35 turns from ground end.
1400–1550 kc.: 42 turns No. 20 d.s.c. on 1½-inch diameter form, tapped 10 turns.
4500–5500 kc.: 11 turns No. 18 e. on 1½-inch diameter form, spaced wire diameter, tapped 3 turns.
RFC_1 — 2.5-mh. r.f. choke.
RFC_2 — 25-mh. r.f. choke.

The r.f. resistance, reactance and impedance of other components can be measured by the same methods. If an external r.f. impedance (such as an antenna or transmission line or an r.f. choke) is inserted in a coil-condenser circuit, it will both detune the circuit and broaden its resonance curve. By observing the capacity required to bring the circuit back to resonance and measuring the additional resistance introduced, by re-measuring the Q, the reactive and resistive components of the external impedance can be computed.

Using a standard coil and condenser suitable for the operating frequency, connect the unknown quantity across C_1 (for high resistances) or in series with L and C (for low resistances), and proceed as previously outlined. If C_1 must be increased to restore resonance, the reactance of the unknown is inductive; if it must be decreased, the reactance is capacitive.

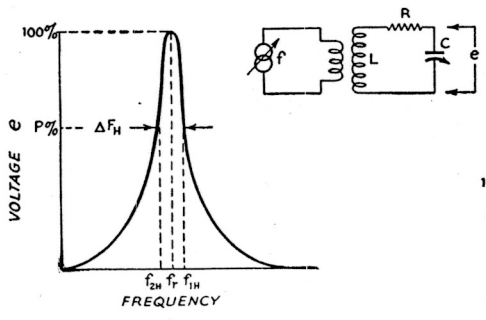

A

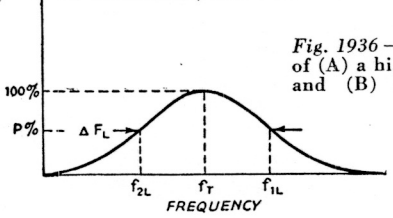

B

Fig. 1936 — Resonant curves of (A) a high-Q tuned circuit and (B) a low-Q circuit.

¶ Receiver Characteristics

Measurements in connection with receiving equipment come under two heads: (1) over-all performance, and (2) servicing and alignment. The measurement of receiver performance requires precision laboratory equipment beyond the scope of the average amateur. Sufficient apparatus for servicing receivers should be

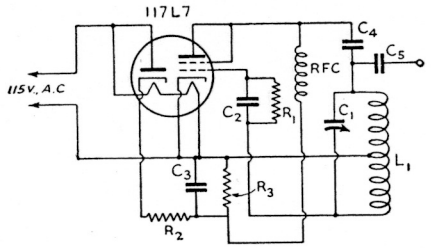

Fig. 1938 — Simple test oscillator for receiver alignment.
C_1 — 350-$\mu\mu$fd. variable.
C_2, C_5 — 250-$\mu\mu$fd. mica.
C_3 — 40-μfd. 250-volt electrolytic.
C_4 — 0.001 to 0.005 μfd. mica.
R_1 — 0.1 megohm, ½-watt.
R_2, R_3 — 50,000 ohms, ½-watt.
L_1 — See Fig. 1937.
RFC — 10 mh. or larger r.f. choke.

available in every amateur station, however. This may be as little as a multi-range volt-ohm-milliammeter, a test-signal source of some description, and a few spare tubes.

For the alignment of tuned circuits a simple test oscillator is required, preferably one that can be modulated by a 400-cycle audio oscillator. A rectifier-type voltmeter may be used for the output meter.

A heterodyne frequency meter is a suitable signal source for r.f. alignment, provided the harmonic amplitude on the higher frequencies is great enough. A harmonic amplifier and output attenuator are useful in this application.

The i.f. test oscillator circuit shown in Fig. 1937 consists of a simple e.c.o. with plug-in coils. The output level is controlled by a potentiometer so connected as to present a constant input resistance to the receiver. The oscillator should be shielded so that direct pick-up is minimized. Make all ground returns to a heavy copper strap connected to the cabinet at the output ground terminal. The plug-in coil should be separately shielded.

The test oscillator may be suppressor-grid modulated by applying approximately 10 volts of audio (for 50 per cent modulation), as shown in the diagram. The suppressor-grid is biased 10 volts negative for modulated use; if an unmodulated signal is desired, the upper terminal may be grounded as indicated. This will increase the output from the oscillator. Conversely, if the output potentiometer does not attenuate the signal sufficiently additional d.c. negative bias may be applied between the modulation terminals.

An even simpler test oscillator requiring no external power supply is shown in Fig. 1938. The tetrode section of the 117L7 is connected as a triode in a simple Hartley circuit, while the rectifier supplies plate voltage through a resistance-capacity filter. Output is taken from C_5.

The i.f. test oscillator may be calibrated by beating harmonics against signals of known frequency in the b.c. band. Frequencies between 465 kc. and 275 kc. can be spotted by using the second harmonic of the oscillator, while the remainder of the range to 175 kc. can be checked by using the third harmonic.

Ordinarily, however, precise calibration is not required. Most communications receivers are equipped with a crystal filter and for i.f. alignment the oscillator frequency is set to correspond with the crystal response (§ 7–17). If the receiver contains no crystal filter the oscillator should be set at the design i.f. as closely as its calibration will permit.

For use with an unmodulated test signal, the output indicator may be the "S"-meter in the receiver, a microammeter in the detector or a.v.c. circuit, or a vacuum-tube voltmeter. It is not advisable to use the receiver beat oscillator to generate an audible note for output indications. When a modulated test signal is used, the output indicator may be a copper-oxide rectifier-type voltmeter which reads the a.f. voltage across the rated output load resistance. Power output can be computed by Ohm's Law.

The a.f. modulating source for the test oscillator can be any audio oscillator capable of delivering 10 to 20 volts at the standard receiver-checking frequency of 400 cycles.

A useful audio oscillator circuit is shown in Fig. 1939. It is a two-terminal or "transitron" oscillator (§ 3-7) using a pentagrid tube. A frequency of approximately 400 cycles is generated with the tuned-circuit values shown. A variable-frequency oscillator can be made by inserting a resistance, R, in the tuned circuit, between L and ground. The highest frequency available is determined by L and C alone. Increasing R will decrease the frequency. If R is made 5000 ohms, a frequency ratio of about 5 to 1 can be obtained. A good-quality wire-wound variable resistor should be used. If difficulty is had making the tube oscillate over the entire range, try other values of R_1 and C_2.

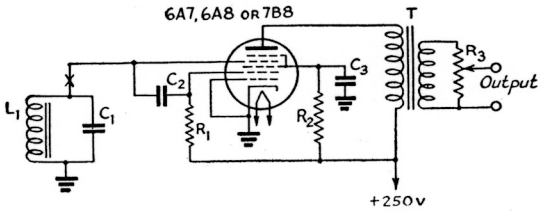

Fig. 1939 — Simple negative-resistance audio oscillator.
C_1 — 0.15-μfd. 400-volt paper.
C_2, C_3 — 0.1-μfd. 400-volt paper.
C_3 — 0.25-μfd. 200-volt paper.
R_1, R_2 — 50,000 ohms, 1-watt.
R_3 — 50,000-ohm volume control.
L_1 — 1.2-henry choke (Thordarson T-14C61 with iron core removed).
T — Output transformer (interstage audio, 1:3 ratio).

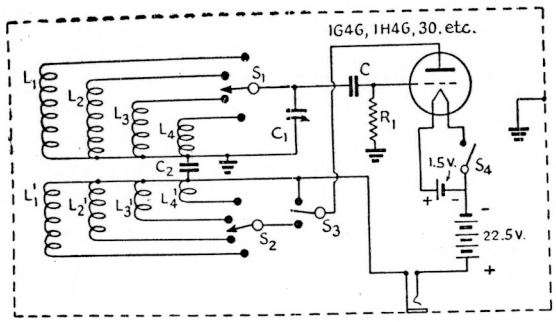

Fig. 1940 — Simple monitor for c.w. and 'phone.
C_1 — 50-$\mu\mu$fd. midget variable.
C_2 — 0.002-μfd. midget mica.
C_3 — 100-$\mu\mu$fd. midget mica.
R_1 — 1 megohm, ½-watt.
S_1–S_2 — 2-section 4-position rotary band switch.
S_3 — S.p.d.t. low-capacity switch.
S_4 — Toggle switch.

Band	*L*	*L'*
1.7 Mc.	90 turns No. 30 e.	24 turns
3.5 Mc.	50 turns No. 30 d.c.c.	16 turns
7 Mc.	30 turns No. 22 d.c.c.	10 turns
14 Mc.	10 turns No. 22 d.c.c.	7 turns

All coils close-wound on 1-inch forms, adjacent coils at right angles. L and L' spaced ¼-inch apart.

Transmitter Characteristics

The transmitter characteristics ordinarily requiring measurement are d.c., a.c. and r.f. voltages and currents, keying and modulation quality, and modulation percentage. Instruments for the measurement of voltages and currents have been discussed. Keying and modulation checks may be made by several methods; the two commonly used by amateurs are aural checks with monitors, and visual checks with the oscilloscope (§ 5-10).

Monitors — A monitor is a miniature receiver, usually having only a single tube, enclosed with its batteries in some sort of metal box which serves as a shield. The requirements for a satisfactory monitor for checking c.w. signals are not difficult to satisfy. It should oscillate steadily over the bands on which the station is to be active; the tuning should not be excessively critical, although the degree of bandspread ordinarily considered desirable for receivers is not essential; the shielding should be complete enough to permit the monitor to be placed near the transmitter and still give a good beat note when tuned to the fundamental frequency of the transmitter (this is often impossible with the receiver because the pick-up is too great); and it should be constructed solidly, so that it can be moved around the station without the necessity for retuning while listening to a signal.

The circuit of a simple monitor with bandswitching, covering four amateur bands, is shown in Fig. 1940. Any 1.5- or 2-volt filament triode can be used, as well as any batteries of a size that will fit into the container selected. A plate-tickler switch (S_3) is provided to make the monitor non-oscillating when checking 'phone signals. If desired, a regeneration control could be incorporated (§ 7-4).

Any type of simple detector with a means for picking up a small amount of r.f. from the transmitter can be used as a 'phone monitor. A satisfactory monitor circuit using a simple diode rectifier and an untuned pick-up coil is shown in Fig. 1941-A. Headphones are plugged into the jack for listening checks. The monitor may also be employed as an overmodulation indicator by use of the 0–1 milliammeter, *M*. The pick-up coil is loosely coupled to the tank circuit of the final r.f. amplifier until the milliammeter reads approximately 0.9 ma. The speech amplifier is supplied with a 400-cycle sine-wave tone from an audio oscillator, such as that shown in Fig. 1939, and its gain control turned up. When the monitor meter starts to rise, overmodulation is indicated.

The circuit of Fig. 1941-B indicates the percentage of modulation directly. The a.c. milliammeter is first plugged into the left-hand jack and the pick-up coupling adjusted to give a full-scale meter reading on the unmodulated carrier. Then the meter is plugged into the right-hand jack and the transmitter modulated by a tone or speech signal. The modulation percentage will be 140 times the reading of the meter; e.g., with 100 per cent modulation the meter will read approximately 0.7 ma. When measuring percentage of speech modulation, the inertia of meter will cause it to undershoot on peaks; the swing should, therefore, be limited to somewhat less than 0.7 ma. (*Bib. 7.*)

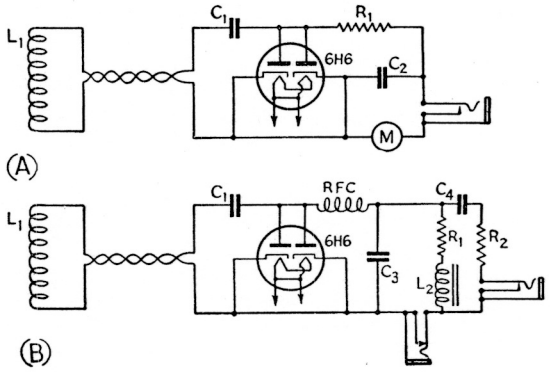

Fig. 1941 — (A) Circuit diagram for a combination 'phone monitor and overmodulation indicator.
C_1 — 0.005-μfd. midget mica.
C_2 — 0.01-μfd. paper.
R_1 — 0.15 megohm, ½-watt.
L_1 — Pick-up coil (enough turns of hook-up wire to give 1 ma. deflection on the meter when the pick-up coil is loosely coupled to the final amplifier tank circuit).
M — 0–1 ma. d.c. milliammeter.

(B) Circuit for a modulation percentage indicator.
C_1, R_1 and L_1 — Same as above.
C_3 — 0.005-μfd. midget mica.
C_4 — 1.0-μfd. paper.
R_2 — 0.25 megohm, ½-watt.
L_2 — 30 to 50 henry iron-core choke.
A 0–1 ma. a.c. milliammeter (d.c. movement with copper-oxide rectifier) also will be required.

¶ Antenna Measurements

Antenna measurements are made for the purpose (a) of securing maximum transfer of power to the antenna from the transmitter, and (b) of adjusting directional antennas to conform with design conditions. Measurements are therefore made of the current (power) in the antenna, voltage and current relationships, resistance, and radiated field intensity. Related to measurements of the antenna proper is the measurement of transmission line characteristics, chiefly involving impedance and resistance.

The instruments described for r.f. measurement (thermocouple ammeter, vacuum-tube voltmeter, L, C and Q meter) all are applicable to antenna measurement.

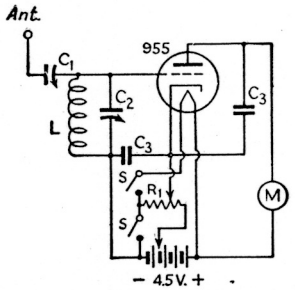

Fig. 1942 — Acorn-tube field-intensity meter for v.h.f.
C_1 — 3–30-$\mu\mu$fd. mica trimmer.
C_2 — 35-$\mu\mu$fd. midget variable.
C_3 — 250-$\mu\mu$fd. midget mica.
R_1 — 1000-ohm potentiometer.
L — 50–80 Mc.: 7 turns No. 14 tinned wire, ½-inch diameter 1 inch long.
25–40 Mc.: 10 turns No. 14 tinned wire, ¾-inch diameter 1 inch long.
12–20 Mc.: 20 turns No. 16 enamel wire, close-wound on ¾-inch diameter tubing.
6–10 Mc.: 37 turns No. 22 enamel wire, close-wound on ¾-inch diameter tubing.
M — 0–200 μa. d.c. microammeter.

Field-intensity meters — In adjusting antenna systems for maximum radiation and in determining radiation patterns, use is made of field-intensity meters. Fundamentally the field-intensity meter is a vacuum-tube voltmeter provided with a tuned input circuit. It is used to indicate the relative intensity of the radiation field under actual *radiating* conditions. It is particularly useful on the very-high frequencies and in adjusting directional antennas. Field-intensity checks should be made at points several wavelengths distant from the antenna and at heights corresponding with the desired angle of radiation.

The absorption frequency meter shown in Figs. 1903–1904 may be used as a field strength meter if it is provided with a pick-up antenna. This can be short length of brass rod or an automotive-type antenna mounted on a stand-off insulator and connected to the stator of the tuning condenser through a small trimmer. The crystal detector is not linear, and a given increase in rectified current does not indicate a directly proportional increase in field strength.

A simple field intensity meter particularly suitable for work in the v.h.f. region is shown in Fig. 1942. Essentially, it consists of an acorn triode operated with very low plate voltage and biased to cut-off, constituting a linear detector. When a signal is tuned in rectification occurs, and the plate-current increment is read on the microammeter. The microammeter scale will read approximately linearly with voltage, a characteristic which is advantageous when making certain types of comparative measurements. Radiated power variations will, of course, be as the square of the field-voltage indication.

A more sensitive field-intensity meter of use in examining the field-strength patterns of lower-frequency antenna systems, employing a diode rectifier and d.c. amplifier in the same envelope, is shown in Fig. 1943. The initial plate current reading is about 1.4 ma.; with signal input, the current dips downward. The scale reading is linear with signal voltage.

Power gain in antenna systems usually is expressed in terms of decibels. A field-intensity meter which reads directly in db. is shown in Fig. 1944. It consists of self-biased linear triode voltmeter followed by a variable-μ d.c. amplifier tube. Because of the logarithmic grid-voltage/plate-current characteristic of this tube, a 0–1 ma. milliammeter in its plate circuit can be calibrated arbitrarily with a linear db. scale, as shown. For extreme accuracy an individual calibration should be made on a.c., but the arbitrary scale shown will be found sufficiently accurate to be useful.

The scale covers approximately 25 db. and is linear over a range of about 20 db. At very small signals it departs from linearity, and therefore 0 db. is placed at 90 per cent of the scale. A variable meter shunt compensates for variations in tubes and battery voltages. In use, the balancing resistor is adjusted to give a full-scale reading of 1 ma. The signal pick-up is then made such as to cause the meter to indi-

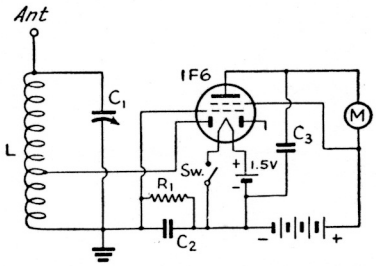

Fig. 1943 — Sensitive diode-triode field-intensity meter.
C_1 — 50-$\mu\mu$fd. midget variable.
C_2 — 250-$\mu\mu$fd. midget mica.
C_3 — 0.002-μfd. midget mica.
R_1 — 1 megohm, ½-watt.
L — 1.5– Mc.: 58 turns No. 28 d.s.c., close-wound.
3–6 Mc.: 29 turns No. 20 e., close-wound.
6–12 Mc.: 15 turns No. 20 e., spaced.
11–22 Mc.: 8 turns No. 20 e., spaced.
20–40 Mc.: 4 turns No. 20 e., spaced.
All wound on 1½-inch coil forms, winding length 1½ inches; diode tap in center of coil.
M — 0–500 μa. d.c. microammeter.

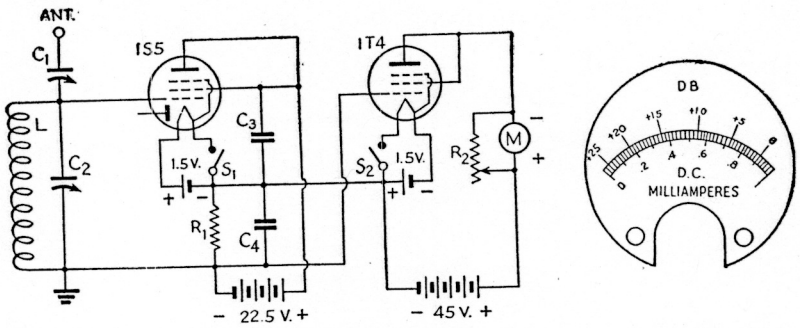

Fig. 1944 — A logarithmic field-intensity meter with db. calibration, employing a variable-μ d.c. amplifier tube.

C_1 — 3–30-$\mu\mu$fd. mica trimmer.
C_2 — 50-$\mu\mu$fd. midget variable.
C_3, C_4 — 500-$\mu\mu$fd. midget mica.
R_1 — 10 megohms, ½-watt.
R_2 — 1000-ohm wire-wound.
S_1, S_2 — Toggle switches or d.p.s.t.
L — See coil data under Figs. 1942 and 1943.
M — 0–1 ma. d.c. millammeter.

cate 0 db. Alternatively, the initial reading may be set arbitrarily at 10 db.; adjustments will then be indicated as losses or gains in relation to that figure.

The range may be extended to +45 db. by inserting a 2-point tap switch in the lead to the 1T4 amplifier from the self-biasing resistor R_1 and tapping that resistor at 1 megohm to provide a 10-to-1 multiplier. Add 20 db. to all readings when the multiplier is used.

Tube Characteristics

The best check on a receiving or transmitting tube is by a direct comparison in its own socket with a new tube of known quality under actual operating conditions. Any other test falls short of an actual performance test.

For convenience, however, an auxiliary tube checker is desirable. A number of commercial tube checkers of the type used by servicemen are on the market. In purchasing one, the following qualifications should be sought: (1) complete facilities for checking shorts between any pair of electrodes; (2) a transconductance rather than an "emission" test (the emission of a tube may vary widely with no effect on its performance, while genuinely faulty tubes may show rated emission); (3) provision for checking plate and screen currents under typical conditions (at rated voltages); (4) gas and noise tests.

The construction of a comprehensive tube-checker is an elaborate project. However, for an occasional need the amateur can assemble a circuit using an existing power source in accordance with Fig. 1945 to make a reasonably accurate standard transconductance test. A pentode tube is shown; for other types omit or add electrode connections as required. The voltages applied should correspond with those listed under "Typical Operating Conditions" in the tables of Chapter Twenty-One. They should be accurate to within 5 per cent (especially grid voltage, plate voltage for triodes and screen voltage for pentodes). With the switch in No. 2 position, the plate and screen currents should be near the rated values; wide variations from normal indicate a defective tube.

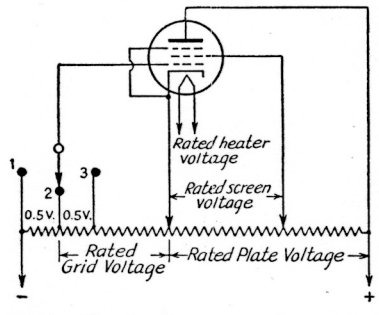

Fig. 1945 — Circuit for measuring vacuum-tube transconductance, used for checking condition of tubes.

To make the transconductance test, note the plate current with the grid switch alternately on positions 3 and 1, which changes the bias from exactly 0.5 volt less than rated bias to exactly 0.5 volt more. The resulting plate current change multiplied by 1000 equals the transconductance in micromhos. This value should be checked against the tables. Tubes usually will operate satisfactorily until the transconductance falls to 70 per cent of rating.

Pentagrid and heptode frequency converters can be checked by this method if the rated d.c. electrode voltages are applied. The oscillator section can be checked separately by noting the oscillator-anode current change.

Diodes can be checked by applying 50 volts of 60-cycle a.c. between plate and cathode, in series with a 0.25-megohm load shunted by a 2-μfd. condenser, and reading the rectified current on a 0–1 ma. d.c. meter. A reading of 0.2 to 0.25 ma. indicates a satisfactory tube.

BIBLIOGRAPHY

[1] Grammer, *QST*, July, 1941, "A Sensitive Absorption Wavemeter."
[2] Grammer, *QST*, October, 1941, "A Lecher Wire System for U. H. Frequency Measurement."
[3] Goodman, *QST*, September, 1941, "A 50-, 100- and 1000-Kc. Oscillator for Band-Edge Spotting."
[4] Bradley, *QST*, October, 1942, "A Neon-Tube Parts Checker."
[5] Greek, *QST*, October, 1940, "A Complete Oscilloscope Using the 902."
[6] Stafford, *QST*, January, 1940, "Q Measurements."
[7] Poor, *QST*, June, 1940, "A Simple Modulation Monitor and Percentage Indicator."

CHAPTER TWENTY

Workshop Practice

In contrast to the earlier days of amateur radio, when many components were obtainable only at prohibitive prices or not at all, the construction of a piece of equipment these days resolves itself chiefly into the proper assembly and wiring of manufactured components from the wide assortment available.

Tools

While an easier, and perhaps a better, job can be done with a greater variety of tools available, by taking a little thought and care it is possible to turn out a fine piece of equipment with only a few of the common hand tools. A list of tools which will be found indispensable in the construction of radio equipment will be found on the next page. With these tools it should be possible to perform any of the required operations in preparing panels and metal chassis for assembly and wiring. A few additional tools will make certain operations easier, so it is a good idea for the amateur who does constructional work at intervals to add to his supply of tools from time to time. The following list will be found helpful in making a selection:

Bench vise, 4-inch jaws.
Tin shears, 10-inch, for cutting thin sheet metal.
Taper reamer, ½-inch, for enlarging small holes.
Taper reamer, 1-inch, for enlarging holes.
Countersink for brace.
Carpenter's plane, 8- to 12-inch, for woodworking.
Carpenter's saw, cross-cut.
Motor-driven emery wheel for grinding.
Long-shank screwdriver with screw-holding clip for tight places.
Set of "Spintite" socket wrenches for hex nuts.
Set of small, flat, open-end wrenches for hex nuts.
Wood chisel, ½-inch.
Cold chisel, ½-inch.
Wing dividers, 8-inch, for scribing circles.
Set of machine-screw taps and dies.
Folding rule, 6-foot.
Dusting brush.

Several of the pieces of light woodworking machinery, often sold in hardware stores and mail-order retail stores, are ideal for amateur radio work, especially the drill press, grinding head, band and circular saws, and joiner. Although not essential, they are desirable for anyone in a position to acquire them.

Care of Tools

The proper care of tools is not alone a matter of pride to a good workman. He also realizes the energy which may be saved and the annoyance which may be avoided by the possession of well-kept, sharp-edged tools. A few minutes spent with the oil stone or emery wheel now and then will maintain the fine cutting edges of knives, drills, chisels, etc.

Drills should be sharpened at frequent intervals so that grinding is kept at a minimum each time. This makes it easier to maintain the rather critical surface angles required for best cutting with least wear. Occasional oil-stoning of the cutting edges of a drill or reamer will extend the time between grindings. Stoned cutting edges also will stand more feed and speed.

The soldering iron can be kept in good condition by keeping the tip well tinned with solder and not allowing it to run at full voltage for long periods when it is not being used. After each period of use, the tip should be removed and cleaned of any scale which may have accumulated. An oxidized tip may be cleaned by dipping it in sal ammoniac while hot and then wiping it clean with a rag. If the tip becomes pitted, it should be filed until smooth and bright, and then tinned by dipping it in solder.

All tools should be wiped occasionally with an oily cloth to prevent rust.

INDISPENSABLE TOOLS

Long-nose pliers, 6-inch.
Diagonal cutting pliers, 6-inch.
Screwdriver, 6- to 7-inch, ¼-inch blade.
Screwdriver, 4- to 5-inch, ⅛-inch blade.
Scratch awl or scriber for marking lines.
Combination square, 12-inch, for laying out work.
Hand drill, ¼-inch chuck or larger, 2-speed type preferable.
Electric soldering iron, 100 watts.
Hacksaw, 12-inch blades.
Center punch for marking hole centers.
Hammer, ball peen, 1-lb. head.
Heavy knife.
Yardstick or other straight-edge.
Carpenter's brace with adjustable hole cutter or socket-hole punches (see text).
Pair of small C-clamps for holding work.
Large, coarse, flat file.
Large round or rat-tail file, ½-inch diameter.
Three or four small and medium files—flat, round, half-round, triangular.
Drills, particularly ¼-inch and Nos. 18, 28, 33, 42 and 50.
Combination oil stone for sharpening tools.
Solder and soldering paste (non-corroding).
Medium-weight machine oil.

Useful Materials

Small stocks of various miscellaneous materials will be required in constructing radio apparatus, most of which are available from hardware or radio supply stores. A representative list follows:

½-inch by 1/16-inch brass strip for brackets, etc. (half-hard for bending).

¼-inch square brass rod or ½ × ½ × 1/16-inch angle brass for corner joints.

¼-inch diameter round brass rod for shaft extensions.

Machine screws: Round-head and flat-head, with nuts to fit. Most useful sizes: 4–36, 6–32 and 8–32, in lengths from ¼-inch to 1½-inch. (Nickel-plated iron will be found satisfactory except in strong r.f. fields, where brass should be used.)

Bakelite and hard rubber scraps.

Soldering lugs, panel bearings, rubber grommets, terminal-lug wiring strips, varnished-cambric insulating tubing.

Machine screws, nuts, washers, soldering lugs, etc., are most reasonably purchased in quantities of a gross.

Chassis Construction

With a few essential tools and proper procedure, it will be found that building radio gear on a metal chassis is no more of a chore than building with wood, and a more satisfactory job results.

The placing of components on the chassis is shown quite clearly in the photographs in this *Handbook*. Aside from certain essential dimensions, which usually are given in the text, exact duplication is not necessary.

Much trouble and energy can be saved by spending sufficient time in planning the job. When all details are worked out beforehand the actual construction is greatly simplified.

Cover the top of the chassis with a piece of wrapping paper or, preferably, cross-section paper, folding the edges down over the sides of the chassis and fastening with adhesive tape. Then assemble the parts to be mounted on top of the chassis and move them about until a satisfactory arrangement has been found, keeping in mind any parts which are to be mounted underneath, so that interferences in mounting may be avoided. Place condensers and other parts with shafts extending through the panel first, and arrange them so that the controls will form the desired pattern on the panel. Be sure to line up the shafts squarely with the chassis front. Locate any partition shields and panel brackets next, and then the tube sockets and any other parts, marking the mounting-hole centers of each accurately on the paper. Watch out for condensers whose shafts do not line up with the mounting holes. Do not forget to mark the centers of socket holes and holes for leads under i.f. transformers, etc., as well as holes for wiring leads.

NUMBERED DRILL SIZES

Number	*Diameter (mils)*	*Will Clear Screw*	*Drilled for Tapping Iron, Steel or Brass**
1	228.0	—	—
2	221.0	12–24	—
3	213.0	—	14–24
4	209.0	12–20	—
5	205.0	—	—
6	204.0	—	—
7	201.0	—	—
8	199.0	—	—
9	196.0	—	—
10	193.5	10–32	—
11	191.0	10–24	—
12	189.0	—	—
13	185.0	—	—
14	182.0	—	—
15	180.0	—	—
16	177.0	—	12–24
17	173.0	—	—
18	**169.5**	**8–32**	—
19	166.0	—	12–20
20	161.0	—	—
21	159.0	—	10–32
22	157.0	—	—
23	154.0	—	—
24	152.0	—	—
25	149.5	—	10–24
26	147.0	—	—
27	144.0	—	—
28	**140.0**	**6–32**	—
29	**136.0**	—	**8–32**
30	128.5	—	—
31	120.0	—	—
32	116.0	—	—
33	**113.0**	**4–36 4–40**	—
34	111.0	—	—
35	**110.0**	—	**6–32**
36	106.5	—	—
37	104.0	—	—
38	101.5	—	—
39	099.5	3–48	—
40	098.0	—	—
41	096.0	—	—
42	**093.5**	—	**4–36 4–40**
43	089.0	2–56	—
44	086.0	—	—
45	082.0	—	3–48
46	081.0	—	—
47	078.5	—	—
48	076.0	—	—
49	073.0	—	2–46
50	**070.0**	—	—
51	067.0	—	—
52	063.5	—	—
53	059.5	—	—
54	055.0	—	—

*Use one size larger for tapping bakelite and hard rubber.

By means of the square, lines indicating accurately the centers of shafts should be extended to the front of the chassis and marked on the panel at the chassis line, the panel being fastened on temporarily. The hole centers may then be punched in the chassis with the center punch. After drilling, the parts which require mounting underneath may be located and the mounting holes drilled, making sure by trial that no interferences exist with parts mounted on top. Mounting holes along the front edge of the chassis should be transferred to the panel, by once again fastening the panel to the chassis and marking it from the rear.

Next, mount on the chassis the condensers and any other parts with shafts extending to the panel, and measure accurately the height

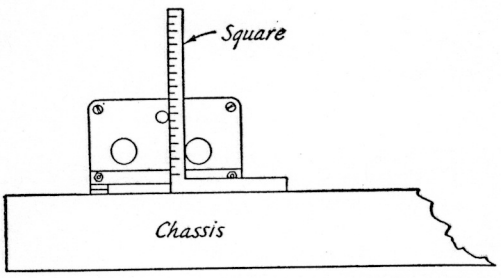

Fig. 2001 — Method of measuring the heights of condenser shafts, etc. If the square is adjustable, the end of the scale should be set flush with the face of the head.

of the center of each shaft above the chassis, as illustrated in Fig. 2001. The horizontal displacement of shafts having already been marked on the chassis line on the panel, the vertical displacement can be measured from this line. The shaft centers may now be marked on the back of the panel, and the holes drilled. Holes for any other panel equipment coming above the chassis line may then be marked and drilled, and the remainder of the apparatus mounted.

¶ Drilling and Cutting Holes

When drilling holes in metal with a hand drill it is important that the centers first be located with a center punch, so that the drill point will not "walk" away from the center when starting the hole. Care should be taken not to use too much pressure with small drills, which bend or break easily. Whenever the drill starts to break through, special care must be used. Often it is an advantage to shift a two-speed drill to low gear at this point. Holes more than ¼-inch in diameter may be started with a smaller drill and reamed out with the larger drill.

The chuck on the usual type of hand drill is limited to ¼-inch drills. Although it is rather tedious, the ¼-inch hole may be filed out to larger diameters with round files. Another method possible with limited tools is to drill a series of small holes with the hand drill along the inside of the diameter of the large hole, placing the holes as close together as possible. The center may then be knocked out with a cold chisel and the edges smoothed up with a file. Taper reamers which fit into the carpenter's brace will make the job easier. A large rat-tail file clamped in the brace makes a very good reamer for holes up to the diameter of the file, if the file is revolved counter-clockwise.

For socket holes and other large round holes, an adjustable cutter designed for the purpose may be used in the brace. The cutter should be kept well-sharpened. Occasional application of machine oil in the cutting groove will help. The cutter first should be tried out on a block of wood, to make sure that it is set for the correct diameter. Probably the most convenient device for cutting socket holes is the socket-hole punch. The best type is that which works by turning a take-up screw with a wrench.

Square or rectangular holes may be cut out by making a row of small holes as previously described, but is more easily done by drilling a ½-inch hole inside each corner, as illustrated in Fig. 2002, and using these holes for starting and turning the hacksaw. The socket-hole punch also may be of considerable assistance in cutting out large rectangular openings.

The burrs or rough edges which usually result after drilling or cutting holes may be removed with a file, or sometimes more conveniently with a sharp knife or chisel. It is a good idea to keep an old wood chisel sharpened and available for this purpose.

¶ Cutting Threads

Brass rod may be threaded, or the damaged threads of a screw repaired, by the use of *dies*. Holes of suitable size (see drill chart) may be threaded for screws by means of *taps*. Taps and dies are obtainable in all standard machine-screw sizes. A set usually consists of taps and dies for 4–36, 6–32, 8–32, 10–32 and 14–20 sizes, with a holder suitable for use with either tap or die. The die may be started easily by first filing a sharp taper or bevel on the end of the rod. In tapping a hole, extreme care should be used to prevent breaking the tap. The tap should be kept at right angles to the surface of the material, and rotation should be reversed a revolution or two whenever the tap begins to turn hard. With care, holes can be tapped rapidly by clamping the tap in the chuck of the hand drill and using slow speed. Machine oil applied to the tap usually makes cutting easier and sticking less troublesome.

¶ Cutting and Bending Sheet Metal

If a sheet of metal is too large to be cut conveniently with a hacksaw, it may be marked with scratches as deep as possible along the line of the cut on both sides of the sheet and then clamped in a vise and worked back and forth until the sheet breaks at the line. Do not carry the bending so far that the break

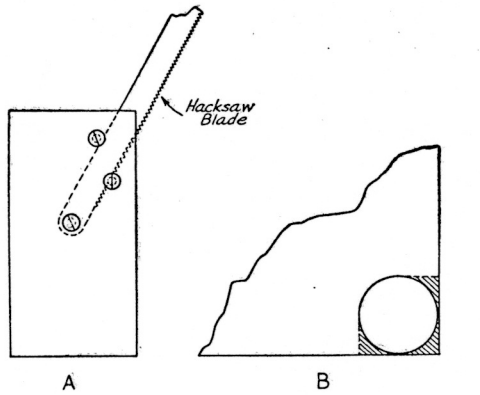

Fig. 2002 — To cut rectangular holes in a chassis, corner holes may be filed out as shown in the shaded portion of B, making it possible to start the hacksaw blade along the cutting line. A shows how a single-ended handle may be constructed for a hacksaw blade.

begins to weaken; otherwise the edge of the sheet may become bent. A pair of iron bars or pieces of heavy angle stock, as long or longer than the width of the sheet, to hold it in the vise will make the job easier. C-clamps may be used to keep the bars from spreading at the ends. The rough edges may be smoothed up with a file or by placing a large piece of emery cloth or sandpaper on a flat surface and running the edge of the metal back and forth over the sheet.

Bends may be made similarly. The sheet should be scratched on both sides, but not so deeply as to cause it to break.

¶ Cleaning and Finishing Metal

Parts made of aluminum can be cleaned up and given a satin finish, after all holes have been drilled, by placing them in a solution of lye for one-half to three-quarters of an hour. Three or four tablespoonfuls of lye should be used to each gallon of water. If more than one piece is treated in the same bath, each piece should be separated from the others so as to expose all surfaces to the solution. Overlapping of pieces may result in spots or stains.

¶ Crackle Finish

Wood or metal parts can be given a crackle finish by applying one coat of clear Duco or Tri-Seal and allowing it to dry over night. A coat of Kem-Art Metal Finish is then sprayed or applied thickly with a brush, taking care that the brush marks do not show. This should be allowed to dry for two or three hours and the part should then be baked in the kitchen oven at 225° for one and one-half hours. This will produce a regular commercial job. This finish, which comes in several different colors, is produced by the Sherwin-Williams Paint Co., and should be obtainable through any dealer handling Sherwin-Williams products.

¶ Hook-Up Wire

A popular type of wire for receivers and low-power transmitters is that known as "push back" wire. It comes in sizes No. 16, 18, 20, etc., which is sufficiently large for all power circuits except filament. The insulating covering, which is sufficient for circuits where voltages do not exceed 400 or 500, can be pushed back a few inches at the end, making cutting of the insulation unnecessary when making a connection. Filament wiring should be done with sufficiently large conductors to carry the required current without appreciable voltage drop (see Copper Wire Table, Chapter Twenty-One). Rubber-covered house-wire sizes No. 14 to No. 10 are suitable for heavy-current transmitting tubes, while No. 18 to No. 14 flexible wire is satisfactory for receivers and low-drain transmitting tubes where the total length of the leads is not excessive.

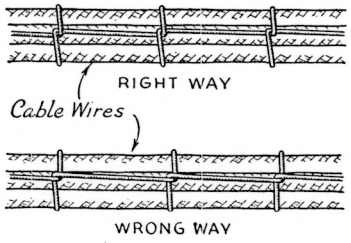

Fig. 2003 — Right and wrong methods of lacing cable. With the right way the leading line is pinched under each turn and will not loosen if a break occurs in the lacing.

Stiff bare wire, sometimes called *bus wire* or *bus bar*, is most favored for the high r.f.-potential wiring of transmitters and, where practicable, in receivers. It comes in sizes No. 14 and No. 12 and is usually tin-dipped. Soft-drawn antenna wire also may be used. Kinks or bends can be removed by stretching 10 or 15 feet of the wire and then cutting it into small usable lengths.

The insulation covering power wiring which is to carry high transmitter voltages should be appropriate for the voltage involved. Wire with rubber and varnished cambric covering, similar to ignition cable, is available from radio parts dealers. The smaller sizes have sufficient insulation to be safe at 1000 to 1500 volts, while the more heavily insulated types should be used for voltages above 1500.

¶ Wiring Transmitters and Receivers

It is usually advisable to do the power-supply wiring first. The leads should be bunched together as much as possible and kept down close to the surface of the chassis. The lacing of power wiring in cable form not only improves its appearance but also strengthens the wiring. Fig. 2003 shows the correct way of lacing cabled wires. When done correctly the leading line is held tightly pinched in place after tension has been removed, and therefore does not loosen readily. When the wrong method is used the turns will loosen up as soon as tension is removed.

Chassis holes for wires should be lined with *rubber grommets* which fit the hole, to prevent chafing of the insulation. In cases where power-supply leads have several branches, it is often convenient to use fibre *terminal strips* as anchorages. These strips also form handy mountings for wire-terminal resistors, etc. When any particular unit is provided with a nut or thumb-screw terminal, soldering-lug wire terminals to fit are useful.

High-potential r.f. wiring should be well spaced from the chassis or other grounded metal surfaces and should be run as directly as possible between the points to be connected, without fancy bends. When wiring balanced or push-pull circuits, care should be taken to make the r.f. wiring on each side of the circuit as symmetrical as possible. Where it is necessary to pass r.f. wiring through the chassis, either a *feed-through* insulator of low-loss material should be used or the hole in the chassis should be of sufficient size to provide plenty of

air space around the wire. Large-diameter rubber grommets can be used to prevent accidental short-circuits to the chassis.

By-pass condensers should be connected directly to the point to be by-passed and grounded immediately at the nearest available mounting screw, making certain that the screw makes good electrical contact with the chassis. Care should be taken to connect the marked side of tubular paper by-pass condensers to ground. Blocking and coupling condensers should be well spaced from the chassis.

High-voltage wiring should have exposed points kept at a minimum and those which cannot be avoided rendered as inaccessible as possible to accidental contact.

¶ Soldering

The secret of good soldering is in allowing time for the *joint*, as well as the solder, to attain sufficient temperature. Enough heat should be applied so that the solder will melt when it comes in contact with the wires being joined, without touching the solder to the iron.

Wartime solder, which has a much smaller ratio of tin to lead, requires considerably more heat, and it becomes especially important to keep the iron clean at all times. More care must be exercised in making the joint because the new solder does not flow as readily, and also has a tendency to crystallize.

Soldering paste, if of the non-corroding type, is extremely helpful when used correctly. In general, it should not be used for radio work except when necessary. The joint should first be warmed slightly and the soldering paste applied with a piece of wire. Only the bit of paste which melts from the warmth of the joint should be used. If the soldering iron is clean it will be possible with one hand to pick up a drop of solder on the tip of the iron which can be applied to the joint, while the other hand is used to hold the connecting wires together. The use of excessive soldering paste causes the paste to spread over the surface of adjacent insulation, causing leakage or breakdown of the insulation. Except where absolutely necessary, solder should never be depended upon for the mechanical strength of the joint; the wire should be wrapped around the terminals or clamped with soldering terminals.

Do not attempt to make ground connections to a cadmium-plated chassis by soldering to the surface of the chassis, since the plating may be loosened by the heat and later fall off, breaking the connection. Drill a hole in the chassis and solder the wire in the hole.

¶ Construction Notes

Lockwashers should be used under nuts to prevent loosening with use, particularly when mounting tube sockets or plug-in coil receptacles subject to frequent strain.

If a control shaft must be extended or insulated, a flexible shaft coupling with adequate insulation should be used. Satisfactory support for the shaft extension can be provided by means of a *metal* panel bearing made for the purpose. Never use panel bearings of the non-metal type unless the condenser shaft is grounded. *The metal bearing should be connected to the chassis with a wire or grounding strip.* This prevents any possible danger of shock.

The standard way of mounting toggle switches is with the switch "On" when the lever is in the upward position.

¶ Coil Winding

Dimensions for coils for the various units described in the constructional chapters are given under the circuit diagrams. Where no wire size is given, the power is sufficiently low to permit use of any available size within reason.

Unless a close-wound winding is definitely specified, the number of turns indicated should be spaced out to fill the specified length on the form. The length should be marked on the form and holes drilled opposite the pins to which the ends of the winding are to connect. Scrape one end of the wire and pass it through the lower hole in the form to the pin to which the bottom end of the winding is to connect, and solder this end fast. Unroll a length of wire approximately sufficient for the winding, and clamp the spool in a vise so it will not turn. The wire should be pulled out straight and the winding started by turning the form in the hands and walking toward the vise. A fair tension should be kept on the wire at all times. The spacing can be judged by eye. If, as the winding progresses, it becomes evident that the spacing is going to be incorrect to fill the required length, the winding can be started over again with a different spacing. If the spacing is only slightly off, the winding may be finished, the top end fastened, and the spacing corrected by pushing each turn. When complete, the turns should be fastened in place with coil cement. After a little practice, the job of determining the correct spacing will not be difficult.

Sometimes it is necessary to adjust the number of turns on a coil experimentally. The easiest way to do this is to bring a wire up from one of the pins, extending it through a hole in the form for a half-inch or so. The end of the winding may then be soldered to this extension rather than to the pin itself, and the nuisance of repeatedly fishing the wire through the pin avoided until the correct size of the winding has been determined.

¶ Coil Cement

Duco cement, obtainable universally at hardware, stationery or 5-and-10-cent stores, is satisfactory for fastening coil turns. For small coils, a better-looking job will result if it is thinned out with acetone (amyl acetate), sometimes referred to as banana oil. If desired, the solution may be made thin enough to permit application with a brush.

Special low-loss coil "dopes" are available, including some with a polystyrene base.

CHAPTER TWENTY-ONE

Tube Characteristics and Miscellaneous Data

THIS chapter contains a compilation of miscellaneous data useful to the practising radio amateur. The first part contains reference information intended to illustrate and supplement the basic material in the remainder of this *Handbook*. The larger part of the chapter is devoted to data on different types of receiving and transmitting tubes.

Inductance and Capacity

Inductance (L) — The formula for computing the inductance of air-core coils is:

$$L = \frac{0.2\ a^2n^2}{3a + 9b + 10c}\ \mu\text{h.}$$

where a is the mean diameter of the coil in inches, b is the length of the winding in inches, c is the radial depth of the winding in inches, and n is the number of turns. The quantity c may be neglected if the coil is a single-layer solenoid.

For example, assume a coil having 35 turns of No. 30 d.s.c. wire on a form 1.5 inches in diameter. Consulting the wire table (page 427), 35 turns of No. 30 d.s.c. will occupy 0.5 inch. Therefore, $a = 1.5$, $b = 0.5$, $n = 35$, and

$$L = \frac{0.2 \times (1.5)^2 \times (35)^2}{(3 \times 1.5) + (9 \times 0.5)} = 61.25\ \mu\text{h.}$$

To calculate the number of turns of a single-layer coil for a required value of inductance:

$$N = \sqrt{\frac{3a + 9b}{0.2a^2} \times L}$$

More rapid and convenient calculations in designing coils can be made with the ARRL *Lightning Radio Calculator* (Type A).

Condenser capacity (C) — The formula for determining the capacitance of a condenser is:

$$C = 0.2235\ \frac{KA}{d}\ (n - 1)\ \mu\mu\text{fd.}$$

where A is the area of one side of one plate in square inches, n is the total number of plates, d is the separation between plates in inches, and K is the dielectric constant (= 1 for air; see the table on page 423 for values for other materials).

The dielectric constant is the ratio of the capacitance of a condenser with a given dielectric to its capacitance with air dielectric.

Linear Circuits

At very-high and ultrahigh frequencies transmission lines are used as linear resonant circuits. The following formulas cover the design of such circuits. All dimensions are in inches.

Characteristic impedance — The characteristic or surge impedance, Z_o, of various types of transmission lines may be computed as follows:

Single conductor to perfect ground:

$$Z_o = 138 \log \frac{2D}{a}$$

where D is the height of the conductor above ground and a is the radius of the conductor.

Concentric or coaxial conductor:

$$Z_o = \frac{138}{\sqrt{K}} \log \frac{b}{a}$$

where b is the *inside* radius of the outer conductor, a is the *outside* radius of the inner conductor and K is the dielectric constant (= 1 for air; see table for values for other materials).

When the dielectric consists of spaced insulating washers or beads with air between, a corrected value for K (K') must be used:

$$K' = \frac{K - 1}{s}\ w$$

where K is the dielectric constant of the spacer material, s is the distance between adjacent spacers, and w is the width of one spacer.

For concentric lines with square or trough-type outer conductors, the value for b is taken as the height of one side × 1.079.

Parallel conductors:

$$Z_o = 276 \log \frac{D}{a}$$

where D is the center-to-center spacing between conductors and a is the radius of the conductors.

Parallel conductors in a concentric shield:

$$Z_o = \frac{276}{\sqrt{K}} \log \left[\frac{D}{a} \text{X} \frac{1 - \left(\frac{D}{2b}\right)^2}{1 + \left(\frac{D}{2b}\right)^2} \right]$$

where K, D, b and a are the same as above.

Inductance, capacity and resistance — The capacity, inductance and resistance of transmission lines are linear functions, and are computed in terms of unit length. Except as noted, the symbols are the same as before.

Concentric and coaxial conductors:

$$L = 0.14 \log \frac{b}{a} \ \mu\text{h./ft.}$$

$$C = \frac{7.35}{\log \frac{b}{a}} \ \mu\mu\text{fd./ft.}$$

$$R = \frac{\sqrt{f}}{2a} \ \text{microhms/ft.}$$

where f is the operating frequency in cycles.

Parallel conductors:

$$L = 0.279 \log \frac{D}{a} \ \mu\text{h./ft.}$$

$$C = \frac{3.66}{\log \frac{D}{a}} \ \mu\mu\text{fd./ft.}$$

$$R = \frac{\sqrt{f}}{a} \ \text{microhms/ft.}$$

Reactance, resonant impedance and Q — For lines less than one-quarter of a wavelength long at the operating frequency,

$$X_L = Z_o \tan \frac{360^\circ\, l}{\lambda}$$

where l is the length of the line and λ is one wavelength at the operating frequency (both measured in the same units).

To tune such a line to resonance, capacitive reactance equal to the inductive reactance must be connected across the line. The capacity required to tune a given line to resonance is

$$C = \frac{1}{Z_o \tan \frac{360^\circ\, l}{\lambda}}$$

The parallel-resonant or input (sending-end) impedance of the line is

$$Z_s = \frac{X_L^2}{R} = \frac{L}{RC} = X_L Q$$

For high parallel-resonant impedance (maximum gain), the b/a or D/a ratio should be made between 6 and 12.

The Q of a resonant line is

$$Q = \frac{2\pi f L}{R} = \frac{1}{R}\sqrt{\frac{L}{C}}$$

For high Q (maximum selectivity) the b/a or D/a ratio should be made between 2.5 and 5. Where the conductor spacing is within these limits,

$$Q = 0.22\, b\sqrt{f}$$

as an approximation within ± 10 per cent.

Table of Dielectric Constants

Dielectric	*K*	*Power factor* [1]	*Puncture voltage* [2]
Air (normal pressure)	1.0	—	19.8–22.8
Amber	2.0	0.2–0.5	—
Asphalts	2.7–3.1	2.3 [3]	25–30
Bakelite — *See* Phenol			
Beeswax	2.9–3.2	—	—
Casein plastics [4]	6.1–6.4	5.2–6	165
Castor oil	4.3–4.7	7	380
Celluloid	4–16	5–10	—
Cellulose acetate [5]	6–8	3–6	300–800
Cellulose nitrate [6]	4–7	2.8–5	300
Ceresin wax	2.5–2.6	0.12–0.21	—
Enamel (wire covering)	—	—	500–750
Fibre	5–7.5	4.5–5	150–180
Glass:			
Cobalt	7.3	0.7	—
Common window	7.6–8	1.4	200–250
Crown	6.2–7	1 [3]	500
Electrical	4–5	0.5	2000
Flint	7–10	0.4	—
Nonex	4.2	0.25	—
Photographic	7.5	0.8–1	—
Plate	6.8–7.6	0.6–0.8	—
Pyrex	4.5	0.7	335
Gutta percha	2.5–4.9	—	200–500
Lucite [7]	2.5–3	1.5–3	500
Mica	2.5–8	1–6	—
Mica (clear India)	6.4–7.3	1–2	600–1500
Mycalex	6–8	0.2–0.3	250
Nylon	3.6	2.2	—
Paper	2.0–2.6	—	1250
Paraffin wax (solid)	1.9–2.6	0.1–0.3	300
Phenol: [8]			
Pure	5	1	400–475
Asbestos base	7.5	15	90–150
Black molded	5–5.5	3.5	400–500
Fabric base	5–6.5	3.5–11	150–500
Mica-filled	5–6	0.8–1	475–600
Paper base	3.8–5.5	2.5–4	650–750
Yellow	5.3–5.4	0.36–0.7	500
Polystyrene [9]	2.4–2.9	0.02	500
Porcelain (dry process)	6.2–7.5	0.7–15	40–100
Porcelain (wet process)	6.5–7	0.6	150
Pressboard (untreated)	2.9–4.5	—	125–300
Pressboard (oiled)	5	—	750
Quartz (fused)	4.2–5.1	0.015–0.03	200
Rubber (hard) [10]	2–3.5	0.5–1	450
Shellac	2.5–4	0.09	900
Steatite [11]	6.1	0.06–0.2	150–315
Titanium dioxide [12]	90–170	0.1	—
Urea formaldehyde [13]	5–7	2–4	300–400
Varnished cloth [14]	2–2.5	2–3	440–550
Vinyl resins	4	1.4–1.7	400–500
Vitrolex	6.4	0.3	—
Wood (dry oak)	2.5–6.8	3.85	—
Wood (paraffined maple)	4.1	—	115

[1] At 1 Mc.

[2] In kilovolts per inch. Most data applies to relatively thin sections and cannot be multiplied directly to give breakdown for thicker sections without added safety factor.

[3] At 1 kc.

[4] Includes such products as Aladdinite, Ameroid, Galalith, Erinoid, Lactoid, etc.

[5] Includes Fibestas, Lumerith, Nixonite, Plastacele, Tenite, etc.

[6] Includes Amerith, Nitron, Nixonoid, Pyralin, etc.

[7] Methylmethacrylate resin.

[8] Phenolaldehyde products include Acrolite, Bakelite, Catalin, Celeron, Dielecto, Durez, Durite, Formica, Gemstone, Heresite, Indur, Makalot, Marblette, Micarta, Opalon, Prystal, Resinox, Synthane, Textolite, etc. Yellow bakelite is so-called "low-loss" bakelite.

[9] Includes Amphenol 912A, Distrene, Intelin IN 45, Loalin, Lustron, QuartzQ, Rezoglas, Rhodolene M, Ronilla L, Styraflex, Styron, Trolitul, Victron, etc.

[10] Also known as Ebonite.

[11] Soapstone — Alberene, Alsimag, Isolantite, Lava, etc.

[12] Rutile. Used in low temperature-coefficient fixed condensers.

[13] Includes Aldur, Beetle, Plaskon, Pollopas, Prystal, etc.

[14] Includes Empire cloth.

INDUCTANCE, CAPACITY AND FREQUENCY — CHART I, 1.5–30 MC.

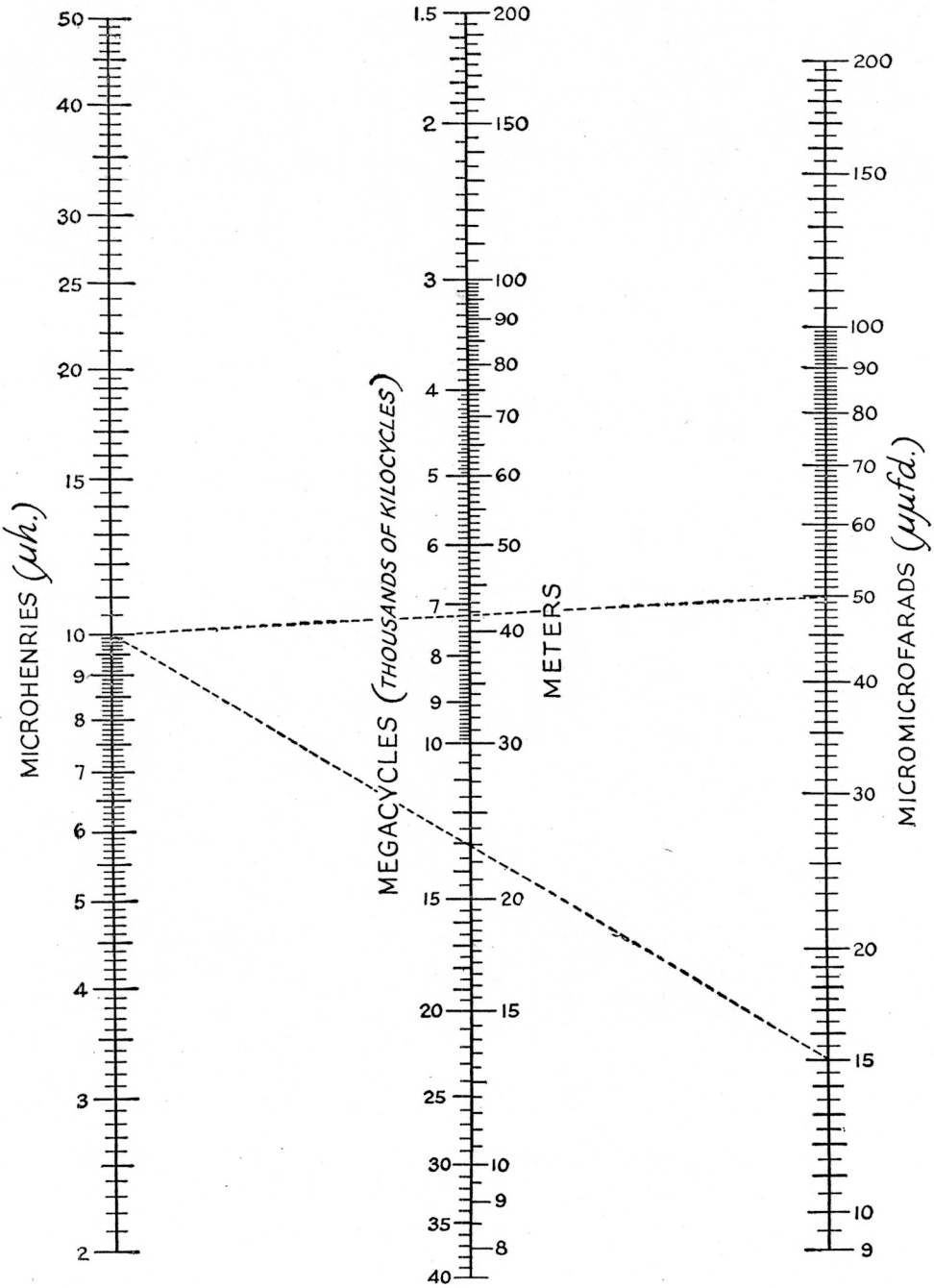

This chart may be used to find the values of inductance and capacity required to resonate at any given frequency in the medium- or high-frequency ranges; or, conversely, to find the frequency to which any given coil-condenser combination will tune. In the example shown by the dashed lines, a condenser has a minimum capacity of 15 μμfd and a maximum capacity of 50 μμfd. If it is to be used with a coil of 10-μh. inductance, what frequency range will be covered? The straight-edge is connected between 10 on the left-hand scale and 15 on the right, giving 13 Mc. as the high-frequency limit. Keeping the straight-edge at 10 on the left-hand scale, the other end is swung to 50 on the right-hand scale, giving a low-frequency limit of 7.1 Mc. The tuning range would, therefore, be from 7.1 Mc. to 13 Mc., or 7100 kc. to 13,000 kc. The center scale also serves to convert frequency to wavelength.

The range of the chart can be extended by multiplying each of the scales by 0.1 or 10. In the example above, if the capacities are 150 and 500 μμfd. and the inductance 100 μh., the range becomes approximately 231 to 422 meters or 0.7 to 1.3 Mc. Alternatively, 1.5 to 5 μμfd. and 1 μh. will give a range of approximately 71 to 130 Mc.

INDUCTANCE, CAPACITY AND FREQUENCY — CHART II, 30–300 MC.

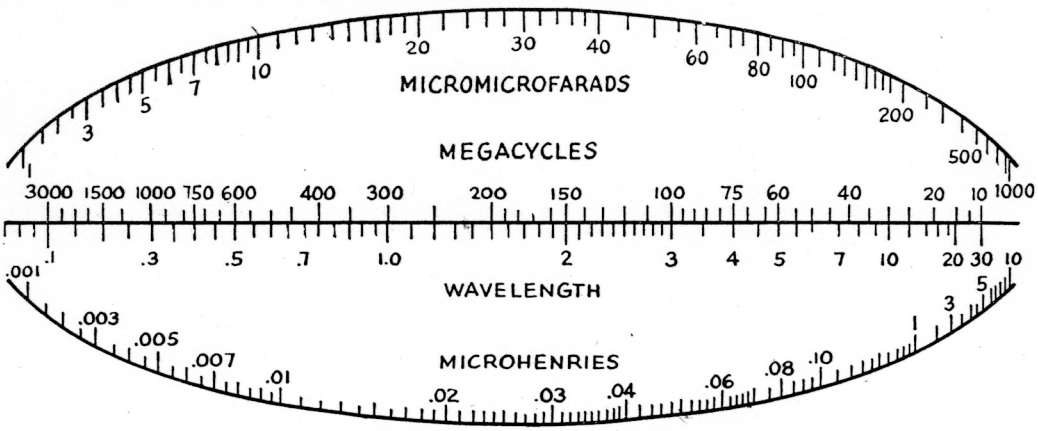

The chart above is an extension of the chart on the facing page, by means of which the same values of L, C and F can be found for the very-high- and ultrahigh-frequency ranges. It is used in the same manner as Chart I.

INDUCTANCE DESIGN CHARTS FOR V.H.F. COILS

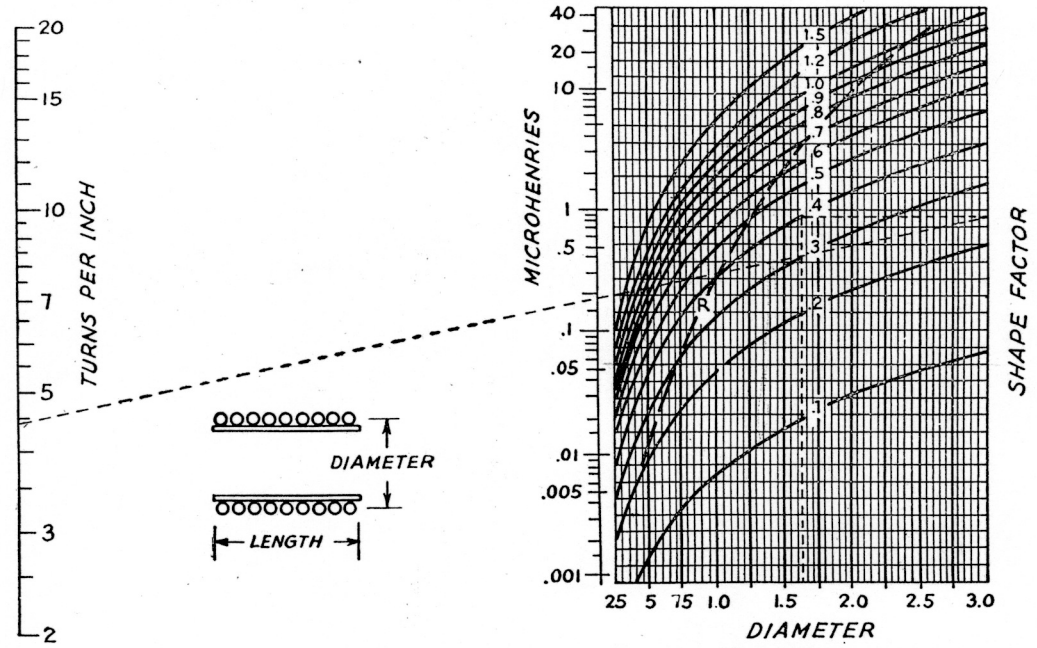

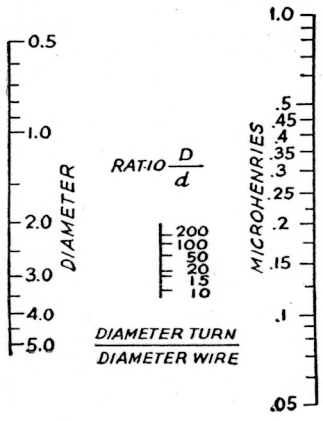

The charts on this page, prepared by Ralph R. Batcher, make possible the design of small coils for very-high frequency use with reasonable accuracy. The inductance of coils with two or more turns, or the dimensions required for a given value of inductance, may be determined from the chart above. The inductance of single-turn coils or loops can be obtained from the chart at the left.

To find the inductance of a given coil from the chart above, first locate the diameter in inches on the abscissa at the bottom. Draw a vertical line upward to intersect the curved scale corresponding to the length in inches. From this intersection project a line at right angles to locate the "shape factor" on the right-hand ordinate. Draw a line from this point to the "turns per inch" scale at the left; the point where this line crosses the "microhenries" scale is the inductance of the coil. In the example shown by the dashed lines, a coil of 1⅝-inch diameter wound with 1¾ turns, 0.4 inches long, or 4.4 turns per inch, has an inductance of approximately 0.18 μh.

To find the inductance of a single-turn coil or loop, draw a line from the diameter scale on the chart at the left through the point on the center scale which corresponds to the ratio of turn diameter to conductor diameter. The point where this line crosses the "microhenries" scale will give the inductance. Thus, a 2-inch loop of No. 12 wire has an inductance of approximately 0.11 μh.

In computing dimensions, the diameter of the coil is taken between centers of turns (diameter of form plus diameter of wire), while the length is the overall length of the coil (number of turns times distance between centers).

Courtesy Electronic Industries

EFFECT OF COIL SHIELDS ON INDUCTANCE

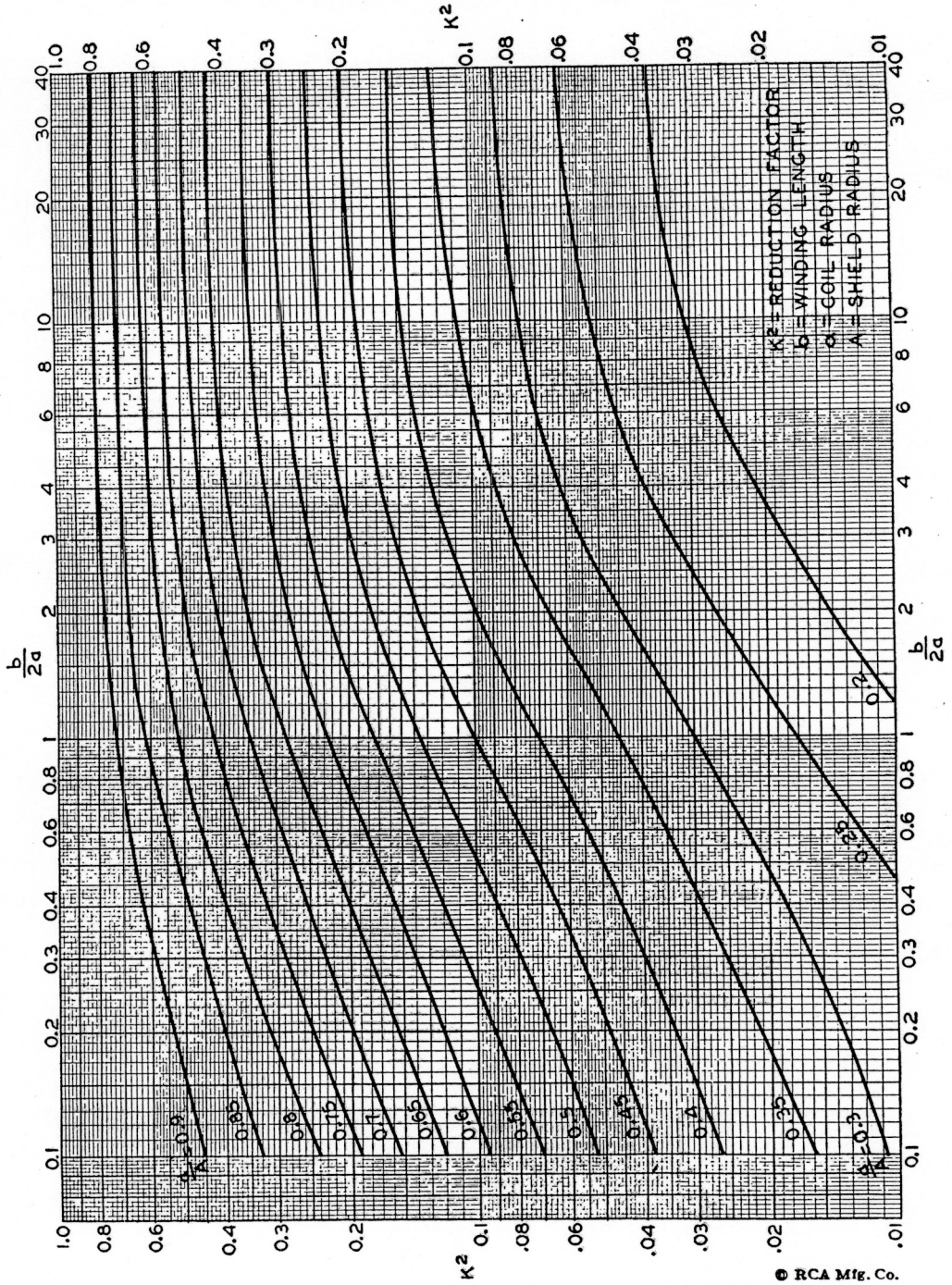

Enclosing a coil in a shield decreases the inductance of the coil (§ 2-11). Considering the shield as a single turn having low resistance compared to its reactance, the following formula gives the actual inductance of the coil within the shield: $L = L_a(1-K^2)$, where L is the desired inductance, L_a is the inductance of the coil outside the shield, and K^2 is a factor from the chart above. b — length of winding of coil; a — radius of coil; A — radius of shield. The curves are sufficiently accurate for all practical purposes throughout the range shown *when the length of the shield is greater than that of the coil by at least the radius of the coil.* If the shield can is square instead of circular, A may be taken as 0.6 times the width of one side. The reduction factor, K^2, is plotted against $b/2a$ (ratio of length to diameter of coil), for a series of values of a/A, the ratio of coil radius to shield radius (or coil diameter to shield diameter). The reduction in inductance does not become serious with coils of $b/2a$ ratios of 2 or less, until the shield diameter becomes less than twice the coil diameter. With an a/A ratio of 0.5, the reduction will be of the order of 15 per cent.

COPPER WIRE TABLE

Gauge No. B. & S.	Diam. in Mils[1]	Circular Mil Area	Turns per Linear Inch[2]				Turns per Square Inch[2]			Feet per Lb.		Ohms per 1000 ft. 25° C.	Current Carrying Capacity at 1500 C.M. per Amp.[3]	Diam. in mm.	Nearest British S.W.G. No.
			Enamel	S.C.C.	D.S.C. or S.C.C.	D.C.G.	S.C.C.	Enamel S.C.C.	D.C.C.	Bare	D.C.C.				
1	289.3	83690	—	—	—	—	—	—	—	3.947	—	.1264	55.7	7.348	1
2	257.6	66370	—	—	—	—	—	—	—	4.977	—	.1593	44.1	6.544	3
3	229.4	52640	—	—	—	—	—	—	—	6.276	—	.2009	35.0	5.827	4
4	204.3	41740	—	—	—	—	—	—	—	7.914	—	.2533	27.7	5.189	5
5	181.9	33100	—	—	—	—	—	—	—	9.980	—	.3195	22.0	4.621	7
6	162.0	26250	—	—	—	—	—	—	—	12.58	—	.4028	17.5	4.115	8
7	144.3	20820	—	—	—	—	—	—	—	15.87	—	.5080	13.8	3.665	9
8	128.5	16510	7.6	—	7.4	7.1	—	—	—	20.01	19.6	.6405	11.0	3.264	10
9	114.4	13090	8.6	—	8.2	7.8	—	—	—	25.23	24.6	.8077	8.7	2.906	11
10	101.9	10380	9.6	—	9.3	8.9	87.5	84.8	80.0	31.82	30.9	1.018	6.9	2.588	12
11	90.74	8234	10.7	—	10.3	9.8	110	105	97.5	40.12	38.8	1.284	5.5	2.305	13
12	80.81	6530	12.0	—	11.5	10.9	136	131	121	50.59	48.9	1.619	4.4	2.053	14
13	71.96	5178	13.5	—	12.8	12.0	170	162	150	63.80	61.5	2.042	3.5	1.828	15
14	64.08	4107	15.0	—	14.2	13.8	211	198	183	80.44	77.3	2.575	2.7	1.628	16
15	57.07	3257	16.8	—	15.8	14.7	262	250	223	101.4	97.3	3.247	2.2	1.450	17
16	50.82	2583	18.9	18.9	17.9	16.4	321	306	271	127.9	119	4.094	1.7	1.291	18
17	45.26	2048	21.2	21.2	19.9	18.1	397	372	329	161.3	150	5.163	1.3	1.150	18
18	40.30	1624	23.6	23.6	22.0	19.8	493	454	399	203.4	188	6.510	1.1	1.024	19
19	35.89	1288	26.4	26.4	24.4	21.8	592	553	479	256.5	237	8.210	.86	.9116	20
20	31.96	1022	29.4	29.4	27.0	23.8	775	725	625	323.4	298	10.35	.68	.8118	21
21	28.46	810.1	33.1	32.7	29.8	26.0	940	895	754	407.8	370	13.05	.54	.7230	22
22	25.35	642.4	37.0	36.5	34.1	30.0	1150	1070	910	514.2	461	16.46	.43	.6438	23
23	22.57	509.5	41.3	40.6	37.6	31.6	1400	1300	1080	648.4	584	20.76	.34	.5733	24
24	20.10	404.0	46.3	35.3	41.5	35.6	1700	1570	1260	817.7	745	26.17	.27	.5106	25
25	17.90	320.4	51.7	50.4	45.6	38.6	2060	1910	1510	1031	903	33.00	.21	.4547	26
26	15.94	254.1	58.0	55.6	50.2	41.8	2500	2300	1750	1300	1118	41.62	.17	.4049	27
27	14.20	201.5	64.9	61.5	55.0	45.0	3030	2780	2020	1639	1422	52.48	.13	.3606	29
28	12.64	159.8	72.7	68.6	60.2	48.5	3670	3350	2310	2067	1759	66.17	.11	.3211	30
29	11.26	126.7	81.6	74.8	65.4	51.8	4300	3900	2700	2607	2207	83.44	.084	.2859	31
30	10.03	100.5	90.5	83.3	71.5	55.5	5040	4660	3020	3287	2534	105.2	.067	.2546	33
31	8.928	79.70	101	92.0	77.5	59.2	5920	5280	—	4145	2768	132.7	.053	.2268	34
32	7.950	63.21	113	101	83.6	62.6	7060	6250	—	5227	3137	167.3	.042	.2019	36
33	7.080	50.13	127	110	90.3	66.3	8120	7360	—	6591	4697	211.0	.033	.1798	37
34	6.305	39.75	143	120	97.0	70.0	9600	8310	—	8310	6168	266.0	.026	.1601	38
35	5.615	31.52	158	132	104	73.5	10900	8700	—	10480	6737	335.0	.021	.1426	38–39
36	5.000	25.00	175	143	111	77.0	12200	10700	—	13210	7877	423.0	.017	.1270	39–40
37	4.453	19.83	198	154	118	80.3	—	—	—	16660	9309	533.4	.013	.1131	41
38	3.965	15.72	224	166	126	83.6	—	—	—	21010	10666	672.6	.010	.1007	42
39	3.531	12.47	248	181	133	86.6	—	—	—	26500	11907	848.1	.008	.0897	43
40	3.145	9.88	282	194	140	89.7	—	—	—	33410	14222	1069	.006	.0799	44

[1] A mil is 1/1000 (one thousandth) of an inch.
[2] The figures given are approximate only, since the thickness of the insulation varies with different manufacturers.
[3] The current-carrying capacity at 1000 C.M. per ampere is equal to the circular-mil area (Column 3) divided by 1000.

Current Capacity of Power Wiring

The National Board of Fire Underwriters has established the following as maximum current densities for commonly-used sizes of copper wire in electrical power circuits:

Gauge No. B. & S.	*Circular Mil Area*	*Amperes*	
		Rubber Insulation	*Other Insulation*
1	83690	100	150
2	66370	90	125
4	41740	70	90
6	26250	50	70
8	16510	35	50
10	10380	25	30
12	6530	20	25
14	4107	15	20
16	2583	6	10
18	1624	3	6

Relative Electrical Conductivity of Metals at Ordinary Temperatures

(Based on Copper as 100)

Aluminum (2S; pure)	59	Iron (cast)	2–12
Aluminum (alloys):		Iron (wrought)	11.4
Soft-annealed	45–50	Lead	7
Heat-treated	30–45	Manganin	3.7
Brass	28	Mercury	1.66
Cadmium	19	Molybdenum	33.2
Chromium	55	Monel	4
Climax	1.83	Nichrome	1.45
Cobalt	16.3	Nickel	12–16
Constantin	3.24	Phosphor Bronze	36
Copper (hard drawn)	89.5	Platinum	15
Copper (annealed)	100	Silver	106
Everdur	6	Steel	3–15
German Silver (18%)	5.3	Tin	13
Gold	65	Tungsten	28.9
Iron (pure)	17.7	Zinc	28.2

Approximate relations:
An increase of 1 in A. W. G. or B. & S. wire size increases resistance 25%.
An increase of 2 increases resistance 60%.
An increase of 3 increases resistance 100%.
An increase of 10 increases resistance 10 times.

¶ RMA Radio Color Codes

Standard color codes have been adopted by the Radio Manufacturers Association for the identification of the values and connections of standard components.

Resistors and condensers:

For identification of resistance and capacitance values of small carbon-type resistors and midget mica condensers, numbers are represented by the following colors:

0 — Black	5 — Green
1 — Brown	6 — Blue
2 — Red	7 — Violet
3 — Orange	8 — Gray
4 — Yellow	9 — White

Three colors are used on each resistor to identify its value. The body color represents the first figure of the resistance value; one end or tip is colored to represent the second figure; a colored band or dot near the center of the resistor gives the number of zeros following the first two figures. A 25,000-ohm resistor, for example, would be marked as follows: body, red (2); tip, green (5); band, orange (3 zeros).

Small mica condensers usually are marked with three colored dots, with an arrow or other symbol indicating the sequence of colors. Readings are in micromicrofarads ($\mu\mu$fd.), with the color code as above. For example, a 0.00025-μfd. (250-$\mu\mu$fd.) condenser would be marked as follows: red (2), green (5), brown (1 zero).

I.f. transformers:

Blue — plate lead.
Red — "B" + lead.
Green — grid (or diode) lead.
Black — grid (or diode) return.

NOTE: If the secondary of the i.f.t. is center-tapped, the second diode plate lead is green-and-black striped, and black is used for the center-tap lead.

A.f. transformers:

Blue — plate (finish) lead of primary.
Red — "B" + lead (this applies whether the primary is plain or center-tapped).
Brown — plate (start) lead on center-tapped primaries. (Blue may be used for this lead if polarity is not important.)
Green — grid (finish) lead to secondary.
Black — grid return (this applies whether the secondary is plain or center-tapped).
Yellow — grid (start) lead on center-tapped secondaries. (Green may be used for this lead if polarity is not important.)

NOTE: These markings apply also to line-to-grid, and tube-to-line transformers.

Loudspeaker voice coils:

Green — finish.
Black — start.

Field coils:

Black and red — start.
Yellow and red — finish.
Slate and Red — tap (if any).

Power transformers:

1) Primary Leads ..... *Black*
   If tapped:
   Common ..... *Black*
   Tap ..... *Black and Yellow Striped*
   Finish ..... *Black and Red Striped*
2) High-Voltage Plate Winding ..... *Red*
   Center-Tap ... *Red and Yellow Striped*
3) Rectifier Filament Winding ..... *Yellow*
   Center-Tap .. *Yellow and Blue Striped*
4) Filament Winding No. 1 ..... *Green*
   Center-Tap .. *Green and Yellow Striped*
5) Filament Winding No. 2 ..... *Brown*
   Center-Tap . *Brown and Yellow Striped*
6) Filament Winding No. 3 ..... *Slate*
   Center-Tap ... *Slate and Yellow Striped*

Standard Metal Gauges

Gauge No.	American or B. & S.[1]	U. S. Standard[2]	Birmingham or Stubs[3]
1	.2893	.28125	.300
2	.2576	.265625	.284
3	.2294	.25	.259
4	.2043	.234375	.238
5	.1819	.21875	.220
6	.1620	.203125	.203
7	.1443	.1875	.180
8	.1285	.171875	.165
9	.1144	.15625	.148
10	.1019	.140625	.134
11	.09074	.125	.120
12	.08081	.109375	.109
13	.07196	.09375	.095
14	.06408	.078125	.083
15	.05707	.0703125	.072
16	.05082	.0625	.065
17	.04526	.05625	.058
18	.04030	.05	.049
19	.03589	.04375	.042
20	.03196	.0375	.035
21	.02846	.034375	.032
22	.02535	.03125	.028
23	.02257	.028125	.025
24	.02010	.025	.022
25	.01790	.021875	.020
26	.01594	.01875	.018
27	.01420	.0171875	.016
28	.01264	.015625	.014
29	.01126	.0140625	.013
30	.01003	.0125	.012
31	.008928	.0109375	.010
32	.007950	.01015625	.009
33	.007080	.009375	.008
34	.006350	.00859375	.007
35	.005615	.0078125	.005
36	.005000	.00703125	.004
37	.004453	.006640626	....
38	.003965	.00625	....
39	.003531	.....	....
40	.003145	.....	....

[1] Used for aluminum, copper, brass and non-ferrous alloy sheets, wire and rods.

[2] Used for iron, steel, nickel and ferrous alloy sheets, wire and rods.

[3] Used for seamless tubes; also by some manufacturers for copper and brass.

Metric Prefixes

μ	$\frac{1}{1{,}000{,}000}$	One-millionth	micro-
m	$\frac{1}{1{,}000}$	One-thousandth	milli-
c	$\frac{1}{100}$	One-hundredth	centi-
d	$\frac{1}{10}$	One-tenth	deci-
	1	One	uni-
dk	10	Ten	deka-
h	100	One hundred	hekto-
k	1,000	One thousand	kilo-
	10,000	Ten thousand	myria-
M	1,000,000	One million	mega-

Multiples and Sub-Multiples

Ampere	= 1,000,000 microamperes
Ampere	= 1,000 milliamperes
Cycle	= 0.000,001 megacycle
Cycle	= 0.001 kilocycle
Farad	= 1,000,000,000,000 micro-microfarads
Farad	= 1,000,000 microfarads
Farad	= 1,000 millifarads
Henry	= 1,000,000 microhenrys
Henry	= 1,000 millihenrys
Kilocycle	= 1,000 cycles
Kilovolt	= 1,000 volts
Kilowatt	= 1,000 watts
Megacycle	= 1,000,000 cycles
Megohm	= 1,000,000 ohms
Mho	= 1,000,000 micromhos
Mho	= 1,000 millimhos
Microampere	= 0.000,001 ampere
Microfarad	= 0.000,001 farad
Microhenry	= 0.000,001 henry
Micromho	= 0.000,001 mho
Micro-ohm	= 0.000,001 ohm
Microvolt	= 0.000,001 volt
Microwatt	= 0.000,001 watt
Micromicrofarad	= 0.000,000,000,001 farad
Micromicro-ohm	= 0.000,000,000,001 ohm
Milliampere	= 0.001 ampere
Millihenry	= 0.001 henry
Millimho	= 0.001 mho
Milliohm	= 0.001 ohm
Millivolt	= 0.001 volt
Milliwatt	= 0.001 watt
Volt	= 1,000,000 microvolts
Volt	= 1,000 millivolts
Watt	= 1,000,000 microwatts
Watt	= 1,000 milliwatts
Watt	= 0.001 kilowatt

Decimal Equivalents of Fractions

1/32	.03125	17/32	.53125
1/16	.0625	9/16	.5625
3/32	.09375	19/32	.59375
1/8	.125	5/8	.625
5/32	.15625	21/32	.65625
3/16	.1875	11/16	.6875
7/32	.21875	23/32	.71875
1/4	.25	3/4	.75
9/32	.28125	25/32	.78125
5/16	.3125	13/16	.8125
11/32	.34375	27/32	.84375
3/8	.375	7/8	.875
13/32	.40625	29/32	.90625
7/16	.4375	15/16	.9375
15/32	.46875	31/32	.96875
1/2	.5	1	1.0

Units of Length

English		Metric	
1 mil	= 0.001 inch = 0.0254 millimeter	1 millimeter	= 39.37 mils
1 inch	= 2.54 centimeters	1 centimeter	= 0.3937 inch = 0.0328 foot
1 foot	= 30.48 centimeters	1 meter	= 3.28 feet
1 yard	= 0.9144 meter		= 1.094 yards
1 mile	= 1.6093 kilometers	1 kilometer	= 0.6214 mile
1 micron	= 10^{-6} meter = 0.0001 centimeter = 10,000 Angstrom units (A°)		
1 Angstrom	= 10^{-10} meter = 10^{-8} centimeter = 0.0001 micron		

ABBREVIATIONS FOR ELECTRICAL AND RADIO TERMS

Alternating current	a.c.	Medium frequency	m.f.
Ampere (amperes)	a.	Megacycles (per second)	Mc.
Amplitude modulation	a.m.	Megohm	MΩ
Antenna	ant.	Meter	m.
Audio frequency	a.f.	Microfarad	μfd.
Centimeter	cm.	Microhenry	μh.
Continuous waves	c.w.	Micromicrofarad	μμfd.
Cycles per second	c.p.s.	Microvolt	μv.
Decibel	db.	Microvolt per meter	μv/m.
Direct current	d.c.	Microwatt	μw.
Electromotive force	e.m.f.	Milliampere	ma.
Frequency	f.	Millivolt	mv.
Frequency modulation	f.m.	Milliwatt	mw.
Ground	gnd.	Modulated continuous waves	m.c.w.
Henry	h.	Ohm	Ω
High frequency	h.f.	Power	P.
Intermediate frequency	i.f.	Power factor	p.f.
Interrupted continuous waves	i.c.w.	Radio frequency	r.f.
Kilocycles (per second)	kc.	Ultrahigh frequency	u.h.f.
Kilovolt	kv.	Very-high frequency	v.h.f.
Kilowatt	kw.	Volt (volts)	v.
Magnetomotive force	m.m.f.	Watt (watts)	w.

Symbols for Electrical Quantities

Admittance	Y, y
Angular velocity ($2\pi f$)	ω
Capacitance	C
Conductance	G, g
Conductivity	γ
Current	I, i
Difference of potential	E, e
Dielectric constant	K
Dielectric flux	Ψ
Energy	W
Frequency	f
Impedance	Z, z
Inductance	L
Magnetic intensity	H
Magnetic flux	Φ
Magnetic flux density	B
Magnetomotive force	F
Mutual inductance	M
Number of conductors or turns	N
Period	T
Permeability	μ
Phase displacement	θ
Power	P, p
Quantity of electricity	Q, q
Reactance	X, x
Reactance, Capacitive	X_c
Reactance, Inductive	X_L
Reluctivity	v
Resistance	R, r
Resistivity	ρ
Susceptance	b
Speed of rotation	n
Voltage	E, e
Work	W

Greek Alphabet

Since Greek letters are used to stand for many electrical and radio quantities, the names and symbols of the Greek alphabet with the equivalent English characters are given.

Greek Letter	*Greek Name*	*English Equivalent*
Α α	Alpha	a
Β β	Beta	b
Γ γ	Gamma	g
Δ δ	Delta	d
Ε ε	Epsilon	e
Ζ ζ	Zeta	z
Η η	Eta	é
Θ θ	Theta	th
Ι ι	Iota	i
Κ κ	Kappa	k
Λ λ	Lambda	l
Μ μ	Mu	m
Ν ν	Nu	n
Ξ ξ	Xi	x
Ο ο	Omicron	ŏ
Π π	Pi	p
Ρ ρ	Rho	r
Σ σ	Sigma	s
Τ τ	Tau	t
Υ υ	Upsilon	u
Φ φ	Phi	ph
Χ χ	Chi	ch
Ψ ψ	Psi	ps
Ω ω	Omega	ō

Letter Symbols for Vacuum Tube Notation

Grid potential	E_g, e_g
Grid current	I_g, i_g
Grid conductance	g_g
Grid resistance	r_g
Grid bias voltage	E_c
Plate potential	E_p, e_p
Plate current	I_b, I_p, i_p
Plate conductance	g_p
Plate resistance	r_p
Plate supply voltage	E_b
Cathode current	I_c
Emission current	I_s
Mutual conductance	g_m
Amplification factor	μ
Filament terminal voltage	E_f
Filament current	I_f
Grid-plate capacity	C_{gp}
Grid-cathode capacity	C_{gk}
Plate-cathode capacity	C_{pk}
Grid capacity (input)	C_g
Plate capacity (output)	C_p

NOTE. — Small letters refer to instantaneous values.

Numerical Values

π =	3.1416	$(2\pi)^2$ =	39.4784
$1/\pi$ =	0.3183	$\log_{10} \pi$ =	0.4971
π^2 =	9.8696	$\log_{10} (\pi/2)$ =	0.1961
$1/\pi^2$ =	0.1013	$\log_{10} \pi^2$ =	0.9943
π^3 =	31.0063	$\log_{10} \sqrt{\pi}$ =	0.2486
$1/\pi^3$ =	0.0323	ϵ =	2.7183
$\sqrt{\pi}$ =	1.7725	$1/\epsilon$ =	0.3679
$1/\sqrt{\pi}$ =	0.5642	ϵ^2 =	7.3890
$\sqrt{\pi/2}$ =	1.2533	$\sqrt{\epsilon}$ =	1.6487
2π =	6.2832	$\log_{10} \epsilon$ =	0.4343
$\frac{1}{\log_{10} \epsilon}$ =	2.3026	$\sqrt{2}$ =	1.4142
		$\sqrt{3}$ =	1.7321
$1/2\pi$ =	0.1592	$1/\sqrt{2}$ =	0.7071
$(1/2\pi)^2$ =	0.0253	$1/\sqrt{3}$ =	0.5773

Area of circle = $(\pi/4) \times D^2 = 0.7854\ D^2$
Volume of sphere = $(\pi/6) \times D^3 = 0.5236\ D^3$
1 radian = 57° 17′ 44″ .8
= 57° 17′ .7468
= 57° .29578
1° = 0.001745 radian

DECIBEL CHART

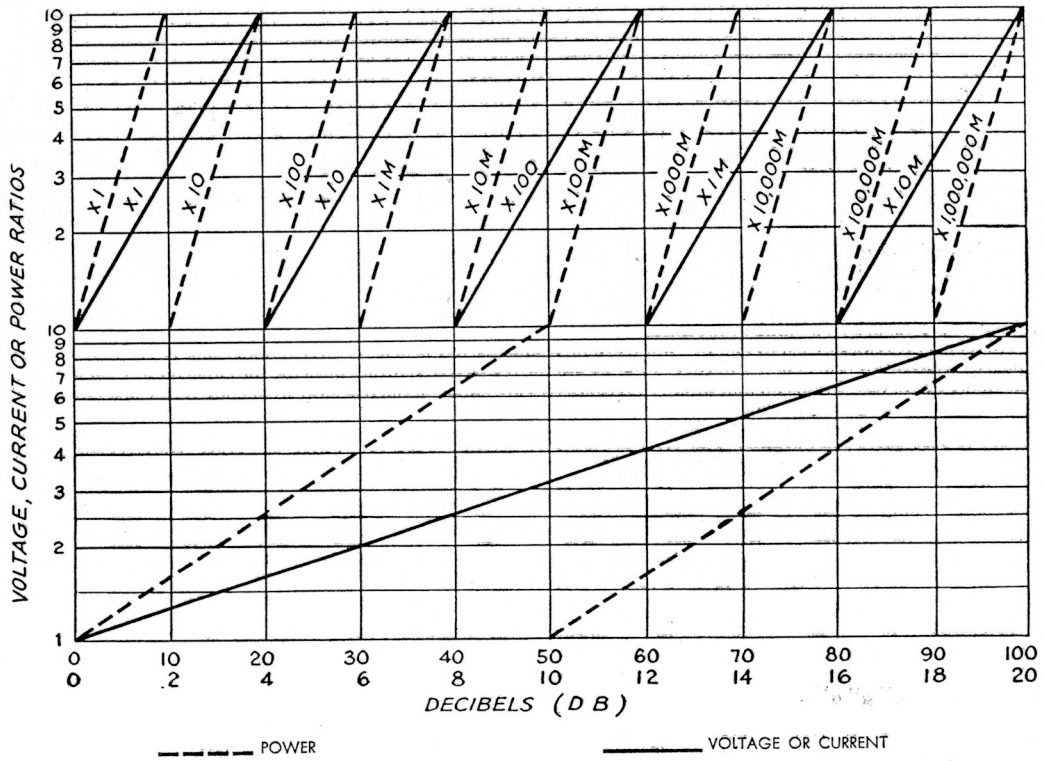

The chart above is direct-reading in terms of decibels for all power, voltage or current ratios. The top scale goes from 0 to 100 db. and is useful for very large ratios; the lower scale permits closer reading between 0 and 20 db., or one cycle of the extended scale. Solid lines show voltage or current ratios; dotted lines, power ratios. To find db. gain, divide output power by corresponding input power and read db. value for this ratio, using the appropriate curve (i.e., " × 1" for ratios from 1 to 10, " × 10" for ratios from 10 to 100, " × 100" for ratios from 100 to 1000, and so on). To find db. loss, as where output is less than input, divide input value by output value. Current and voltage ratios in db. can be found similarly, provided the input and output impedances are the same. Power, voltage and current values must be in the same units (watts, millivolts, microamperes, etc.).

INDUCTIVE AND CAPACITIVE REACTANCE VS. FREQUENCY CHART

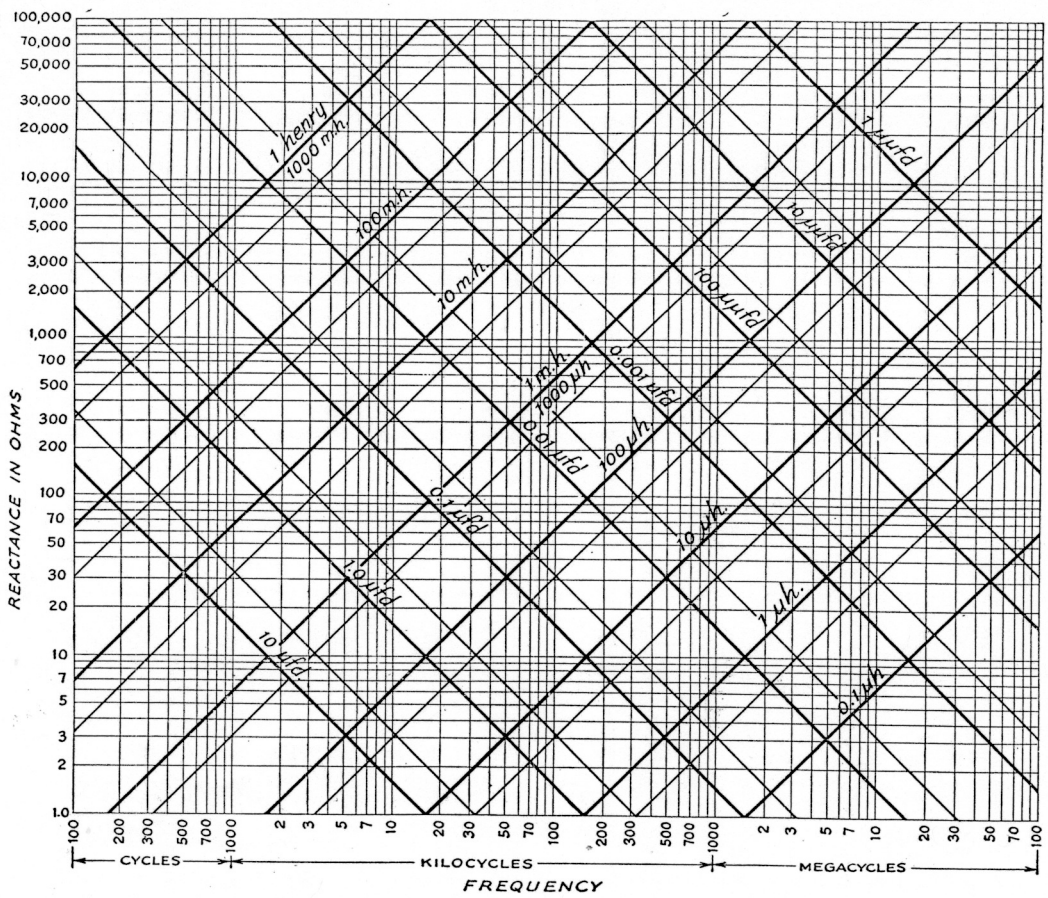

By use of the chart above, the approximate reactance of any capacity from 1.0 μμfd. to 10 μfd. at any frequency from 100 cycles to 100 megacycles, or the reactance of any inductance from 0.1 μh. to 1.0 henry, can be read directly. Intermediate values can be estimated by interpolation. In making interpolations, remember that the rate of change between lines is logarithmic. Use the frequency or reactance scales as a guide in estimating intermediate values on the capacity or inductance scales.

This chart also can be used to find the approximate resonance frequencies of *LC* combinations, or the frequency to which a given coil and condenser will tune. First locate the respective slanting lines for the capacity and inductance. The point where they intersect, i.e., where the reactances are equal, is the resonant frequency (projected downward and read on the frequency scale).

TABLE OF REACTANCES AT COMMONLY USED AUDIO AND RADIO FREQUENCIES

X_C *in Ohms at:*	2	4	8	12	16 μfd.
60 cycles	1310	655	332	221	166
100 "	796	398	199	131	99.5
400 "	199	99.5	49.7	33.2	24.9
1000 "	79.6	39.8	19.9	13.1	9.95
5000 "	15.9	7.96	3.98	2.65	1.99

X_C *in Ohms at:*	10	30	50	70	90 μμfd.
100 kc.	159000	53100	31800	22700	17700
455 "	35000	11700	7000	5000	3890
1600 "	9960	3320	1990	1420	1110
1750 "	9100	3030	1820	1300	1010
2000 "	7960	2650	1590	1140	885
5000 "	3180	1090	635	454	353

X_L *in Ohms at:*	2	4	6	8	10 henries
60 cycles	752	1500	2260	3000	3760
100 "	1260	2520	3770	5020	6280
400 "	5030	10500	15100	21000	25100
1000 "	12600	25200	37700	50200	62800
5000 "	62800	126000	188000	252000	314000

X_L *in Ohms at:*	20	40	60	80	100 μh.
100 kc.	12.6	25.2	37.7	50.2	62.8
455 "	57.2	114	171	228	286
1600 "	200	400	600	800	1000
1750 "	220	440	660	880	1100
2000 "	252	504	756	1008	1260
5000 "	628	1260	1880	2520	3140

To find reactance for other values of *L* or *C*, move the decimal point in the reactance figure to correspond with the difference in the *L* or *C* figure — to the left for increasing capacity and to the right for increasing inductance, and vice versa.

To find reactance for higher-frequency multiples, multiply the reactance figure by the multiple of the frequency, according to the sign of the reactance (i.e., multiply for inductive reactance; divide for capacitive reactance).

Example 1: The reactance of a 1000-μμfd. condenser at 1750 kc. is the value for 10 μμfd. with the decimal point moved two places to the left, or 91 ohms. At 7 Mc. the reactance of this condenser is its value at 1750 kc. divided by 4, or 228 ohms.

Example 2: The reactance of a 60-henry choke at 60 cycles is the value for 6 henries with the decimal moved one place to the right, or 22,600 ohms. At 120 cycles the reactance of this choke is its value at 60 cycles multiplied by 2, or 45,200 ohms.

VACUUM-TUBE RATINGS

The data in the classified tube tables on pages 443–472 are of two kinds — maximum ratings, and typical operating conditions.

As explained in §3-1, vacuum tubes are designed to be operated within definite maximum (and minimum) ratings. These ratings are the maximum safe operating voltages and currents for the electrodes, based on inherent limiting factors such as permissible cathode temperature, emission, and power dissipation in electrodes. In addition to the maximum ratings for each type performance data is given in the form of typical operating conditions showing applications and circuit-design considerations.

In the transmitting-tube tables, maximum ratings for electrode voltage, current and dissipation are given separately from the typical operating conditions for the recommended classes of operation. In the receiving-tube tables, because of space limitations, ratings and operating data are combined. Where only one set of operating conditions appears, the positive electrode voltages shown (plate, screen, etc.) are, in general, also the maximum rated voltages for those electrodes.

The maximum ratings are intended to apply under conditions of normal operation. In practice, power-supply or primary-source voltage fluctuations result in appreciable variation around the normal or designed operating conditions. The maximum limits of these variations must be taken into account in the design of equipment. Recommended practice is to assume a "design-center voltage," which is the normal voltage supplied by the primary power source. The over-all design is made such that the maximum upward variation (design-maximum voltage) will not cause the maximum ratings of components to be exceeded, while operation at the design-minimum voltage will not result in impaired performance. The usual ranges of variation for the three common power sources are given in the following table.

Power-Supply Design Voltages

Source	*Design-Center Voltage*	*Design-Minimum Voltage*	*Design-Maximum Voltage*
"115-volt" a.c. power line [1]	117 [1]	105	130
"6-volt" storage battery	6	5.25	6.3 [2]
	6.3 [3]	....	7–8 [3]
"1.5-volt" dry cell [4]	1.4	1.1 [5]	1.6

[1] Also applies to a.c.-d.c. equipment which may be operated from "110-volt" d.c. lines.

[2] Maximum terminal potential without load for fully charged battery with specific gravity of 1.300.

[3] For storage battery connected to charger, as in automotive service. Maximum voltage will vary with system; equipment should be rated to withstand 7 volts continuously, 8 volts intermittently.

[4] Values given are for filament operation. For "B" batteries, use standard rating as design-center voltage (45, 90, etc.); minimum and maximum voltages will be as shown multiplied by the number of cells.

[5] In some types of equipment, design-minimum voltages can be carried as low as 0.9 volts per cell.

ARMY–NAVY PREFERRED LIST OF VACUUM TUBES

Receiving

Filament Volts	*Diodes*	*Diode-Triodes*	*Triodes*	*Twin Triodes*	*Pentodes Remote*	*Pentodes Sharp*	*Rectifiers*	*Converters*	*Power*	*Indicators*
1.4	1A3	1LH4	1G4GT	3A5 1291	1T4	1L4 1LN5 1S5		1LC6 1R5	3A4 3Q4 3Q5GT 1299	991
5.0							5U4G 5Y3GT			
6.3	6H6* 9006	6SQ7* 6SR7*	2C22 2C26 6C4 6J5* 1201 9002	6J6 6SL6GT 6SN7GT	6AG5 6AK5 6SG7* 6SK7* 9003	6AC7* 6AG7* 6SH7* 6SJ7* 9001	6X5GT 1005	6SA7*	6B4G 6G6G 6L6G 6N7GT 6V6GT 6Y6G	6E5
12.6	1246*	12SQ7* 12SR7*	12J5GT	12SL7GT 12SN7GT	12SG7* 12SK7*	12SH7* 12SJ7*		12SA7*	12A6*	1629

Transmitting

Triodes	*Tetrodes*	*Twin Tetrodes*	*Pentodes*
304TH	807	815	2E22
801-A	813	829	803
811	814	832	837
826	1625		
833-A			
838			
1626			
8005			
8025			

Miscellaneous

Rectifiers Vacuum	*Rectifiers Gas*	*Grid-Control Rectifiers*	*Voltage Regulators*	*Photo-tubes*	*Cathode-Ray*
2X2	4B25	394-A	VR90-30	918	2AP1
3B24	83	884	VR105-30	927	3BP1
5R4GY	866-A	2050	VR150-30		5CP1
73R	872-A	C1B			9EP1
371-A		C5B			
705-A					
836					
1616					
8020					

* Where direct interchangeability is assured, GT and L counterparts of the preferred metal types may be used.

RECEIVING TUBE CLASSIFICATION CHART

Cathode Volts	1.4	2.0	2.5 to 5.0	6.3	12.6 to 117
DIODE DETECTORS & RECTIFIERS					
Detectors — single	1A3				12H6
Detectors — twin				(6H6, 6H6-GT/G), 7A6	12Z3, 35Z3, 35Z4-GT, 35Z5-GT/G, 45Z3, 45Z5-GT
Rectifiers — half-wave				1-v	
Rectifiers — half-wave, with beam power amplifier					32L7-GT, 70L7-GT, 117L/M7-GT, 117N7-GT, 117P7-GT
Rectifiers — half-wave, with power pentode					12A7, 25A7-GT/G
Rectifiers — full-wave — vacuum			(5T4, 5U4-G, 5X4-G, 5Z3), (5W4, 5W4-GT/G, 5Y3-GT/G, 5Z4, 5Y4-G, 80), (5V4-G, 83-v)	(6X5, 6X5-GT/G, 84), 6Y5, 6Z5, 6ZY5-G, 7Y4	
Rectifiers — full-wave — mercury gas			82, 83		
	Cold-Cathode Types: 0Z4, 0Z4-G.				
Rectifier-Doublers					(25Z6, 25Z6-GT/G, 25Z5, 25Y5), 50Y6-GT/G, 50Z7-G, 117Z6-GT/G
DIODE DETECTORS with AMPLIFIERS					
One Diode — with high-mu triode	(1H5-G, 1H5-GT), 1LH4				
One Diode — with high-mu triode, r-f pentode	3A8-GT*				
One Diode — with medium-mu triode, power pentode	1D8-GT				
One Diode — with pentode	1S5				
One Diode — with power pentode	1N6-G				
Two Diodes — with medium mu-triode		(1B5, 1H6-G)	55	(6SR7, 6R7, 6R7-G, 6R7-GT, 6ST7, 6V7-G, 85), 6C7, 7E6	12SR7
Two Diodes — with high-mu triode			2A6	(6SQ7, 6SQ7-GT/G, 6Q7, 6Q7-G, 6Q7-GT, 6B6-G, 6T7-G, 75), 7B6, 7C6	(12SQ7, 12SQ7-GT/G, 12Q7-GT)
Two Diodes — with pentode		(1F7-G, 1F6)	2B7	(6B8, 6B8-G, 6B7, 6B7-S), 6SF7, 7E7	12C8, 12SF7
CONVERTERS & MIXERS — Pentagrid Converters	(1A7-G, 1A7-GT), 1R5, 1B7-GT, 1LA6	(1C7-G, 1C6), (1D7-G, 1A6)	2A7	(6SA7, 6SA7-GT/G, 6A8, 6A8-G, 6A8-GT, 6D8-G, 6A7, 6A7S), 7B8, 7Q7	(12SA7, 12SA7-GT/G, 12A8-GT)
Triode-Hexode Converters				(6K8, 6K8-G, 6K8-GT),	12K8
Triode-Heptode Converters				6J8-G, 7J7	
Octode Converters				7A8	
Pentagrid Mixers				(6L7, 6L7-G)	

Courtesy of R.C.A.

VOLTAGE AMPLIFIERS, DETECTORS, OSCILLATORS — Triodes — medium-mu — single unit	1G4-GT/G	(1H4-G, 30)	27, 56, 485	(6C5, 6C5-GT/G), (6J5, 6J5-GT/G, 7A4), (6P5-GT/G, 76), 6L5-G, 6AE5-GT/G, 37	12J5-GT
Triodes — medium-mu — twin unit	3A5*			6C8-G, 6F8-G 6J6, 6SN7-GT	12AH7-GT 12SN7-GT
Triodes — medium-mu — twin plate				6AE6-G	
Triodes — medium-mu — twin input				6AE7-GT	
Triodes — medium-mu — with power pentode				6AD7-G	
Triodes — medium-mu — with diode, power pentode	1D8-GT				
Triodes — high-mu — single unit				6SF5, 6SF5-GT, 6F5, 6F5-G, 6F5-GT), 6K5-G, 7B4	(12SF5, 12SF5-GT, 12F5-GT)
Triodes — high-mu — twin unit				(6SC7, 7F7), 6SL7-GT	12SC7, 12SL7-GT
Triodes — high-mu — with diode, r-f pentode	3A8-GT*				
Tetrodes — remote cut-off		1D5-GT	35		
Tetrodes — sharp cut-off		32	24-A	36	
Pentodes — remote cut-off	1T4, 1P5-GT	(1D5-GP, 1A4-P), 34	58	6SS7, (6SK7, 6SK7-GT/G, 6K7, 6K7-G, 6K7-GT, 78), (6S7, 6S7-G), (6U7-G, 6D6, 6E7), 6W7-G, 39/44, 7A7, 6AB7, 6AC7, 7H7, 7B7	(12SK7, 12SK7-GT, 12K7-GT), 14A7/ 12B7
Pentodes — remote cut-off, with triode				6F7, 6P7-G	12B8-GT, 25B8-GT
Pentodes — semi-remote cut-off				6SG7	12SG7
Pentodes — sharp cut-off	(1N5-G, 1N5-GT), 1L4, 1LN5	(1E5-GP, 1B4-P), 15	57	6AG5, 6SH7, (6SJ7, 6SJ7-GT, 6J7, 6J7-G, 6J7-GT, 6D7), 77, 6C6, 7C7, 7G7/1232	12SH7, (12SJ7, 12SJ7-GT, 12J7-GT)
Pentodes — sharp cut-off, with diode, high-mu triode	3A8-GT*				
POWER AMPLIFIERS — Triodes — low-mu — single unit		31	2A3, 45 183/483	6A3, 6B4-G	
Triodes — low-mu — twin unit				6E6	
Triodes — high-mu — single unit		49	46	6AC5-GT/G, 6C4	25AC5-GT/G
Triodes — high-mu — twin unit	1G6-GT/G	(1J6-G, 19)	53	(6N7, 6N7-GT/G, 6A6), (6Y7-G, 79), 6Z7-G	
Beam Tubes — without rectifier	(1Q5-GT/G, 3Q5-GT/G*), 1T5-GT			(6L6, 6L6-G), (6V6, 6V6-GT/G), 6Y6-G, 7A5, 7C5	(25L6, 25L6-GT/G), 25C6-G, 35A5, 35L6-GT/G, 50L6-GT
Beam Tubes — with rectifier					32L7-GT, 70L7-GT, 117L/M7-GT 117N7-GT, 117P7-GT
Pentodes — single unit	1A5-GT/G, (1S4, 3S4*), 1C5-GT/G, 1LA4, 1LB4, (3A4*, 3Q4*)	(1F5-G, 1F4), (1G5-G, 1J5-G), 33	2A5, 47, 59	(6F6, 6F6-G, 42), (6K6-GT/G, 41), 6G6-G, 38, 6A4, 89, 7B5	12A5, (25A6, 25A6-GT/G, 43), 25B6-G
Pentodes — twin unit		1E7-G★			
Pentodes — with diode & triode	1D8-GT				
Pentodes — with medium-mu triode				6AD7-G	
Pentodes — with rectifier					12A7, 25A7-GT/G
Pentodes — video				6AG7	
Direct-Coupled Amplifiers				6B5, 6N6-G	(25B5, 25N6-G)
ELECTRON-RAY TUBES — Single — with remote cut-off triode				6AB5/6N5, 6U5/6G5	
Single — with sharp cut-off triode			2E5	6E5	
Twin, without triode				6AD6-G, 6AF6-G	
GAS-TRIODES			2A4-G		

★ Two 1F5-G's in one bulb.

* Filament arranged for either 1.4 volt or 2.8-volt operation.

VACUUM-TUBE CLASSIFIED DATA TABLES AND INDEX

In the tables on pages 443–472 will be found essential characteristics and typical operating data for all U. S.-made standard receiving, transmitting and special-purpose vacuum tubes on which data is available, classified by use. Base diagrams are shown on pages 437–442. For convenience in locating types whose essential characteristics are not known, the index below lists all types in numerical/alphabetical order with the page on which data is to be found.

TUBE NO.	PAGE	TUBE NO.	PAGE	TUBE NO.	PAGE	TUBE NO.	PAGE
00-A	454	2V3G	458	6D6	447	6Y7G	446
01-A	454	2W3	458	6D7	447	6Z3	458
0A4G	456	2X2	458	6D8G	445	6Z4	458
0B3/VR90-30	456	2Y2	458	6E5	447	6Z4 (84/6Z4)	459
0D3/VR150-30	456	2Z2	458	6E6	447	6Z5	458
0Z4	458	3A4	454, 469	6E7	447	6Z7G	446
1	458	3A5	454, 460	6E8G	445	6ZY5G	458
1A3	450	3A8GT	454	6F5	443	7A4	446
1A4P	449	3AP1/906-P1	456	6F6	443	7A5	446
1A4T	449	3AP4/906-P4	456	6F7	447	7A6	446
1A5G	450	3B5GT	454	6F8G	445	7A7	446
1A6	449	3B7/1291	451	6G5/6U5	447	7A8	446
1A7G	450	3BP1	456	6G6G	445	7AP4	457
1B4P/951	449	3C5GT	454	6H4GT	445	7B4	446
1B5/25S	449	3D6/1299	451	6H5	447	7B5	446
1B7G	450	3EP1/1806-P1	457	6H6	443	7B6	446
1B8GT	450	3LE4	454	6H8G	445	7B7	446
1C5G	450	3LF4	454	6J5	443	7B8	446
1C6	449	3Q4	454	6J6	447, 454, 460	7C4/1203	455
1C7G	450	3Q5GT	454	6J7	443	7C5	446
1C21	456	3S4	454	6J8G	445	7C6	446
1D5GP	450	4A6G	454	6K5G	445	7C7	446
1D5GT	450	5AP1/1805-P1	457	6K6G	445	7CP1/1811-P1	457
1D7G	450	5AP4/1805-P4	457	6K7	443	7D7	446
1D8GT	450	5BP1/1802-P1	457	6K8	443	7E5 (1201)	455
1E4G	450	5BP4/1802-P4	457	6L5G	445	7E5/1221	448
1E5GP	450	5HP1 (5HP4)	457	6L6	443, 470	7E6	446
1E7G	450	5HP4 (5HP1)	457	6L6GX	470	7E7	446
1F4	449	5R4GY	458	6L7	443	7F7	446
1F5G	450	5T4	458	6M6G	445	7G7/1232	446
1F6	449	5U4G	458	6M7G	445	7H7	446
1F7GV	450	5V4G	458	6M8GT	445	7J7	446
1G4G	450	5W4	458	6N5	447	7K7	446
1G5G	450	5X3	458	6N6G	445	7L7	446
1G6G	450	5X4G	458	6N7	443	7N7	447
1H4G	450	5Y3G	458	6P5G	445	7Q7	447
1H5G	450	5Y4G	458	6P7G	445	7R7	447
1H6G	450	5Z3	458	6P8G	445	7S7	447
1J5G	450	5Z4	458	6Q6G	445	7T7	447
1J6G	450	6A3	447	6Q7	443	7V7	447
1L4	450	6A4	447	6R6G	445	7W7	447
1LA4	450	6A5G	444	6R7	443	7Y4	458
1LA6	450	6A6	447	6S6GT	445	7Z4	458
1LB4	450	6A7	447	6S7	443	9AP4/1804-P4	457
1LB6GL	450	6A8	443	6SA7	443	9CP4	457
1LC5	450	6AB5	447	6SC7	443	9JP1/1809-P1	457
1LC6	450	6AB6G	444	6SD7GT	445	10	454
1LD5	451	6AB7 (1853)	443	6SE7GT	445	10 (RK10)	460
1LE3	451	6AC5G	444	6SF5	443	11/12	454
1LH4	451	6AC6G	444	6SF7	443	12 (11/12)	454
1LN5	451	6AC7 (1852)	443	6SG7	444	12A5	452
1N5G	451	6AD5G	444	6SH7	444	12A6	452
1N6G	451	6AD6G	444	6SJ7	444	12A7	452, 458
1P5G	451	6AD7G	444	6SK7	444	12A8GT	452
1Q5G	451	6AE5G	445	6SL7GT	445	12A4HGT	452
1R4/1294	451	6AE6G	445	6SN7GT	445	12AP4/1803-P4	457
1R5	451	6AE7GT	445	6SQ7	444	12B6M	452
1S4	451	6AF5G	445	6SR7	444	12B7 (14A7/12B7)	452
1S5	451	6AF6G	445, 447	6SS7	444	12B7ML	452
1SA6GT	451	6AF7G	445	6ST7	444	12B8GT	452
1SB6GT	451	6AG5	454	6T5	447	12C8	452
1T4	451	6AG6G	445	6T6GM	445	12CP4	457
1T5GT	451	6AG7	443	6T7	444	12E5GT	452
1-V	458	6AH5G	445	6U5 (6G5/6U5)	447	12F5GT	452
2A3	448	6AH7GT	445	6U6GT	445	12G7G	452
2A4G	456	6AL6G	445	6U7G	445	12H6	452
2A5	448	6B4G	445	6V6	444	12J5GT	452
2A6	448	6B5	447	6V7G	445	12J7GT	452
2A7	448	6B6G	445	6W5G	458	12K7GT	452
2AP1	456	6B7	447	6W6GT	445	12K8	452
2B6	448	6B8	443	6W7G	446	12Q7GT	452
2B7	448	6C4	454, 460	6X5	458	12SA7	452
2C21 (1642/2C21)	446	6C5	443	6X6G	446	12SC7	452
2C22	444, 460	6C6	447	6Y3	458	12SF5	452
2E5	448	6C7	447	6Y5	458	12SF7	452
2G5	448	6C8G	445	6Y6G	446	12SG7	452

TUBE NO.	PAGE
12SH7	452
12SJ7	452
12SK7	452
12SL7GT	452
12S7NGT	452
12SQ7	452
12SR7	452
12Z3	458
12Z5	458
14A4	452
14A5	452
14A7/12B7	452
14AF7	452
14B6	452
14B8	452
14C5	452
14C7	452
14E6	452
14E7	452
14F7	453
14H7	453
14J7	453
14N7	453
14Q7	453
14R7	453
14S7	453
14W7	453
14Y4	458
14Z3	458
15	449
19	449
20	454
20J8GM	453
21A7	453
22	454
24-A	448
24-XH	457
25A6	453
25A7G	453, 458
25AC5G	453
25B5	453
25B6G	453
25B8GT	453
25C6G	453
25D8GT	453
25L6	453
25N6G	453
25S (1B5/25S)	449
25X6GT	458
25Y4GT	458
25Y5	458
25Z3	458
25Z4	458
25Z5	458
25Z6	458
26	454
27	448
28D7	454
30	449
31	449
32	449
32L7GT	453, 458
33	449
34	449
35	448
35A5	453
35L6G	453
35T	463
35TG	463
35Y4	458
35Z3LT	458
35Z4GT	458
35Z5G	458
35Z6G	458
36	448
37	448
38	448
39/44	448
40	454
40Z5GT	459
41	448
42	448
43	453
44 (39/44)	448
45	448
45Z3	459
45Z5GT	459
46	448
47	449
48	453
49	449
50	454
50A5	453
50C6G	453
50L6GT	453
50T	464
50Y6GT	459
50Z6G	459
50Z7G	459
53	449
55	449
56	449
57	449
58	449
59	449
70A7GT	453, 459
70L7GT	453, 459
71-A	454
75	448
75T	464
76	448
77	448
78	448
79	448
80	459
81	459
82	459
83	459
83-V	459
84 (6Z4)	459
85	448
85AS	448
89	448
99	455
100TH	464
100TL	464
111H	464
112-A	455
117L7GT/117M7GT	453, 459
17M17GT (117L7GT/ 117M7GT)	453, 459
117N7GT	453, 459
117P7GT	453, 459
117Z4GT	459
117Z6GT	459
150T	466
152TL (HK252-L)	466
182-B/482-B	455
183/483	455
203-A (303-A)	465
203-H	465
204-A (304-A)	468
205-D	460
211 (311, 835)	465
212-E (241-B, 312-E)	468
217-A	459
217-C	459
241-B (212-E, 312-E)	468
242-A	464
242-B (342-B)	465
242-C	465
250TH	467
250TL	467
254-A	469
254-B	470
257	455
261-A (361-A)	465
270-A	468
276-A (376-A)	465
282-A	471
284-B	465
284-D	464
295-A	465
300T	468
303-A (202-A)	465
304-A (204-A)	468
304-A (304-B)	462
304-B (304-A)	462
304TL (HK304-L)	468
305-A	471
306-A	469
307-A	469
308-B	468
310	460
311 (211, 835)	465
312-A	471
312-E (212-E, 241-B)	468
316-A	461
342-B (242-B)	465
356-A	462
361-A (261-A)	465
376-A (276-A)	465
482-B (182-B/482-B)	455
483 (183/483)	455
485	455
756	462
800	461
801 (801-A/801)	460
801 (HY801-A)	460
801-A/801	460
802	469
803	472
804	471
805 (905)	466
805 (RK57/805)	466
806	467
807 (HY61/807)	470
807 (1625)	470
808	463
809	461
810 (1627)	467
811	463
812	463
813	471
814	471
815	470
816	459
825	462, 471
826	463
828	471
829	470
829-A	470
830	462
830-B (930-B)	463
831	468
832	469
832-A	469
833-A	468
834	463
835 (211, 311)	465
836	459
837 (RK44)	469
838 (938)	465
840	449
841	460
841-A	463
841SW	463
843	460
844	469
849	468
850	472
852	466
860	472
861	472
864	455
865	469
866 (866-A/866)	459
866-A/866	459
866B	459
866Jr	459
871	459
872 (872-A/872)	459
872-A/872	459
874	456
876	456
878	459
879	459
884	456
885	456
886	456
902	457
903	457
904	457
905	457
905 (805)	466
906-P1 (3AP1/906-P1)	456
906-P4 (3AP4/906-P4)	456
907	457
908	457
909	457
910	457
911	457
912	457
913	457
914	457
930-B (830-B)	463
938 (838)	465
950	449
951 (1B4P/951)	449
954	455
955	455
956	455
957	455
958	455
959	455
967	456
975-A	459
991	456
1201 (7E5)	455
1203 (7C4/1203)	455
1204	455
1221 (7E5/1221)	448
1223	446
1231	446
1232 (7G7/1232)	446
1284	453
1291 (3B7/1291)	451
1293	451
1294 (1R4/1294)	451
1299 (3D6/1299)	451
1602	460
1603	448
1608	460
1609	455
1610	469
1611	444
1612	444
1613	469
1614	470
1616	459
1619	469
1620	444
1621	444
1622	444
1623	461
1624	470
1625	470
1626	460
1627 (810)	467
1628	461
1629	453
1631	453
1632	453
1633	453
1634	453
1635	446
1642/2C21	446
1644	453
1800	457
1801	457
1802-P1 (5BP1)	457
1802-P4 (5BP4)	457
1803-P4 (12AP4)	457
1804-P4 (9AP4)	457
1805-P1 (5AP1)	457
1805-P4 (5AP4)	457
1806-P1 (3EP1)	457
1809-P1 (9JP1)	457
1811-P1 (7CP1)	457
1840	472
1847	472
1848	472
1849	472
1850	472
1851	444

TUBE NO.	PAGE	TUBE NO.	PAGE	TUBE NO.	PAGE	TUBE NO.	PAGE
1852 (6AC7)	443	HF250	466	HY866 Jr.	459	RK57/805	466
1853 (6AB7)	443	HF300	467	HY1231Z (HY312)	461	RK58	465
1898	472	HK24	461	HY1269	470	RK59	460
1899	472	HK54	462	KY21	456	RK60	459
2002	457	HK154	462	KY866	456	RK62	456
2005	457	HK158	462	M54	455	RK63 (RK63-A)	467
2050	456	HK252-L (152TL)	466	M64	455	RK63-A (R6K3)	467
2051	456	HK253	459	M74	455	RK64	469
2203	472	HK254	465	RK10 (10)	460	RK65	472
7000	446	HK257	471	RK11	461	RK66	470
7700	448	HK304-L (304TL)	468	RK12	461	RK100	448, 460
8000	467	HK354	466	RK15	449	RK866	459
8001	471	HK354C	466	RK16	449	RM208	456
8003	466	HK354D	466	RK17	449	RM209	456
8005	464	HK354E	467	RK18	461	T20	460
8008	459	HK354F	467	RK19	459	T21	470
8010-R	462	HK454-H	468	RK20 (RK20-A, RK46)	470	T40	462
8012	461	HK454-L	468	RK20-A (RK20, RK46)	470	T55	463
8013	459	HK654	468	RK21	459	T125	466
8016	459	HV12 (T814)	467	RK22	459	T200	467
9001	455	HV18 (HF200)	466	RK23 (RK25, RK25-B)	469	T814 (HV12)	467
9002	455	HV27 (T822)	467	RK24	449, 460	T822 (HV27)	467
9003	455	HY6J5GTX	460	RK25 (RK23, RK25-B)	469	TW75	464
9004	455	HY6L6GTX	470	RK25-B (RK23, RK25)	469	TW150	466
9005	455	HY6V6GTX	469	RK28	471	Twin 30	461
BA	458	HY24	460	RK28-A	472	TZ20	461
BH	458	HY25	461	RK30	461	TZ40	462
BR	458	HY30Z	461	RK31	461	UH35	463
CK501	451	HY31Z (HY1231Z)	461	RK32	462	UH50	462
CK502	451	HY40	461	RK33	460	UH51	462
CK503	451	HY40Z	462	RK34	460	V70	463
CK504	451	HY51A	463	RK35	462	V70A	463
CK505	451	HY51B	463	RK36	464	V70B	463
GL146	466	HY51Z	463	RK37	462	V70C	463
GL152	466	HY57	462	RK38	464	V70D	464
GL159	467	HY60	469	RK39 (RK41)	470	VR75-30	456
GL169	468	HY61/807	470	RK41 (RK39)	470	VR90-30 (0B3/VR90-30)	456
HD203-A	466	HY63	469	RK42	451	VR105-30	456
HF60	463	HY65	469	RK43	451	VR150-30 (0D3/VR150-30)	456
HF75	464	HY67	471	RK44 (837)	469	XXB	455
HF100	464	HY69	470	RK46 (RK20, RK20-A)	470	XXD	454
HF120	465	HY75	460	RK47	471	XXL	447
HF125	465	HY113	451	RK48 (RK48-A)	471	XXFM	455
HF130	466	HY114-B	460	RK48-A (R4K8)	471	Z225	459
HF140	465	HY115	451	RK49	470	ZB120	464
HF150	466	HY125	451	RK51	463		
HF175	466	HY615	460	RK52	463		
HF200 (HV18)	466	HY801-A (801)	460	RK56	469		

VACUUM-TUBE BASE DIAGRAMS

The diagrams on this and the following four pages show standard socket connections corresponding to the base designations given in the column headed "Socket Connections" in the classified tube data tables on pages 443–472. Footnotes under each table indicate in which of the five groups a given base diagram is to be found. In one group pages (438–441) are contained all receiving tubes having base designations corresponding to the standard RMA registry system. Diagrams for acorn and cathode-ray tubes are shown separately on page 441. Transmitting tube diagrams are given on page 442. Supplementary base diagrams not included under these classifications are shown below. All diagrams are in uniform style. Bottom views are shown throughout. Terminal designations are as follows:

A = Anode
BP = Bayonet Pin
D = Deflecting Plate
F = Filament
G = Grid
H = Heater
IC = Internal Connection
IS = Internal Shield
K = Cathode
NC = No Connection
P = Plate (Anode)
P_1 = Starter-Anode
PBF = Beam-Forming Plates
RC = Ray-Control Electrode
S = Shell
TA = Target
● = Gas-Type Tube
U = Unit
SH = Internal Shield

Alphabetical subscripts D, P, T and HX indicate, respectively, diode unit, pentode unit, triode unit or hexode unit in multi-unit types. Subscript M, T or CT indicates filament or heater tap.

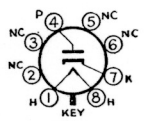

FIG. 1

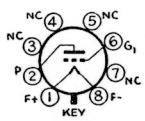

FIG. 2

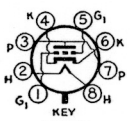

FIG. 3

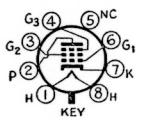

FIG. 4

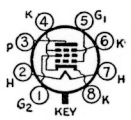

FIG. 5

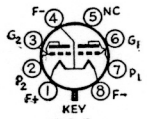

FIG. 6

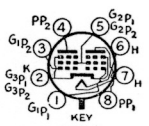

FIG. 7

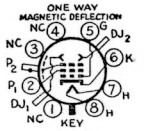

FIG. 8

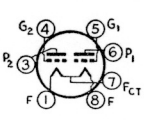

FIG. 9

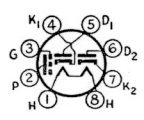

FIG. 10

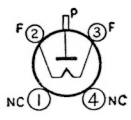

FIG. 11

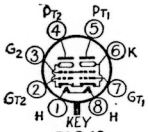

FIG. 12

SUPPLEMENTARY BASE DIAGRAMS

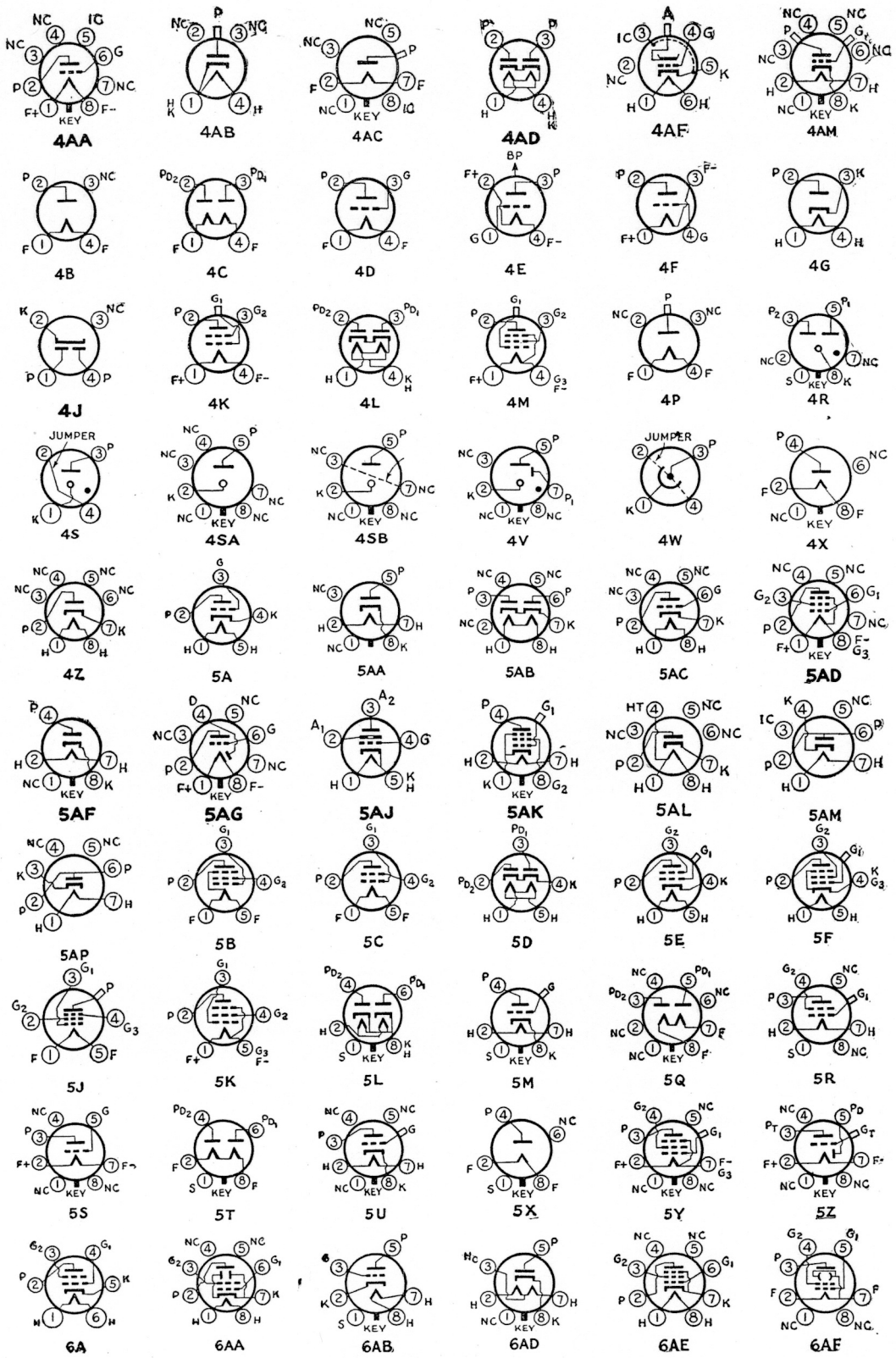

RECEIVING TUBE DIAGRAMS

Bottom views are shown. Terminal designations on sockets are given on page 437.

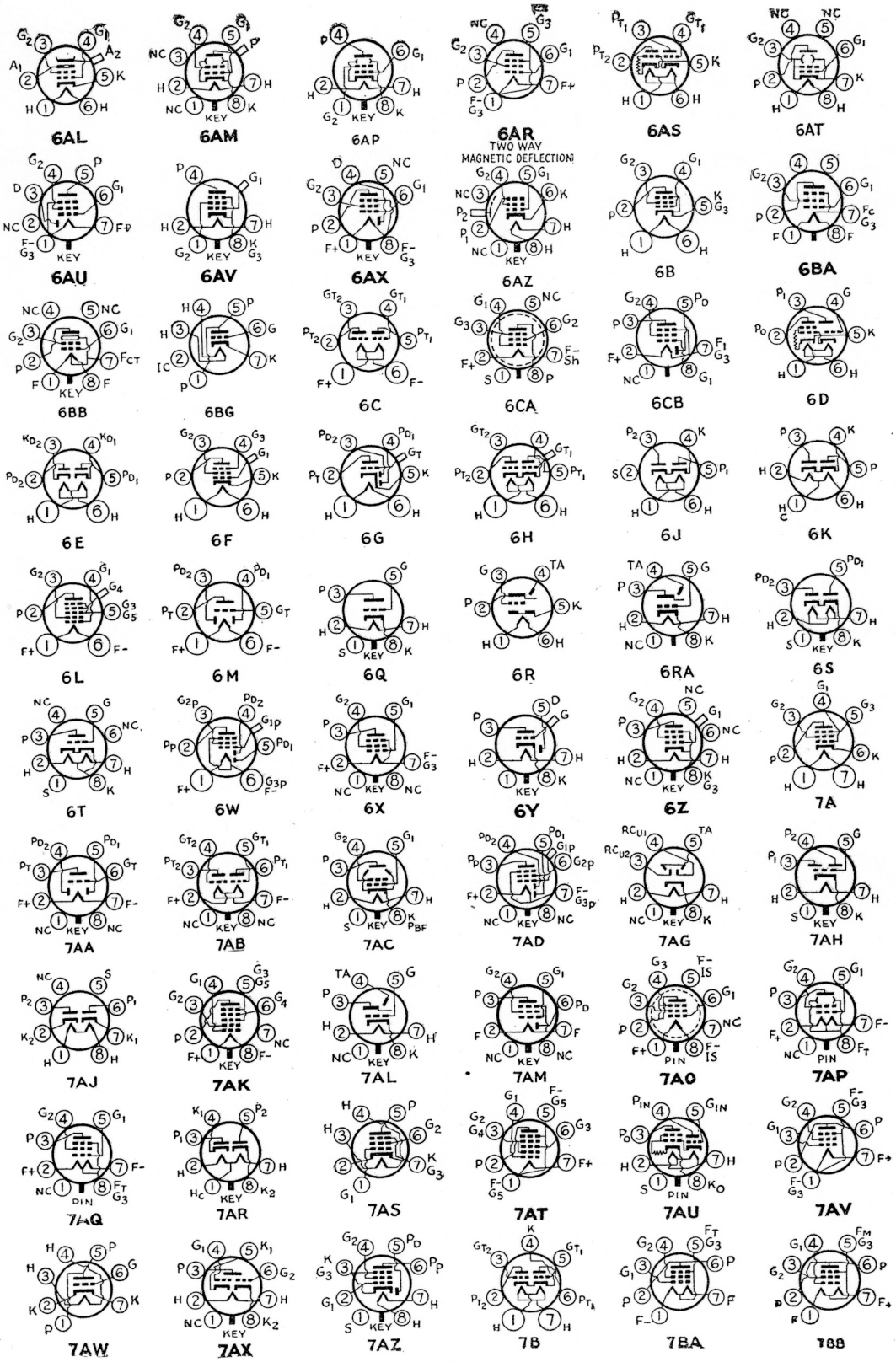

RECEIVING TUBE DIAGRAMS

Bottom views are shown. Terminal designations on sockets are given on page 437.

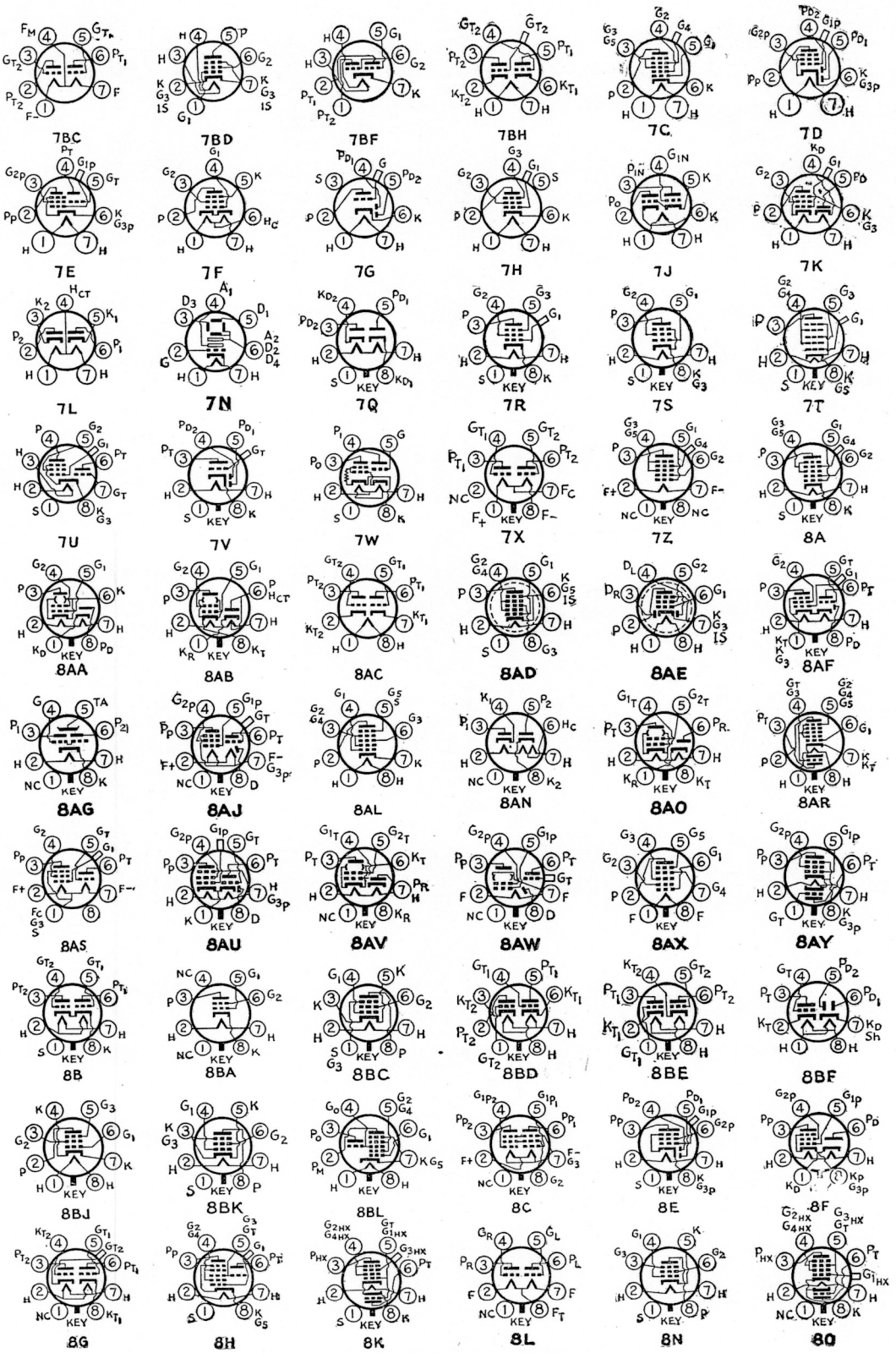

RECEIVING TUBE DIAGRAMS

Bottom views are shown. Terminal designations on sockets are given on page 437.

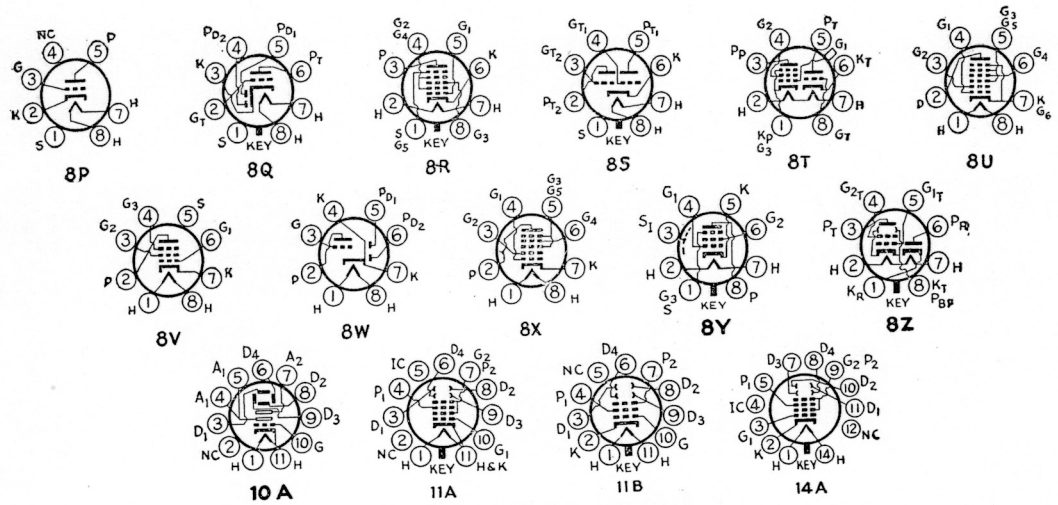

RECEIVING TUBE DIAGRAMS

Bottom views are shown. Terminal designations on sockets are given on page 437.

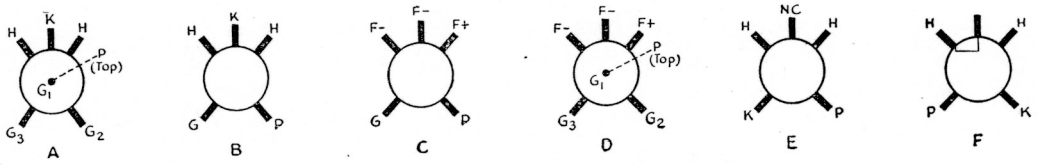

SOCKET CONNECTIONS FOR ACORN TUBES

Bottom views — looking at short end.

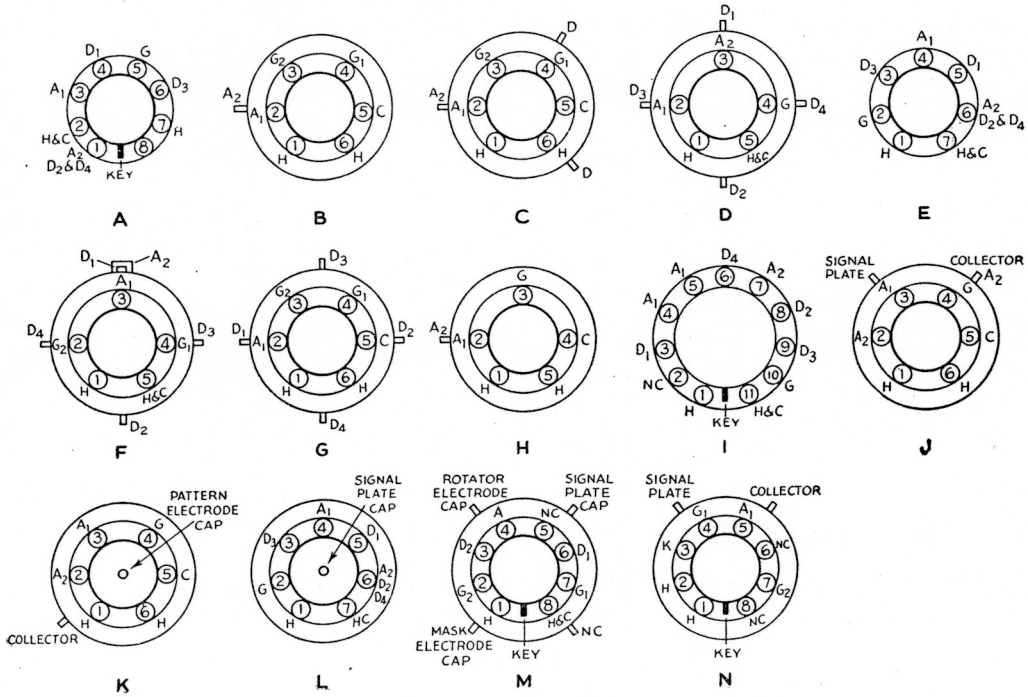

SOCKET CONNECTIONS FOR CATHODE-RAY TUBES

H denotes heater; C, cathode; G, grid; A, anode; D, deflecting plate; Coll, collector. Inner rings of base diagram indicate socket connections; connections on outer ring indicate bulb cap-type terminals. Views are from bottoms of tubes. In Diagrams J and N, signal plate cap and collector cap are located on bulb behind mosaic.

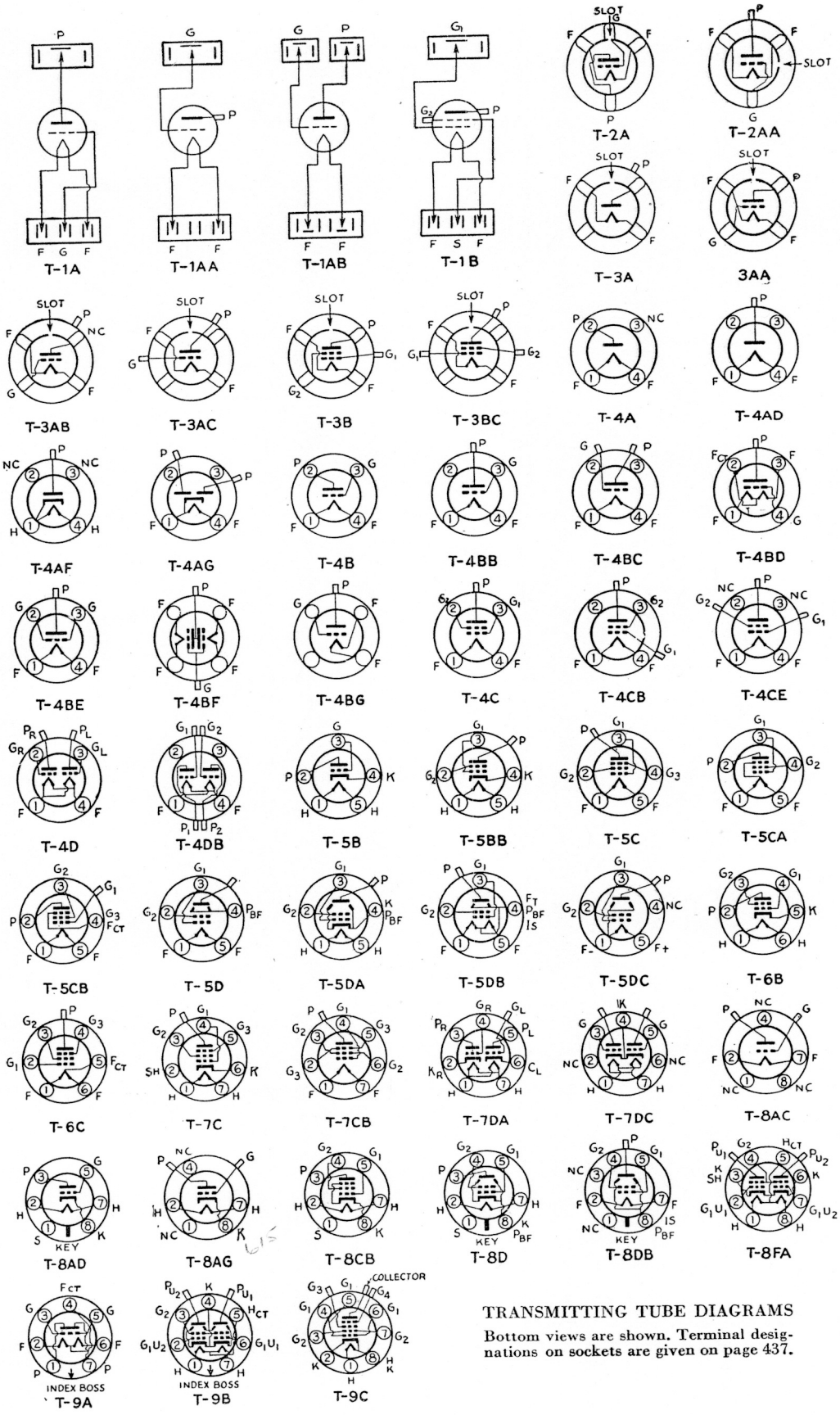

TRANSMITTING TUBE DIAGRAMS

Bottom views are shown. Terminal designations on sockets are given on page 437.

TABLE I — METAL RECEIVING TUBES

Characteristics given in this table apply to all tubes having type numbers shown, including metal tubes, glass tubes with "G" suffix, and bantam tubes with "GT" suffix. For "G" and "GT" tubes not listed (not having metal counterparts), see Tables II, VII, VIII and IX.

Type	Name	Socket Connections [1]	Cathode	Fil. or Heater Volts	Fil. or Heater Amps.	Use	Plate Supply Volts	Grid Bias	Screen Volts	Screen Current Ma.	Plate Current Ma.	Plate Resistance, Ohms	Transconductance Micromhos	Amp. Factor	Load Resistance Ohms	Power Output Watts	Type
6A8	Pentagrid Converter	8A	Htr.	6.3	0.3	Osc.-Mixer	250	− 3.0	100	3.2	3.3	Anode-grid (No. 2) 250 volts max. thru 20,000-ohms					6A8
6AB7 1853	Television Amp. Pentode	8N	Htr.	6.3	0.45	Class-A Amplifier	300	− 3.0	200 [2]	3.2	12.5	700000	5000	3500	—	—	6AB7 1853
6AC7 1852	Television Amp. Pentode	8N	Htr.	6.3	0.45	Class-A Amplifier	300	− 2.0 [4]	150 [2]	2.5	10	750000	9000	6750	—	—	6AC7 1852
6AG7	Video Beam Power Amp.	8Y	Htr.	6.3	0.65	Class-A$_1$ Amplifier [5]	250	− 2.0	140	8.5	33	100000	7700	—	1700	—	6AG7
6B8	Duplex-Diode Pentode	8E	Htr.	6.3	0.3	Class-A Amplifier	250	− 3.0	125	2.3	9.0	650000	1125	730	—	—	6B8
6C5	Triode Detector, Amplifier	6Q	Htr.	6.3	0.3	Class-A Amplifier	250	− 8.0	—	—	8.0	10000	2000	20	—	—	6C5
						Bias Detector	250	−17.0	—	—	Plate current adjusted to 0.2 ma. with no signal						
6F5	High-μ Triode	5M	Htr.	6.3	0.3	Class-A Amplifier	250	− 1.3	—	—	0.2	66000	1500	100	—	—	6F5
6F6	Pentode Power Amplifier	7S	Htr.	6.3	0.7	Class-A Pentode	250	−16.5	250	6.5	34	80000	2500	200	7000	3.0	6F6
							315	−22.0	315	8.0	42	75000	2650	200	7000	5.0	
						Class-A Triode [3]	250	−20.0	—	—	31	2600	2700	7.0	4000	0.85	
						Push-Pull Class-AB Pentode Triode Connection [3]	375	−26.0	250	2.5	17	Power output for 2 tubes at stated load, plate-to-plate			10000	19.0	
							350	−38.0	—		22.5				6000	18.0	
6H6	Twin Diode	7Q	Htr.	6.3	0.3	Rectifier	Max. a.c. voltage per plate = 100 r.m.s. Max. output current 4.0 ma. d.c.										6H6
6J5	Detector Amplifier Triode	6Q	Htr.	6.3	0.3	Class-A Amplifier	250	− 8.0	—	—	9	7700	2600	20	—	—	6J5
6J7	Triple-Grid Detector, Amplifier	7R	Htr.	6.3	0.3	R.F. Amplifier	250	− 3.0	100	0.5	2.0	1.5 meg.	1225	1500	—	—	6J7
						Bias Detector	250	− 4.3	100	Cathode current 0.43 ma.					0.5 meg.	—	
6K7	Triple-Grid Variable-μ Amplifier	7R	Htr.	6.3	0.3	R.F. Amplifier	250	− 3.0	125	2.6	10.5	600000	1650	990	—	—	6K7
						Mixer	250	−10.0	100	—	—	—	Oscillator peak volts = 7.0				
6K8	Triode Hexode Converter	8K	Htr.	6.3	0.3	Osc.-Mixer	250	− 3.0	100	6	2.5	Triode Plate (No. 2) 100 volts, 3.8 ma.					6K8
6L6	Beam Power Amplifier	7AC	Htr.	6.3	0.9	Single-Tube A$_1$ [6] Cathode Bias	250	— [7]	250	5.4–7.2	75–78	—	—	—	2500	6.5	6L6
							300	— [8]	200	3.0–4.6	51–54.5	—	—	—	4500	6.5	
						Single-Tube A$_1$ [6] Fixed Bias	250	−14.0	250	5.0–7.3	72–79	22500	6000	—	2500	6.5	
							350	−18.0	250	2.5–7.0	54–66	33000	5200	—	4200	10.8	
						Push-Pull A$_1$ [6] Cathode Bias	270	— [9]	270	11–17	134–145	—	—	—	5000	18.5	
						Push-Pull A$_1$ [6] Fixed Bias	250	−16.0	250	10–16	120–140	24500	5500	—	5000	14.5	
							270	−17.5	270	11–17	134–155	23500	5700	—	5000	17.5	
						Push-Pull AB$_1$ [6] Cathode Bias	360	— [10]	270	5–17	88–100	Power output for 2 tubes. Load plate-to-plate			9000	24.5	
						Push-Pull AB$_1$ [6] Fixed Bias	360	−22.5	270	5–15	88–132				6600 [11]	26.5	
						Push-Pull AB$_2$ [6] Fixed Bias	360	−18.0	225	3.5–11	78–142				6000	31.0	
							360	−22.5	270	5–16	88–205				3800	47.0	
6L7	Pentagrid Mixer Amplifier	7T	Htr.	6.3	0.3	R.F. Amplifier	250	− 3.0	100	5.5	5.3	800000	1100	—	—	—	6L7
						Mixer	250	− 6.0	150	8.3	3.3	Over 1 meg.	Oscillator-grid (No. 3) voltage = −15.0				
6N7	Twin Triode	8B	Htr.	6.3	0.8	Class-B Amplifier	300	0	—	—	35-70	—	—	—	8000	10.0	6N7
6Q7	Duplex-Diode Triode	7V	Htr.	6.3	0.3	Triode Amplifier	250	− 3.0	—	—	1.1	58000	1200	70	—	—	6Q7
6R7	Duplex-Diode Triode	7V	Htr.	6.3	0.3	Triode Amplifier	250	− 9.0	—	—	9.5	8500	1900	16	10000	0.28	6R7
6S7	Triple-Grid Variable-μ	7R	Htr.	6.3	0.15	Class-A Amplifier	250	− 3.0	100	2.0	8.5	1000000	1750	1750	—	—	6S7
6SA7	Pentagrid Converter	8R [12]	Htr.	6.3	0.3	Osc.-Mixer	250	0 [13]	100	8.0	3.4	800000	Grid No. 1 Resistor 20000 ohms				6SA7
6SC7	Twin Triode Amplifier	8S	Htr.	6.3	0.3	Class-A Amplifier	250	− 2.0	—	—	2.0	53000	1325	70	—	—	6SC7
6SF5	High-μ Triode	6AB	Htr.	6.3	0.3	Class-A Amplifier	250	− 2.0	—	—	0.9	66000	1500	100	—	—	6SF5
6SF7	Diode Variable-μ Pentode	7AZ	Htr.	6.3	0.3	Class-A Amplifier	250	− 1.0	100	3.3	12.4	700000	2050	—	—	—	6SF7

TABLE I—METAL RECEIVING TUBES—*Continued*

Type	Name	Socket Connections [1]	Cathode	Fil. or Heater Volts	Fil. or Heater Amps.	Use	Plate Supply Volts	Grid Bias	Screen Volts	Screen Current Ma.	Plate Current Ma.	Plate Resistance, Ohms	Transconductance Micromhos	Amp. Factor	Load Resistance Ohms	Power Output Watts	Type
6SG7	Triple-Grid Semi-Variable-μ	8BK	Htr.	6.3	0.3	H. F. Amplifier	250	− 2.5	150	3.4	9.2	Over 1 meg.	4000	——	——	——	6SG7
6SH7	Triple-Grid Amplifier	8BK	Htr.	6.3	0.3	H. F. Amplifier	250	− 1.0	150	4.1	10.8	900000	4900	——	——	——	6SH7
6SJ7	Triple-Grid Amplifier	8N	Htr.	6.3	0.3	Class-A Amplifier	250	− 3.0	100	0.8	3	1500000	1650	2500	——	——	6SJ7
6SK7	Triple-Grid Variable-μ	8N	Htr.	6.3	0.3	Class-A Amplifier	250	− 3.0	100	2.4	9.2	800000	2000	1600	——	——	6SK7
6SQ7	Duplex-Diode Triode	8Q	Htr.	6.3	0.3	Class-A Amplifier	250	− 2.0	——	——	0.8	91000	1100	100	——	——	6SQ7
6SR7	Duplex-Diode Triode	8Q	Htr.	6.3	0.3	Class-A Amplifier	250	− 9.0	——	——	9.5	8500	1900	16	——	——	6SR7
6SS7	Triple-Grid Variable-μ	8N	Htr.	6.3	0.15	Class-A Amplifier	250	− 3.0	100	2.0	9.0	1000000	1850	——	——	——	6SS7
6ST7	Duplex-Diode Triode	8Q	Htr.	6.3	0.15	Class-A Amplifier	250	− 9.0	——	——	9.5	8500	1900	16	——	——	6ST7
6T7	Duplex-Diode Triode	7V	Htr.	6.3	0.15	Class-A Amplifier	250	− 3.0	——	——	1.2	62000	1050	65	——	——	6T7
6V6	Beam Power Amplifier	7AC	Htr.	6.3	0.45	Class-A Amplifier	250	−12.5	250	4.5/7.0	45–47	52000	4100	218	5000	4.5	6V6
						Class-AB Amplifier 2 Tubes	250	−15.0	250	5/13	70–79	60000	3750	——	10000	10.0	
							285	−19.0	285	4/13.5	70–92	65000	3600	——	8000	14.0	
1611	Pentode Power Amplifier	7S	Htr.	6.3	0.7	Relay Tube	Characteristics same as 6F6										1611
1612	Pentagrid Amplifier	7T	Htr.	6.3	0.3	Class-A Amplifier	250	− 3.0	100	6.5	5.3	600000	1100	880	——	——	1612
1620	Triple-Grid Det.-Amp.	7R	Htr.	6.3	0.3	Class-A Amplifier	Characteristics same as 6J7										1620
1621	Power Amplifier Pentode	7S	Htr.	6.3	0.7	Class-A, Pentode P. P.	300	−30.0	300	6.5/13	38/69	——	——	——	4000	5.0	1621
						Class-A Triode [3] P. P.	327.5	−27.5 [14]	——	——	55/59	——	——	——	5000	2.0	
1622	Beam Power Amplifier	7AC	Htr.	6.3	0.9	Class-A Amplifier	300	−20.0	250	4/10.5	86/125	——	——	——	4000	10.0	1622
1851	Television Amp. Pentode	7R	Htr.	6.3	0.45	Class-A Amplifier	300	− 2.0 [4]	150 [2]	2.5	10	750000	9000	6750	——	——	1851

[1] See Receiving Tube Diagrams.
[2] From fixed screen supply. If series resistor from plate supply is used, value for 6AB7/1853 is 30,000 ohms, for 6AC7/1852 and 1851 60,000 ohms. Series resistor gives variable-μ characteristic, fixed screen supply gives sharp cut-off.
[3] Screen tied to plate.
[4] Cathode bias resistor should be adjusted for plate current of 10 ma.; minimum value 160 ohms.
[5] Typical operation for 4-Mc. bandwidth video voltage amplifier; 70 volts output with 4 volts input.
[6] Subscript 1 indicates no grid-current flow. Subscript 2 indicates grid-current flow over part of input cycle.
[7] Cathode resistor 170 ohms.
[8] Cathode resistor 220 ohms.
[9] Cathode resistor 125 ohms.
[10] Cathode resistor 250 ohms.
[11] Output 18 watts with 3800-ohm load.
[12] For 6SA7GT, use Base Diagram 8AD.
[13] Grid bias −2 volts if separate oscillator excitation is used.
[14] Cathode resistor 500 ohms.

TABLE II—6.3-VOLT GLASS TUBES WITH OCTAL BASES

(For "G" and "GT" -Type Tubes Not Listed Here, See Equivalent Type in Table I; Characteristics and Connections Will Be Identical)

Type	Name	Socket Connections [1]	Cathode	Fil. or Heater Volts	Fil. or Heater Amps.	Use	Plate Supply Volts	Grid Bias	Screen Volts	Screen Current Ma.	Plate Current Ma.	Plate Resistance, Ohms	Transconductance Micromhos	Amp. Factor	Load Resistance Ohms	Power Output Watts	Type
2C22	Triode Amplifier	4AM	Htr.	6.3	0.3	Class-A Amplifier	300	−10.5	——	——	11	6600	3000	20	——	——	2022
6A5G	Triode Power Amplifier	6T	Htr.	6.3	1.0	Class-A Amplifier	250	−45.0	——	——	60	800	5250	4.2	2500	3.75	6A5G
						Push-Pull Class AB	325	−68.0	——	——	80 [2]	——		——	3000	15.0	
						Push-Pull Class AB	325	850 Ohm Cathode Resistor			80 [2]	——		——	5000	10.0	
6AB6G	Direct-Coupled Amplifier	7W	Htr.	6.3	0.5	Class-A Amplifier	250	0	Input		5.0	40000	1800	72	8000	3.5	6AB6G
							250	0	Output		34						
6AC5G	High-μ Power Amplifier Triode	6Q	Htr.	6.3	0.4	Push-Pull Class-B	250	0	——	——	5.0 [2]	36700	3400	125	10000	8.0	6AC5G
						Dynamic-Coupled Amp.	250	——	——	——	32				7000	3.7	
6AC6G	Direct-Coupled Amplifier	7W	Htr.	6.3	1.1	Class-A Amplifier	180	0	Input		7.0	——	3000	54	4000	3.8	6AC6G
							180	0	Output		45						
6AD5G	High-μ Triode	6Q	Htr.	6.3	0.3	Class-A Amplifier	250	− 2.0	——	——	0.9	——	1500	100	——	——	6AD5G
6AD6G	Electron-Ray Tube	7AG	Htr.	6.3	0.15	Indicator Tube	100	0 for 90°; −23 for 135°; 45 for 0°. Target current 1.5 ma.									6AD6G
6AD7G	Triode-Pentode	8AY	Htr.	6.3	0.85	Triode Amplifier	250	−25.0	——	——	4.0	19000	325	6.0	——	——	6AD7G
						Pentode Amplifier	250	−16.5	250	6.5	34	80000	2500	——	7000	3.2	

TABLE II — 6.3-VOLT GLASS TUBES WITH OCTAL BASES — *Continued*

Type	Name	Socket Connections[1]	Cathode	Fil. or Heater Volts	Fil. or Heater Amps.	Use	Plate Supply Volts	Grid Bias	Screen Volts	Screen Current Ma.	Plate Current Ma.	Plate Resistance, Ohms	Transconductance Micromhos	Amp. Factor	Load Resistance Ohms	Power Output Watts	Type
6AE5G	Triode Amplifier	6Q	Htr.	6.3	0.3	Class-A Amplifier	95	−15.0	—	—	7.0	3500	1200	4.2	—	—	6AE5G
6AE6G	Twin-Plate Triode	7AH	Htr.	6.3	0.15	Indicator Control	250	− 1.5	—	—	6.5[4]	25000	1000	25	—	—	6AE6G
							250	− 1.5	—	—	4.5[5]	35000	950	33			
6AE7GT	Twin-Input Triode[7]	7AX	Htr.	6.3	0.5	Driver Amplifier	250	−13.5	—	—	5.0	9300	1500	14	—	—	6AE7GT
6AF5G	Triode Amplifier	6Q	Htr.	6.3	0.3	Class-A Amplifier	180	−18.0	—	—	7.0	—	1500	7.4	—	—	6AF5G
6AF6G	Electron-Ray Tube	7AG	Htr.	6.3	0.15	Indicator Tube	100	0 for 100°; 60 for 0°. Target current 0.9									6AF6G
6AF7G	Twin Electron Ray	8AG	Htr.	6.3	0.3	Indicator Tube											6AF7G
6AG6G	Power Amplifier Pentode	7S	Htr.	6.3	1.25	Class-A Amplifier	250	− 6.0	250	6.0	32	—	10000	—	8500	3.75	6AG6G
6AH5G	Beam Power Amplifier	6AP	Htr.	6.3	0.9	Class-A Amplifier	350	−18	250	—	—	33000	5200	—	4200	10.8	6AH5G
6AH7GT	Twin Triode	8BE	Htr.	6.3	0.3	Converter and Amp.	250	− 9.0	—	—	12[3]	6600	2400	16	—	—	6AH7GT
6AL6G	Beam Power Amplifier	6AM	Htr.	6.3	0.9	Class-A Amplifier	250	−14.0	250	5.0	72	22500	6000	—	2500	6.5	6AL6G
6B4G	Triode Power Amplifier	5S	Fil.	6.3	1.0	Power Amplifier	Characteristics same as Type 6A3 — Table IV							—	—	—	6B4G
6B6G	Duplex-Diode High-μ Triode	7V	Htr.	6.3	0.3	Detector-Amplifier	Characteristics same as Type 75 — Table IV							—	—	—	6B6G
6C8G	Twin Triode	8G	Htr.	6.3	0.3	Amp. 1 Section	250	− 4.5	—	—	3.1	26000	1450	38	—	—	6C8G
6D8G	Pentagrid Converter	8A	Htr.	6.3	0.15	Converter	250	− 3.0	100	Cathode current 13.0 Ma.		Anode grid (No. 2) Volts = 250[9]					6D8G
6E8G	Triode-Hexode Converter	8O	Htr.	6.3	0.3	Osc.-Mixer	250	− 2.0	Triode Plate 150 volts								6E8G
6F8G	Twin Triode	8G	Htr.	6.3	0.6	Amplifier	250	− 8.0	—	—	9[3]	7700	2600	20	—	—	6F8G
6G6G	Pentode Power Amplifier	7S	Htr.	6.3	0.15	Class-A Amplifier	180	− 9.0	180	2.5	15	175000	2300	400	10000	1.1	6G6G
6H4GT	Diode Rectifier	5AF	Htr.	6.3	0.15	Detector	100	—	—	—	4.0	—	—	—	—	—	6H4GT
6H8G	Duo-Diode High-μ Pentode	8E	Htr.	6.3	0.3	Class-A Amplifier	250	− 2.0	100	—	8.5	650000	2400	—	—	—	6H8G
6J8G	Triode Heptode	8H	Htr.	6.3	0.3	Converter	250	− 3.0	100	2.8	1.2	Anode-grid (No. 2) 250 volts max.[9] 5 ma.					6J8G
6K5G	High-μ Triode	5U	Htr.	6.3	0.3	Class-A Amplifier	250	− 3.0	—	—	1.1	50000	1400	70	—	—	6K5G
6K6G	Pentode Power Amplifier	7S	Htr.	6.3	0.4	Class-A Amplifier	Characteristics same as Type 41 — Table IV										6K6G
6L5G	Triode Amplifier	6Q	Htr.	6.3	0.15	Class-A Amplifier	250	− 9.0	—	—	8.0	—	1900	17	—	—	6L5G
6M6G	Power Amplifier Pentode	7S	Htr.	6.3	1.2	Class-A Amplifier	250	− 6.0	250	4.0	36	—	9500	—	7000	4.4	6M6G
6M7G	Triple-Grid Amplifier	7R	Htr.	6.3	0.3	R. F. Amplifier	250	− 2.5	125	2.8	10.5	900000	3400	—	—	—	6M7G
6M8GT	Diode Triode Pentode	8AU	Htr.	6.3	0.6	Triode Amplifier	100	—	—	—	0.5	91000	1100	—	—	—	6M8GT
						Pentode Amplifier	100	− 3.0	100	—	8.5	200000	1900	—	—	—	
6N6G	Direct-Coupled Amplifier	7AU	Htr.	6.3	0.8	Power Amplifier	Characteristics same as Type 6B5—Table IV							—	—	—	6N6G
6P5G	Triode Amplifier	6Q	Htr.	6.3	0.3	Class-A Amplifier	250	−13.5	—	—	5.0	9500	1450	13.8	—	—	6P5G
6P7G	Triode-Pentode	7U	Htr.	6.3	0.3	Class-A Amplifier	Characteristics same as 6F7—Table IV										6P7G
6P8G	Triode-Hexode Converter	8K	Htr.	6.3	0.8	Osc.-Mixer	250	− 2.0	75	1.4	1.5	Triode Plate 100 v. 2.2 ma.					6P8G
6Q6G	Diode-Triode	6Y	Htr.	6.3	0.15	Class-A Amplifier	250	− 3.0	—	—	1.2	—	1050	65	—	—	6Q6G
6R6G	Pentode Amplifier	6AA	Htr.	6.3	0.3	Class-A Amplifier	250	− 3.0	100	1.7	7.0	—	1450	1160	—	—	6R6G
6S6GT	Triple-Grid Variable-μ	5AK	Htr.	6.3	0.45	R.F. Amplifier	250	− 2.0	100	3.0	13	350000	4000	—	—	—	6S6GT
6SD7GT	Triple-Grid Semi-Variable-μ	8N	Htr.	6.3	0.3	R.F. Amplifier	250	− 2.0	100	1.9	6.0	1000000	3600	—	—	—	6SD7GT
6SE7GT	Triple-Grid Amplifier	8N	Htr.	6.3	0.3	R.F. Amplifier	250	− 1.5	100	1.5	4.5	1100000	3400	3750	—	—	6SE7GT
6SL7GT	Twin Triode	8BD	Htr.	6.3	0.3	Amplifier	250	− 2.0	—	—	2.3[3]	44000	1600	70	—	—	6SL7GT
6SN7GT	Twin Triode	8BD	Htr.	6.3	0.3	Amplifier	250	− 8.0	—	—	9.0[3]	7700	2600	20	—	—	6SN7GT
6T6GM[8]	Triple-Grid Amplifier	6Z	Htr.	6.3	0.45	R.F. Amplifier	250	− 1.0	100	2.0	10	1000000	5500	—	—	—	6T6GM
6U6GT	Beam Power Amplifier	7AC	Htr.	6.3	0.75	Class-A Amplifier	200	−14.0	135	3.0	56	20000	6200	—	3000	5.5	6U6GT
6U7G	Triple Grid Variable-μ	7R	Htr.	6.3	0.3	R.F. Amplifier	Characteristics same as Type 6D6 — Table III										6U7G
6V7G	Duplex Diode-Triode	7V	Htr.	6.3	0.3	Detector-Amplifier	Characteristics same as Type 85 — Table III										6V7G
6W6GT	Beam Power Amplifier	7AC	Htr.	6.3	1.25	Class-A Amplifier	135	− 9.5	135	12.0	61.0	—	9000	215	2000	3.3	6W6GT

TABLE II — 6.3-VOLT GLASS TUBES WITH OCTAL BASES — *Continued*

Type	Name	Socket Connections [1]	Cathode	Fil. or Heater Volts	Fil. or Heater Amps.	Use	Plate Supply Volts	Grid Bias	Screen Volts	Screen Current Ma.	Plate Current Ma.	Plate Resistance, Ohms	Transconductance Micromhos	Amp. Factor	Load Resistance Ohms	Power Output Watts	Type
6W7G	Triple-Grid Det. Amp.	7R	Htr.	6.3	0.15	Class-A Amplifier	250	— 3.0	100	2.0	0.5	1500000	1225	1850	—	—	6W7G
6X6G	Electron-Ray Tube	7AL	Htr.	6.3	0.3	Indicator Tube	250	0 v. for 300°, 2 ma. —8 v. for 0°, 0 ma. Vane grid 135 v.									6X6G
6Y6G	Beam Power Amplifier	7AC	Htr.	6.3	1.25	Class-A Amplifier	135	—13.5	135	3.0	60.0	9300	7000	—	2000	3.6	6Y6G
6Y7G	Twin Triode Amplifier	8B	Htr.	6.3	0.3	Class-B Amplifier	Characteristics same as Type 79 — Table IV										6Y7G
6Z7G	Twin Triode Amplifier	8B	Htr.	6.3	0.3	Class-B Amplifier	180	0	—	—	8.4 [2]	—	—	—	12000	4.2	6Z7G
							135	0	—	—	6.0 [2]	—	—	—	9000	2.5	
1223	Pentode Amplifier	7R	Htr.	6.3	0.3	Class-A Amplifier	Characteristics same as 6C6 — Table IV										1223
1231	Pentode Amplifier	8V	Htr.	6.3	0.45	Class-A Amplifier	300	— 2.5 [8]	150	2.5	10	700000	5500	3850	—	—	1231
1635	Twin Triode Amplifier	8B	Htr.	6.3	0.6	Class-B Amplifier	400	— 0	—	—	10 [2]/63	—	—	—	14000	17	1635
1642/ 2C21	Twin-Triode Amplifier	7BH	Htr.	6.3	0.6	Class-A Amplifier	250	—16.5	—	—	8.3	7600	1375	10.4	—	—	1642/ 2C21
7000	Low-Noise Amplifier	7R	Htr.	6.3	0.3	Class-A Amplifier	Characteristics same as Type 6J7 — Table I										7000

[1] Refer to Receiving Tube Diagrams. No connection to Pin No. 1.
[2] No-signal value for 2 tubes.
[3] Per plate.
[4] Plate No. 1, remote cut-off.
[5] Plate No. 2, sharp cut-off.
[6] Through 200-ohm cathode resistor.
[7] Common plate.
[8] Metal-sprayed glass envelope.
[9] Through 20,000-ohm dropping resistor.

TABLE III — 7-VOLT LOKTAL-BASE TUBES

For other loktal-base types see Tables VIII, IX, X and XIII.

Type	Name	Socket Connections	Cathode	Heater * Volts	Heater * Amps.	Use	Plate Supply Volts	Grid Bias	Screen Volts	Screen [1] Current Ma.	Plate [1] Current Ma.	Plate Resistance, Ohms	Transconductance Micromhos	Amp. Factor	Load Resistance Ohms	Power Output Watts	Type
7A4	Triode Amplifier	5 AC	Htr.	7.0	0.32	Class-A Amplifier	250	— 8.0	—	—	9.0	7700	2600	20	—	—	7A4
7A5	Beam Power Amplifier	6 AT	Htr.	7.0	0.75	Class-A Amplifier	125	— 9.0	125	3.2/8	37.5/40	17000	6100	—	2700	1.9	7A5
7A6	Twin Diode	7 AJ	Htr.	7.0	0.16	Rectifier	Max. A.C. volts per plate — 150. Max. Output current — 10 ma.										7A6
7A7	Remote Cut-off Pentode	8 V	Htr.	7.0	0.32	R.F. Amplifier	250	— 3.0	100	2.0	8.6	800000	2000	1600	—	—	7A7
7A8	Multigrid Converter	8 U	Htr.	7.0	0.16	Osc.-Mixer	250	— 3.0	100	3.1	3.0	50000	Anode-grid 250 volts max.[2]				7A8
7B4	High-μ Triode	5 AC	Htr.	7.0	0.32	Class-A Amplifier	250	— 2.0	—	—	0.9	66000	1500	100	—	—	7B4
7B5	Pentode Power Amplifier	6 AE	Htr.	7.0	0.43	Class-A Amplifier	250	—18.0	250	5.5/10	32/33	68000	2300	—	7600	3.4	7B5
7B6	Duo-Diode Triode	8 W	Htr.	7.0	0.32	Class-A Amplifier	250	— 2.0	—	—	1.0	91000	1100	100	—	—	7B6
7B7	Remote Cut-off Pentode	8 V	Htr.	7.0	0.16	R.F. Amplifier	250	— 3.0	100	2.0	8.5	700000	1700	1200	—	—	7B7
7B8	Pentagrid Converter	8 X	Htr.	7.0	0.32	Osc.-Mixer	250	— 3.0	100	2.7	3.5	360000	Anode-grid 250 volts max.[2]				7B8
7C5	Tetrode Power Amplifier	6 AA	Htr.	7.0	0.48	Class-A Amplifier	250	—12.5	250	4.5/7	45/47	52000	4100	—	5000	4.5	7C5
7C6	Duo-Diode Triode	8 W	Htr.	7.0	0.16	Class-A Amplifier	250	— 1.0	—	—	1.3	100000	1000	100	—	—	7C6
7C7	Pentode Amplifier	8 V	Htr.	7.0	0.16	R.F. Amplifier	250	— 3.0	100	0.5	2.0	2 meg.	1300	—	—	—	7C7
7D7	Triode-Hexode Converter	8 AR	Htr.	7.0	0.48	Osc.-Mixer	250	— 3.0	Triode Plate (No. 3) 150 v. 3.5 ma.								7D7
7E6	Duo-Diode Triode	8 W	Htr.	7.0	0.32	Class-A Amplifier	250	— 9.0	—	—	9.5	8500	1900	16	—	—	7E6
7E7	Duo-Diode Pentode	8W	Htr.	7.0	0.32	Class-A Amplifier	250	— 3.0	100	1.6	7.5	700000	1300	—	—	—	7E7
7F7	Twin Triode	8AC	Htr.	7.0	0.32	Class-A Amplifier [3]	250	— 2.0	—	—	2.3	44000	1600	70	—	—	7F7
7G7/ 1232	Triple-Grid Amplifier	8 V	Htr.	7.0	0.48	Class-A Amplifier	250	— 2.0	100	2.0	6.0	800000	4500	—	—	—	7G7/ 1232
7H7	Triple-Grid Semi-Variable-μ	8 V	Htr.	7.0	0.32	R.F. Amplifier	250	— 2.5	150	2.5	9.0	1000000	3500	—	—	—	7H7
7J7	Triode-Hexode Converter	8 AR	Htr.	7.0	0.32	Osc.-Mixer	250	— 3.0	100	2.9	1.3	Triode Plate 250 v. Max.[2]					7J7
7K7	Duo-Diode High-μ Triode	8BF	Htr.	7.0	0.32	Class-A Amplifier	250	— 2.0	—	—	2.3	44000	1600	70	—	—	7K7
7L7	Triple-Grid Amplifier	8 V	Htr.	7.0	0.32	Class-A Amplifier	250	— 1.5	100	1.5	4.5	100000	3100	Cathode Resistor 250 ohms			7L7

TABLE III — 7-VOLT LOKTAL-BASE TUBES — *Continued*

Type	Name	Socket Connections	Cathode	Heater Volts	Heater Amps.	Use	Plate Supply Volts	Grid Bias	Screen Volts	Screen[1] Current Ma.	Plate[1] Current Ma.	Plate Resistance, Ohms	Transconductance Micromhos	Amp. Factor	Load Resistance Ohms	Power Output Watts	Type
7N7	Twin Triode	8AC	Htr.	7.0	0.6	Class-A Amplifier[3]	250	— 8.0	——	——	9.0	7700	2600	20	——	——	7N7
7Q7	Pentagrid Converter	8AL	Htr.	7.0	0.32	Osc.-Mixer	250	0	100	8.0	3.4	800000	Grid No. 1 resistor 20000 ohms				7Q7
7R7	Duo-Diode Pentode	8AE	Htr.	7.0	0.32	Class-A Amplifier	250	— 1.0	100	1.7	5.7	1000000	3200	——	——	——	7R7
7S7	Triode Hexode Converter	8AR	Htr.	7.0	0.32	Osc.-Mixer	250	— 2.0	100	2.2	1.7	2000000	Triode Plate 250 v. Max.[2]				7S7
7T7	Triple-Grid Amplifier	8V	Htr.	7.0	0.32	Class-A Amplifier	250	— 1.0	150	4.1	10.8	900000	4900	——	——	——	7T7
7W7	Triple-Grid Variable-μ	8BJ	Htr.	7.0	0.48	Class-A Amplifier	300	— 2.2	150	3.9	10	300000	5800	——	——	——	7W7
7V7	Triple-Grid Amplifier	8V	Htr.	7.0	0.48	Amplifier	300	——[4]	150[5]	3.9	9.6	300000	5800	——	——	——	7V7
XXL	Triode Oscillator	5AC	Htr.	7.0	0.32	Oscillator	250	— 8.0	——	——	8.0	——	2300	20	——	——	XXL

* Maximum rating, corresponding to 130-volt line condition; normal rating is 6.3 v. for 117-v. line.

[1] Values to left of diagonal lines are for "no-signal" condition; values to right are "with signal." [2] Applied through 20000-ohm dropping resistor. [3] Each triode. [4] Cathode bias resistor, 160 ohms.
[5] From fixed screen supply. If series resistor from plate supply is used, value should be 40,000 ohms. Series resistor gives extended cut-off (variable-μ) characteristic, fixed screen supply gives sharp cut-off.

TABLE IV — 6.3-VOLT GLASS RECEIVING TUBES

Type	Name	Base[4]	Socket Connections[1]	Cathode	Fil. or Heater Volts	Fil. or Heater Amps.	Use	Plate Supply Volts	Grid Bias	Screen Volts	Screen Current Ma.	Plate Current Ma.	Plate Resistance, Ohms	Transconductance Micromhos	Amp. Factor	Load Resistance Ohms	Power Output Watts	Type
6A3	Triode Power Amplifier	4-pin M.	4D	Fil.	6.3	1.0	Class-A Amplifier	250	— 45	——	——	60	800	5250	4.2	2500	3.5	6A3
							Push-Pull Amplifier	300 300	— 62 ——	Fixed Bias Self Bias[8]		40 40	Power output for 2 tubes load plate-to-plate			3000 5000	15 10	
6A4[3]	Pentode Power Amplifier	5-pin M.	5B	Fil.	6.3	0.3	Class-A Amplifier	180	—12.0	180	3.9	22	45500	2200	100	8000	1.4	6A4
6A6	Twin Triode Amplifier	7-pin M.	7B	Htr.	6.3	0.8	Class-B Amplifier	250 300	0 0	——	——	Power output is for one tube at stated load, plate-to-plate				8000 10000	8.0 10.0	6A6
6A7	Pentagrid Converter	7-pin S.	7C	Htr.	6.3	0.3	Converter	250	— 3.0	100	2.2	3.5	360000	Anode grid (No. 2) 200 volts max.				6A7
6AB5	Electron-Ray Tube	6-pin S.	6R	Htr.	6.3	0.15	Indicator Tube	135	0	——	——	0.5	Target current 4.5 ma.					6AB5
6AF6G	Electron-Ray Tube	7-pin S.	7AG	Htr.	6.3	0.15	Indicator Tube	250	155[10]	0[11]	——	——	Target current 3.75 ma.					6AF6G
	Twin Indicator Type							135	81[10]	0[11]	——	——	Target current 1.5 ma.					
6B5	Direct-Coupled Power Amplifier	6-pin M.	6AS	Htr.	6.3	0.8	Class-A Amplifier	300	0	——	6[5]	45	241000	2400	58	7000	4.0	6B5
							Push-Pull Amplifier	400	—13.0	——	4.5[5]	40	——	——	——	10000	20	
6B7	Duplex-Diode Pentode	7-pin S.	7D	Htr.	6.3	0.3	Pentode R.F. Amplifier	250	— 3.0	125	2.3	9.0	650000	1125	730	——	——	6B7
6C6	Triple-Grid Amplifier	6-pin S.	6F	Htr.	6.3	0.3	R.F. Amplifier	250	— 3.0	100	0.5	2.0	1500000	1225	1500	——	——	6C6
6C7	Duplex Diode Triode	7-pin S.	7G	Htr.	6.3	0.3	Class-A Amplifier	250	— 9.0	——	——	4.5	——	20	1250	——	——	6C7
6D6	Triple-Grid Variable-μ	6-pin S.	6F	Htr.	6.3	0.3	R.F. Amplifier	250	— 3.0	100	2.0	8.2	800000	1600	1280	——	——	6D6
6D7	Triple-Grid Amplifier	7-pin S.	7H	Htr.	6.3	0.3	Class-A Amplifier	250	— 3.0	100	0.5	2.0	——	1600	1280	——	——	6D7
6E5	Electron-Ray Tube	6-pin S.	6R	Htr.	6.3	0.3	Indicator Tube	250	0	——	——	0.25	Target Current 4 ma.				——	6E5
6E6	Twin Triode Amplifier	7-pin M.	7B	Htr.	6.3	0.6	Class-A Amplifier	250	—27.5	Per plate — 18.0			3500	1700	6.0	14000	1.6	6E6
6E7	Triple-Grid Variable-μ	7-pin S.	7H	Htr.	6.3	0.3	R.F. Amplifier	Characteristics same as 6U7G — Table II										6E7
6F7	Triode Pentode	7-pin S.	7E	Htr.	6.3	0.3	Triode Unit Amplifier	100	— 3.0	——	——	3.5	16000	500	8	——	——	6F7
							Pentode Unit Amplifier	250	— 3.0	100	1.5	6.5	850000	1100	900	——	——	
6G5/6U5	Electron-Ray Tube	6-pin S.	6R	Htr.	6.3	0.3	Indicator Tube	250 100	Cut-off Grid Bias = 22 v. " " " = 8 v.			0.24 0.19	Target Current 4 ma. " " 1 "				——	6G5/6U5
6H5	Electron-Ray Tube	6-pin S.	6R	Htr.	6.3	0.3	Indicator Tube	Same characteristics as Type 6G5 — Circular Pattern										6H5
6J6	Twin Triode	7-pin M.	7BF	Htr.	6.3	0.45	Class-Amplifier	150	50[12]	——	——	8.5	6000	5300	32	——	——	6J6
6N5	Electron-Ray Tube	6-pin S.	6R	Htr.	6.3	0.15	Indicator Tube	180	Cut-off Grid Bias = —12 v.			0.5	Target Current 2 ma.				——	6N5
6T5	Electron-Ray Tube	6-pin S.	6R	Htr.	6.3	0.3	Indicator Tube	250	Cut-off Grid Bias = —12 v.			0.24	Target Current 4 ma.				——	6T5

TABLE IV—6.3-VOLT GLASS RECEIVING TUBES—*Continued*

Type	Name	Base [4]	Socket Connections [1]	Cathode	Fil. or Heater Volts	Fil. or Heater Amps.	Use	Plate Supply Volts	Grid Bias	Screen Volts	Screen Current Ma.	Plate Current Ma.	Plate Resistance, Ohms	Transconductance Micromhos	Amp. Factor	Load Resistance Ohms	Power Output Watts	Type
36	Tetrode R.F. Amplifier	5-pin S.	5E	Htr.	6.3	0.3	R.F. Amplifier	250	− 3.0	90	1.7	3.2	550000	1080	595	—	—	36
37	Triode Detector Amplifier	5-pin S.	5A	Htr.	6.3	0.3	Class-A Amplifier	250	−18.0	—	—	7.5	8400	1100	9.2	—	—	37
38	Pentode Power Amplifier	5-pin S.	5F	Htr.	6.3	0.3	Class-A Amplifier	250	−25.0	250	3.8	22.0	100000	1200	120	10000	2.5	38
39/44	Variable-μ R.F. Amplifier	5-pin S.	5F	Htr.	6.3	0.3	R.F. Amplifier	250	− 3.0	90	1.4	5.8	1000000	1050	1050	—	—	39/44
41	Pentode Power Amplifier	6-pin S.	6B	Htr.	6.3	0.4	Class-A Amplifier	250	−18.0	250	5.5	32.0	68000	2200	150	7600	3.4	41
42	Pentode Power Amplifier	6-pin M.	6B	Htr.	6.3	0.7	Class-A Amplifier	250	−16.5	250	6.5	34.0	100000	2200	220	7000	3.0	42
75	Duplex-Diode Triode	6-pin S.	6G	Htr.	6.3	0.3	Triode Amplifier	250	− 1.35	—	—	0.4	91000	1100	100	—	—	75
76	Triode Detector Amplifier	5-pin S.	5A	Htr.	6.3	0.3	Class-A Amplifier	250	−13.5	—	—	5.0	9500	1450	13.8	—	—	76
77	Triple-Grid Detector	6-pin S.	6F	Htr.	6.3	0.3	R.F. Amplifier	250	− 3.0	100	0.5	2.3	1500000	1200	1500	—	—	77
78	Triple-Grid Variable-μ	6-pin S.	6F	Htr.	6.3	0.3	R.F. Amplifier	250	− 3.0	100	1.7	7.0	800000	1450	1160	—	—	78
79	Twin Triode Amplifier	6-pin S.	6H	Htr.	6.3	0.6	Class-B Amplifier	250	0	—	—	Power output is for one tube				14000	8.0	79
85	Duplex-Diode Triode	6-pin S.	6G	Htr.	6.3	0.3	Class-A Amplifier	250	−20.0	—	—	8.0	7500	1100	8.3	20000	0.35	85
85AS	Duplex-Diode Triode	6-pin S.	6G	Htr.	6.3	0.3	Class-A Amplifier	250	− 9.0	—	—	5.5	—	1250	20	—	—	85 AS
89	Triple-Grid Power Amplifier	6-pin S.	6F	Htr.	6.3	0.4	Triode Amplifier [6]	250	−31.0	—	—	32.0	2600	1800	4.7	5500	0.9	89
							Pentode Amplifier [7]	250	−25.0	250	5.5	32.0	70000	1800	125	6750	3.4	
7E5/1221 [9]	Triple-Grid Amplifier	6-pin S.	6F	Htr.	6.3	0.3	Class-A Amplifier	Characteristics same as 6C6										7E5/1221
1603 [9]	Triple-Grid Amplifier	6-pin M.	6F	Htr.	6.3	0.3	Class-A Amplifier	Characteristics same as 6C6										1603
7700 [9]	Triple-Grid Amplifier	6-pin S.	6F	Htr.	6.3	0.3	Class-A Amplifier	Characteristics same as 6C6										7700
RK100	Mercury-vapor Triode	6-pin M.	6A	Htr.	6.3	0.6	Amplifier	100	−2.5	Cathode (G1) current 250 ma.				20000	50	—	—	RK100

[1] Refer to Receiving Tube Diagrams.
[2] Suppressor grid, connected to cathode inside tube, not shown on base diagram.
[3] Also known as Type LA.
[4] S. — small; M. — medium.
[5] Current to input plate (P_1).
[6] Grids Nos. 2 and 3 connected to plate.
[7] Grid No. 2, screen; grid No. 3, suppressor.
[8] Cathode resistor, 780 ohms.
[9] Low noise, non-microphonic, tubes.
[10] Ray control voltage for shadow angle of 0°.
[11] Ray control voltage for shadow angle of 100.
[12] Cathode bias resistor-ohms. Fixed bias not recommended.

TABLE V—2.5-VOLT RECEIVING TUBES

Type	Name	Base [3]	Socket Connections [1]	Cathode	Fil. or Heater Volts	Fil. or Heater Amps.	Use	Plate Supply Volts	Grid Bias	Screen Volts	Screen Current Ma.	Plate Current Ma.	Plate Resistance, Ohms	Transconductance Micromhos	Amp. Factor	Load Resistance Ohms	Power Output Watts	Type
2A3	Triode Power Amplifier	4-pin M.	4D	Fil.	2.5	2.5	Class-A Amplifier	Characteristics same as Type 6A3, Table IV										2A3
2A5	Pentode Power Amplifier	6-pin M.	6B	Htr.	2.5	1.75	Class-A Amplifier	Characteristics same as Type 42, Table IV										2A5
2A6	Duplex-Diode Triode	6-pin S.	6G	Htr.	2.5	0.8	Class-A Amplifier	Characteristics same as Type 75, Table IV										2A6
2A7	Pentagrid Converter	7-pin S.	7C	Htr.	2.5	0.8	Osc.-Mixer	Characteristics same as Type 6A7, Table IV										2A7
2B6	Direct-Coupled Amplifier	7-pin M.	7J	Htr.	2.5	2.25	Amplifier	250	−24.0	—	—	40.0	5150	3500	18.0	5000	4.0	2B6
2B7	Duplex-Diode Pentode	7-pin S.	7D	Htr.	2.5	0.8	Pentode Amplifier	Characteristics same as Type 6B7—Table IV										2B7
2E5	Electron-Ray Tube	6-pin S.	6R	Htr.	2.5	0.8	Indicator Tube	Characteristics same as Type 6E5 — Table IV										2E5
2G5	Electron-Ray Tube	6-pin S.	6R	Htr.	2.5	0.8	Indicator Tube	Characteristics same as 6U5-6G5 — Table IV										2G5
24-A	Tetrode R.F. Amplifier	5-pin M.	5E	Htr.	2.5	1.75	Screen-Grid R.F. Amp.	250	− 3.0	90	1.7	4.0	600000	1050	630	—	—	24-A
							Bias Detector	250	− 5.0	20	Plate current adjusted to 0.1 ma. with no signal							
27	Triode Detector-Amplifier	5-pin M.	5A	Htr.	2.5	1.75	Class-A Amplifier	250	−21.0	—	—	5.2	9250	975	9.0	—	—	27
							Bias Detector	250	−30.0	—	Plate current adjusted to 0.2 ma. with no signal							
35	Variable-μ Amplifier	5-pin M.	5E	Htr.	2.5	1.75	Screen-Grid R.F. Amp.	250	− 3.0	90	2.5	6.5	400000	1050	420	—	—	35
45	Triode Power Amplifier	4-pin M.	4D	Fil.	2.5	1.5	Class-A Amplifier	275	−56.0	—	—	36.0	1700	2050	3.5	4600	2.00	45
46	Dual-Grid Power Amplifier	5-pin M.	5C	Fil.	2.5	1.75	Class-A Amplifier [4]	250	−33.0	—	—	22.0	2380	2350	5.6	6400	1.25	46
							Class-B Amplifier [5]	400	0	—	—	Power output for 2 tubes				5800	20.0	

TABLE V — 2.5-VOLT RECEIVING TUBES — *Continued*

Type	Name	Base [3]	Socket Connections [1]	Cathode	Fil. or Heater Volts	Fil. or Heater Amps.	Use	Plate Supply Volts	Grid Bias	Screen Volts	Screen Current Ma.	Plate Current Ma.	Plate Resistance, Ohms	Transconductance Micromhos	Amp. Factor	Load Resistance Ohms	Power Output Watts	Type
47	Pentode Power Amplifier	5-pin M.	5B	Fil.	2.5	1.75	Class-A Amplifier	250	−16.5	250	6.0	31.0	60000	2500	150	7000	2.7	47
53	Twin Triode Amplifier	7-pin M.	7B	Htr.	2.5	2.0	Class-B Amplifier	Characteristics same as Type 6A6, Table IV										53
55	Duplex-Diode Triode	6-pin S.	6G	Htr.	2.5	1.0	Class-A Amplifier	Characteristics same as Type 85, Table IV										55
56	Triode Amplifier, Detector	5-pin S.	5A	Htr.	2.5	1.0	Class-A Amplifier	Characteristics same as Type 76, Table IV										56
57	Triple-Grid Amplifier	6-pin S.	6F	Htr.	2.5	1.0	R.F. Amplifier	250	− 3.0	100	0.5	2.0	1500000	1225	1500	——	——	57
58	Triple-Grid Variable-μ	6-pin S.	6F	Htr.	2.5	1.0	Screen-Grid R.F. Amp.	250	− 3.0	100	2.0	8.2	800000	1600	1280	——	——	58
59	Triple-Grid Power Amplifier	7-pin M.	7A	Htr.	2.5	2.0	Class-A Triode [6]	250	−28.0	——	——	26.0	2300	2600	6.0	5000	1.25	59
							Class-A Pentode [7]	250	−18.0	250	9.0	35.0	40000	2500	100	6000	3.0	
RK15	Triode Power Amplifier	4-pin M.	4D [2]	Fil.	2.5	1.75	Characteristics same as Type 46 with Class-B connections											RK15
RK16	Triode Power Amplifier	5-pin M.	5A	Htr.	2.5	2.0	Characteristics same as Type 59 with Class-A triode connections											RK16
RK17	Pentode Power Amplifier	5-pin M.	5F	Htr.	2.5	2.0	Characteristics same as Type 2A5											RK17

[1] Refer to Receiving Tube Diagrams.
[2] Grid connection to cap; no connection to No. 3 pin.
[3] S. — small; M. — medium.
[4] Grid No. 2 tied to plate.
[5] Grids Nos. 1 and 2 tied together.
[6] Grids Nos. 2 and 3 connected to plate.
[7] Grid No. 2, screen; grid No. 3, suppressor.

TABLE VI — 2.0-VOLT BATTERY RECEIVING TUBES

Type	Name	Base [2]	Socket Connections [1]	Cathode	Fil. or Heater Volts	Fil. or Heater Amps.	Use	Plate Supply Volts	Grid Bias	Screen Volts	Screen Current Ma.	Plate Current Ma.	Plate Resistance, Ohms	Transconductance Micromhos	Amp. Factor	Load Resistance Ohms	Power Output Watts	Type
1A4P	Variable-μ Pentode	4-pin S.	4M	Fil.	2.0	0.06	R.F. Amplifier	180	− 3.0	67.5	0.8	2.3	1000000	750	750	——	——	1A4P
1A4T	Variable-μ Tetrode	4-pin S.	4K	Fil.	2.0	0.06	R.F. Amplifier	180	− 3.0	67.5	0.7	2.3	960000	750	720	——	——	1A4T
1A6	Pentagrid Converter	6-pin S.	6L	Fil.	2.0	0.06	Converter	180	− 3.0	67.5	2.4	1.3	500000	Anode grid (No. 2) 180 max. volts				1A6
1B4P/951	Pentode R.F. Amplifier	4-pin S.	4M	Fil.	2.0	0.06	R.F. Amplifier	180	− 3.0	67.5	0.6	1.7	1500000	650	1000	——	——	1B4P/951
								90	− 3.0	67.5	0.7	1.6	1000000	600	550			
1B5/25S	Duplex-Diode Triode	6-pin S.	6M	Fil.	2.0	0.06	Triode Class-A Amplifier	135	− 3.0	——	——	0.8	35000	575	20	——	——	1B5/25S
1C6	Pentagrid Converter	6-pin S.	6L	Fil.	2.0	0.12	Converter	180	− 3.0	67.5	2.0	1.5	750000	Anode grid (No. 2) 135 max. volts				1C6
1F4	Pentode Power Amplifier	5-pin M.	5K	Fil.	2.0	0.12	Class-A Amplifier	135	− 4.5	135	2.6	8.0	200000	1700	340	16000	0.34	1F4
1F6	Duplex-Diode Pentode	6-pin S.	6W	Fil.	2.0	0.6	R.F. Amplifier	180	− 1.5	67.5	0.6	2.0	1000000	650	650	——	——	1F6
							A.F. Amplifier	135	− 1.0	135	Plate 0.25 megohm Screen 1.0 megohm					Amp. = 48		
15	R.F. Pentode	5-pin S.	5F	Htr.	2.0	0.22	R.F. Amplifier	135	− 1.5	67.5	0.3	1.85	800000	750	600	——	——	15
19	Twin-Triode Amplifier	6-pin S.	6C	Fil.	2.0	0.26	Class-B Amplifier	135	0	——	——	——	Load plate-to-plate			10000	2.1	19
30	Triode Detector Amplifier	4-pin S.	4D	Fil.	2.0	0.06	Class-A Amplifier	180	−13.5	——	——	3.1	10300	900	9.3	——	——	30
31	Triode Power Amplifier	4-pin S.	4D	Fil.	2.0	0.13	Class-A Amplifier	180	−30.0	——	——	12.3	3600	1050	3.8	5700	0.375	31
32	Tetrode R.F. Amplifier	4-pin M.	4K	Fil.	2.0	0.06	R.F. Amplifier	180	− 3.0	67.5	0.4	1.7	1200000	650	780	——	——	32
33	Pentode Power Amplifier	5-pin M.	5K	Fil.	2.0	0.26	Class-A Amplifier	180	−18.0	180	5.0	22.0	55000	1700	90	6000	1.4	33
34	Variable-μ Pentode	4-pin M.	4M	Fil.	2.0	0.06	R.F. Amplifier	180	− 3.0	67.5	1.0	2.8	1000000	620	620	——	——	34
49	Dual-Grid Power Amplifier	5-pin M.	5C	Fil.	2.0	0.12	Class-A Amplifier [3]	135	−20.0	——	——	6.0	4175	1125	4.7	11000	0.17	49
							Class-B Amplifier [4]	180	0	——	——	Power output for 2 tubes				12000	3.5	
840	R.F. Pentode	5-pin S.	5J	Fil.	2.0	0.13	Class-A Amplifier	180	− 3.0	67.5	0.7	1.0	1000000	400	400	——	——	840
950	Pentode Power Amplifier	5-pin M.	5B	Fil.	2.0	0.12	Class-A Amplifier	135	−16.5	135	2.0	7.0	100000	1000	100	13500	0.45	950
RK24	Triode Amplifier	4-pin M.	4D	Fil.	2.0	0.12	Class-A Amplifier	180	−13.5	——	——	8.0	5000	1600	8.0	12000	0.25	RK24

[1] See Receiving Tube Diagrams.
[2] S.— small; M.— medium.
[3] Grid No. 2 tied to plate.
[4] Grids Nos. 1 and 2 tied together.

TABLE VII — 2.0-VOLT BATTERY TUBES WITH OCTAL BASES

Type	Name	Socket Connections	Cathode	Fil. or Heater Volts	Fil. or Heater Amps.	Use	Plate Supply Volts	Grid Bias	Screen Volts	Screen Current Ma.	Plate Current Ma.	Plate Resistance, Ohms	Transconductance Micromhos	Amp. Factor	Load Resistance Ohms	Power Output Watts	Type
1C7G	Pentagrid Converter	7Z	Fil.	2.0	0.06	Converter	—	—	Characteristics same as Type 1C6 — Table VI					—	—	—	1C7G
1D5GP	Variable-μ R.F. Pentode	5Y	Fil.	2.0	0.06	R.F. Amplifier	—	—	Characteristics same as Type 1A4P — Table VI					—	—	—	1D5GP
1D5GT	Variable-μ R.F. Tetrode	5R	Fil.	2.0	0.06	R.F. Amplifier	180	— 3.0	67.5	0.7	2.2	600000	650	—	—	—	1D5GT
1D7G	Pentagrid Converter	7Z	Fil.	2.0	0.06	Converter	—	—	Characteristics same as Type 1A6 — Table VI					—	—	—	1D7G
1E5GP	R.F. Amplifier Pentode	5Y	Fil.	2.0	0.06	R.F. Amplifier	—	—	Characteristics same as Type 1B4 — Table VI					—	—	—	1E5GP
1E7G	Double Pentode Power Amp.	8C	Fil.	2.0	0.24	Class-A Amplifier	135	— 7.5	135	2.0 [2]	6.5 [2]	220000	1600	350	24000	0.65	1E7G
1F5G	Pentode Power Amplifier	6X	Fil.	2.0	0.12	Class-A Amplifier	—	—	Characteristics same as Type 1F4 — Table VI					—	—	—	1F5G
1F7GV	Duplex-Diode Pentode	7AD	Fil.	2.0	0.06	Detector-Amplifier	—	—	Characteristics same as Type 1F6 — Table VI					—	—	—	1F7GV
1G5G	Pentode Power Amplifier	6X	Fil.	2.0	0.12	Class-A Amplifier	135	13.5	135	2.5	8.7	1600000	1550	250	9000	0.55	1G5G
1H4G	Triode Amplifier	5S	Fil.	2.0	0.06	Detector-Amplifier	—	—	Characteristics same as Type 30 — Table VI					—	—	—	1H4G
1H6G	Duplex-Diode Triode	7AA	Fil.	2.0	0.06	Detector-Amplifier	—	—	Characteristics same as Type 1B5 — Table VI					—	—	—	1H6G
1J5G	Pentode Power Amplifier	6X	Fil.	2.0	0.12	Class-A Amplifier	135	—16.5	135	2.0	7.0	—	950	100	13500	0.45	1J5G
1J6G	Twin Triode	7AB	Fil.	2.0	0.24	Class-B Amplifier	—	—	Characteristics same as Type 19 — Table VI					—	—	—	1J6G

[1] Refer to Receiving Tube Diagrams.

[2] Total current for both sections; no signal.

TABLE VIII — 1.5-VOLT FILAMENT DRY-CELL TUBES

See also Table X for Special 1.4-volt Tubes

Type	Name	Base	Socket Connections [1]	Filament Volts	Filament Amps.	Use	Plate Supply Volts	Grid Bias	Screen Volts	Screen Current Ma.	Plate Current Ma.	Plate Resistance, Ohms	Transconductance Micromhos	Amp. Factor	Load Resistance Ohms	Power Output Milliwatts	Type
1A3	H. F. Diode	7-pin B.[10]	5AP	1.4	0.15	Detector	Max. a.c. voltage per plate — 117. Max. output current — 0.5 ma.										1A3L
1A5G	Pentode Power Amplifier	7-pin O.	6X	1.4	0.05	Class-A Amplifier	85 [3]	—4.5 [3]	85	0.7	3.5	300000	800	240	25000	100	1A5G
1A7G	Pentagrid Converter	8-pin O.	7Z	1.4	0.05	Osc.-Mixer	90	0	45 [4]	0.6	0.55	600000	Anode-grid volts 90				1A7G
1B7G	Pentagrid Converter	6-pin O.	7Z	1.4	0.1	Osc.-Mixer	90	0	45	1.3	1.5	350000	Grid No. 1 resistor 200,000 ohms				1B7G
1B8GT	Diode Triode Tetrode	8-pin O.	8AW	1.4	0.1	Triode Amplifier Tetrode Amplifier	90 90	0 —6.0	— 90	— 1.4	0.15 6.3	240000 —	275 1150	— —	— 14000	— 210	1B8GT
1C5G	Pentode Power Amplifier	7-pin O.	6X	1.4	0.1	Class-A Amplifier	83 [3]	—70 [3]	83	1.6	7.0	110000	1500	165	9000	200	1C5G
1D8GT	Diode Triode Pentode	8-pin O.	8AJ	1.4	0.1	Triode Amplifier Pentode Amplifier	90 90	0 —9.0	— 90	— 1.0	1.1 5.0	43500 200000	575 925	25 —	— —	— —	1D8GT
1E4G	Triode Amplifier	8-pin O.	5S [12]	1.4	0.05	Class-A Amplifier	90 90	0 —3.0	—	—	4.5 1.5	11000 17000	1325 825	14.5 14	—	—	1E4G
1G4G	Triode Amplifier	7-pin O.	5S	1.4	0.05	Class-A Amplifier	90	—6.0	—	—	2.3	10700	825	8.8	—	—	1G4G
1G6G	Twin Triode	6-pin O.	7AB	1.4	0.1	Class-A Amplifier Class-B Amplifier	90 90	0 0	— —	— —	1.0 1/7 [5]	45000 34 volts input per grid	675	30	— 12000	— 675	1G6G
1H5G	Diode High-μ Triode	7-pin O.	5Z	1.4	0.05	Class-A Amplifier	90	0	—	—	0.14	240000	275	65	—	—	1H5G
1L4	R. F. Pentode Amplifier	7-pin. B.[10]	6AR	1.4	0.05	Class-A Amplifier	90	0	90	2.0	4.5	350000	1025	—	—	—	1L4
1LA4	Pentode Power Amplifier	8-pin L.	5AD	1.4	0.05	Class-A Amplifier	Characteristics same as 1A5G										1LA4
1LA6	Pentagrid Converter	8-pin L.	7AK	1.4	0.05	Osc.-Mixer	90	0	45	0.6	0.55	Anode Grid Volts 90					1LA6
1LB4	Pentode Power Amplifier	8-pin L.	5AD	1.4	0.05	Class-A Amplifier	90	—9	90	1.0	5.0	200000	925	—	12000	200	1LB4
1LB6GL	Heptode Converter	8-pin L.	8AX	1.4	0.05	Osc.-Mixer	90	0	67.5	2.2	0.4	Grid No. 4 — 67.5 v., No. 5 — 0 v.					1LB6GL
1LC5	Triple-Grid Variable-μ	8-pin L.	7AO	1.4	0.05	R.F. Amplifier	90	0	45	0.2	1.15	1500000	775	—	—	—	1LC5
1LC6	Pentagrid Converter	8-pin L.	7AK	1.4	0.05	Osc.-Mixer	90	0	35 [9]	0.7	0.75	Anode Grid Volts 45					1LC6

TABLE VIII — 1.5-VOLT FILAMENT DRY-CELL TUBES — *Continued*

Type	Name	Base	Socket Connections [1]	Filament Volts	Filament Amps.	Use	Plate Supply Volts	Grid Bias	Screen Volts	Screen Current Ma.	Plate Current Ma.	Plate Resistance, Ohms	Transconductance Micromhos	Amp. Factor	Load Resistance Ohms	Power Output Milliwatts	Type
1LD5	Diode Pentode	7-pin L.	6AX	1.4	0.05	Class-A Amplifier	90	0	45	0.1	0.6	950000	600	—	—	—	1LD5
1LE3	Triode Amplifier	8-pin L.	4AA	1.4	0.05	Class-A Amplifier	90 90	0 −3	—	—	4.5 1.3	11200 19000	1300 760	14.5	—	—	1LE3
1LH4	Diode High-μ Triode	8-pin L.	5AG	1.4	0.05	Class-A Amplifier	90	0	—	—	0.15	240000	275	65	—	—	1LH4
1LN5	Triple-Grid Amplifier	8-pin L.	7AO	1.4	0.05	Class-A Amplifier	90	0	90	0.3	1.2	1500000	750	—	—	—	1LN5
1N5G	Pentode R.F. Amplifier	7-pin O.	5Y	1.4	0.05	Class-A Amplifier	90	0	90	0.3	1.2	1500000	750	1160	—	—	1N5G
1N6G	Diode-Power-Pentode	6-pin O.	7AM	1.4	0.05	Class-A Amplifier	90	−4.5	90	0.6	3.1	300000	800	—	25000	100	1N6G
1P5G	Triple-Grid Pentode	5-pin O.	5Y	1.4	0.05	R.F. Amplifier	90	0	90	0.7	2.3	800000	800	640	—	—	1P5G
1Q5G	Tetrode Power Amplifier	5-pin O.	6AF	1.4	0.1	Class-A Amplifier	85 90	−5.0 −4.5	85 90	1.2 1.6	7.2 9.5	70000 75000	1950 2100	—	9000 8000	260 270	1Q5G
1R5	Pentagrid Converter	7-pin B.[10]	7AT	1.4	0.05	Osc.-Mixer	90	0	67.5	3.0	1.7	500000	Grid No. 1 100000 ohms				1R5
1S4	Pentagrid Power Amplifier	7-pin B.[10]	7AV	1.4	0.1	Class-A Amplifier	90	−7.0	67.5	1.4	7.4	100000	1575	—	8000	270	1S4
1S5	Diode Pentode	7-pin B.[10]	6AU	1.4	0.05	Class-A Amplifier	67.5	0	67.5	0.4	1.6	600000	625	—	—	—	1S5
						Resistor-Coupled Amp.	90	0	90	Screen resistor 3 meg., grid 10 meg.					1 meg.	50 [13]	
1SA6GT	R.F. Pentode	8-pin O.	6CA	1.4	0.05	R.F. Amplifier	90	0	67.5	0.68	2.45	800000	970	—	—	—	1SA6GT
1SB6GT	Diode Pentode	7-pin O.	6CB	1.4	0.05	Class-A Amplifier	90	0	67.5	0.38	1.45	700000	665	—	—	—	1SB6GT
						Resistance-Coupled Amp.	90	0	90	Screen resistor 5 meg., grid 10 meg.					1 meg.	110 [13]	
1T4	Triple-Grid Variable-μ	7-pin B. [10]	6AR	1.4	0.05	Class-A Amplifier	90	0	45	0.65	2.0	800000	750	—	—	—	1T4
1T5GT	Beam Power Amplifier	7-pin O.	6AF	1.4	0.05	Class-A Amplifier	90	−6.0	90	1.4	6.5	—	1150	—	14000	170	1T5GT
3B7/1291	U.h.f. Twin Triode	8-pin L.	Fig. 6 [14]	1.4	0.22	Class-A Amplifier	90	0	—	—	5.2	11350	1850	21	—	—	1291
1293	U.h.f. Triode	8-pin L.	Fig. 2 [14]	1.4	0.11	Class-A Amplifier	90	0	—	—	4.7	10750	1300	14	—	—	1293
1R4/1294	U.h.f. Diode	8-pin L.	Fig. 1 [14]	1.4	0.15	Rectifier	Max. r.m.s. voltage per plate — 30					Max. d.c. output current — 340 μa.					1294
3D6/1299	U.h.f. Tetrode	8-pin L.	6BB	1.4	0.22	Class-A Amplifier	135	−6	90	0.7	5.7	—	2200	—	13000	0.5	1299
CK501	Pentode Voltage Amplifier	5-pin P.[6]	6X	1.25	0.033	Class-A Amplifier	30 45	0 −1.25	30 45	0.06 0.055	0.3 0.28	1000000 1500000	325 300	—	—	—	CK501
CK502	Pentode Output Amplifier	5-pin P.[6]	6X	1.25	0.033	Class-A Amplifier	30	0	30	0.13	0.55	500000	400	—	60000	3	CK502
CK503	Pentode Output Amplifier	5-pin P.[6]	6X	1.25	0.033	Class-A Amplifier	30	0	30	0.33	1.5	150000	600	—	20000	6 [7]	CK503
CK504	Pentode Output Amplifier	5-pin P.[6]	6X	1.25	0.033	Class-A Amplifier	30	−1.25	30	0.09	0.4	500000	350	—	60000	3 [7]	CK504
CK505	Pentode Voltage Amplifier	5-pin P.[6]	6X	0.625[11]	0.03	Class-A Amplifier	30 45	0 −1.25	30 45	0.07 0.08	0.17 0.2	1100000 2000000	140 150	—	—	—	CK505
HY113	Triode Amplifier	5-pin P.[6]	5K [8]	1.4	0.07	Class-A Amplifier	45	−4.5	—	—	0.4	25000	250	6.3	40000	6.5	HY113
HY115	Pentode Voltage Amplifier	5-pin P.[6]	5K	1.4	0.07	Class-A Amplifier	45 90	−1.5 −1.5	22.5 45	0.008 0.1	0.03 0.48	5200000 1300000	58 270	300 370	—	—	HY115
HY125	Pentode Power Amplifier	5-pin P.[6]	5K	1.4	0.07	Class-A Amplifier	45 90	−3.0 −7.5	45 90	0.2 0.5	0.9 2.6	825000 420000	310 450	255 190	50000 28000	11.5 90	HY125
RK42	Triode Amplifier	4-pin S.	4D	1.5	0.6	Class-A Amplifier	Characteristics same as Type 30—Table VI										RK42
RK43	Twin Triode Amplifier	6-pin S.	6C	1.5	0.12	Twin Triode Amplifier	135	−3	—	—	4.5	14500	900	13	—	—	RK43

[1] Refer to Receiving Tube Diagrams.
[2] M. — medium; S. — small; O. — octal; L. — loktal.
[3] Grid bias obtained from 90-volt "B" supply through self-biasing resistor.
[4] Obtained from 90-volt supply through 70,000-ohm dropping resistor.
[5] Per tube. Values to left of diagonal line for no-signal condition; values to right are with signal.
[6] Special miniature 5-pin peanut base. Also available with small-shell octal base.
[7] With 5-megohm grid resistor and 0.02-μfd. grid coupling condenser.
[8] No screen connection.
[9] Through series resistor. Screen voltage must be at least 10 volts lower than oscillator anode.
[10] Special 7-pin "button" base, miniature type.
[11] Two tubes connected in series for 1.4-volt operation.
[12] Internal shield connected to pin 1.
[13] Voltage gain.
[14] See Supplementary Base Diagrams.

TABLE IX — HIGH-VOLTAGE HEATER TUBES

Type	Name	Base [3]	Socket Connections [1]	Heater		Use	Plate Supply Volts	Grid Bias	Screen Volts	Screen Current Ma.	Plate Current Ma.	Plate Resistance, Ohms	Transconductance Micromhos	Amp. Factor	Load Resistance Ohms	Power Output Watts	Type
				Volts	Amps.												
12A5	Pentode Power Amplifier	7-pin M.	7F	12.6 6.3	0.3 0.6	Class-A Amplifier	100 180	−15 −25	100 180	3/6.5 8/14	17/19 45/48	50000 35000	1700 2400	——	4500 3300	0.8 3.4	12A5
12A6	Beam Power Amplifier	7-pin O.	7AC	12.6	0.5	Class-A[1] Amplifier	250	−12.5	250	3.5	30	70000	3000	——	7500	3.4	12A6
12A7	Rectifier-Amplifier [5]	7-pin M.	7K	12.6	0.3	Class-A Amplifier	135	−13.5	135	2.5	9.0	102000	975	100	13500	0.55	12A7
12A8GT	Pentagrid Converter	8-pin O.	8A	12.6	0.15	Osc.-Mixer	Characteristics same as 6A8—Table I										12A8GT
12AH7GT	Twin Triode	8-pin O.	8BE	12.6	0.15	Converter and Amplifier	Characteristics same as 6AH7GT — Table II										12AH7GT
12B6M [3]	Diode Triode	6-pin O.	6Y	12.6	0.15	Class-A Amplifier	250	− 2.0	——	——	0.9	91000	1100	100	——	——	12B6M
12B7ML	Pentode Amplifier	8-pin O.	8V	12.6	0.15	Class-A Amplifier	250	− 3.0	100	2.6	9.2	800000	2000	——	——	——	12B7ML
12B8GT	Triode-Pentode	8-pin O.	8T	12.6	0.3	Class-A Triode	100	− 1	——	——	0.6	73000	1500	110	——	——	12B8GT
						Class-A Pentode	100	− 3	100	2	8	170000	2100	360	——	——	
12C8	Duplex-Diode Pentode	8-pin O.	8E	12.6	0.15	Class-A Amplifier	Characteristics same as 6B8—Table I										12C8
12E5GT	Triode Amplifier	6-pin O.	6Q	12.6	0.15	Class-A Amplifier	250	−13.5	——	——	50	——	1450	13.8	——	——	12E5GT
12F5GT	Triode Amplifier	5-pin O.	5M	12.6	0.15	Class-A Amplifier	Characteristics same as 6F5—Table I										12F5GT
12G7G	Duplex-Diode Triode	7-pin O.	7V	12.6	0.15	Class-A Amplifier	250	− 3.0	——	——	——	58000	1200	70	——	——	12G7G
12H6	Twin Diode	7-pin O.	6Q	12.6	0.15	Rectifier	Characteristics same as 6H6—Table I										12H6
12J5GT	Triode Amplifier	6-pin O.	6Q	12.6	0.15	Class-A Amplifier	Characteristics same as 6J5—Table I										12J5GT
12J7GT	Pentode Voltage Amplifier	7-pin O.	7R	12.6	0.15	Class-A Amplifier	Characteristics same as 6J7—Table I										12J7GT
12K7GT	Remote Cut-off Pentode	7-pin O.	7R	12.6	0.15	R.F. Amplifier	Characteristics same as 6K7—Table I										12K7GT
12K8	Triode Hexode Converter	8-pin O.	8K	12.6	0.15	Osc.-Mixer	Characteristics same as 6K8—Table I										12K8
12Q7GT	Duplex-Diode Triode	7-pin O.	7V	12.6	0.15	Class-C Amplifier	Characteristics same as 6Q7—Table I										12Q7GT
12SA7	Pentagrid Converter	8-pin O.	8R	12.6	0.15	Osc.-Mixer	Characteristics same as 6SA7—Table I										12SA7
12SC7	Twin Triode	8-pin O.	8S	12.6	0.15	Class-A Amplifier	Characteristics same as 6SC7 — Table I										12SC7
12SF5	High-μ Triode	6-pin O.	8P	12.6	0.15	Class-A Amplifier	Characteristics same as 6SF5 — Table I										12SF5
12SF7	Diode Variable-μ Pentode	8-pin O.	7AZ	12.6	0.15	Class-A Amplifier	Characteristics same as 6SF7 — Table I										12SF7
12SG7	Triple-Grid Variable-μ	8-pin O.	8BC	12.6	0.15	Class-A Amplifier	Characteristics same as 6SG7 — Table I										12SG7
12SH7	H-F Amplifier Pentode	8-pin O.	8BK	12.6	0.15	H-F Amplifier	Characteristics same as 6SH7 — Table I										12SH7
12SJ7	Pentode Voltage Amplifier	8-pin O.	8N	12.6	0.15	Class-A Amplifier	Characteristics same as 6SJ7—Table I										12SJ7
12SK7	Remote Cut-off Pentode	8-pin O.	8N	12.6	0.15	R.F. Amplifier	Characteristics same as 6SK7—Table I										12SK7
12SL7GT	Twin Triode	8-pin O.	8BD	12.6	0.15	Class-A Amplifier	Characteristics same as 6SL7GT—Table II										12SL7GT
12SN7GT	Twin Triode	8-pin O.	8BD	12.6	0.3	Class-A Amplifier	Characteristics same as 6SN7GT—Table II										12SN7GT
12SQ7	Duplex-Diode Triode	8-pin O.	8Q	12.6	0.15	Class-A Amplifier	Characteristics same as 6SQ7—Table I										12SQ7
12SR7	Duplex-Diode Triode	8-pin O.	8Q	12.6	0.15	Class-A Amplifier	Characteristics same as 6R7—Table I										12SR7
14A4	Triode Amplifier	8-pin L.	5AC	14[4]	0.16	Class-A Amplifier	Characteristics same as 7A4—Table III										14A4
14A5	Beam Power Amplifier	8-pin L.	6AA	14[4]	0.16	Class-A Amplifier	250	−12.5	250	3.5/5.5	30/32	70000	3000	——	7500	2.8	14A5
14A7/ 12B7	Triple-Grid Variable-μ	8-pin L.	8V	14[4]	0.16	Class-A Amplifier	250	− 3.0	100	2.6	9.2	800000	2000	——	——	——	14A7/ 12B7
14AF7	Twin Triode	8-pin L.	8AC	14	0.16	Class-A Amplifier	250	−10	——	——	9	7600	2100	16	——	——	14AF7
14B6	Duplex-Diode Triode	8-pin L.	8W	14[4]	0.16	Class-A Amplifier	Characteristics same as 7B6—Table III										14B6
14B8	Pentagrid Converter	8-pin L.	8X	14[4]	0.16	Osc.-Mixer	Characteristics same as 7B8—Table III										14B8
14C5	Beam Power Amplifier	8-pin L.	6AA	14[4]	0.24	Class-A Amplifier	Characteristics same as 6V6—Table I										14C5
14C7	Triple-Grid Amplifier	8-pin L.	8V	14[4]	0.16	Class-A Amplifier	250	− 3.0	100	0.7	2.2	1000000	1575	——	——	——	14C7
14E6	Duplex-Diode Triode	8-pin L.	8W	14[4]	0.16	Class-A Amplifier	Characteristics same as 7E6—Table III										14E6
14E7	Duplex-Diode Pentode	8-pin L.	8AE	14[4]	0.16	Class-A Amplifier	Characteristics same as 7E7—Table III										14E7

TABLE IX — HIGH-VOLTAGE HEATER TUBES — *Continued*

Type	Name	Base [3]	Socket Connections [1]	Heater Volts	Heater Amps.	Use	Plate Supply Volts	Grid Bias	Screen Volts	Screen Current Ma.	Plate Current Ma.	Plate Resistance, Ohms	Transconductance Micromhos	Amp. Factor	Load Resistance Ohms	Power Output Watts	Type
14F7	Twin Triode	8-pin L.	8AC	14[4]	0.16	Class-A Amplifier	Characteristics same as 7F7—Table III										14F7
14H7	Triple-Grid Semi-Variable-μ	8-pin L.	8V	14[4]	0.16	Class-A Amplifier	250	− 2.5	150	3.5	9.5	800000	3800	——	——	——	14H7
14J7	Triode-Hexode Converter	8-pin L.	8AR	14[4]	0.16	Osc.-Mixer	Characteristics same as 7J7—Table III										14J7
14N7	Twin Triode	8-pin L.	8AC	14[4]	0.16	Class-A Amplifier	Characteristics same as 7N7—Table III										14N7
14Q7	Heptode Pentagrid Converter	8-pin L.	8AL	14[4]	0.16	Osc.-Mixer	Characteristics same as 7Q7—Table III										14Q7
14R7	Duplex-Diode Pentode	8-pin L.	8AE	14[4]	0.16	Class-A Amplifier	Characteristics same as 7R7—Table III										14R7
14S7	Triode Heptode	8-pin L.	8BL	14[4]	0.16	Osc.-Mixer	250	− 2.0	100	3	1.8	1250000	525	——	——	——	14S7
14W7	Pentode	8-pin L.	8BJ	14[4]	0.24	Class-A Amplifier	300	− 2.2	150	3.9	10	300000	5800	——	——	——	14W7
20J8GM[3]	Triode Heptode Converter	8-pin O.	8H	20	0.15	Osc.-Mixer	250	− 3.0	100	3.4	1.5	Triode Plate (No. 6) 100 v. 1.5 ma.					20J8GM
21A7	Triode Hexode Converter	8-pin L.	8AR	21	0.16	Osc.-Mixer	250 150	− 3.0 − 3.0	100 Triode	2.8	1.3 3.5	—— ——	275 1900	—— 32	—— ——	—— ——	21A7
25A6	Pentode Power Amplifier	7-pin O.	7S	25	0.3	Class-A Amplifier	135	−20.0	135	8	37	35000	2450	85	4000	2.0	25A6
25A7G	Rectifier-Amplifier[5]	8-pin O.	8F	25	0.3	Class-A Amplifier	100	−15.0	100	4	20.5	50000	1800	90	4500	0.77	25A7G
25AC5G	Triode Power Amplifier	6-pin O.	6Q	25	0.3	Class-A Amplifier	110	+15.0	——	——	45	——	3800	58	2000	2.0	25AC5G
							165	Used in dynamic-coupled circuit with 6AF5G driver							3500	3.3	
25B5	Direct-Coupled Triodes	6-pin S.	6D	25	0.3	Class-A Amplifier	110	0	110	7	45	11400	2200	25	2000	2.0	25B5
25B6G	Pentode Power Amplifier	7-pin O.	7S	25	0.3	Class-A Amplifier	95	−15.0	95	4	45	——	4000	——	2000	1.75	25B6G
25B8GT	Triode Pentode	8-pin O.	8T	25	0.15	Class-A Amplifier	Characteristics same as 12B8GT										25B8GT
25C6G	Beam Power Amplifier	7-pin O.	7AC	25	0.3	Class-A Amplifier	135	−13.5	135	3.5/11.5	58/60	9300	7000	——	2000	3.6	25C6G
25D8GT	Diode Triode Pentode	8-pin O.	8AF	25	0.15	Triode Amplifier	100	− 1.0	——	——	0.5	91000	1100	100	——	——	25D8GT
						Pentode Amplifier	100	− 3.0	100	2.7	8.5	200000	1900	——	——	——	
25L6	Beam Power Amplifier	7-pin O.	7AC	25	0.3	Class-A Amplifier	110	− 8.0	110	3.5/10.5	45/48	10000	8000	80	2000	2.2	25L6
25N6G	Direct-Coupled Triodes	7-pin O.	7W	25	0.3	Class-A Amplifier	110	0	110	7	45	11400	2200	25	2000	2.0	25N6G
32L7GT	Diode-Beam Tetrode[5]	8-pin O.	8F	32.5	0.3	Class-A Amplifier	110	− 7.5	110	3	40	15000	6000	——	2500	1.5	32L7GT
35A5	Beam Power Amplifier	8-pin L.	6AA	35	0.15	Class-A Amplifier	110	− 7.5	110	3/7	40/41	14000	5800	——	2500	1.5	35A5
35L6G	Beam Power Amplifier	7-pin O.	7AC	35	0.15	Class-A Amplifier	110	− 7.5	110	3/7	40/41	13800	5800	——	2500	1.5	35L6G
43	Pentode Power Amplifier	6-pin M.	6B	25	0.3	Class-A Amplifier	95	−15.0	95	4.0	20.0	45000	2000	90	4500	0.90	43
48	Tetrode Power Amplifier	6-pin M.	6A	30	0.4	Class-A Amplifier	96	−19.0	96	9.0	52.0	——	3800	——	1500	2.0	48
50A5	Beam Power Amplifier	8-pin L.	6AA	50	0.15	Class-A Amplifier	110	− 7.5	110	4/11	49/50	10000	8200	——	2000	2.2	50A5
50C6G	Beam Power Amplifier	7-pin O.	7AC	50	0.15	Class-A Amplifier	135	−13.5	135	3.5/11.5	58/60	9300	7000	——	2000	3.6	50C6GT
50L6GT	Beam Power Amplifier	7-pin O.	7AC	50	0.15	Class-A Amplifier	110	− 7.5	110	4/11	49/50	——	8200	82	2000	2.2	50L6GT
70A7GT	Diode-Beam Tetrode[5]	8-pin O.	8AB[7]	70	0.15	Class-A Amplifier	110	− 7.5	110	3.0	40	——	5800	80	2500	1.5	70A7GT
70L7GT	Diode-Beam Tetrode[5]	8-pin O.	8AA	70	0.15	Class-A Amplifier	110	− 7.5	110	3/6	40/43	15000	7500	——	2000	1.8	70L7GT
117L7GT/ 117M7GT	Rectifier-Amplifier[5]	8-pin O.	8AO	117	0.09	Class-A Amplifier	105	− 5.2	105	4/5.5	43	17000	5300	——	4000	0.85	117L7GT/ 117M7GT
117N7GT	Rectifier-Amplifier[5]	8-pin O.	8AV	117	0.09	Class-A Amplifier	100	− 6.0	100	5.0	51	16000	7000	——	3000	1.2	117N7GT
117P7GT	Rectifier-Amplifier [5]	8-pin O.	8AV	117	0.09	Class-A Amplifier	105	− 5.2	105	4/5.5	43	17000	5300	——	4000	0.85	117P7GT
1284	U.h.f. Pentode	8-pin O.	Fig. 4[6]	12.6	0.15	Class-A Amplifier	250	− 3.0	100	2.5	9.0	800000	2000	——	——	——	1284
1629	Electron-Ray Tube	7-pin O.	6RA	12.6	0.15	Indicator Tube	Characteristics same as 6E5—Table IV										1629
1631	Beam Power Amplifier	7-pin O.	7AC	12.6	0.45	Class-A Amplifier	Characteristics same as 6L6—Table I										1631
1632	Beam Power Amplifier	7-pin O.	7AC	12.6	0.6	Class-A Amplifier	Characteristics same as 25L6										1632
1633	Twin Triode	8-pin O.	8BD	25	0.15	Class-A Amplifier	Characteristics same as 6SN7GT—Table II										1633
1634	Twin Triode	8-pin O.	8S	12.6	0.15	Class-A Amplifier	Characteristics same as 6SC7—Table I										1634
1644	Twin Pentode	8-pin O.	Fig. 7[6]	12.6	0.15	Class-A Amplifier	180	− 9.0	180	2.8/4.6	13	160000	2150	——	10000	1.0	1644

TABLE IX — HIGH-VOLTAGE HEATER TUBES — *Continued*

Type	Name	Base[3]	Socket Connections[1]	Heater Volts	Heater Amps.	Use	Plate Supply Volts	Grid Bias	Screen Volts	Screen Current Ma.	Plate Current Ma.	Plate Resistance, Ohms	Transconductance Micromhos	Amp. Factor	Load Resistance Ohms	Power Output Watts	Type
XXD	Twin Triode	8-pin L.	8AC	12.6	0.15	Class-A Amplifier	250	— 10	—	—	9.0	—	2100	16	—	—	XXD
28D7	Double Beam Power Amplifier	8-pin L.	Fig. 12[6]	28.0	0.4	Class-A_2 Amplifier	28	390[10]	28[8]	0.7[8]	9.0[8]	—	—	—	4000[8]	0.08[8]	28D7
								180[10]	28[9]	1.2[9]	18.5[9]	—	—	—	6000[11]	0.175[9]	

[1] Refer to Receiving Tube Diagrams.
[2] M. — medium; S. — small; O. — octal; L. — loktal.
[3] Metal-sprayed glass envelope.
[4] Maximum rating, corresponding to 130-volt line condition; normal rating is 12.6 v. for 117-v. line.
[5] For rectifier data, see Table XIII. [6] See Supplementary Base Diagrams.
[7] 6.3-volt pilot lamp must be connected between pins 6 and 7.
[8] Per section (except heater) — resistance coupled.
[9] P. P. operation — values for both sections, resistance coupled.
[10] Cathode resistor — ohms. [11] Plate to plate.

TABLE X — SPECIAL RECEIVING TUBES

Type	Name	Base[2]	Socket Connections[1]	Cathode	Fil. or Heater Volts	Fil. or Heater Amps.	Use	Plate Supply Volts	Grid Bias	Screen Volts	Screen Current Ma.	Plate Current Ma.	Plate Resistance, Ohms	Transconductance Micromhos	Amp. Factor	Load Resistance Ohms	Power Output Watts	Type
00-A	Triode Detector	4-pin M.	4D	Fil.	5.0	0.25	Grid Leak Detector	45	—	—	—	1.5	30000	666	< 20	—	—	00-A
01-A	Triode Detector-Amplifier	4-pin M.	4D	Fil.	5.0	0.25	Class-A Amplifier	135	— 9.0	—	—	3.0	10000	800	8.0	—	—	01-A
3A4	Power Amplifier Pentode	7-pin B.	7BB	Fil.	1.4 2.8	0.2 0.1	Class-A Amplifier	135 150	— 7.5 — 8.4	90 90	2.6 2.2	14.8 13.3	90000 100000	1900	—	8000	0.6 0.7	3A4
3A5	H.F. Twin Triode	7-pin B.	7BC	Fil.	1.4 2.8	0.22 0.11	Class-A Amplifier	90	— 2.5	—	—	3.7	8300	1800	15	—	—	3A5
3A8GT	Diode Triode Pentode	8-pin O.	8AS	Fil.[6]	1.4	0.1	Class-A Triode	90	0	—	—	0.15	240000	275	65	—	—	3A8GT
					2.8	0.05	Class-A Pentode	90	0	90	0.3	1.2	600000	750	—	—	—	
3B5GT	Beam Power Amplifiers	7-pin O.	7AP	Fil.[6]	1.4 2.8	0.1 0.05	Class-A Amplifier	67.5	— 7.0	67.5	0.6 0.5	8.0 6.7	100000	1650 1500	—	5000	0.2 0.18	3B5GT
3C5GT	Power Output Pentode	7-pin O.	7AQ	Fil.[6]	1.4 2.8	0.1 0.05	Class-A Amplifier	90	— 9.0	90	1.4	6.0	—	1550 1450	—	8000 10000	0.24 0.26	3C5GT
3LE4	Power Amplifier Pentode	8-pin L.	6BA	Fil.	2.8	0.05	Class-A Amplifier	90	— 9.0	90	1.8	9.0	110000	1600	—	6000	0.30	3LE4
3LF4	Power Amplifier Tetrode	8-pin L.	6BB	Fil.	1.4 2.8	0.1 0.05	Class-A Amplifier	90	— 4.5	90	1.3 1.0	9.5 8.0	75000 80000	2200 2000	—	8000 7000	0.27 0.23	3LF4
3Q4	Power Amplifier Pentode	7-pin O.[8]	7BA	Fil.[6]	1.4 2.8	0.1 0.05	Class-A Amplifier	90	— 4.5	90	2.1 1.7	9.5 7.7	100000 120000	2150 2000	—	10000	0.27 0.24	3Q4
3Q5GT	Beam Power Amplifier	7-pin O.	7AP	Fil.[6]	1.4 2.8	0.1 0.05	Class-A Amplifier	90	— 4.5	90	1.6 1.0	9.5 7.5	—	2100 1800	—	8000	0.27 0.25	3Q5GT
3S4	Power Amplifier Pentode	7-pin B.[8]	7BA	Fil.[6]	1.4 2.8	0.1 0.05	Class-A Amplifier	90	— 7.0	67.5	1.4 1.1	7.4 6.1	100000	1575 1425	—	8000	0.27 0.235	3S4
10	Triode Power Amplifier	4-pin M.	4D	Fil.	7.5	1.25	Class-A Amplifier	425	—39.0	—	—	18.0	5000	1600	8.0	10200	1.6	10
11/12	Triode Detector Amplifier	4-pin M.	4D	Fil.	1.1	0.25	Class-A Amplifier	135	—10.5	—	—	3.0	15000	440	6.6	—	—	11/12
20	Triode Power Amplifier	4-pin S.	4D	Fil.	3.3	0.132	Class-A Amplifier	135	—22.5	—	—	6.5	6300	525	3.3	6500	0.11	20
22	Tetrode R.F. Amplifier	4-pin M.	4K	Fil.	3.3	0.132	R.F. Amplifier	135	— 1.5	67.5	1.3	3.7	325000	500	160	—	—	22
26	Triode Amplifier	4-pin M.	4D	Fil.	1.5	1.05	Class-A Amplifier	180	—14.5	—	—	6.2	7300	1150	8.3	—	—	26
40	Triode Voltage Amplifier	4-pin M.	4D	Fil.	5.0	0.25	Class-A Amplifier	180	— 3.0	—	—	0.2	150000	200	30	—	—	40
4A6G	Twin Triode Amplifier	8-pin O.	8L	Fil.[6]	4[3]	0.06	Class-A Amplifier[4]	90	— 1.5	—	—	2.2	13300	1500	20	—	—	4A6G
					2[3]	0.12	Class-B Amplifier	90	0	—	—	4.6[5]	—	—	—	8000	1.0	
50	Triode Power Amplifier	4-pin M.	4D	Fil.	7.5	1.25	Class-A Amplifier	450	—84.0	—	—	55.0	1800	2100	3.8	4350	4.6	50
6AG5	Pentode R.F. Amplifier	7-pin M.	7BD	Htr.	6.3	0.3	Class-A Amplifier	250 100	200[16] 100[16]	150 100	2.0 1.6	7.0 5.5	800000 300000	5000 4750	—	—	—	6AG5
6C4	Triode Amplifier	7-pin B.[8]	6BG	Htr.	6.3	0.15	Class-A Amplifier	250	— 8.5	—	—	10.5	7700	2200	1.7	—	—	6C4
6J6	Twin Triode	7-pin M.	7BF	Htr.	6.3	0.45	Class-A Amplifier	100	50[16]	—	—	8.5	6000	5300	32	—	—	6J6
71-A	Triode Power Amplifier	4-pin M.	4D	Fil.	5.0	0.25	Class-A Amplifier	180	—43.0	—	—	20.0	1750	1700	3.0	4800	0.79	71-A

TABLE X—SPECIAL RECEIVING TUBES—*Continued*

Type	Name	Base[2]	Socket Connections[1]	Cathode	Fil. or Heater Volts	Fil. or Heater Amps.	Use	Plate Supply Volts	Grid Bias	Screen Volts	Screen Current Ma.	Plate Current Ma.	Plate Resistance, Ohms	Transconductance Micromhos	Amp. Factor	Load Resistance Ohms	Power Output Watts	Type
99	Triode Detector Amplifier	4-pin S.	4D	Fil.	3.3	0.063	Class-A Amplifier	90	— 4.5	—	—	2.5	15500	425	6.6	—	—	99
112A	Triode Detector Amplifier	4-pin M.	4D	Fil.	5.0	0.25	Class-A Amplifier	180	−13.5	—	—	7.7	4700	1800	8.5	—	—	112A
182B/482B	Triode Amplifier	4-pin M.	4D	Fil.	5.0	1.25	Class-A Amplifier	250	−35.0	—	—	18.0	—	1500	5.0	—	—	182B/482B
183/483	Power Triode	4-pin M.	4D	Fil.	5.0	1.25	Class-A Amplifier	250	−60.0	—	—	25.0	18000	1800	3.2	4500	2.0	183/483
257	Power Pentode	5-pin M.	5B	Fil.	5.0	0.3	Class-A Amplifier	110	−21.5	110	7.0	20.0	41000	1350	55	6000	0.8	257
485	Triode	5-pin S.	5A	Htr.	3.0	1.3	Class-A Amplifier	180	— 9.0	—	—	6.0	9300	1350	12.5	—	—	485
864	Triode Amplifier	4-pin S.	4D	Fil.	1.1	0.25	Class-A Amplifier	90	— 4.5	—	—	2.9	13500	610	8.2	—	—	864
954[7]	Pentode Detector, Amplifier	Special	A[7]	Htr.	6.3	0.15	Class-A Amplifier	250	— 3.0	100	0.7	2.0	1.5 megohms	1400	2000	—	—	954
							Bias Detector	250	— 6.0	100	—	Plate current to be adjusted to 0.1 ma. with no signal					—	
955[7]	Triode Detector, Amplifier	Special	B[7]	Htr.	6.3	0.15	Class-A Amplifier	250	— 7.0	—	—	6.3	11400	2200	25	—	—	955
							Oscillator	180	−35.0	—	—	7.0	D.C. Grid Current App. 1.5 ma.			—	0.5	
956[7]	Triple-Grid Variable-μ R.F. Amplifier	Special	A[7]	Htr.	6.3	0.15	R.F. Amplifier	250	— 3.0	100	2.7	6.7	700000	1800	1440	—	—	956
							Mixer	250	−10.0	100	—	—	Oscillator peak volts—7 min.					
957[7]	Triode Det., Amp., Osc.	Special	C[7]	Fil.	1.25	0.05	Class-A Amplifier	135	— 5.0	—	—	2.0	20800	650	13.5	—	—	957
958[7]	Triode A.F. Amp., Osc.	Special	C[7]	Fil.	1.25	0.1	Class-A Amplifier	135	— 7.5	—	—	3.0	10000	1200	12	—	—	958
959[7]	Pentode Det., Amplifier	Special	D[7]	Fil.	1.25	0.05	Class-A Amplifier	135	— 3.0	67.5	0.4	1.7	800000	600	480	—	—	959
7E5/1201	U.h.f. Triode	8-pin L.	Fig. 3[11]	Htr.	6.3	0.15	Class-A Amplifier	180	— 3	—	—	5.5	12000	—	36	—	—	7E5/1201
7C4/1203	U.h.f. Diode	8-pin L.	Fig. 1[11]	Htr.	6.3	0.15	Rectifier	Max. r.m.s. voltage—150						Max. d.c. output current—8 ma.				7C4/1203
1204	U.h.f. Pentode	8-pin L.	Fig. 5[11]	Htr.	6.3	0.15	Class-A Amplifier	250	— 2	100	0.6	1.75	800000	1200	—	—	—	1204
1609	Pentode Amplifier	5-pin S.	5B	Fil.	1.1	0.25	Class-A Amplifier	135	— 1.5	67.5	0.65	2.5	400000	725	300	—	—	1609
9001	Triple-Grid Detector, Amplifier	7-pin B.[8]	7AS	Htr.	6.3	0.15	Class-A Amplifier	250	— 3.0	100	0.7	2.0	Over 1 meg.	1400	—	—	—	9001
							Mixer	250	— 5.0	100	Osc. peak voltage 4 volts			550	—	—	—	
9002	Triode Det., Amp., Osc.	7-pin B.[8]	7AW	Htr.	6.3	0.15	Class-A Amplifier	250	— 7.0	—	—	6.3	11400	2200	25	—	—	9002
9003	Triple-Grid Variable-μ R.F. Amplifier	7-pin B.[8]	7AS	Htr.	6.3	0.15	Class-A Amplifier	250	— 3.0	100	2.7	6.7	700000	1800	—	—	—	9003
							Mixer	250	−10.0	100	Osc. peak voltage 9 volts			600	—	—	—	
9004	U.h.f. Diode	Special	E[7]	Htr.	6.3	0.15	Detector	Max. a.c. voltage—117. Max. d.c. output current—5 ma.										9004
9005	U.h.f. Diode	Special	F[7]	Htr.	3.6	0.165	Detector	Max. a.c. voltage—117. Max. d.c. output current—1 ma.										9005
M54	Tetrode Power Amplifier	None[9]	—	Fil.	0.625[10]	0.04	Class-A Amplifier	30	0	30	0.06	0.5	130000	200	26	35000	0.005	M54
M64	Tetrode Voltage Amplifier	None[9]	—	Fil.	0.625[10]	0.02	Class-A Amplifier	30	0	—	—	0.03	200000	110	25	—	—	M64
M74	Tetrode Voltage Amplifier	None[9]	—	Fil.	0.625[10]	0.02	Class-A Amplifier	30	0	7.0	0.01	0.02	500000	125	70	—	—	M74
XXB	Twin Triode Frequency Converter	7-pin L.	Fig. 9[11]	Fil.[6, 21]	2.8 /1.4 3.2[18] /1.6	0.05 /0.10 — —	Frequency Converter[17]	90[12]	0	—	—	4.5[19] 4.5[20]	11200[19] 11200[20]	1300[19] 1300[20]	14.5[12]	—	—	XXB
									−3	—	—	1.4[19] 1.4[20]	1900[19] 1900[20]	760[19] 760[20]	14.5[12]	—	—	
XXFM	Twin-Diode Triode	8-pin L.	Fig. 10[11]	Htr.	6.3	0.3	Special Detector Amplifier	250[13]	−1	—	—	1.9	6700	1500	100	—	—	XXFM
								100[13]	0	—	—	1.2	85000	1000	85	—	—	
								100[14]	—	—	—	4[15]	—	—	—	—	—	

[1] Refer to Receiving Tube Diagrams.
[2] M.—medium; S.—small; O.—octal; L.—loktal.
[3] Cathode terminal is mid-point of filament; use series connection with 4 volts, parallel with 2 volts.
[4] Triodes connected in parallel. [5] Idling current, both plates.
[6] Filament mid-point tap permits series or parallel connection.
[7] "Acorn" type; miniature unbased tubes for ultrahigh frequencies. See Acorn Tube Socket Connections.
[8] Special 7-pin "button" base, miniature type.
[9] No base; tinned wire leads. Dimensions 0.36" x 1.10".
[10] Intended for series-parallel operation on 1.4-volt dry cell.
[11] See Supplementary Base Diagrams.
[12] Both Sections. [13] Amplifier plate.
[14] Diode plates (A.C. max. volts per plate).
[15] Max. D.C. output. [16] Cathode resistor-ohms.
[17] Section No. 2 recommended for h.f.o.
[18] Dry battery operation.
[19] Section No. 1. [20] Section No. 2.
[21] { Series operation, pin 8 is neg. & pin 9 pos.
{ Parallel operation, pins 1 & 8 tied together for pos.

TABLE XI — CONTROL AND REGULATOR TUBES

Type	Name	Base [1]	Socket Connections [2]	Cathode	Fil. or Heater Volts	Fil. or Heater Amps.	Use	Peak Anode Voltage	Max. Anode Current [3]	Minimum Starting Voltage	Operating Voltage	Operating Current	Grid Resistor	Tube Voltage Drop	Type
0A4G	Gas Triode Starter-Anode Type	6-pin O.	4V	Cold	—	—	Cold-Cathode Starter-Anode Relay Tube	With 105–120-volt a.c. anode supply, peak starter-anode a.c. voltage is 70, peak r.f. voltage 55							0A4G
1C21	Gas Triode Glow-Discharge Type	6-pin O.	4V	Cold	—	—	Relay Tube	125–145	25	66 [15]	—	—	—	73	1C21
							Voltage Regulator		0.1 [15]	180 [17]	—	—	—	55 [15]	
2A4G	Gas Triode Grid Type	7-pin O.	5S	Fil.	2.5 [10]	2.5	Control Tube	200	100	—	—	—	—	15	2A4G
874	Voltage Regulator	4-pin M.	4S	—	—	—	Voltage Regulator [5]	—	—	125	90	10–50	—	—	874
876	Current Regulator	Mogul	—	—	—	—	Current Regulator [5]	—	—	—	40–60	1.7	—	—	876
884	Gas Triode Grid Type	6-pin O.	6Q	Htr.	6.3	0.6	Sweep Circuit Oscillator	300	300	—	—	2	25000 [4]	—	884
							Grid-Controlled Rectifier	350	300	—	—	75	25000 [4]	—	
885	Gas Triode Grid Type	5-pin S.	5A	Htr.	2.5	1.4	Same as Type 884	Characteristics same as Type 884							885
886	Current Regulator	Mogul	—	—	—	—	Current Regulator [5]	—	—	—	40–60	2.05	—	—	886
967	Mercury Vapor Triode	4-pin M.	F [10]	Fil.	2.5	5.0	Grid-Controlled Rectifier	2500	500	— 5 [11]	—	—	—	10–24	967
991	Voltage Regulator	Bayonet [14]	—	—	—	—	Voltage Regulator	—	—	87	55–60	2.0	—	—	991
2050	Gas Tetrode	8-pin O.	8BA	Htr.	6.3	0.6	Grid-Controlled Rectifier	650	100	— 4 [12]	—	—	0.1–10 [18]	8	2050
2051	Gas Tetrode	8-pin O.	8BA	Htr.	6.3	0.6	Grid-Controlled Rectifier	350	75	— 4 [13]	—	—	0.1–10 [18]	14	2051
KY21	Gas Triode Grid Type	4-pin M.	—	Fil.	2.5	10.0	Grid-Controlled Rectifier	—	—	—	3000	500	—	—	KY21
RK62	Gas Triode Grid Type	4-pin S.	4D	Fil.	1.4	0.05	Relay Tube [6]	45	1.5	—	30–45	0.1–1.5	—	15	RK62
RM208	Permatron	4-pin M.	—	Fil.	2.5	5.0	Controlled Rectifier [7]	7500 [8]	1000	—	—	—	—	15	RM208
RM209	Permatron	4-pin M.	—	Fil.	5.0	10.0	Controlled Rectifier [7]	7500 [8]	5000	—	—	—	—	15	RM209
VR75-30	Voltage Regulator	6-pin O.	4SB	—	—	—	Voltage Regulator	—	—	105	75	5–30 [9]	—	—	VR75-30
0B3/ VR90-30	Voltage Regulator	7-pin O.	4SB	—	—	—	Voltage Regulator	—	—	125	90	5–30 [9]	—	—	0B3/ VR90-30
VR105-30	Voltage Regulator	6-pin O.	4SB	—	—	—	Voltage Regulator	—	—	137	105	5–30 [9]	—	—	VR105-30
0D3/ VR150-30	Voltage Regulator	6-pin O.	4SB	—	—	—	Voltage Regulator	—	—	180	150	5–40 [9]	—	—	0D3/ VR150-30
KY866	Mercury Vapor Triode	4-pin M.	F [10]	Fil.	2.5	5.0	Grid-Controlled Rectifier	10000	1000	100–150	—	—	—	—	KY866

[1] M. — medium; S. — small; O. — octal.
[2] Refer to Receiving Tube Diagrams.
[3] In ma.
[4] Not less than 1000 ohms per grid volt; 500,000 ohms max.
[5] For use in series with power transformer primary.
[6] For use as self-quenching super-regenerative detector with high-resistance relay (5000–10000 ohms) in anode circuit.
[7] For use as grid-controlled rectifier or with external magnetic control. RM-208 has characteristics of 866, RM-209 of 872.
[8] When under control peak inverse rating is reduced to 2500.
[9] Sufficient resistance must be used in series with tube to limit current to maximum current rating.
[10] Refer to Transmitting Tube Diagrams.
[11] At 1000 anode volts.
[12] At 350 anode volts and 0 Grid No. 2 volts.
[13] At 650 anode volts and 0 Grid No. 2 volts.
[14] Candelabra type, double contact.
[15] Grid.
[16] Filament voltage should be applied 2 seconds before using.
[17] Grid tied to plate.
[18] Megohms.

TABLE XII — CATHODE-RAY TUBES AND KINESCOPES

Type	Name	Socket Connections [1]	Heater Volts	Heater Amps.	Use	Size	Anode No. 2 Voltage	Anode No. 1 Voltage	Cut-Off Grid Voltage [2]	Grid No. 2 Voltage	Signal-Swing Voltage	Max. Input Voltage [3]	Screen Input Power [4]	Deflection Sensitivity [5] D_1 D_2	Deflection Sensitivity [5] D_3 D_4	Screen Persistence [6]	Pattern Color [6]	Type
2AP1	Electrostatic Cathode-Ray	11B	6.3	0.6	Oscillograph Television	2″	1000	250	— 60	—	—	660		0.11	0.13	Med.	Green	2AP1
							500	125	— 30	—	—			0.22	0.26			
3AP1/ 906-P1 3AP4/ 906-P4	Electrostatic Cathode-Ray	7N	2.5	2.1	Oscillograph Television	3″	1500	475	— 50	—	—	600	10	0.22	0.23	P1	Green	3AP1/ 906-P1
							1000	285	— 34	—	—			0.33	0.35	P4	White	3AP4/ 906-P4
							600	170	— 20	—	—			0.55	0.58			
3BP1	Electrostatic Cathode-Ray	14A	6.3	0.6	Oscillograph Television	3″	2000	575	— 60	—	—	550	—	0.115	0.155	Med.	Green	3BP1
							1500	430	— 45	—	—			0.153	0.207			

TABLE XII — CATHODE-RAY TUBES AND KINESCOPES — *Continued*

Type	Name	Socket Connections [1]	Heater Volts	Heater Amps.	Use	Size	Anode No. 2 Voltage	Anode No. 1 Voltage	Cut-Off Grid Voltage [2]	Grid No. 2 Voltage	Signal-Swing Voltage	Max. Input Voltage [3]	Screen Input Power [4]	Deflection Sensitivity [5] D_1 D_2	Deflection Sensitivity [5] D_3 D_4	Screen Persistence [6]	Pattern Color [6]	Type
3EP1/ 1806-P1	Electrostatic Cathode-Ray	11A	6.3	0.6	Oscillograph Television	3″	2000	575	− 60	—	—	550	—	0.115	0.154	Med.	Green	3EP1/ 1806-P1
							1500	430	− 45	—	—			0.153	0.205			
5AP1/ 1805-P1 5AP4/ 1805-P4	Electrostatic Picture Tube	10A	6.3	0.6	Oscillograph Television	5″	2000	575	− 35	—	—	500	10	0.17	0.21	P1	Green	5AP1/ 1805-P1
							1500	430	− 27					0.23	0.28	P4	White	5AP4/ 1805-P4
5BP1/ 1802-P1 5BP4/ 1802-P4	Electrostatic Picture Tube	10A	6.3	0.6	Oscillograph Television	5″	2000	425	− 35	—	—	500	10	0.3	0.33	P1	Green	5BP1/ 1802-P1
							1500	310	− 21	—	—			0.4	0.44	P4	White	5BP4/ 1802-P4
5HP1 5HP4	Electrostatic Cathode-Ray	10A	6.3	0.6	Oscillograph	5″	2000	425	− 40	—	—	500	—	0.3	0.33	P1	Green	5HP1
							1500	310	− 30					0.4	0.44	P4	White	5HP4
7AP4	Electromagnetic Picture Tube	5AJ	2.5	2.1	Television	7″	3500	1000	−67.5	—	—	—	2.5	—	—	P4	White	7AP4
7CP1/ 1811-P1	Electromagnetic Cathode-Ray	6AZ	6.3	0.6	Oscillograph	7″	7000	1470	− 45	250	—	—	—	—	—	Med.	Green	7CP1/ 1811-P1
							4000	840	− 45	250	—			—	—			
9AP4/ 1804-P4	Electromagnetic Picture Tube	6AL	2.5	2.1	Television	9″	7000	1425	− 40	250	25	—	10	—	—	P4	White	9AP4/ 1804-P4
							6000	1225	− 38									
9CP4	Electromagnetic Picture Tube	4AF	2.5	2.1	Television	9″	7000	—	−110	—	25	—	10	—	—	P4	White	9CP4
9JP1/ 1809-P1	Electrostatic Cathode-Ray	Fig. 16 [11]	2.5	2.1	Oscillograph	9″	5000	1570	− 90	—	—	3000	—	0.136	—	P1	Green	9JP1/ 1809-P1
							2500	785	− 45					0.272	—			
12AP4/ 1803-P4	Electromagnetic Picture Tube	6AL	2.5	2.1	Television	12″	7000	1460	− 75	250	25	—	10	—	—	P4	White	12AP4/ 1803-P4
							6000	1240										
12CP4	Electromagnetic Picture Tube	4AF	2.5	2.1	Television	12″	7000	—	−110	—	25	—	10	—	—	P4	White	12CP4
902	Electrostatic Cathode-Ray	A [9]	6.3	0.6	Oscillograph	2″	600	150	− 60	—	—	350	5	0.19	0.22	P1	Green	902
903 [10]	Electromagnetic Cathode-Ray	6AL	2.5	2.1	Oscillograph	9″	7000	1360	−120	250	—	—	10	—	—	P1	Green	903
904	Electrostatic-Magnetic Cathode-Ray	C [9]	2.5	2.1	Oscillograph	5″	4600	970	− 75	250	—	4000	10	0.09	—	P1	Green	904
905	Electrostatic Cathode-Ray	D [9]	2.5	2.1	Oscillograph	5″	2000	450	− 35	—	—	1000	10	0.19	0.23	P1	Green	905
907	Electrostatic Cathode-Ray	D [9]	2.5	2.1	Oscillograph	5″	Characteristics same as Type 905							—	—	P5	Blue	907
908	Electrostatic Cathode-Ray	7N	2.5	2.1	Oscillograph	3″	Characteristics same as Type 3AP1/906P1							—	—	P5	Blue	908
909	Electrostatic Cathode-Ray	D [9]	2.5	2.1	Oscillograph	5″	Characteristics same as Type 905							—	—	P2	Blue	909
910	Electrostatic Cathode-Ray	7N	2.5	2.1	Oscillograph	3″	Characteristics same as Type 906/5AP1							—	—	P2	Blue	910
911 [10]	Electrostatic Cathode-Ray	7N	2.5	2.1	Oscillograph	3″	Characteristics same as Type 906/5AP1 [7]							—	—	P1	Green	911
912	Electrostatic Cathode-Ray	F [9]	2.5	2.1	Oscillograph	5″	10000	2000	− 66	250	—	7000	10	0.041	0.051	P1	Green	912
913	Electrostatic Cathode-Ray	A [9]	6.3	0.6	Oscillograph	1″	500	100	− 65	—	—	250	5	0.07	0.10	P1	Green	913
914	Electrostatic Cathode-Ray	G [9]	2.5	2.1	Oscillograph	9″	7000	1450	− 50	250	—	3000	10	0.073	0.093	P1	Green	914
1800 [10]	Electromagnetic Kinescope	6AL	2.5	2.1	Television	9″	6000	1250	− 75	250	25	—	10	—	—	P3	Yellow	1800
1801 [10]	Electromagnetic Kinescope	H [9]	2.5	2.1	Television	5″	3000	450	− 35	—	20	—	10	—	— [8]	P3	Yellow	1801
2002	Electrostatic Cathode-Ray	A [9]	6.3	0.6	Oscillograph	2″	600	120	—	—	—	—	—	0.16	0.17	Med.	Green	2002
2005	Electrostatic Cathode-Ray	A [8 9]	2.5	2.1	Television	5″	2000	1000	− 35	200	—	—	10	0.5	0.56	—	—	2005
24-XH	Electrostatic Cathode-Ray	A [9]	6.3	0.6	Oscilloscope	2″	600	120	− 60	—	—	—	10	0.14	0.16	Short	Green	24-XH

[1] Refer to Receiving Tube Diagrams.
[2] For current cut-off. In terms of average center values; should be adjustable to ± 50 per cent to take care of individual tubes. Control grid should never be allowed to go positive.
[3] Between Anode No. 2 and any deflecting plate.
[4] In mw./sq. cm., max.
[5] In mm./volt d.c.
[6] Phosphorescent material used in screen determines persistence. P1 is phosphor of medium persistence, P2 long, P3 also medium but especially suited for television, P4 same as P3 but white, and P5 short persistence for oscillographic use.
[7] The 911 is identical to 906 except for the gun material, which is designed to be especially free from magnetization effects.
[8] Cathode connected to pin 7.
[9] Refer to Cathode-Ray Tube Base Diagrams.
[10] Obsolete type.
[11] See Supplementary Base Diagrams.

TABLE XIII — RECTIFIERS — RECEIVING AND TRANSMITTING

See also Table XI — Control and Regulator Tubes

Type No.	Name	Base [2]	Socket Connections [1]	Cathode	Fil. or Heater		Max. A.C. Voltage Per Plate	Max. D.C. Output Current Ma.	Max. Inverse Peak Voltage	Max. Peak Plate Current Ma.	Type [7]
					Volts	Amps.					
BA	Full-Wave Rectifier	4-pin M.	4J	Cold	—	—	350	350	Tube drop 80 v.		G
BH	Full-Wave Rectifier	4-pin M.	4J	Cold	—	—	350	125	Tube drop 90 v.		G
BR	Half-Wave Rectifier	4-pin M.	4J	Cold	—	—	300	50	Tube drop 60 v.		G
ØZ4	Full-Wave Rectifier	6-pin O.	4R	Cold	—	—	350	30–75	1250	200	G
1 [5]	Half-Wave Rectifier	4-pin S.	4G	Htr.	6.3	0.3	350	50	1000	400	M
1-V [5]	Half-Wave Rectifier	4-pin S.	4G	Htr.	6.3	0.3	350	50	—	—	V
2V3G	Half-Wave Rectifier	6-pin O.	6BA	Fil.	2.5	5.0	—	2.0	16500	12	V
2W3	Half-Wave Rectifier	5-pin O.	4X	Fil.	2.5	1.5	350	55	—	—	V
2X2	Half-Wave Rectifier	4-pin M.	4B	Fil.	2.5	1.75	4500 [11]	7.5	—	—	V
2Y2	Half-Wave Rectifier	4-pin M.	4P	Fil.	2.5	1.75	4400 [11]	5.0	—	—	V
2Z2	Half-Wave Rectifier	4-pin M.	4B	Fil.	2.5	1.5	350	50	—	—	V
5R4GY	Full-Wave Rectifier	5-pin M.	5T	Fil.	5.0	2.0	900 [10] 950 [18]	150 [10] 175 [18]	2800	650	V
5T4 [3]	Full-Wave Rectifier	5-pin O.	5T	Fil.	5.0	3.0	450	250	1250	800	V
5U4G	Full-Wave Rectifier	8-pin O.	5T	Fil.	5.0	3.0	Same as Type 5Z3				V
5V4G	Full-Wave Rectifier	8-pin O.	5L	Htr.	5.0	2.0	Same as Type 83V				V
5W4	Full-Wave Rectifier	5-pin O.	5T	Fil.	5.0	1.5	350	110	1000	—	V
5X3	Full-Wave Rectifier	4-pin M.	4C	Fil.	5.0	2.0	1275	30	—	—	V
5X4G	Full-Wave Rectifier	8-pin O.	5Q	Fil.	5.0	3.0	Same as 5Z3				V
5Y3G	Full-Wave Rectifier	5-pin O.	5T	Fil.	5.0	2.0	Same as Type 80				V
5Y4G	Full-Wave Rectifier	8-pin O.	5Q	Fil.	5.0	2.0	Same as Type 80				V
5Z3	Full-Wave Rectifier	4-pin M.	4C	Fil.	5.0	3.0	500	250	1400	—	V
5Z4 [3]	Full-Wave Rectifier	5-pin O.	5L	Htr.	5.0	2.0	400	125	1100	—	V
6W5G	Full-Wave Rectifier	6-pin O.	6S	Htr.	6.3	0.9	350	100	1250	350	V
6X5 [3]	Full-Wave Rectifier	6-pin O.	6S	Htr.	6.3	0.5	350	75	—	—	V
6Y3	Half-Wave Rectifier	—	4AC	Fil.	6.3	0.7	5000	7.5	14000	100	V
6Y5	Full-Wave Rectifier	6-pin S.	6J	Htr.	6.3	0.8	350	50	—	—	V
6Z3	Half-Wave Rectifier	4-pin M.	4G	Fil.	6.3	0.3	350	50	—	—	V
6Z4	Full-Wave Rectifier	5-pin S.	5D	Htr.	6.3	0.5	350	50	—	—	V
6Z5	Full-Wave Rectifier	6-pin S.	6K	Htr.	6.3	0.6	230	60	—	—	V
6ZY5G	Full-Wave Rectifier	6-pin O.	6S	Htr.	6.3	0.3	350	35	1000	150	V
7Y4	Full-Wave Rectifier	8-pin L.	5AB	Htr.	7.0 [12]	0.53	350	60	—	—	V
7Z4	Full-Wave Rectifier	8-pin L.	5AB	Htr.	7.0 [12]	0.96	450 [6] 325 [10]	100	1250	300	V
12A7	Rectifier-Pentode [14]	7-pin S.	7K	Htr.	12.6	0.3	125	30	—	—	V
12Z3	Half-Wave Rectifier	4-pin S.	4G	Htr.	12.6	0.3	250	60	—	—	V
12Z5	Voltage-Doubling Rectifier	7-pin M.	7L	Htr.	12.6	0.3	225	60	—	—	V
14Y4	Full-Wave Rectifier	8-pin L.	5AB	Htr.	14.0 [12]	0.32	450 [6] 325 [10]	70	1250	210	V
14Z3	Half-Wave Rectifier	4-pin S.	4G	Htr.	14 [12]	0.3	250	60	—	—	V
25A7G	Rectifier-Pentode [14]	8-pin O.	8F	Htr.	25	0.3	125	75	—	—	V
25X6GT	Voltage-Doubling Rectifier	7-pin O.	7Q	Htr.	25	0.15	125	60	—	—	V
25Y4GT	Half-Wave Rectifier	6-pin O.	5AA	Htr.	25	0.15	125	75	—	—	V
25Y5	Voltage-Doubling Rectifier	6-pin S.	6E	Htr.	25	0.3	250	85	—	—	V
25Z3	Half-Wave Rectifier	4-pin S.	4G	Htr.	25	0.3	250	50	—	—	V
25Z4	Half-Wave Rectifier	6-pin O.	5AA	Htr.	25	0.3	125	125	—	—	V
25Z5	Rectifier-Doubler	6-pin S.	6E	Htr.	25	0.3	125	100	—	500	V
25Z6	Rectifier-Doubler	7-pin O.	7Q	Htr.	25	0.3	125	100	—	500	V
32L7GT	Rectifier-Tetrode [14]	8-pin O.	8F	Htr.	32.5	0.3	125	60	—	—	V
35Y4	Half-Wave Rectifier	8-pin O.	5AL	Htr.	35 [8]	0.15	235	100	700	600	V
35Z3-LT	Half-Wave Rectifier	8-pin L.	4Z	Htr.	35	0.15	250 [13]	100	700	600	V
35Z4GT	Half-Wave Rectifier	6-pin O.	5AA	Htr.	35	0.15	250	100	—	—	V
35Z5G	Half-Wave Rectifier	6-pin O.	6AD	Htr.	35 [8]	0.15	125	100	—	—	V
35Z6G	Voltage Doubler	6-pin O.	7Q	Htr.	35	0.3	125	110	—	500	V

TABLE XIII — RECTIFIERS — RECEIVING AND TRANSMITTING — *Continued*

See also Table XI — Control and Regulator Tubes

Type No.	Name	Base [2]	Socket Connections [1]	Cathode	Fil. or Heater		Max. A.C. Voltage Per Plate	Max. D.C. Output Current Ma.	Max. Inverse Peak Voltage	Max. Peak Plate Current Ma.	Type [7]
					Volts	Amps.					
40Z5GT	Half-Wave Rectifier	6-pin O.	6AD	Htr.	40 [8]	0.15	125	100	—	—	V
45Z3	Half-Wave Rectifier	7-pin B.	5AM	Htr.	45	0.075	117	65	350	390	V
45Z5GT	Half-Wave Rectifier	6-pin O.	6AD	Htr.	45 [8]	0.15	125	100	—	—	V
50Y6GT	Full-Wave Rectifier	7-pin O.	7Q	Htr.	50	0.15	125	85	—	—	V
50Z6G	Voltage-Doubling Rectifier	7-pin O.	7Q	Htr.	50	0.3	125	150	—	—	V
50Z7G	Voltage-Doubling Rectifier	8-pin O.	8AN	Htr.	50	0.15	117	65	—	—	V
70A7GT	Rectifier-Tetrode [14]	8-pin O.	8AA	Htr.	70	0.15	125	60	—	—	V
70L7GT	Rectifier-Tetrode [14]	8-pin O.	8AA	Htr.	70	0.15	117	70	—	350	V
80	Full-Wave Rectifier	4-pin M.	4C	Fil.	5.0	2.0	350 400 550	125 110 135	—	—	V
81	Half-Wave Rectifier	4-pin M.	4B	Fil.	7.5	1.25	700	85	—	—	V
82	Full-Wave Rectifier	4-pin M.	4C	Fil.	2.5	3.0	500	125	1400	400	M
83	Full-Wave Rectifier	4-pin M.	4C	Fil.	5.0	3.0	500	250	1400	800	M
83-V	Full-Wave Rectifier	4-pin M.	4L	Htr.	5.0	2.0	400	200	1100	—	V
84/6Z4	Full-Wave Rectifier	5-pin S.	5D	Htr.	6.3	0.5	350	60	1000	—	V
117L7GT/ 117M7GT	Rectifier-Tetrode [14]	8-pin O.	8AO	Htr.	117	0.09	117	75	—	—	V
117N7GT	Rectifier-Tetrode [14]	8-pin O.	8AV	Htr.	117	0.09	117	75	350	450	V
117P7GT	Rectifier-Tetrode [14]	8-pin O.	8AV	Htr.	117	0.09	117	75	350	450	V
117Z4GT	Half-Wave Rectifier	6-pin O.	5AA	Htr.	117	0.04	117	90	350	—	V
117Z6GT	Full-Wave Rectifier	7-pin O.	7Q	Htr.	117	0.075	235	60	700	360	V
217-A	Half-Wave Rectifier	4-pin J.	T-3A [4]	Fil.	10	3.25	—	—	3500	600	V
217-C	Half-Wave Rectifier	4-pin J.	T-3A [4]	Fil.	10	3.25	—	—	7500	600	V
Z225 [17]	Half-Wave Rectifier	4-pin M.	T-4AD [4]	Fil.	2.5	5.0	—	250 [10]	10000	1000	M
HK253	Half-Wave Rectifier	4-pin J.	T-3A [4]	Fil.	5.0	10	—	350	10000	1500	V
816	Half-Wave Rectifier	4-pin S.	T-4AD [4]	Fil.	2.5	2.0	—	125	5000	500	M
836	Half-Wave Rectifier	4-pin M.	T-4AD [4]	Htr.	2.5	5.0	—	—	5000	1000	V
866A/866	Half-Wave Rectifier	4-pin M.	T-4AD [4]	Fil.	2.5	5.0	—	250 [10]	10000	1000	M
866B	Half-Wave Rectifier	4-pin M.	T-4AD [4]	Fil.	5.0	5.0	—	—	8500	1000	M
866Jr.	Half-Wave Rectifier	4-pin M.	4B	Fil.	2.5	2.5	1250	250 [9]	—	—	M
HY866Jr.	Half-Wave Rectifier	4-pin M.	T-4AD [4]	Htr.	2.5	3.0	1250	250 [9]	3500	—	M
RK866	Half-Wave Rectifier	4-pin M.	T-4AD [4]	Fil.	2.5	5.0	—	250 [10]	10000	1000	M
871	Half-Wave Rectifier	4-pin M.	T-4AD [4]	Fil.	2.5	2.0	1750	250	5000	500	M
878 [11]	Half-Wave Rectifier	4-pin M.	T-4AD [4]	Fil.	2.5	5.0	7100	5	20000	—	V
879 [11]	Half-Wave Rectifier	4-pin S.	T-4AD [4]	Fil.	2.5	1.75	2650	7.5	7500	100	V
872A/872	Half-Wave Rectifier	4-pin J.	T-3A [4]	Fil.	5.0	7.5	—	1250	10000	5000	M
975A	Half-Wave Rectifier	4-pin J.	T-3A [4]	Fil.	5.0	10.0	—	1500	15000	6000	M
1616	Half-Wave Rectifier	4-pin M.	T-4AD [4]	Fil.	2.5	5.0	—	130	5500	800	V
8008	Half-Wave Rectifier	4-pin [16]	Fig. 9 [15]	Fil.	5.0	7.5	—	1250	10000	5000	M
8013	Half-Wave Rectifier	4-pin M.	T-4AD [4]	Fil.	2.5	5.0	—	20	40000	150	V
8016	Half-Wave Rectifier	6-pin O.	Fig. 18 [15]	Fil.	1.25	0.2	—	2.0	10000	7.5	V
RK19	Full-Wave Rectifier	4-pin M.	T-3A [4]	Htr.	7.5	2.5	1250	200 [10]	3500	600	V
RK21	Half-Wave Rectifier	4-pin M.	T-4AD [4]	Htr.	2.5	4.0	1250	200 [10]	3500	600	V
RK22	Full-Wave Rectifier	4-pin M.	T-4AG [4]	Htr.	2.5	8.0	1250	200 [10]	3500	600	V
RK60	Full-Wave Rectifier	4-pin M.	T-4AG [4]	Fil.	5	3.0	750	250	2120	—	V

[1] Refer to Receiving Tube Diagrams.
[2] M.—medium; S.—small; O.—octal; L.—loktal; J.—jumbo B.—button.
[3] Metal tube series.
[4] Refer to Transmitting Tube Diagrams.
[5] Types 1 and 1-V interchangeable.
[6] With input choke of at least 20 henrys.
[7] M.—Mercury-vapor type; V.—high-vacuum type; G.—Gaseous Type.
[8] Tapped for pilot lamps.
[9] Per pair with choke input.
[10] Condenser input.
[11] For use with cathode-ray tubes.
[12] Maximum rating, corresponding to 130-volt line condition; normal rating is 12.6 v. for 117-v. line.
[13] With 100 ohms min. resistance in series with plate; without series resistor, maximum r.m.s. plate rating is 117 volts.
[14] For other data, see Table IX.
[15] See Supplementary Base Diagrams.
[16] Same as 872A/872 except for heavy-duty push-type base. Fil. connected to pins 2 and 3, plate to top cap.
[17] Same as 872A/872 except for small envelope.
[18] Choke input.

TABLE XIV — TRIODE TRANSMITTING TUBES

Type	Max. Plate Dissipation Watts	Cathode		Max. Plate Voltage	Max. Plate Current Ma.	Max. D.C. Grid Current Ma.	Amp. Factor	Interelectrode Capacitances ($\mu\mu$fd.)			Base [1]	Socket Connections [2]	Typical Operation	Plate Voltage	Grid Voltage	Plate Current Ma.	D.C. Grid Current Ma.	Approx. Grid Driving Power Watts [3]	Approx. Carrier Output Power Watts	Type
		Volts	Amps.					Grid to Fil.	Grid to Plate	Plate to Fil.										
RK24**	1.5	2.0	0.12	180	20	6.0	8.0	3.5	5.5	3.0	4-pin S.	T-4B	Class-C Amp.-Oscillator	180	— 45	16.5	6.0	0.5	2.0	RK24
6J6 [7]	1.5	6.3	0.45	150	30	16	32	2.2	1.6	0.4	7-pin M.	7BF [15]	Class-C Amp. (Telegraphy)	150	— 10	30	16	0.35	3.5	6J6
HY114B [5]***	1.75	1.4	0.155	180	12	2.5	12	1.0	1.3	1.0	5-pin O.	T-8AC	Class-C Amp.-Oscillator	180	— 30	12	1.5	0.15	1.6 [11]	HY114B
													Class-C Amp.-Plate-Mod.	180	— 30	12	1.5	0.3	1.6 [11]	
3A5 [7]	2.0	1.4 2.8	0.22 0.11	135	30	5.0	15	0.9	3.2	1.0	7-pin B.	7BC [15]	Class-C Amp.-Oscillator	135	— 20	30	5.0	0.2	2.0	3A5
HY24* [5]	2.0	2.0	0.13	180	20	4.5	9.3	2.7	5.4	2.3	4-pin S.	T-4B	Class-C Amp. (Telegraphy)	180	— 45	20	4.5	0.2	2.7	HY24
													Class-C Amp. (Telephony)	180	— 45	20	4.5	0.3	2.5	
RK33* [4 7]	2.5	2.0	0.12	250	20	6.0	10.5	3–2 [7]	3–2 [7]	2.5	7-pin S.	T-7DA	Class-C Amp.-Oscillator	250	— 60	20	6.0	0.54	3.5	RK33
2C22	3.5	6.3	0.3	500	——	——	20	2.2 [16]	3.6	0.7	8-pin O	4AM [15]	Class-C Amp. (Telegraphy)	——	——	——	——	——	——	2C22
HY615***	3.5	6.3	0.175	300	20	4.0	20	1.4	1.6	1.2	5-pin O.	T-8AG	Class-C Amp.-Oscillator	300	— 35	20	1.4	0.4	4.0 [11]	HY615
													Class-C Amp. Plate-Mod.	300	— 35	20	2.0	0.75	4.0 [11]	
HY6J5GTX*	3.5	6.3	0.3	250	20	4.0	20	3.8	2.7	3.0	6-pin O.	T-8AD	Class-C Amp. (Telegraphy)	250	— 30	20	2.0	0.2	3	HY6J5GTX
													Class-C Amp. (Telephony)	250	— 30	20	2.5	0.4	3	
6C4	5.0	6.3	0.15	300	25	8.0	17	1.8	1.6	1.3	7-pin B.	6BG [15]	Class-C Amp.-Oscillator	300	— 27	25	7.0	0.35	5.5	6C4
1626	5.0	12.6	0.25	250	25	8.0	5.0	3.2	4.4	3.0	8-pin O.	T-8AD	Class-C Amp.-Oscillator	250	— 70	25	5.0	0.5	4.0	1626
RK34*** [7]	10	6.3	0.8	300	80	20	13	4.2	2.7	0.8	7-pin M.	T-7DC	Class-C Amp.-Oscillator	300	— 36	80	20	1.8	16	RK34
205D	14	4.5	1.6	400	50	10	7.2	5.2	4.8	3.3	4-pin M.	T-4B	Class-C Amp.-Oscillator	400	−112	45	10	1.5	10	205D
													Class-C Amp. (Plate-Mod.)	350	−144	35	10	1.7	7.1	
843	15	2.5	2.5	450	40	7.5	7.7	4.0	4.5	4.0	5-pin M.	T-5B	Class-C Amp.-Oscillator	450	−140	30	5.0	1.0	7.5	843
													Class-C Amp. (Plate-Mod.)	350	−150	30	7.0	1.6	5.0	
RK59 [7]	15	6.3	1.0	500	90	25	25	5.0	9.0	1.0	4-pin M.	T-4D	Class-C Amp.-Oscillator	500	— 60	90	14	1.3	32	RK59
HY75* [5]	15	6.3	2.5	450	100	20	10	1.8	——	0.95	5-pin O.	T-8AC	Class-C Amp.-Oscillator	450	— 60	100	15	1.5	21 [11]	HY75
													Class-C Amp. Plate-Mod.	450	— 60	80	20	2.5	16 [11]	
1602	15	7.5	1.25	450	60	15	8.0	4.0	7.0	3.0	4-pin M.	T-4B	Class-C Amp. (Telegraphy)	450	−115	55	15	3.3	13	1602
													Class-C Amp. (Telephony)	350	−135	45	15	3.5	8.0	
841	15	7.5	1.25	450	60	20	30	4.0	7.0	3.0	4-pin M.	T-4B	Class-C Amp. (Telegraphy)	450	— 34	50	15	1.8	15	841
													Class-C Amp. (Telephony)	350	— 47	50	15	2.0	11	
10 RK10* [4]	15	7.5	1.25	450	65	15	8.0	3.0	8.0	4.0	4-pin M.	T-4B	Class-C Amp. (Telegraphy)	450	−100	65	15	3.2	19	10 RK10
													Class-C Amp. (Telephony)	350	−100	50	12	2.2	12	
RK100 [4]	15	6.3	0.9	150	250	100	40	23	19	3.0	6-pin M.	T-6B	Class-C Oscillator [10]	110	——	80	8.0	——	3.5	RK100
													Class-C Amplifier [10]	110	——	185	40	2.1	12	
1608	20	2.5	2.5	425	95	25	20	8.5	9.0	3.0	4-pin M.	T-4B	Class-C Amp. (Telegraphy)	425	— 90	95	20	3.0	27	1608
													Class-C Amp. (Telephony)	350	— 80	85	20	3.0	18	
310	20	7.5	1.25	600	70	15	8.0	4.0	7.0	2.2	4-pin M.	T-4B	Class-C Amp. (Telegraphy)	600	−150	65	15	4.0	25	310
													Class-C Amp. (Telephony)	500	−190	55	15	4.5	18	
801-A/801*	20	7.5	1.25	600	70	15	8.0	4.5	6.0	1.5	4-pin M.	T-4B	Class-C Amp. (Telegraphy)	600	−150	65	15	4.0	25	801-A/801
													Class-C Amp. (Telephony)	500	−190	55	15	4.5	18	
HY801-A /801*	20	7.5	1.25	600	70	15	8.0	4.5	6.0	1.5	4-pin M.	T-4B	Class-C Amp. (Telegraphy)	600	−200	70	15	4.0	30	HY801A /801
													Class-C Amp. (Telephony)	500	−200	60	15	4.5	22	
T20* [6]	20	7.5	1.75	750	85	25	20	4.9	5.1	0.7	4-pin M.	T-4BB	Class-C Amp. (Telegraphy)	750	— 85	85	18	3.6	44	T20
													Class-C Amp. Plate-Mod.	750	−140	70	15	3.6	38	

TABLE XIV — TRIODE TRANSMITTING TUBES — *Continued*

Type	Max. Plate Dissipation Watts	Cathode		Max. Plate Voltage	Max. Plate Current Ma.	Max. D.C. Grid Current Ma.	Amp. Factor	Interelectrode Capacitances ($\mu\mu$fd.)			Base [2]	Socket Connections [1]	Typical Operation	Plate Voltage	Grid Voltage	Plate Current Ma.	D.C. Grid Current Ma.	Approx. Grid Driving Power Watts [5]	Approx. Carrier Output Power Watts	Type
		Volts	Amps.					Grid to Fil.	Grid to Plate	Plate to Fil.										
TZ20 * [6]	20	7.5	1.75	750	85	30	62	5.3	5.0	0.6	4-pin M.	T-4BB	Class-C Amp. (Telegraphy)	750	− 40	85	28	3.75	44	TZ20
													Class-C Amp. Plate-Mod.	750	−100	70	23	4.8	38	
RK11 * [4]	25	6.3	3.0	750	105	35	20	7.0	7.0	0.9	4-pin M.	T-4BB	Class-C Amp. (Telegraphy)	750	−120	105	21	3.2	55	RK11
													Class-C Amp. Plate-Mod.	600	−120	85	24	3.7	38	
RK12 *	25	6.3	3.0	750	105	40	100	7.0	7.0	0.9	4-pin M.	T-4BB	Class-C Amp. (Telegraphy)	750	−100	105	35	5.2	55	RK12
													Class-C Amp. Plate-Mod.	600	−100	85	27	3.8	38	
HK24 *	25	6.3	3.0	2000	75	30	25	2.5	1.7	0.4	4-pin S.	T-4BB	Class-C Amp. (Telegraphy)	2000	−140	56	18	4.0	90	HK24
													Class-C Amp. Plate-Mod.	1500	−145	50	25	5.5	60	
HY25 *	25	7.5	2.25	800	75	25	55	4.2	4.6	1.0	4-pin M.	T-4BB	Class-C Amp. (Telegraphy)	750	− 45	75	15	2.0	42	HY25
													Class-C Amp. Plate-Mod.	700	− 45	75	17	5.0	39	
Twin 30 * [5 7]	30	6.0	4.0	1500	85	25	32	1.9	2.0	0.3	4-pin M.	T-4DB	Class-C Amp. (Telegraphy)	1500	−100	150 [8]	40 [8]	15	225	Twin 30
													Class-C Amp. Plate-Mod.	1250	−100	135 [8]	40 [8]	15	125	
HY30Z *	30	6.3	2.25	850	90	25	87	6.0	4.85	1.0	4-pin M.	T-4BE	Class-C Amp.-Oscillator	850	− 75	90	25	2.5	58	HY30Z
													Class-C Amp. Plate-Mod.	700	− 75	90	25	3.5	47	
HY31Z * [7] HY1231Z * [5 7]	30	6.3 12.6	3.5 1.7	500	150	30	45	5.0	5.5	1.9	5-pin M.	T-4D	Class-C Amp. (Telegraphy)	500	− 45	150	25	2.5	56	HY31Z HY1231Z
													Class-C Amp. (Telephony)	400	−100	150	30	3.5	45	
316A ****	30	2.0	3.65	450	80	12	6.5	1.2	1.6	0.8	None [9]	——	Class-C Amp. (Telegraphy)	450	——	80	12	——	7.5	316A
													Class-C Amp. Plate-Mod.	400	——	80	12	——	6.5	
809 * [6]	30	6.3	2.5	1000	125	——	50	5.7	6.7	0.9	4-pin M.	T-4BB	Class-C Amp. (Telegraphy)	1000	− 75	100	25	3.8	75	809
													Class-C Amp. Plate-Mod.	750	− 60	100	32	4.3	55	
1623 * [6]	30	6.3	2.5	1000	100	25	20	5.7	6.7	0.9	4-pin M.	T-4BB	Class-C Amp.-Oscillator	1000	− 90	100	20	3.1	75	1623
													Class-C Amp. Plate-Mod.	750	−125	100	20	4.0	55	
RK30 * [4]	35	7.5	3.25	1250	80	25	15	2.75	2.5	2.75	4-pin M.	T-4BC	Class-C Amp. (Telegraphy)	1250	−180	90	18	5.2	85	RK30
													Class-C Amp. Plate-Mod.	1000	−200	80	15	4.5	60	
800 *	35	7.5	3.25	1250	80	25	15	2.75	2.5	2.75	4-pin M.	T-4BC	Class-C Amp. (Telegraphy)	1250	−175	70	15	4.0	65	800
													Class-C Amp. Plate-Mod.	1000	−200	70	15	4.0	50	
1628 ****	40	3.5	3.25	1000	60	15	23	2.0	2.0	0.4	None [9]	——	Class-C Amp.-Oscillator	1000	− 65	50	15	1.7	35	1628
													Class-C Amp. Plate-Mod.	800	−100	40	11	1.6	22	
													Grid-Modulated Amp.	1000	−120	50	3.5	5.0	20	
8012 ****	40 [14]	6.3	2.0	1000	80	20	18	2.7	2.8	0.35	None [9]	——	Class-C Amp.-Oscillator	1000	− 90	50	14	1.6	35	8012
													Class-C Amp. Plate-Mod.	800	−105	40	10.5	1.4	22	
													Grid-Modulated Amp.	1000	−135	50	4.0	3.5	20	
RK18 * [4]	40	7.5	3.0	1250	100	40	18	6.0	4.8	1.8	4-pin M.	T-4BB	Class-C Amp. (Telegraphy)	1250	−160	100	12	2.8	95	RK18
													Class-C Amp. Plate-Mod.	1000	−160	80	13	3.1	64	
RK31	40	7.5	3.0	1250	100	35	170	7.0	1.0	2.0	4-pin M.	T-4BB	Class-C Amp. (Telegraphy)	1250	− 80	100	30	3.0	90	RK31
													Class-C Amp. Plate-Mod.	1000	− 80	100	28	3.5	70	
HY40 *	40	7.5	2.25	1000	125	25	25	5.8	5.6	0.9	4-pin M.	T-4BB	Class-C Amp. (Telegraphy)	1000	− 90	125	20	5.0	94	HY40
													Class-C Amp. Plate-Mod.	850	− 90	125	15	3.5	82	
													Grid-Modulated Amp.	1000	——	125	——	——	20 [12]	

TABLE XIV — TRIODE TRANSMITTING TUBES — *Continued*

Type	Max. Plate Dissipation Watts	Cathode		Max. Plate Voltage	Max. Plate Current Ma.	Max. D.C. Grid Current Ma.	Amp. Factor	Interelectrode Capacitances ($\mu\mu$fd.)			Base [2]	Socket Connections [1]	Typical Operation	Plate Voltage	Grid Voltage	Plate Current Ma.	D.C. Grid Current Ma.	Approx. Grid Driving Power Watts [5]	Approx. Carrier Output Power Watts	Type
		Volts	Amps.					Grid to Fil.	Grid to Plate	Plate to Fil.										
HY40Z *	40	7.5	2.5	1000	125	30	80	6.2	6.3	1.1	4-pin M.	T-4BB	Class-C Amp. (Telegraphy)	1000	−27.5	125	25	5.0	94	HY40Z
													Class-C Amp. Plate-Mod.	850	− 30	125	30	7.0	82	
													Grid-Modulated Amp.	1000	——	60	——	——	20 [12]	
T40 * [6]	40	7.5	2.5	1500	150	40	25	4.5	4.8	0.8	4-pin M.	T-4BB	Class-C Amp.-Oscillator	1500	−140	150	28	9.0	158	T40
													Class-C Amp. Plate-Mod.	1250	−115	115	20	5.25	104	
TZ40 * [6]	40	7.5	2.5	1500	150	45	62	4.8	5.0	0.8	4-pin M.	T-4BB	Class-C Amp.-Oscillator	1500	− 90	150	38	10	165	TZ40
													Class-C Amp. Plate-Mod.	1250	−100	125	30	7.5	116	
HY57 *	40	6.3	2.25	850	110	25	50	4.9	5.1	1.7	4-pin M.	T-4BB	Class-C Amp. (Telegraphy)	850	− 48	110	15	2.5	70	HY57
													Class-C Amp. Plate-Mod.	700	− 45	90	17	5.0	47	
													Grid-Modulated Amp.	850	——	70	——	——	20 [12]	
756 [4]	40	7.5	2.0	850	110	25	8.0	3.0	7.0	2.7	4-pin M.	T-4B	Class-C Amplifier	850	——	110	25	——	——	756
825 [4]	40	7.5	2.0	850	110	20	20	3.5	8.0	2.7	4-pin M.	T-4B	Class-C Amplifier	850	——	110	20	——	——	825
830 [4]	40	10	2.15	750	110	18	8.0	4.9	9.9	2.2	4-pin M.	T-4B	Class-C Amplifier	750	−180	110	18	7.0	55	830
													Grid-Modulated Amp.	1000	−200	50	2.0	3.0	15	
8010-R ****	50	6.3	2.4	1350	150	20	30	2.3	1.5	0.07	Special	——	Class-C Amplifier	——	——	——	——	——	——	8010-R
RK32 ** [4]	50	7.5	3.25	1250	100	25	11	2.5	3.4	0.7	4-pin M.	T-4BC	Class-C Amp. (Telegraphy)	1250	−225	100	14	4.8	90	RK32
													Class-C Amp. Plate-Mod.	1000	−310	100	21	8.7	70	
RK35 * [4]	50	7.5	4.0	1500	125	20	9.0	3.5	2.7	0.4	4-pin M.	T-4BC	Class-C Amp. (Telegraphy)	1500	−250	115	15	5.0	120	RK35
													Class-C Amp. Plate-Mod.	1250	−250	100	14	4.6	93	
													Grid-Modulated Amp.	1500	−180	37	——	2.0	25	
RK37 *	50	7.5	4.0	1500	125	35	28	3.5	3.2	0.2	4-pin M.	T-4BC	Class-C Amp. (Telegraphy)	1500	−130	115	30	7.0	122	RK37
													Class-C Amp. Plate-Mod.	1250	−150	100	23	5.6	90	
													Grid-Modulated Amp.	1500	− 50	50	——	2.4	26	
UH50 *	50	7.5	3.25	1250	125	25	10.6	2.2	2.6	0.3	4-pin M.	T-4BC	Class-C Amp. (Telegraphy)	1250	−225	125	20	7.5	115	UH50
													Class-C Amp. Plate-Mod.	1250	−325	125	20	10	115	
													Grid-Modulated Amp.	1250	−200	60	2.0	3.0	25	
UH51 *	50	5.0	6.5	2000	175	25	10.6	2.2	2.3	0.3	4-pin M.	T-4BC	Class-C Amp. (Telegraphy)	2000	−500	150	20	15	225	UH51
													Class-C Amp. Plate-Mod.	1500	−400	165	20	15	200	
													Grid-Modulated Amp.	1500	−400	85	2.0	8.0	65	
HK54 *	50	5.0	5.0	3000	150	30	27	1.9	1.9	0.2	4-pin M.	T-4BC	Class-C Amp. (Telegraphy)	3000	−290	100	25	10	250	HK54
													Class-C Amp. Plate-Mod.	2500	−250	100	20	8.0	210	
													Grid-Modulated Amp.	2000	−150	39	1.5	3.0	28	
HK154 [4]	50	5.0	6.5	1500	175	30	6.7	4.3	5.9	1.1	4-pin M.	T-4BC	Class-C Amp. (Telegraphy)	1500	−590	167	20	15	200	HK154
													Class-C Amp. Plate-Mod.	1250	−460	170	20	12	162	
													Grid-Modulated Amp.	1500	−450	52	——	5.0	28	
HK158 *	50	12.6	2.5	2000	200	40	25	4.7	4.6	1.0	4-pin M.	T-4BC	Class-C Amp.-Oscillator	2000	−150	125	25	6.0	200	HK158
													Class-C Amp. Plate-Mod.	2000	−140	105	25	5.0	170	
304A * [4] 304B *	50	7.5	3.25	1250	100	25	11	2.0	2.5	0.7	4-pin M.	T-4BC	Class-C Amp. (Telegraphy)	1250	−200	100	——	——	85	304A 304B
													Class-C Amp. Plate-Mod.	1000	−180	100	——	——	65	
356A *	50	5.0	5.0	1500	120	35	50	2.25	2.75	1.0	Special	T-4BD	Class-C Amp. (Telegraphy)	1500	− 60	100	——	——	100	356A
													Class-C Amp. Plate-Mod.	1250	−100	100	35	——	85	

TABLE XIV — TRIODE TRANSMITTING TUBES — *Continued*

Type	Max. Plate Dissipation Watts	Cathode		Max. Plate Voltage	Max. Plate Current Ma.	Max. D.C. Grid Current Ma.	Amp. Factor	Interelectrode Capacitances ($\mu\mu$fd.)			Base [2]	Socket Connections [1]	Typical Operation	Plate Voltage	Grid Voltage	Plate Current Ma.	D.C. Grid Current Ma.	Approx. Grid Driving Power Watts [5]	Approx. Carrier Output Power Watts	Type
		Volts	Amps.					Grid to Fil.	Grid to Plate	Plate to Fil.										
808	50	7.5	4.0	1500	150	35	47	5.3	2.8	0.15	4-pin M.	T-4BC	Class-C Amp. (Telegraphy)	1500	−200	125	30	9.5	140	808
													Class-C Amp. Plate-Mod.	1250	−225	100	32	10.5	105	
834 *	50	7.5	3.1	1250	100	20	10.5	2.2	2.6	0.6	4-pin M.	T-4BC	Class-C Amp. (Telegraphy)	1250	−225	90	15	4.5	75	834
													Class-C Amp. Plate-Mod.	1000	−310	90	17.5	6.5	58	
841A [4]	50	10	2.0	1250	150	30	14.6	3.5	9.0	2.5	4-pin M.	T-4BB	Class-C Amplifier	—	—	—	—	—	85	841A
841SW	50	10	2.0	1000	150	30	14.6	—	9.0	—	4-pin M.	T-4BB	Class-C Amplifier	—	—	—	—	—	—	841SW
T55 **	55	7.5	3.0	1500	150	40	20	5.0	3.9	1.2	4-pin M.	T-4BB	Class-C Amp. (Telegraphy)	1500	−170	150	18	6.0	170	T55
													Class-C Amp. Plate-Mod.	1500	−195	125	15	5.0	145	
811 * [6]	55	6.3	4.0	1500	150	50	160	5.5	5.5	0.6	4-pin M.	T-4BB	Class-C Amp. (Telegraphy)	1500	−113	150	35	8.0	170	811
													Class-C Amp. Plate-Mod.	1250	−125	125	50	11	120	
812 * [6]	55	6.3	4.5	1500	150	35	29	5.3	5.3	0.8	4-pin M.	T-4BB	Class-C Amp. (Telegraphy)	1500	−175	150	25	6.5	170	812
													Class-C Amp. Plate-Mod.	1250	−125	125	25	6.0	120	
RK51 *	60	7.5	3.75	1500	150	40	20	6.0	6.0	2.5	4-pin M.	T-4BB	Class-C Amp. (Telegraphy)	1500	−250	150	31	10	170	RK51
													Class-C Amp. Plate-Mod.	1250	−200	105	17	4.5	96	
													Grid-Modulated Amp.	1500	−130	60	0.4	2.3	128	
RK52 *	60	7.5	3.75	1500	130	50	170	6.6	12	2.2	4-pin M.	T-4BB	Class-C Amp. (Telegraphy)	1500	−120	130	40	7.0	135	RK52
													Class-C Amp. Plate-Mod.	1250	−120	115	47	8.5	102	
HF60	60	10	2.5	1600	150	—	20	—	5.2	—	4-pin M.	T-4BC	Class-C Amp.-Oscillator	1600	−150	—	—	—	100	HF60
826***	60	7.5	4.0	1000	125	40	31	3.7	2.9	1.4	Special	T-9A	Class-C Amp.-Oscillator	1000	− 70	125	35	5.8	86	826
													Class-C Amp. Plate-Mod.	800	− 98	94	35	6.2	53	
													Class-B Amp. (Telephony)	1000	− 50	65	8.5	3.7	22	
													Grid-Modulated Amp.	1000	−125	65	9.5	8.2	25	
830B 930B	60	10	2.0	1000	150	30	25	5.0	11	1.8	4-pin M.	T-4BB	Class-C Amp.-Oscillator	1000	−110	140	30	7.0	90	830B 930B
													Class-C Amp. Plate-Mod.	800	−150	95	20	5.0	50	
													Class-B Amp. (Telephony)	1000	− 35	85	6.0	6.0	26	
HY51A * HY51B *	65	7.5 10	3.5 2.25	1000	175	25	25	6.5	7.0	0.8	4-pin M.	T-4BB	Class-C Amp. (Telegraphy)	1000	− 75	175	20	7.5	131	HY51A HY51B
													Class-C Amp. Plate-Mod.	1000	−67.5	150	15	7.5	104	
													Grid-Modulated Amp.	1000	—	100	—	—	33 [12]	
HY51Z *	65	7.5	3.5	1000	175	35	85	7.9	7.2	0.8	4-pin M.	T-4BE	Class-C Amp. (Telegraphy)	1000	−22.5	175	35	10	131	HY51Z
													Class-C Amp. Plate-Mod.	1000	− 30	150	35	10	104	
													Grid-Modulated Amp.	1000	—	100	—	—	33 [12]	
UH35 * [6]	70	5.0	4.0	1500	150	35	30	1.4	1.6	0.2	4-pin M.	T-4BB	Class-C Amp. (Telegraphy)	1500	−170	150	30	7.0	170	UH35
													Class-C Amp. Plate-Mod.	1500	−120	100	30	5.0	120	
35T * 35TG	70	5.0	4.0	2000	150	35	30	3.8 1.9	1.9	0.2	4-pin M.	T-4BB T-4BC	Class-C Amp. (Telegraphy)	1500	−120	150	30	7.0	170	35T 35TG
													Class-C Amp. Plate-Mod.	1500	−120	100	30	5.0	120	
													Grid-Modulated Amp.	2000	−400	60	3.0	3.0	50	
V70 V70B	70	10	2.5	1500	140	25	14	5.0	9.0	2.3	4-pin J. 4-pin M.	T-3AB T-4BB	Class-C Amp. (Telegraphy)	1500	−215	130	6.0	3.0	140	V70 V70B
													Class-C Amp. Plate-Mod.	1250	−250	130	6.0	3.0	120	
V70A V70C	70	10	2.5	1500	140	20	25	5.0	9.5	2.0	4-pin J. 4-pin M.	T-3AB T-4BB	Class-C Amp. (Telegraphy)	1000	−110	140	30	7.0	90	V70A V70C
													Class-C Amp. Plate-Mod.	800	−150	95	20	5.0	50	

TABLE XIV — TRIODE TRANSMITTING TUBES — *Continued*

Type	Max. Plate Dissipation Watts	Cathode		Max. Plate Voltage	Max. Plate Current Ma.	Max. D.C. Grid Current Ma.	Amp. Factor	Interelectrode Capacitances ($\mu\mu$fd.)			Base [2]	Socket Connections [1]	Typical Operation	Plate Voltage	Grid Voltage	Plate Current Ma.	D.C. Grid Current Ma.	Approx. Grid Driving Power Watts [5]	Approx. Carrier Output Power Watts	Type
		Volts	Amps.					Grid to Fil.	Grid to Plate	Plate to Fil.										
V70D	70	10	3.0	1500	165	40	20	4.5	4.5	1.75	4-pin M.	T-4BB	Class-C Amp. (Telegraphy)	1500	−200	130	20	6.0	140	V70D
													Class-C Amp. Plate-Mod.	1000	−140	165	30	7.0	120	
50T [4]	75	5.0	6.0	3000	100	30	12	2.0	2.0	0.4	4-pin M.	T-4BC	Class-C Amplifier	3000	−600	100	25	——	250	50T
75T *	75	5.0	6.5	3000	175	30	10.6	2.2	2.3	0.3	4-pin M.	T-4BC	Class-C Amp. (Telegraphy)	1500	−300	175	30	10	200	75T
													Class-C Amp. Plate-Mod.	1500	−300	175	30	10	200	
													Grid-Modulated Amp.	1500	−400	85	2.0	8.0	65	
HF75*	75	10	3.25	2000	120	——	12.5	——	2.0	——	4-pin M.	T-4BC	Class-C Osc.-Amp.	2000	——	120	——	——	150	HF75
TW75 *	75	7.5	4.15	2000	175	60	20	3.35	1.5	0.7	4-pin M.	T-4BC	Class-C Amp.-Oscillator	2000	−175	150	37	12.7	225	TW75
													Class-C Amp. Plate-Mod.	2000	−260	125	32	13.2	198	
HF100	75	10	2.0	1500	150	30	23	3.5	4.5	1.4	4-pin M.	T-4BC	Class-C Amp. (Telegraphy)	1500	−200	150	18	6.0	170	HF100
													Class-C Amp. Plate-Mod.	1250	−250	110	21	8.0	105	
													Grid-Modulated Amp.	1500	−280	72	1.5	6.0	42	
111H	75	10	2.25	1500	160	——	23	——	4.6	——	4-pin M.	T-4BC	Class-C Osc.-Amp.	1500	——	160	——	——	175	111H
ZB120	75	10	2.0	1250	160	40	90	5.3	5.2	3.2	4-pin J.	T-3AA	Class-C Amp. (Telegraphy)	1250	−135	160	23	5.5	145	ZB120
													Class-C Amp. Plate-Mod.	1000	−150	120	21	5.0	95	
													Grid-Modulated Amp.	1250	——	95	8.0	1.5	45	
242A	85	10	3.25	1250	150	50	12.5	6.5	13	4.0	4-pin J.	T-3AA	Class-C Amp. (Telegraphy)	1250	−175	150	——	——	130	242A
													Class-C Amp. Plate-Mod.	1000	−160	150	50	——	100	
284D	85	10	3.25	1250	150	100	4.8	6.0	8.3	5.6	4-pin J.	T-3AA	Class-C Amp. (Telegraphy)	1250	−500	150	——	——	125	284D
													Class-C Amp. Plate-Mod.	1000	−450	150	50	——	100	
8005 * [6]	85	10	3.25	1500	200	45	20	6.4	5.0	1.0	4-pin M.	T-4BB	Class-C Amp.-Oscillator	1500	−130	200	32	7.5	220	8005
													Class-C Amp. Plate-Mod.	1250	−195	190	28	9.0	170	
													Class-B Amp. (Telephony)	1500	− 80	83	1.0	5.0	45	
RK36 * [4]	100	5.0	8.0	3000	165	35	14	4.5	5.0	1.0	4-pin M.	T-4BC	Class-C Amp. (Telegraphy)	2000	−360	150	30	15	200	RK36
													Class-C Amp. (Telephony)	2000	−360	150	30	15	200	
													Grid-Modulated Amp.	2000	−270	72	1.0	3.5	42	
													Class-B Amp. (Telephony)	2000	−180	75	3.0	10	50	
RK38 * [4]	100	5.0	8.0	3000	165	40	——	4.6	4.3	0.9	4-pin M.	T-4BC	Class-C Amp. (Telegraphy)	2000	−200	160	30	10	225	RK38
													Class-C Amp. (Telephony)	2000	−200	160	30	10	225	
													Grid-Modulated Amp.	2000	−150	80	2.0	5.5	60	
													Class-B Amp. (Telephony)	2000	−100	75	2.0	7.0	55	
100TH	100	5.0	6.5	3000	225	50	30	2.2	2.0	0.3	4-pin M.	T-4BC	Class-C Amp. (Telegraphy)	3000	−210	167	40	18	400	100TH
													Class-C Amp. Plate-Mod.	3000	−210	167	45	18	400	
													Class-B Amp. (Telephony)	3000	− 70	50	2.0	5.0	50	
													Grid-Modulated Amp.	3000	−400	70	3.0	7.0	100	
100TL	100	5.0	6.5	3000	225	35	12	2.0	2.3	0.4	4-pin M.	T-4BC	Class-C Amp. (Telegraphy)	3000	−600	167	30	18	400	100TL
													Class-C Amp. Plate-Mod.	3000	−600	167	35	18	400	
													Class-B Amp. (Telephony)	3000	−280	50	1.0	5.0	50	
													Grid-Modulated Amp.	3000	−560	60	2.0	7.0	90	

TABLE XIV — TRIODE TRANSMITTING TUBES — *Continued*

Type	Max. Plate Dissipation Watts	Cathode		Max. Plate Voltage	Max. Plate Current Ma.	Max. D.C. Grid Current Ma.	Amp. Factor	Interelectrode Capacitances ($\mu\mu$fd.)			Base [2]	Socket Connections [1]	Typical Operation	Plate Voltage	Grid Voltage	Plate Current Ma.	D.C. Grid Current Ma.	Approx. Grid Driving Power Watts [5]	Approx. Carrier Output Power Watts	Type
		Volts	Amps.					Grid to Fil.	Grid to Plate	Plate to Fil.										
HK254	100	5.0	7.5	4000	200	40	25	3.3	3.4	1.1	4-pin J.	T-3AC	Class-C Amp. (Telegraphy)	4000	−380	120	35	20	475	
													Class-C Amp. Plate-Mod.	3000	−290	135	40	23	320	HK254
													Class-B Amp. (Telephony)	3000	−125	51	2.0	3.0	54	
													Grid-Modulated Amp.	3000	——	51	3.0	4.0	58	
RK58 [6]	100	10	3.25	1250	175	70	——	8.5	6.5	10.5	4-pin J.	T-3AB	Class-C Amp. (Telegraphy)	1250	− 90	150	30	6.0	130	
													Class-C Amp. Plate-Mod.	1000	−135	150	50	16	100	RK58
													Class-B Amp. (Telephony)	1250	——	106	15	6.0	42.5	
HF120	100	10	3.25	1250	175	——	12	——	10.5	——	4-pin J.	——	Class-C Amp.-Oscillator	1250	——	175	——	——	150	HF120
HF125	100	10	3.25	1500	175	——	25	——	11.5	——	4-pin J.	——	Class-C Amp.-Oscillator	1500	——	175	——	——	200	HF125
HF140	100	10	3.25	1250	175	——	12	——	12.5	——	4-pin J.	——	Class-C Amp.-Oscillator	1250	——	175	——	——	150	HF140
203A	100	10	3.25	1250	175	60	25	6.5	14.5	5.5	4-pin J.	T-3AA	Class-C Amp. (Telegraphy)	1250	−125	150	25	7.0	130	
303A													Class-C Amp. (Telephony)	1000	−135	150	50	14	100	203A 303A
													Class-B Amp. (Telephony)	1250	− 45	105	3.0	3.0	42.5	
203H	100	10	3.25	1500	175	60	25	6.5	11.5	1.5	4-pin J.	T-3AB	Class-C Amp. (Telegraphy)	1500	−200	170	12	3.8	200	
													Class-C Amp. (Telephony)	1250	−160	167	19	5.0	160	203H
													Class-B Amp. (Telephony)	1500	− 48	100	3.0	2.0	52	
211	100	10	3.25	1250	175	50	12	6.0	14.5	5.5	4-pin J.	T-3AA	Class-C Amp. (Telegraphy)	1250	−225	150	18	7.0	130	211
311								6.0	9.25	5.0			Class-C Amp. (Telegraphy)	1000	−260	150	35	14	100	311
835 [4]													Class-B Amp. (Telephony)	1250	−100	106	1.0	7.5	42.5	835
242B	100	10	3.25	1250	150	50	12.5	7.0	13.6	6.0	4-pin J.	T-3AA	Class-C Amp. (Telegraphy)	1250	−175	150	——	——	130	
342B													Class-C Amp. Plate-Mod.	1000	−160	150	50	——	100	242B 342B
													Class-B Amp. (Telephony)	1250	− 80	120	——	——	50	
242C	100	10	3.25	1250	150	50	12.5	6.1	13.0	4.7	4-pin J.	T-3AA	Class-C Amp. (Telegraphy)	1250	−175	150	——	——	130	
													Class-C Amp. Plate-Mod.	1000	−160	150	50	——	100	242C
													Class-B Amp. (Telephony)	1250	− 90	120	——	——	50	
261A	100	10	3.25	1250	150	50	12	6.5	9.0	4.0	4-pin J.	T-3AA	Class-C Amp. (Telegraphy)	1250	−175	125	——	——	100	
361A													Class-C Amp. Plate-Mod.	1000	−160	150	50	——	100	261A 361A
													Class-B Amp. (Telephony)	1250	−100	125	——	——	50	
276A	100	10	3.0	1250	125	50	12	6.0	9.0	4.0	4-pin J.	T-3AA	Class-C Amp. (Telegraphy)	1250	−175	125	——	——	100	
376A													Class-C Amp. Plate-Mod.	1000	−160	125	50	——	85	276A 376A
													Class-B Amp. (Telephony)	1250	−100	125	——	——	50	
284B	100	10	3.25	1250	150	100	5.0	4.2	7.4	5.3	4-pin J.	T-3AB	Class-C Amp. (Telegraphy)	1250	−500	150	——	——	125	
													Class-C Amp. Plate-Mod.	1000	−430	150	50	——	100	284B
													Class-B Amp. (Telephony)	1250	−270	120	——	——	50	
295A	100	10	3.25	1250	175	50	25	6.5	14.5	5.5	4-pin J.	T-3AA	Class-C Amp. (Telegraphy)	1250	−125	150	——	——	125	
													Class-C Amp. Plate-Mod.	1000	−125	150	50	——	100	295A
													Class-B Amp. (Telephony)	1250	− 75	105	——	——	42.5	
838	100	10	3.25	1250	175	70	——	6.5	8.0	5.0	4-pin J.	T-3AA	Class-C Amp. (Telegraphy)	1250	− 90	150	30	6.0	130	
938													Class-C Amp. (Telephony)	1000	−135	150	60	16	100	838 938
													Class-B Amp. (Telephony)	1250	0	106	15	6.0	42.5	

TABLE XIV — TRIODE TRANSMITTING TUBES — *Continued*

Type	Max. Plate Dissipation Watts	Cathode		Max. Plate Voltage	Max. Plate Current Ma.	Max. D.C. Grid Current Ma.	Amp. Factor	Interelectrode Capacitances ($\mu\mu$fd.)			Base [2]	Socket Connections [1]
		Volts	Amps.					Grid to Fil.	Grid to Plate	Plate to Fil.		
852	100	10	3.25	3000	150	40	12	1.9	2.6	1.0	4-pin M.	T-4BC
8003	100	10	3.25	1500	250	50	12	5.8	11.7	3.4	4-pin J.	T-3AB
RK57/ /805	125	10	3.25	1500	210	70	——	6.5	8.0	5.0	4-pin J.	T-3AB
T125 *	125	10	4.5	2500	250	60	25	6.3	6.0	1.3	4-pin J.	T-3AC
HF130	125	10	3.25	1250	210	——	12.5	——	9.0	——	4-pin J.	——
HF150	125	10	3.25	1500	210	——	12.5	——	7.2	——	4-pin J.	——
HF175	125	10	4.0	2000	250	——	18	——	6.3	——	4-pin J.	——
GL146	125	10	3.25	1500	200	60	78	7.2	9.2	3.9	4-pin GL	T-4BG
GL152	125	10	3.25	1500	200	60	25	7.0	8.8	4.0	4-pin GL	T-4BG
805 905	125	10	3.25	1500	210	70	40/60	8.5	6.5	10.5	4-pin J.	T-3AB
150T	150	5.0	10	3000	200	50	13	3.0	3.5	0.5	4-pin J.	T-3AC
TW150	150	10	4.1	3000	200	60	35	3.9	2.0	0.8	4-pin J.	T-3AC
152TL ** [6] HK252-L** [6]	150	5/10 [13]	13/6.5	3000	500	75	10	7.0	5.0	0.4	Special	T-4BF
HF200 HV18	150	10–11	3.4	2500	200	50	18	5.2	5.8	1.2	4-pin J.	T-3AC
HD203A	150	10	4.0	2000	250	60	25	——	12	——	4-pin J.	T-3AB
HF250	150	10.5	4.0	2500	200	——	18	——	5.8	——	4-pin J.	T-3AC
HK354 HK354C	150	5.0	10	4000	300	50	14	4.5	3.8	1.1	4-pin J.	T-3AC
HK354D	150	5.0	10	4000	300	55	22	4.5	3.8	1.1	4-pin J.	T-3AC

Type	Typical Operation	Plate Voltage	Grid Voltage	Plate Current Ma.	D.C. Grid Current Ma.	Approx. Grid Driving Power Watts [5]	Approx. Carrier Output Power Watts
852	Class-C Amp. (Telegraphy)	3000	−600	85	15	12	165
	Class-C Amp. (Telephony)	2000	−500	67	30	23	75
	Class-B Amp. (Telephony)	3000	−250	43	0	7.0	40
8003	Class-C Amp.-Oscillator	1350	−180	245	35	11	250
	Class-C Amp. Plate-Mod.	1100	−260	200	40	15	167
	Class-B Amp. (Telephony)	1350	−110	110	1.5	8	50
RK57/ /805	Class-C Amp. (Telegraphy)	1500	−105	200	40	8.5	215
	Class-C Amp. (Telephony)	1250	−160	160	60	16	140
	Class-B Amp. (Telephony)	1500	− 10	115	15	7.5	57.5
T125	Class-C Amp. (Telegraphy)	2500	−200	240	31	11	475
	Class-C Amp. Plate-Mod.	2000	−215	200	28	10	320
HF130	Class-C Amp.-Oscillator	1250	−210	——	——	——	170
HF150	Class-C Amp.-Oscillator	1500	——	210	——	——	200
HF175	Class-C Amp.-Oscillator	2000	——	250	——	——	300
GL146	Class-C Amp.-Oscillator	1250	−150	180	30	——	150
	Class-C Amp. Plate-Mod.	1000	−200	160	40	——	100
	Class-B Amp. (Telephony)	1250	0	132	——	——	55
GL152	Class-C Amp.-Oscillator	1250	−150	180	30	——	150
	Class-C Amp. Plate-Mod.	1000	−200	160	30	——	100
	Class-B Amp. (Telephony)	1250	− 40	132	——	——	55
805 905	Class-C Amp. (Telegraphy)	1500	−105	200	40	8.5	215
	Class-C Amp. Plate-Mod.	1250	−160	160	60	16	140
	Class-B Amp. (Telephony)	1500	− 10	115	15	7.5	57.5
150T	Class-C Amp. (Telegraphy)	3000	−600	200	35	——	450
TW150	Class-C Amp.-Oscillator	3000	−170	200	45	17	470
	Class-C Amp. Plate-Mod.	3000	−260	165	40	17	400
152TL HK252-L	Class-C Amp.-Oscillator	3000	−400	250	30	15	610
	Class-C Amp. Plate-Mod.	2500	−350	250	35	16	500
HF200 HV18	Class-C Amp. (Telegraphy)	2500	−300	200	18	8.0	380
	Class-C Amp. Plate-Mod.	2000	−350	160	20	9.0	250
	Class-B Amp. (Telephony)	2500	−140	90	——	4.0	80
HD203A	Class-C Amplifier	——	——	——	——	——	375
HF250	Class-C Amp.-Oscillator	2500	——	200	——	——	375
HK354	Class-C Amp. (Telegraphy)	4000	−690	245	50	48	830
	Class-C Amp. Plate-Mod.	3000	−550	210	50	35	525
HK354C	Class-B Amp. (Telephony)	3000	−205	78	2.0	10	82
	Grid-Modulated Amp.	3000	−400	78	3.0	12	85
HK354D	Class-C Amp. (Telegraphy)	3500	−490	240	50	38	690
	Class-C Amp. Plate-Mod.	3500	−425	210	55	36	525

TABLE XIV — TRIODE TRANSMITTING TUBES — *Continued*

Type	Max. Plate Dissipation Watts	Cathode		Max. Plate Voltage	Max. Plate Current Ma.	Max. D.C. Grid Current Ma.	Amp. Factor	Interelectrode Capacitances ($\mu\mu$fd.)			Base [2]	Socket Connections [1]	Typical Operation	Plate Voltage	Grid Voltage	Plate Current Ma.	D.C. Grid Current Ma.	Approx. Grid Driving Power Watts [5]	Approx. Carrier Output Power Watts	Type
		Volts	Amps.					Grid to Fil.	Grid to Plate	Plate to Fil.										
HK354E	150	5.0	10	4000	300	60	35	4.5	3.8	1.1	4-pin J.	T-3AC	Class-C Amp. (Telegraphy)	3500	−448	240	60	45	690	HK354E
													Class-C Amp. Plate-Mod.	3000	−437	210	60	45	525	
HK354F	150	5.0	10	4000	300	75	50	4.5	3.8	1.1	4-pin J.	T-3AC	Class-C Amp. (Telegraphy)	3500	−368	250	75	50	720	HK354F
													Class-C Amp. Plate-Mod.	3000	−312	210	75	45	525	
810 [6] 1627	150	10 5.0	4.5 9.0	2250	275	70	36	8.7	4.8	12	4-pin J.	T-3AC	Class-C Amp. (Telegraphy)	2250	−160	275	40	12	475	810 1627
													Class-C Amp. Plate-Mod.	1800	−200	250	50	17	335	
													Class-B Amp. (Telephony)	2250	− 70	100	2.0	4.0	75	
													Grid-Modulated Amp.	2250	−140	100	2.0	4.0	75	
8000 [6]	150	10	4.5	2250	275	40	16.5	5.0	6.4	3.3	4-pin J.	T-3AC	Class-C Amp.-Oscillator	2250	−210	275	25	9.0	475	8000
													Class-C Amp. Plate-Mod.	1800	−320	250	20	8.8	335	
													Class-B Amp. (Telephony)	2250	−145	100	0	5.4	75	
													Grid-Modulated Amp.	2250	−265	100	0	2.5	75	
RK63 RK63A	200	5.0 6.3	10 14	3000	250	60	37	2.7	3.3	1.1	4-pin J.	T-3AC	Class-C Amp. (Telegraphy)	3000	−200	233	45	17	525	RK63 RK63A
													Class-C Amp. Plate-Mod.	2500	−200	205	50	19	405	
													Class-B Amp. (Telephony)	3000	−150	100	1.0	12	100	
													Grid-Modulated Amp.	3000	−250	100	7.0	12.5	100	
T200	200	10	5.75	2500	350	80	16	9.5	7.9	1.6	4-pin J.	T-3AC	Class-C Amp. (Telegraphy)	2500	−280	350	54	25	685	T200
													Class-C Amp. Plate-Mod.	2000	−260	300	54	23	460	
HF300	200	11–12	4.0	3000	275	60	23	6.0	6.5	1.4	4-pin J.	T-3AC	Class-C Amp. (Telegraphy)	3000	−400	250	28	16	600	HF300
													Class-C Amp. Plate-Mod.	2000	−300	250	36	17	385	
													Class-B Amp. (Telephony)	2500	−100	120	0.5	6.0	105	
T814 HV12	200	10	4.0	2500	200	60	12	8.5	12.8	1.7	4-pin J.	T-3AB	Class-C Amp. (Telegraphy)	2500	−240	300	30	10	575	T814 HV12
													Class-C Amp. Plate-Mod.	2000	−370	300	40	20	485	
T822 HV27	200	10	4.0	2500	300	60	27	8.5	13.5	2.1	4-pin J.	T-3AB	Class-C Amp. (Telegraphy)	2500	−175	300	50	15	585	T822 HV27
													Class-C Amp. Plate-Mod.	2000	−195	250	45	15	400	
													Class-B Amp. (Telephony)	2500	− 95	125	5.0	8.0	110	
806 [6]	225	5.0	10	3300	300	50	12.6	6.1	4.2	1.1	4-pin J.	T-3AC	Class-C Amp. (Telegraphy)	3300	−600	300	40	34	780	806
													Class-C Amp. Plate-Mod.	3000	−670	195	27	24	460	
													Class-B Amp. (Telephony)	3300	−280	102	——	10.3	115	
250TH*	250	5.0	10.5	3000	350	100	32	3.5	3.3	0.3	4-pin J.	T-3AC	Class-C Amp. (Telegraphy)	3000	−210	330	75	42	750	250TH
													Class-C Amp. Plate-Mod.	3000	−210	330	75	42	750	
													Class-B Amp. (Telephony)	3000	− 80	125	4.0	15	125	
													Grid-Modulated Amp.	3000	−160	125	4.0	20	125	
250TL*	250	5.0	10.5	3000	350	50	13	3.0	3.5	0.5	4-pin J.	T-3AC	Class-C Amp. (Telegraphy)	3000	−600	330	45	42	750	250TL
													Class-C Amp. Plate-Mod.	3000	−600	330	45	42	750	
													Class-B Amp. (Telephony)	3000	−225	125	2.0	15	125	
													Grid-Modulated Amp.	3000	−450	125	2.0	15	125	
GL159	250	10	9.6	2000	400	100	20	11	17.6	5.0	4-pin GL	T-4BG	Class-C Amp.-Oscillator	2000	−200	400	17	6.0	620	GL159
													Class-C Amp. Plate-Mod.	1500	−240	400	23	9.0	450	
													Class-B Amp. (Telephony)	2000	− 90	190	——	2.5	130	

TABLE XIV — TRIODE TRANSMITTING TUBES — *Continued*

Type	Max. Plate Dissipation Watts	Cathode		Max. Plate Voltage	Max. Plate Current Ma.	Max. D.C. Grid Current Ma.	Amp. Factor	Interelectrode Capacitances ($\mu\mu$fd.)			Base [2]	Socket Connections [1]	Typical Operation	Plate Voltage	Grid Voltage	Plate Current Ma.	D.C. Grid Current Ma.	Approx. Grid Driving Power Watts [5]	Approx. Carrier Output Power Watts	Type
		Volts	Amps.					Grid to Fil.	Grid to Plate	Plate to Fil.										
GL169	250	10	9.6	2000	400	100	85	11.5	19	4.7	4-pin GL	T-4BG	Class-C Amp.-Oscillator	2000	−100	400	42	10	620	GL169
													Class-C Amp. Plate-Mod.	1500	−100	400	45	10	450	
													Class-B Amp. (Telephony)	2000	− 10	190	——	3.5	130	
204A 304A	250	11	3.85	2500	275	80	23	12.5	15	2.3	Special	T-1A	Class-C Amp. (Telegraphy)	2500	−200	250	30	15	450	204A 304A
													Class-C Amp. Plate-Mod.	2000	−250	250	35	20	350	
													Class-B Amp. (Telephony)	2500	− 70	160	——	15	100	
308B	250	14	4.0	2250	325	75	8.0	13.6	17.4	9.3	4-pin W.E.	T-2A	Class-C Amp. (Telegraphy)	1750	−400	300	——	——	350	308B
													Class-C Amp. Plate-Mod.	1250	−320	300	75	——	250	
													Class-B Amp. (Telephony)	1750	−230	215	——	——	125	
HK454H *[6]	250	5.0	11	5000	375	85	30	4.6	3.4	1.4	4-pin J.	T-3AC	Class-C Amplifier	3500	−275	270	60	28	760	HK454H
HK454-L *[6]	250	5.0	11	5000	375	60	12	4.6	3.4	1.4	4-pin J.	T-3AC	Class-C Amplifier	3500	−450	270	45	30	760	HK454-L
212E 241B 312E	275	14	4.0	3000	350	75	16	14.9	18.8	8.6	4-pin W.E. 3-pin W.E.	T-2A T-2AA	Class-C Amp. (Telegraphy)	2000	−225	300	——	——	400	212E 241B 312E
													Class-C Amp. Plate-Mod.	1500	−200	300	75	——	300	
													Class-B Amp. (Telephony)	2000	−120	300	——	——	200	
300T [4]	300	8.0	11.5	3500	350	75	16	4.0	4.0	0.6	4-pin J.	T-3AC	Class-C Amplifier	3500	−600	300	60	——	800	300T
304TL [6] HK304-L *[6]	300	5/10 [13]	26/13	3000	1000	150	10	12	9.0	0.8	Special	T-4BF	Class-C Amplifier	2000	−300	500	——	——	800	304TL HK304-L
HK654	300	7.5	15	4000	600	100	22	6.2	5.5	1.5	4-pin J.	T-3AC	Class-C Amp. (Telegraphy)	2000	−380	500	75	57	720	HK654
													Class-C Amp. Plate-Mod.	2000	−365	450	110	70	655	
													Class-B Amp. (Telephony)	3500	−137	150	13	13	210	
													Grid-Modulated Amp.	3500	−210	150	15	15	210	
833A	300	10	10	3000	500	100	35	12.3	6.3	8.5	Special	T-1AB	Class-C Amp. (Telegraphy)	2000	−200	475	65	25	740	833A
													Class-C Amp. (Telephony)	2500	−300	335	75	30	635	
													Class-B Amp. (Telephony)	3000	− 70	150	2.0	10	150	
270A	350	10	4.0	3000	375	75	16	18	21	2.0	Special	T-1A	Class-C Amp. (Telegraphy)	3000	−375	350	——	——	700	270A
													Class-C Amp. Plate-Mod.	2250	−300	300	80	——	450	
													Class-B Amp. (Telephony)	3000	−180	175	——	——	175	
849	400	11	5.0	2500	350	125	19	17	33.5	3.0	Special	T-1A	Class-C Amp. (Telegraphy)	2500	−250	300	20	8.0	560	849
													Class-C Amp. (Telephony)	2000	−300	300	30	14	425	
													Class-B Amp. (Telephony)	2500	−125	216	1.0	12	180	
831 [4]	400	11	10	3500	350	75	14.5	3.8	4.0	1.4	Special	T-1AA	Class-C Amp. (Telegraphy)	3500	−400	275	40	30	590	831
													Class-C Amp. (Telephony)	3000	−500	200	60	50	360	
													Class-B Amp. (Telephony)	3500	−220	146	——	——	160	

[1] S. — small; M. — medium; J. — jumbo; O. — octal.
[2] Refer to Transmitting Tube Diagrams.
[3] See Chapter Five for discussion of grid driving power.
[4] Obsolete type.
[5] Instant-heating filament for mobile use.
[6] Intermittent commercial and amateur service ratings.
[7] Twin triode. Values, except inter-element capacities, are for both sections, in push-pull.
[8] The 805 has a variable high-μ grid.
[9] All wire leads. Ratings at 500 Mc.
[10] Gaseous discharge tube for use on 110-volt d.c.
[11] Output at 112 Mc.
[12] Calculated at 33% efficiency for 100% modulation.
[13] Multiple-unit tube with dual filaments which can be connected in series or parallel.
[14] Forced-air cooling is recommended at ratings above 75 per cent of maximum.
[15] See Receiving Tube Base Diagrams.
[16] Input resonant frequency approximately 335 Mc.

Frequency limits:
* May be used at full ratings on 56–60 Mc. band and lower.
** May be used at full ratings on 112-Mc. band and lower.
*** May be used at full ratings on 224-Mc. band and lower.
**** May be used at full rating above 300 Mc.

TABLE XV—TETRODE AND PENTODE TRANSMITTING TUBES

Type	Max. Plate Dissipation Watts	Cathode Volts	Cathode Amps.	Max. Plate Voltage	Max. Screen Voltage	Max. Screen Dissipation Watts	Interelectrode Capacitances (μμfd.) Grid to Fil.	Grid to Plate	Plate to Fil.	Base [1]	Socket Connections [2]	Typical Operation	Plate Voltage	Screen Voltage	Suppressor Voltage	Grid Voltage	Plate Current Ma.	Screen Current Ma.	Grid Current Ma.	Screen [3] Resistor Ohms	Approx. Grid Driving Power Watts [4]	Approx. Carrier Output Power Watts	Type
3A4	2.0	1.4 2.8	0.2 0.1	150	135	0.9	4.8	0.2	4.2	7-pin B.	7BB [15]	Class-C Amp.-Oscillator	150	135	0	− 26	18.3	6.5	0.1 3	2300	——	1.2	3A4
HY63* [6]	3.0	2.5 1.25	0.1125 0.225	200	100	0.6	8.0	0.1	8.0	7-pin O.	T-8DB	Class-C Amp.-Osc.	200	100	——	− 22.5	20	4.0	2.0	——	0.1	3.0	HY63
												Class-C Amp. Plate-Mod.	180	100	——	− 35	15	3.0	2.0	——	0.2	2.0	
RK64* [5]	6.0	6.3	0.5	400	100	3.0	10	0.4	9.0	5-pin M.	T-5BB	Class-C Amp. (Telegraphy)	400	100	30	− 30	35	10	3.0	——	0.18	10	RK64
												Class-C Amp. Plate-Mod.	300	——	30	− 30	26	8.0	4.0	30000	0.2	6.0	
1610	6.0	2.5	1.75	400	200	2.0	8.6	1.2	13	5-pin M.	T-5CA	Class-C Amp.-Oscillator	400	150	——	− 50	22.5	7.0	1.5	——	0.1	5.0	1610
RK56*	8.0	6.3	0.55	300	300	4.5	10	0.2	9.0	5-pin M.	T-5BB	Class-C Amp. (Telegraphy)	400	300	——	− 40	62	12	1.6	——	0.1	12.5	RK56
												Class-C Amp. Plate-Mod.	250	200	——	− 40	50	10	1.6	2800	0.28	8.5	
RK23 RK25 RK25B [5]	10	2.5 6.3	2.0 0.9	500	250	8	10	0.2	10	7-pin M.	T-7C	Class-C Amp. (Telegraphy)	500	200	45	− 90	55	38	4.0	——	0.5	22	RK23 RK25 RK25B
												Class-C Amp. (Telephony)	400	150	0	− 90	43	30	6.0	8300	0.8	13.5	
												Suppressor-Modulated Amp.	500	200	−45	− 90	31	39	4.0	——	0.5	6.0	
1613	10	6.3	0.7	350	275	2.5	8.5	0.5	11.5	7-pin O.	T-8CB	Class-C Amp. (Telegraphy)	350	200	——	− 35	50	10	3.5	20000	0.22	9	1613
												Class-C Amp. Plate-Mod.	275	200	——	− 35	42	10	2.8	10000	0.16	6.0	
837 RK44 [5]	12	12.6	0.7	500	300	8	16	0.2 [11]	10	7-pin M.	T-7C	Class-C Amp. (Telegraphy)	500	200	40	− 75	60	15	4.0	20000	0.4	22	837 RK44
												Class-C Amp. (Telephony)	400	140	40	− 40	45	20	5.0	13000	0.3	11	
												Suppressor-Modulated Amp.	500	——	−65	− 20	30	23	3.5	14000	0.1	5.0	
802 [7]	13	6.3	0.9	600	250	6.0	12	0.15 [11]	8.5	7-pin M.	T-7C	Class-C Amp. (Telegraphy)	600	250	40	−120	55	16	2.4	22000	0.30	23	802
												Class-C Amp. Plate-Mod.	500	245	40	− 40	40	15	1.5	16300	0.10	12	
												Suppressor-Mod. Amp.	600	250	−45	−100	30	24	5.0	14500	0.6	6.3	
HY6V6-GTX*	15	6.3	0.5	300	225	2.5	10	0.4	8.5	7-pin O.	T-8D	Class-C Amp.-Osc.	300	200	——	− 45	60	7.5	2.5	——	0.25	12	HY6V6-GTX
												Class-C Amp. Plate-Mod.	250	200	——	− 45	60	6.0	2.0	15000	0.4	10	
HY60*	15	6.3	0.5	425	225	2.5	10	0.19	8.5	5-pin M.	T-5BB	Class-C Amp. (Telegraphy)	425	200	——	− 62.5	60	7.0	3.0	——	0.25	16	HY60
												Class-C Amp. Plate-Mod.	325	200	——	− 45	60	8.5	2.5	——	0.2	14	
HY65* [6]	15	6.3	0.85	450	250	2.5	8.4	0.11	8.2	7-pin O.	T-8DB	Class-C Amp.-Osc.	450	200	——	− 45	63	7.0	3.0	——	0.5	19	HY65
												Class-C Amp. Plate-Mod.	350	250	——	− 45	63	7.0	3.0	——	0.5	14	
306A	15	2.75	2.0	300	300	6.0	13	0.35	13	5-pin M.	T-5CB	Class-C Amp. (Telephony)	300	180	——	− 50	36	15	3.0	8000	——	7.0	306A
307A	15	5.5	1.0	500	250	6.0	15	0.55	12	5-pin M.	T-5C	Class-C Amp. (Telegraphy)	500	250	0	− 35	60	13	1.4	20000	——	20	307A
												Suppressor-Modulated Amp.	500	200	−50	− 35	40	20	1.5	14000	——	6.0	
832** [10]	15	6.3 12.6	1.6 0.8	500	250	5.0	7.5	0.05 [11]	3.8	Special	T-9B	Class-C Amp. (Telegraphy)	500	200	——	− 65	72	14	2.6	21000	0.18	26	832
												Class-C Amp. (Telephony)	425	200	——	− 60	52	16	2.4	14000	0.15	16	
832A** [10]	15	6.3 12.6	0.8 0.8	750	250	5.0	7.5	0.05 [11]	3.8	Special	T-9B	Class-C Amp. (Telegraphy)	750	200	——	− 65	48	15	2.8	36500	0.19	26	832A
												Class-C Amp. (Telephony)	600	200	——	− 65	36	16	2.6	25000	0.16	17	
844 [5]	15	2.5	2.5	500	180	3.0	9.5	0.15	7.5	5-pin M.	T-5BB	Class-C Amp. (Telegraphy)	500	175	——	−125	25	——	5.0	——	——	9.0	844
												Class-C Amp. (Telephony)	500	150	——	−100	20	——	——	——	——	4.0	
865	15	7.5	2.0	750	175	3.0	8.5	0.1 [11]	8.0	4-pin M.	T-4C	Class-C Amp. (Telegraphy)	750	125	——	− 80	40	——	5.5	——	1.0	16	865
												Class-C Amp. (Telephony)	500	125	——	−120	40	——	9.0	——	2.5	10	
1619	15	2.5	2.0	400	300	3.5	10.5	0.35	12.5	7-pin O.	T-8D	Class-C Amp. (Telegraphy)	400	300	——	− 55	75	10.5	5.0	9500	0.36	19.5	1619
												Class-C Amp. Plate-Mod.	325	285	——	− 50	62	7.5	2.8	5000	0.18	13	
254A	20	5.0	3.25	750	175	5.0	4.6	0.1	9.4	4-pin M.	T-4C	Class-C Amplifier	750	175	——	− 90	60	——	——	——	——	25	254A

TABLE XV — TETRODE AND PENTODE TRANSMITTING TUBES — *Continued*

Type	Max. Plate Dissipation Watts	Cathode Volts	Cathode Amps.	Max. Plate Voltage	Max. Screen Voltage	Max. Screen Dissipation Watts	Interelectrode Capacitances ($\mu\mu$fd.) Grid to Fil.	Grid to Plate	Plate to Fil.	Base [1]	Socket Connections [2]	Typical Operation	Plate Voltage	Screen Voltage	Suppressor Voltage	Grid Voltage	Plate Current Ma.	Screen Current Ma.	Grid Current Ma.	Screen [3] Resistor Ohms	Approx. Grid Driving Power Watts [4]	Approx. Carrier Output Power Watts	Type
6L6	21	6.3	0.9	375	300	3.5	13	0.5	12.5	7-pin O.	T-8D	Class-C Amp.-Oscillator	375	200	—	− 35	88	9.0	3.5	—	0.18	17	6L6
6L6GX	21	6.3	0.9	500	300	3.5	11	1.5	7.0	7-pin O.	T-8D	Class-C Amp. (Telegraphy)	500	250	—	− 50	90	9.0	2.0	—	0.25	30	6L6GX
												Class-C Amp. Plate-Mod.	325	225	—	− 45	90	9.0	3.0	—	0.25	20	
HY6L6-GTX*	21	6.3	0.9	500	300	3.0	11	0.5	8.0	7-pin O.	T-8D	Class-C Amp.-Osc.	500	250	—	− 50	90	9.0	2.0	—	0.5	30	HY6L6-GTX
												Class-C Amp. Plate-Mod.	400	225	—	− 45	80	9.0	3.0	16000	0.8	20	
T21 *	21	6.3	0.9	400	300	3.5	13	0.7	12	6-pin M.	T-6B	Class-C Amp. (Telegraphy)	400	250	—	− 50	95	8.0	3.0	—	0.2	25	T21
												Class-C Amp. Plate-Mod.	350	200	—	− 45	65	17	5.0	—	0.35	14	
RK49	21	6.3	0.9	400	300	3.5	11.5	1.4	10.6	6-pin M.	T-6B	Class-C Amp. (Telegraphy)	400	250	—	− 50	95	8.0	3.0	—	0.2	25	RK49
												Class-C Amp. (Telephony)	300	200	—	− 45	60	15	5.0	6700	0.34	12	
1614 *	21	6.3	0.9	375	300	3.5	10	0.4	12.5	7-pin O.	T-8D	Class-C Amp. (Telegraphy)	375	250	—	− 40	80	10	2.0	12500	0.1	21	1614
												Class-C Amp. Plate-Mod.	325	—	—	− 40	70	8.0	2.0	10000	0.1	15	
RK41 * [5]	25	2.5	2.4	600	300	3.5	13	0.2	10	5-pin M.	T-5BB	Class-C Amp. (Telegraphy)	600	300	—	− 90	93	10	3.0	—	0.38	36	RK41
RK39 *		6.3	0.9									Class-C Amp. (Telephony)	475	250	—	− 50	85	9.0	2.5	25000	0.2	26	RK39
HY61/807*	25	6.3	0.9	600	300	3.5	11	0.2	7.0	5-pin M.	T-5BB	Class-C Amp. (Telegraphy)	600	250	—	− 50	100	9.0	3.0	39000	0.22	40	HY61/807
												Class-C Amp. (Telephony)	475	225	—	− 50	83	9.0	2.0	25000	0.13	27.5	
815 **[7] [10]	25	6.3	1.6	500	200	4.0	13.3	0.2 [11]	8.5	8-pin O.	T-8FA [12]	Class-C Amp.-Oscillator	500	200	—	− 45	150	17	2.5	—	0.13	56	815
												Class-C Amp. Plate-Mod.	400	175	—	− 45	150	15	3.0	—	0.16	45	
254B	25	7.5	3.25	750	150	5.0	11.2	0.085	5.4	4-pin M.	T-4C	Class-C Amplifier	750	150	—	−135	75	—	—	—	—	30	254B
1624 *	25	2.5	2.0	600	300	3.5	11	0.25	7.5	5-pin M.	T-5DC	Class-C Amp. (Telegraphy)	600	300	—	− 60	90	10	5.0	30000	0.43	35	1624
												Class-C Amp. Plate-Mod.	500	275	—	− 50	75	9.0	3.3	25000	0.25	24	
RK66 *	30	6.3	1.5	600	300	3.5	12	0.25	10.5	5-pin M.	T-5C	Class-C Amp.-Oscillator	600	300	—	− 60	90	11	5.0	—	0.5	40	RK66
												Class-C Amp. Plate-Mod.	500	—	—	− 50	75	8.0	3.2	25000	0.23	25	
807 * [7]	30	6.3	0.9	750	300	3.5	11	0.2 [11]	7.0	5-pin M.	T-5BB	Class-C Amp. (Telegraphy)	750	250	—	− 50	100	8.0	3.0	—	0.22	50	807
1625 * [7]		12.6	0.45									Class-C Amp. Plate-Mod.	600	275	—	− 90	100	6.5	4.0	—	0.4	42.5	1625
RK20 [5]	40	7.5	3.0	1250	300	15	14	0.01	12	5-pin M.	T-5C	Class-C Amp. (Telegraphy)	1250	300	45	−100	92	36	11.5	—	1.6	84	RK20
RK20A		7.5	3.25									Class-C Amp. (Telephony)	1000	300	0	−100	75	30	10	23000	1.3	52	RK20A
RK46 [5]		12.6	2.5									Suppressor-Modulated Amp.	1250	300	−45	−100	48	44	11.5	—	1.5	21	RK46
												Grid-Modulated Amp.	1250	300	45	−142	40	7.0	1.8	—	1.5	20	
HY69 * [6]	40	6.3	1.5	600	300	5.0	15.4	0.23	6.5	5-pin M.	T-5D	Class-C Amp.-Oscillator	600	250	—	− 60	100	12.5	4.0	30000	0.25	42	HY69
												Class-C Amp. Plate Mod.	600	250	—	− 60	100	12.5	5.0	30000	0.35	42	
												Modulated Doubler	600	200	—	−300	90	11.5	6.0	35000	2.8	27	
829 ** [10]	40	6.3	2.25	500	225	40	14.5	0.1 [11]	7.0	Special	T-9B	Class-C Amp. (Telegraphy)	500	200	—	− 45	240	32	12	9300	0.7	83	829
		12.6	1.12									Class-C Amp. Plate-Mod.	425	200	—	− 60	212	35	11	6400	0.8	63	
												Grid-Modulated Amp.	500	200	—	− 38	120	10	2.0	—	0.5	23	
829A ** [10]	40	6.3	2.25	750	240	7.0	14.4	0.1 [11]	7.0	Special	T-9B	Class-C Amp.-Oscillator	750	200	—	− 55	160	30	12	18300	0.8	87	829A
		12.6	1.12									Class-C Amp. Plate-Mod.	600	200	—	− 70	150	30	12	13300	0.9	70	
												Grid-Modulated Amp.	750	200	—	− 55	80	5.0	0	—	0.7	24	
HY1269 * [6]	40	6.3	3.5	750	300	5.0	15.35	0.23	6.5	5-pin M.	T-5DB [13]	Class-C Amp.-Oscillator	750	300	—	− 70	120	12.5	4	—	0.25	63	HY1269
		12.6	1.75									Class-C Amp. Plate Mod.	600	250	—	− 70	100	10.0	4	35000	0.5	52.5	
												Grid-Modulated Amp.	750	300	—	—	80	—	—	—	—	20	

TABLE XV — TETRODE AND PENTODE TRANSMITTING TUBES — *Continued*

Type	Max. Plate Dissipation Watts	Cathode Volts	Cathode Amps.	Max. Plate Voltage	Max. Screen Voltage	Max. Screen Dissipation Watts	Interelectrode Capacitances ($\mu\mu$fd.) Grid to Fil.	Grid to Plate	Plate to Fil.	Base [1]	Socket Connections [2]	Typical Operation	Plate Voltage	Screen Voltage	Suppressor Voltage	Grid Voltage	Plate Current Ma.	Screen Current Ma.	Grid Current Ma.	Screen [3] Resistor Ohms	Approx. Grid Driving Power Watts [4]	Approx. Carrier Output Power Watts	Type
												Class-C Amp. (Telegraphy)	1250	300	——	— 70	138	14	7.0	——	1.0	120	
RK47	50	10	3.25	1250	300	10	13	0.12	10	5-pin M.	T-5D	Class-C Amp. Plate-Mod.	900	300	——	—150	120	17.5	6.0	——	1.4	87	RK47
												Grid-Modulated Amp.	1250	300	——	— 30	60	2.0	0.9	——	4.0	25	
												Class-C Amp. (Telegraphy)	1250	300	20	— 55	100	36	5.5	——	0.7	90	
312A	50	10	2.8	1250	500	20	15.5	0.15	12.3	6-pin M.	T-6C	Class-C Amp. Plate-Mod.	1000	——	40	— 40	95	35	7.0	22000	1.0	65	312A
												Suppressor-Mod. Amp.	1250	——	—85	— 50	50	42	5.0	22000	0.55	23	
												Class-C Amp. (Telegraphy)	1500	300	45	—100	100	35	7.0	34000	1.95	110	
804 [7]	50	7.5	3.0	1500	300	15	16	0.01 [11]	14.5	5-pin M.	T-5C	Class-C Amp. Plate-Mod.	1250	250	50	— 90	75	20	6.0	50000	0.75	65	804
												Grid-Modulated Amp.	1500	300	45	—130	50	13.5	3.7	——	1.3	28	
												Suppressor-Mod. Amp.	1500	300	—50	—115	50	32	7.0	——	0.95	28	
												Class-C Amp. (Telegraphy)	1500	3600	800	— 40	45	1.5	2.3	——	——	35	
825 ****[14]	50	6.3	0.75	2000	3600	——	3.4	——	——	Special	T-9C	Grid-Modulated Amp.	1500	3600	800	— 33	25	1.3	0.5	——	——	9.0	825
												Class-C Amp. (Telegraphy)	1000	200	——	—200	125	——	——	——	——	85	
305A	60	10	3.1	1000	200	6	10.5	0.14	5.4	4-pin M.	T-4CE	Class-C Amp. (Telephony)	800	200	——	—270	125	——	——	——	——	70	305A
												Class-C Amp. (Telegraphy)	1250	300	——	— 80	175	22.5	10	——	1.5	152	
HY67	65	6.3 12.6	4.0 2.0	1250	300	10	——	0.19	14.5	5-pin M.	T-5DB	Class-C Amp. Plate-Mod.	1000	300	——	—150	145	17.5	14	——	2.0	101	HY67
												Grid-Modulated Amp.	1250	300	——	——	78	——	——	——	——	32.5	
												Class-C Amp. (Telegraphy)	1500	300	——	— 90	150	24	10	50000	1.5	160	
814 [7]	65	10	3.25	1500	300	10	13.5	0.1 [11]	13.5	5-pin M.	T-5D	Class-C Amp. Plate-Mod.	1250	300	——	—150	145	20	10	40000	3.2	130	814
												Grid-Modulated Amp.	1500	250	——	—120	60	3.0	2.5	——	4.2	35	
												Class-C Amp. (Telegraphy)	1000	150	——	—160	100	——	——	——	——	33	
282A	70	10	3.0	1000	250	5.0	12.2	0.2	6.8	4-pin M.	T-4C	Class-C Amp. Plate-Mod.	750	150	——	—180	100	——	50	——	——	50	282A
												Class-C Amp. (Telegraphy)	2000	500	——	—200	150	11	6.0	33000	1.4	230	
8001 [7]	75	5.0	7.5	2000	500	25	11	0.1 [11]	5.5	7-pin J.	T-7CB	Class-C Amp. Plate-Mod.	1800	400	——	—130	135	11	8.0	16000	1.7	178	8001
												Suppressor-Mod. Amp.	2000	500	—300	—130	55	27	3.0	——	0.4	35	
												Class-C Amp. (Telegraphy)	2000	500	60	—200	150	11	6.0	——	1.4	230	
HK257 *	75	5.0	7.5	4000	500	25	13.8	0.04	6.7	7-pin J.	T-7CB	Class-C Amp. Plate-Mod.	1800	400	60	—130	135	11	8.0	——	1.7	178	HK257
												Suppressor-Modulated Amp.	2000	500	—300	—130	55	27	3.0	——	0.4	35	
												Class-C Amp. (Telegraphy)	1500	400	75	—100	180	28	12	40000	2.2	200	
828 [7]	80	10	3.25	2000	750	23	13.5	0.05 [11]	14.5	5-pin M.	T-5C	Class-C Amp. Plate-Mod.	1250	400	75	—140	160	28	12	30000	2.7	150	828
												Grid-Modulated Amp.	1500	400	75	—150	80	4.0	1.3	——	1.3	41	
												Class-C Amp. (Telegraphy)	2000	400	45	—100	150	55	13	21000	2.0	210	
RK28 [5]	100	10	5.0	2000	400	35	15	0.02	15	5-pin J.	T-5C	Class-C Amp. (Telephony)	1500	400	45	—100	135	52	13	21000	2.0	155	RK28
												Suppressor-Modulated Amp.	2000	400	—45	—100	85	65	13	——	1.8	60	
												Grid-Modulated Amplifier	2000	400	45	—140	80	20	4.0	——	0.9	75	
												Class-C Amp. (Telegraphy)	2000	400	——	—100	180	40	6.5	——	1.0	250	
RK48 [5] RK48A	100	10	5.0	2000	400	22	17	0.13	13	5-pin J.	T-5D	Class-C Amp. (Telephony)	1500	400	——	—100	148	50	6.5	22000	1.0	165	RK48 RK48A
												Grid-Modulated Amplifier	1500	400	——	—145	77	10	1.5	——	1.6	40	
												Class-C Amp. (Telegraphy)	2000	400	——	— 90	180	15	3.0	107000	0.5	260	
813	100	10	5.0	2000	400	22	16.3	0.2 [11]	14	7-pin J.	T-7DA	Class-C Amp. (Telephony)	1600	400	——	—130	150	20	6.0	21600	1.2	175	813
												Grid-Modulated Amplifier	2000	400	——	—120	75	3.0	——	——	——	50	

TABLE XV — TETRODE AND PENTODE TRANSMITTING TUBES — *Continued*

Type	Max. Plate Dissipation Watts	Cathode		Max. Plate Voltage	Max. Screen Voltage	Max. Screen Dissipation Watts	Interelectrode Capacitances (μμfd.)			Base [1]	Socket Connections [2]	Typical Operation	Plate Voltage	Screen Voltage	Suppressor Voltage	Grid Voltage	Plate Current Ma.	Screen Current Ma.	Grid Current Ma.	Screen [3] Resistor Ohms	Approx. Grid Driving Power Watts [4]	Approx. Carrier Output Power Watts	Type
		Volts	Amps.				Grid to Fil.	Grid to Plate	Plate to Fil.														
850	100	10	3.25	1250	175	10	17	0.25[11]	25	4-pin J.	T-3B	Class-C Amp. (Telegraphy)	1250	175	—	−150	160	—	35	—	10	130	
												Class-C Amp. (Telephony)	1000	140	—	−100	125	—	40	—	10	65	850
												Grid-Modulated Amplifier	1250	175	—	− 13	110	—	—	—	—	40	
860	100	10	3.25	3000	500	10	7.75	0.08[11]	7.5	4-pin M.	T-4CB	Class-C Amp.-Oscillator	3000	300	—	−150	85	25	15	—	7.0	165	860
												Class-C Amp. Plate-Mod.	2000	220	—	−200	85	25 [7]	38	100000	17	105	
RK28A	125	10	5.0	2000	400	35	15	0.02	15	5-pin J.	T-5C	Class-C Amp. (Telegraphy)	2000	400	45	−100	170	60	10	—	1.6	250	
												Class-C Amp. Plate-Mod.	1500	400	45	−100	135	54	10	18500	1.6	150	RK28A
												Grid-Modulated Amp.	2000	400	45	− 55	80	18	2.0	—	0.5	60	
												Suppressor-Mod. Amp.	2000	—	−45	−115 [7]	90	52	11.5	30000	1.5	60	
803	125	10	5.0	2000	600	30	17.5	0.15[11]	29	5-pin J.	T-5C	Class-C Amp. (Telegraphy)	2000	500	40	− 90	160	45	12	—	2.0	210	
												Class-C Amp. (Telephony)	1600	500	100	− 80	150	20	4.0	20000	4.0	155	803
												Suppressor-Modulated Amp.	2000	—	−110	−100	80	48	15	35000	2.5	53	
												Grid-Modulated Amplifier	2000	600	40	− 80	80	20	4.0	—	2.0	53	
RK65	215	5.0	14	3000	500	35	10.5	0.24	4.75	4-pin J.	T-3BC	Class-C Amp. (Telegraphy)	3000	400	—	−100	240	70	24	—	6.0	510	RK65
												Class-C (Plate & Screen Mod.)	2500	—	—	−150	200	70	22	30000	6.3	380	
861	400	11	10	3500	750	35	14.5	0.1[11]	10.5	Special	T-1B	Class-C Amp. (Telegraphy)	3500	500	—	−250	300	40	40	—	30	700	861
												Class-C Amp. (Telephony)	3000	375	—	−200	200	—	55	70000	35	400	

[1] S. — small; M. — medium; O. — octal; J. — jumbo.
[2] See Transmitting Tube Base Diagrams.
[3] In plate-and-screen modulated Class-C amplifiers, connect screen-dropping resistor direct to plate and by-pass for r.f. only. This does not apply to the 828.
[4] See Chapter 4–8 for discussion of grid driving power.
[5] Obsolete type. [6] Instant-heating filament for mobile operation.
[7] Intermittent commercial and amateur service ratings.
[8] Triode connection — screen-grid tied to plate.
[9] Calculated on basis of 33% efficiency at 100% modulation.
[10] Dual tube. Values for both sections, in push-pull.
[11] With external shielding.
[12] Terminals 3 and 6 must be connected together.
[13] Early tubes of this type do not have center-tapped filament.
[14] Inductive output amplifier, with separate output and current-collecting electrodes, for operation above 300 Mc. In using values shown in tables, for "Plate" read "Collector," for "Screen" read "Grids No. 2 & 3," for "Suppressor" read "Grid No. 4," and for "Grid" read "D.C. Grid No. 1."
[15] See Receiving Tube Base Diagrams.
Frequency limits:
* May be used at full ratings on 56–60 Mc. band and lower.
** May be used at full ratings on 112-Mc. band and lower.
*** May be used at full ratings on 224-Mc. band and lower.
**** May be used at full ratings above 300 Mc.

TABLE XVI — TELEVISION TRANSMITTING TUBES

Type	Name	Socket Connections [1]	Heater		Use	Collector Voltage	Pattern Electrode Voltage	Anode No. 2 Voltage	Anode No. 1 Voltage	Cut-off Grid Voltage [2]	Signal Plate Voltage	Collector Current μa. [3]	Beam Current μa.	Pattern Electrode Current [4]	Signal [5] Plate Input	Beam [6] Resolution Capability	Signal Output Volts	Type
			Volts	Amps.														
1840	Orthicon	M	6.3	0.6	Direct and film pickup	—	—	300 [7]	300	−40	—	—	1.0	—	—	—	0.03–0.15	1840
1847	Iconoscope	A	6.3	0.6	Direct pickup	600	—	600	150	−120	—	—	—	—	—	—	—	1847
1848	Iconoscope	N	6.3	0.6	Direct pickup	1200	—	1000 [7]	300	−40	—	0.1	0.25	—	—	—	0.015–0.075	1848
1849	Iconoscope	J	6.3	0.6	Film pickup	1000	—	1000	360	−25	—	0.1	—	—	—	—	—	1849
1850	Iconoscope	J	6.3	0.6	Direct pickup	Same as 1849												1850
1898	Monoscope	E	2.5	2.1	Test pattern	—	950	1000	300	−60	—	—	2.0	2.0	—	—	—	1898
1899	Monoscope	K	2.5	2.1	Test pattern	1700	1500	1500	390	−60	—	—	4.0	2.5	—	500	—	1899
2203	Monotron	L	2.5	2.1	Test pattern	—	—	1000	400	−20	−150	—	—	—	5	300	0.1	2203

[1] Refer to Cathode Ray Tube Socket Connections.
[2] Adjust bias for minimum (most negative) value for satisfactory signal. Max. resistance in grid circuit should not exceed 1 meg.
[3] Collector current measurements made with mosaic not illuminated.
[4] Peak-to-peak signal value in μa.
[5] In mw./sq. cm. max.
[6] With full scanning.
[7] Accelerating electrode (Grid No. 2) voltage same as Anode No. 2 voltage.

CHAPTER TWENTY-TWO

Radio Operating Practice

THE object of most radio communication is the transmission of intelligence from one point to another, accurately and in as short a time as possible. For efficiency in communication, each class of radio service has set up operating methods and procedure which provide the most expeditious handling of radio traffic. Skilled operators need not only to be expert in transmitting and receiving code or voice signals, but also must be thoroughly familiar with the uniform practices observed in the particular class of service concerned. The material following, although generally that of the amateur service, is typical of the basic operating procedure employed in nearly all services with necessary modifications.

Radiotelegraph Operation

The radiotelegraph code is used for *record* communication. Aside from his ability to copy at high speeds, a good operator is noted for his neatness and accuracy of copy. It is evident that a radio operator should copy exactly what is sent, and if there is any doubt about a letter or word he should query the transmitting operator about it.

An operator with a clean-cut, slow, steady method of sending has a big advantage over a poor operator. Good sending is a matter of practice, but patience and judgment are just as important qualities in an operator as is a good fist. Very often, transmission at moderate speeds moves traffic more quickly than faster but erratic sending. In hand operating any unusual words should be sent twice, the word being repeated following transmission of "?". A transmitting operator who is notified of interference on his frequency, either by static or man-made, should adjust his speed of sending to require the least number of "fills." Every operator should have facilities for monitoring to check the accuracy of his sending. Accuracy of transmission comes *first*.

To this end, an operator copying in longhand should use extreme care in writing, so there will be no chance of confusing an "l" with an "e", and the like. On a typewriter, best practice is always to double-space between lines, write ten words to a line with an extra space or two after the fifth word in each line, triple-space between lines every fifth line. This is for the purpose of rapidly determining the number of words in a message as it is sent. As the operator gains mill-copying skill he will be able to typewrite subconsciously in this pattern, an example of which is shown below.

General procedure — (1) Calls should be made by transmitting not more than three times the call signal of the station called, and DE, followed by one's own call signal sent not more than three times, thus: VE2BE VE2BE VE2BE DE W1AW W1AW W1AW. In amateur practice this form is repeated completely once or twice. The call signal of the calling station must be inserted at frequent intervals for identification purposes. Repeating the call signal of the called station five times and signing not more than twice has proved excellent practice in connection with break-in operation (the receiver being kept tuned to the frequency of the called station). The use of a break-in system is highly recommended to save time and reduce unnecessary interference.

2) Answering a call: Call three times (or less); send DE; sign three times (or less); and after contact is established decrease the use of the call signals of both stations to once or twice. Example:

W1GNF DE W1AW GE OM GA K (meaning, "Good evening, old man, go ahead").

IN FULL FORCE STOP THE ATTACK WILL BE SUPPORTED BY

BOMBARDMENT AVIATION WITH LIGHT AND MEDIUM TANKS IMMEDIATELY PRECEDING THE

ARTILLERY UNITS STOP ATTACHED TO EACH DIVISION WILL BE UNITS

OF THE SIGNAL CORPS FROM FORTMONMOUTH NEWJERSEY UNDER COMMAND OF

MAJOR J WORTHINGTON SMITH WHOSE DUTIES WILL BE SUPPLYING POINT

TO POINT COMMUNICATION FOR STAFF HEADQUARTERS STOP THIRTY FIVE HIGH

SPEED OPERATORS WILL BE REQUIRED BY EACH STAFF HEADQUARTERS FOR

THE VOLUME OF TRAFFIC EXPECTED DURING THESE

3) Ending signals and sign off: The proper use of $\overline{AR}$, K and $\overline{VA}$ ending signals is as follows: $\overline{AR}$ (end of transmission) shall be used at the end of messages during communication; and also at the end of a call, indicating when so used that communication is not yet established. In the case of CQ calls, the international regulations recommend that K shall follow. K (invitation to transmit) shall also be used at the end of each transmission when answering or working another station, carrying the significance of "go ahead." $\overline{VA}$ (or $\overline{SK}$) shall be used by each station only when signing off, this followed by the call of the station being worked and your own call sent once for identification purposes. Examples:

($\overline{AR}$) — W1KQY DE W1CTI $\overline{AR}$ (showing that W1CTI has not yet gotten in touch with W1KQY but has called and is now listening for his reply). Used after the signature between messages, it indicates the end of one message. There may be a slight pause before starting the second of the series of messages. The courteous and thoughtful operator allows time for the receiving operator to enter the time on the message and put another blank in readiness for the traffic to come. If K is added, it means that the operator wishes his first message acknowledged before going on with the second message. If no K is heard, preparations should be made to continue copying.

(K) — W1JEQ DE W6AJM R K. (This arrangement is very often used for the acknowledgment of a transmission. When anyone overhears this he knows at once that the two stations are in touch, communicating with each other, that W1JEQ's transmission was all understood by W6AJM, and that W6AJM is telling W1JEQ to go ahead with more of what he has to say.) W9KJY DE W7NH NR 23 R K. (Evidently W9KJY is sending messages to W7NH. The contact is good. The message was all received correctly. W7NH tells W9KJY to "go ahead" with more.)

($\overline{VA}$) — R NM NW CUL VY 73 $\overline{AR}$ $\overline{VA}$ W6TI DE W7WY. (W7WY says, "I understand OK, no more now, see you later, very best regards. I am through with you for now and will listen for whomever wishes to call. W7WY 'signing off' with W6TI.")

4) If a station sends test signals, to adjust the transmitter or at the request of another station to permit the latter to adjust its receiving apparatus, the signals must be composed of a series of Vs with the call signal of the transmitting station inserted at frequent intervals.

5) When a station receives a call without being certain that the call is intended for it, it should not reply until the call has been repeated and is understood. If it receives the call but is uncertain of the call signal of the sending station, it should answer using the signal ··— —·· (?) instead of the call signal of this latter station. QRZ? (see Appendix) is the appropriate signal to use, followed by your call, to ask who is calling and get this station to call again.

6) Receipting for conversation or traffic: Never send a single acknowledgment until the transmission has been entirely received. "R" means, "All right, OK, I understand completely." When a poor operator, commonly called a "lid," has only received part of a message, he will answer, "R R R R R R R R R R, sorry, missed address and text, pse repeat" and every good operator who hears will rave inwardly. Use "R" only when all is received correctly. Example:

When all the message has been received correctly, a short call with "NR 155 R K" or simply "155 K" is sufficient.

Abbreviations — To speed up radiotelegraph communication, a number of standard and special abbreviations have been devised. As time is a factor, uniform practices in operating are necessary to insure a ready understanding by both operators. Therefore proficiency in the commonly used abbreviations is to be desired. Some of those prescribed by the regulations attached to the International Telecommunications Convention and used by all radio services follow:

C	Yes.
N	No.
W	Word(s).
AA	All after (used after a question mark to request a repetition).
AB	All before (similarly).
AL	All that has just been sent (similarly).
BN	All between (similarly).
BQ	Announcement of reply to a request for rectification.
CL	I am closing my station.
GA	Go ahead (or resume sending).
JM	If I may send, make a series of dashes.
	To stop my transmission, make a series of dots.
MN	Minute(s) (to indicate duration of a wait).
NW	I resume transmission.
OK	We are in agreement.
RQ	Announcement of a request for rectification.
UA	Do you agree?
WA	Word after (to be used after a question mark to request a repetition).
WB	Word before (similarly).
ADR	Address (similarly).
PBL	Preamble (similarly).
SIG	Signature (similarly).
TXT	Text (similarly).
XS	Atmospherics.
YS	See your service advice.
ABV	Use abbreviations.
CFM	Confirm, or I confirm.
ITP	The punctuation counts.
MSG	Prefix to radiotelegram.
REF	Refer to, or referring to.
RPT	Repeat, or I repeat (to be used to ask or to give repetition of such traffic as is indicated after the abbreviation).
SVC	Prefix to service message.
TFC	Traffic.
P	Indicator or private telegram in the mobile service (to be used as a prefix).
NIL	I have nothing for you.

XXX XXX XXX DE . . . , urgent signal indicating message to follow regarding safety of mobile station or persons in sight therefrom (PAN is similarly used by aircraft); TTT TTT TTT DE . . . , safety signal sent before meteorological warning messages and those concerning safety of navigation; SOS SOS SOS DE . . . , distress signal sent only by mobile stations in grave danger when requesting assistance (MAYDAY is the radiotelephone distress call similarly used).

In the text of a message, no words should be abbreviated by the operator unless they are so written by the sender. If the text includes punctuation, it should be spelled out in English.

Message Handling — Each service — commercial, military, amateur — prescribes its own message form, but all are generally similar to the example here given. A message is broadly divided into four parts: (1) the preamble; (2) the address; (3) the text; (4) the signature. The preamble contains the following:

a) Number (of this message).
b) Station of origin.
c) Check (number of words in text).
d) Place of origin.
e) Time filed.
f) Date.

Therefore, it might look like this:

NR 34 WLTK JH 13
CHICAGO ILL 450 PM MAY 12 1942
CAPT WM MONTGOMERY
MUNITIONS BLDG
WASHINGTON DC BT
SIXTH CORPS AREA HAS 68
MEN AVAILABLE FOR ACTIVE DUTY
FIXED SERVICE REGARDS BT
HUNTER WLTK

This is obviously the 34th message (of that day or that month, as the policy of the station prescribes) from station WLTK. The "JH 13" is the "sine" of the operator plus the number of words in the message text. All operators designate themselves with a personal sine to be used on message traffic and on the air; in most cases it consists of the operator's initials. The signal BT (double-dash) is used to separate the text from address and signature.

Several radiograms may be transmitted in series (QSG. . . . .) with the consent of the station which is to receive them. As a general rule long radiograms should be transmitted in sections of approximately fifty words, each ending with ·· — — ·· (?), meaning, "Have you received the message correctly thus far?"

If the first part of a message is received but substantially all of the latter portions lost, the request for the missing parts is simply RPT TXT AND SIG, meaning, "Repeat text and signature." PBL and ADR may be used similarly for the preamble and address of a message. RPT ALL or RPT MSG should not be sent unless nearly all of the message is lost. When a few word-groups in conversation or message handling have been missed, a selection of one or more of the following abbreviations are used to ask for a repeat on the parts in doubt.

Abbreviation	*Meaning*
?AA	Repeat all after
?AB	Repeat all before
?AL	Repeat all that has been sent
?BN...AND	Repeat all between..and....
?WA	Repeat the word after
?WB	Repeat the word before

The good operator will ask only for what fills are needed, separating different requests for repetition by using the break sign or double dash (— · · · —) between these parts. There is seldom any excuse for repeating a whole message just to get a few lost words.

Another interrogation method is sometimes used, the question signal (· · — — · ·) being sent between the last word received correctly and the first word (or first few words) received after the interruption.

As an example of what procedure would be followed in the transmission of a commercial message, let us assume that a passenger aboard the S.S. *Coastwise* wishes to notify a friend of his arrival. Station WKCZ aboard the ship would call a shore station (WSC) and the following would ensue:

WSC WSC WSC DE WKCZ WKCZ WKCZ P AR K

WKCZ WKCZ WKCZ DE WSC ANS 700 K

WSC WSC WSC DE WKCZ P 1 CK12 SS COASTWISE 0827 MAY 10 BT MISS JANET SHANNON 18 LAMBERT STREET BOSTON BT ARRIVE PIER 18 TONIGHT LOVE BT JOHN AR K

WKCZ DE WSC R 1 K

WSC DE WKCZ QRU SK

WKCZ DE WSC R SK

If the receiving operator missed the number of the pier of arrival, he would send:

PIER ?? TONIGHT or ?WA PIER.

whereupon the transmitting operator would say:

PIER 18 TONIGHT

and then would stand by for an acknowledgment of receipt (R).

The service message — When one station has a message to transmit to another concerning the handling of a previous message, the message is titled a "service" and is indicated by "SVC" in the preamble when sent. It may refer to non-delivery, delayed transmission, errors, or to any phase of message handling activity. Words may be abbreviated in the text of the service message.

Provisions in the Communications Act of 1934 make it a misdemeanor to give out information of any sort to any person except the addressee of a message or his authorized agent. When for some reason a message cannot be delivered, a service message should be sent to the station of origin containing information to that effect.

Land-line check — The land-line or "text" count, consisting of count only of the words in the body or text of the message, is probably now most widely used. (The "cable" count covers all words in the address and signature, as well, probably accounting for its unpopularity.) When in the case of a few exceptions to the basic rule in land-line checking, certain words in the address, signature or preamble are counted, they are known as extra words and all such are so designated in the check right after the total number of words.

The check includes:

1) All words, figures and letters in the body, and
2) the following extra words
   (a) Signature except the first, when there are more than one (a title with signature does not count extra, but an address following a signature does).
   (b) Words "report delivery," or "rush" in the check.
   (c) Alternate names and/or street addresses, and such extras as "personal" or "attention."

Dictionary words in most languages count as one word irrespective of length of the word. In counting figures, a group of five digits or less counts as one word. Bars of division and decimal points may constitute one or more of the digits in such a group. It is recommended that, where feasible, words be substituted for figures to reduce the possibility of error in transmission. Detailed examples of word counting are about as difficult in one system of count as another.

AMATEUR RADIO STATION LOG

Frequency 3755 KCS — Approximate location —
Type of emission A1 — Type of vehicle or mobile use in which installed —

DATE TIME	STATION CALLED	CALLED BY	STATION HEARD OR WORKED			IF QSO REPEATED: NO. HAS BEEN			TIME OF FIRST QSO	REMARKS, QTH, CHANGES FROM PREVIOUSLY RECORDED DATA, ETC.	QSL
5:45PM	W6TM	X	5	6	9	5	5	9	6:43PM	Nice report	RR
6:08	VE5EP	X	5	7	9					No soap.	
6:14	W7ILR	W7NH								Hi! How those YL's can chew!	
6:37	WFE5A	X	4	6	8	5	6	8	7:12	Denver, Colo.	SR
7:20	CQ	X									
7:22	X	W8BPE	3	4	9	3	3	9	7:33	Too early for 8- sig work	
7:45 PM 5-3-36 7:55 AM	CQ for evening W7APS	X							7:30AM	Hash	RR
7:31	X	WLKGO							7:53	Closed shop → AARS	
8:07	CQ	X									
8:13	W9FLG	X	5	8	9	5	7	9	8:38	W9DEB at Key there	
8:40	CQ	W5DXA	5	9	9					Swell sig!!	
6:10PM	CQ	X									
6:13	X	VE4CM	5	7	9				6:24PM	Time Line Station	SS
6:32	W6GXM	X							6:59	Los Angeles	
7:00	QRT	—									

Keeping a log — FCC requires nearly every radiocommunication station to keep a complete operating record or "log," including such data as times and dates of transmissions, stations contacted, message traffic handled, input power to the transmitter, frequency used, and signature or "sine" of the operator in charge.

Log-keeping procedure differs with each class of communications service. A typical page from an amateur radio station log, prepared on the standard ARRL form, is shown above. Being that of the amateur service the example here shown is quite free in style, yet it is illustrative of the form and data generally required.

Time systems — While most continental telegraph and radio circuits use local standard (or war) time in log-keeping and message-handling, international radiocommunication stations and the military services now use a 24-hour system of time-keeping. One is Greenwich Civil Time, a 24-hour clock system used in international radiocommunication work. All figures are based on the time in Greenwich, England, the city of 0° meridian fame. 0000 represents midnight in Greenwich; 0600 represents 6 A.M. there; 1200 is noon; 1800 is 6 P.M.; 2400 is again midnight and the same as 0000 of the following day. The figures must be corrected to each individual time zone. The Central War Time zone is five hours behind Greenwich, so that 0630 GCT (6:30 A.M. in Greenwich) would represent 1:30 A.M. CWT, for example. As an example of reverse translation, 9:30 A.M. CWT would be designated in the log as 1430 GCT. EWT is four hours behind GCT; MWT, six hours; PWT, seven.

At present the military services use simply a 24-hour clock, based on local time, without correcting to Greenwich or any other longitude. Then 6 A.M. CWT becomes 0600; 6 A.M. EWT is 0600, and so on. The principal advantage of this system is an elimination of the necessity for the use of P.M. or A.M. abbreviations. The Greenwich system accomplishes this and, more important, provides a standard basis upon which time in all countries of the world may be based.

¶ Radiotelephone Operation

Procedure to be used in radiotelephone operation follows the foregoing general principles closely. The operator makes little use of the special abbreviations available for code work, of course, since he may directly speak out their full meaning. Radiotelephony is used principally for command and control purposes, such as communication between ground stations and aircraft, where recorded message traffic is at a minimum. Transmissions consist mostly of short bursts with little variety in form or content, and each operator must become familiar with procedure methods adopted by the particular service.

Unusual words should be avoided in the interest of accuracy if possible when drafting messages. When they unavoidably turn up difficult words may be repeated, or *repeated and spelled*. The operator says "I will repeat" when thus retransmitting a difficult word or expression. It is recommended that use of *Q* code and special abbreviations be minimized in voice work insofar as possible, and the full expression (with conciseness) be substituted.

The speed of radiotelephone transmission

WESTERN UNION WORD LIST

A — ADAMS	J — JOHN	S — SUGAR
B — BOSTON	K — KING	T — THOMAS
C — CHICAGO	L — LINCOLN	U — UNION
D — DENVER	M — MARY	V — VICTOR
E — EDWARD	N — NEW YORK	W — WILLIAM
F — FRANK	O — OCEAN	X — X-RAY
G — GEORGE	P — PETER	Y — YOUNG
H — HENRY	Q — QUEEN	Z — ZERO
I — IDA	R — ROBERT	

Example: W1EH . . . W 1 EDWARD HENRY.

For best understandability numerals should be pronounced as follows:

Zē'-rō 0	Thuh-ree' 3	Sev'-ven 7
Wun 1	Fō'-wer 4	Ate 8
Too 2	Fī'-yiv 5	Nī'-yen 9
	Siks 6	

(with perfect accuracy) depends almost entirely upon the skill of the two operators involved. One must learn to speak at a rate allowing perfect understanding as well as permitting the receiving operator to copy down the message text, if that is necessary. Because of the similarity of many English speech sounds, the use of alphabetical word lists has been found necessary. One such list — that used by the Army and Navy — is given in Chapter Sixteen. Another which has been widely used is the Western Union word list, shown herewith. A copy of this list can be obtained from the local Western Union office and posted beside the telephone to use when telephoning messages containing initials and difficult words. Such code words prevent errors due to phonetic similarity. All voice-operated stations should use a *standard* list as needed to identify call signals or unfamiliar expressions.

Names of states and countries may be used for identifying letters in radiotelephone work.

¶ Net Operation

In field work many military communications units operate in "net" fashion, wherein one station (at the headquarters of the unit) is designated as net-control station (NCS) to direct the business of the net. The operation of all stations in the same net is on one single frequency, so that any one operator may hear any other station(s) without retuning his receiver. "Break-in" is advantageously employed here — the receiver is kept running during transmissions, so that nearly simultaneous two-way communication is possible.

Briefly, the procedure in net operation is as follows: The NCS calls the net together at a pre-announced time and using a predetermined call. Immediately, station members of the net reply in alphabetical (or some other predetermined) order, reporting on the NCS's signal strength and stating what traffic is on hand and for whom. The NCS acknowledges, meanwhile keeping an account of all traffic on hand, by stations. He then directs the transfer of messages from one station to another, giving preference to any urgent traffic so indicated at roll call. When all traffic has been distributed and it is apparent there is no further business, the NCS will close the net, in most cases maintaining watch on the net frequency for any special traffic which might appear.

¶ ARRL Operating Organization

The American Radio Relay League maintains, at its headquarters in West Hartford, Connecticut, a Communications Department normally concerned with the practical operating activities of League members. A large field organization, headed by Section Communications Managers in each of the seventy-one sections into which the country is divided, consists of amateur stations especially selected for skill in certain phases of amateur communications work. There are appointments as Official Relay Station or Official 'Phone Station for traffic-handling; as Official Observer for monitoring of frequency and quality of transmissions; as Route Manager and 'Phone Activities Manager for the establishment of trunk lines and networks; as Emergency Coordinator for the promotion of amateur preparedness in the event of loss of commercial communications facilities through natural disaster. Mimeographed bulletins for each group of appointees keep members informed of the latest news and developments. Special activities, such as proficiency awards, contests and drills, promote operating skill and thereby add to the ability of amateur radio to function "in the public interest, convenience and necessity." A special section is reserved each month in *QST*, the League's official organ, for amateur news from every section of the country.

With the suspension of amateur activities as a result of the war, all such appointments have been "frozen" for the duration excepting those of Emergency Coördinators, who are engaged in promoting the War Emergency Radio Service. Complete information on all peacetime appointments and League awards for operating skills is included in the booklet, *Operating an Amateur Radio Station*. Members of the League may obtain a copy of this booklet from League Headquarters free upon request; to others, the cost is 10 cents.

¶ Amateur Licensing in the United States

For the duration of the war, amateur operation in this country is prohibited. Amateur frequencies have been temporarily withdrawn and, although amateur station licenses have not been cancelled, no new ones have been issued and no applications for renewal or modification are entertained. However, every effort will be made to reassign station calls to previous holders, after the war is over.

Amateur operator licenses remain in force, being valued by the military services as an attestation of radio proficiency, and new operator licenses are still being issued at the numerous FCC examining points. Details of the requirements, and a study guide for those preparing for the examination, are to be found in a League publication, *The Radio Amateur's License Manual*, available from the American Radio Relay League, West Hartford 7, Conn., for 25¢, postpaid. This publication, which is frequently revised, contains also the text of the U. S. regulations governing amateur stations and operators, and pertinent extracts from the basic Communications Act of 1934. It should be studied carefully by anyone intending to enter amateur radio or planning to apply for an amateur operator's license.

The Communications Act lodges in the Federal Communications Commission authority to classify and license radio stations and to

prescribe regulations for their operation. Pursuant to the law, FCC has issued detailed regulations for the amateur service.

An amateur is a duly authorized person interested in radio technique solely with a personal aim and without pecuniary interest. Amateur operator licenses are given to United States citizens who pass an examination on radio operation and apparatus and on the provisions of law and regulations affecting amateurs, and who demonstrate ability to send and receive the International Morse Code at 13 words per minute. Amateur station licenses are granted only to licensed amateur operators and permit radio communication between such amateur stations for amateur purposes, i.e., for personal and noncommercial aims flowing from an interest in radio technique. An amateur station may not be used for material compensation of any sort nor for broadcasting. Narrow bands of frequencies beginning at 1,715, 3,500, 7,000, 14,000, 28,000, 56,000, 112,000, 224,000 and 400,000 kc., as shown in the adjoining column, are allocated exclusively for use by amateur stations, and amateurs also may operate on any frequency above 300,000 kc. Amateur transmissions may be on any frequency within the assigned bands. All the frequencies may be used for c.w. telegraphy and certain of them are available for radiotelephony by any amateur, while certain other frequencies are reserved for radiotelephone use by persons who have had at least a year's experience and who pass a more difficult examination resulting in the issuance of what is called a Class A license. The input to the final stage of amateur stations is limited to 1,000 watts and on frequencies below 60,000 kc. must be adequately filtered direct current. Emissions must be free from spurious radiations. The licensee must provide for the measurement of the transmitter frequency and establish a procedure for checking it regularly. A complete log of station operation must be maintained, with specified data. The amateur station license also authorizes the holder to operate portable and portable-mobile amateur stations in certain frequency bands, subject to certain further regulations. An amateur station may be operated only by the holder of an amateur operator license, but any licensed amateur operator may operate any amateur station. All radio licensees are subject to heavy penalties for violation of the law or regulations.

The frequent changes in amateur regulations, and the new requirements which may come up during the war under special orders of FCC, are regularly reported in the League's magazine, *QST*.

FCC Frequency Allocations

The following is a condensed table of frequency allocations established by the Federal Communications Commission in the United States, as they existed prior to the war. Certain departures from it under wartime conditions are, of course, to be expected.

Frequencies (Kc.)	*Allocation*
10–103	Fixed, government.
103–141	Coastal telegraph, government.
143–193	Maritime calling, ship telegraph, fixed and coastal telegraph. (190 kc. to state police and government.)
194–391	Government, fixed, airport, aircraft (375 kc. to direction finding).
392–548	Coastal telegraph, government, ship telegraph, aircraft, intership 'phone. (500 kc. to maritime calling and government).
550–1,600	Broadcasting (1,592 to Alaska services).
1,600–1,712	Geophysical, relay, police, government, experimental, marine fire, aviation, motion picture.
1,715–2,000	*Amateur.*
2,004–2,500	Experimental visual and relay broadcast, police, government, ship harbor, fixed, miscellaneous.
2,504–3,497.5	Coastal harbor, government, aviation, fixed, miscellaneous.
3,500–4,000	*Amateur.*
4,005–6,000	Government, aviation, fixed.
6,020–6,190	International broadcast, government.
6,200–6,990	Coastal telegraph and 'phone, government, fixed, miscellaneous.
7,000–7,300	*Amateur.*
7,305–9,490	Government, fixed, aviation, ship telegraph, coastal telegraph, miscellaneous.
9,510–9,690	International broadcast.
9,710–11,000	Government, fixed aviation.
11,010–11,685	Ship telegraph, maritime calling, government, coastal telegraph, fixed, aviation, miscellaneous.
11,710–11,890	International broadcast, government.
11,910–13,990	Aviation, fixed, government, ship telegraph, coastal telegraph, miscellaneous.
14,000–14,400	*Amateur.*
14,410–15,085	Fixed.
15,110–15,330	International broadcast, government.
15,355–17,740	Fixed, government, aviation, ship and coastal telegraph, miscellaneous.
17,760–17,840	International broadcast.
17,860–21,440	Fixed, government, aviation.
21,460–21,650	International broadcast, government.
21,650–23,175	Coastal telegraph, government, ship telegraph, miscellaneous.
23,200–25,000	Aviation, government, miscellaneous.
25,025–26,975	Broadcast, government.
27,000–27,975	Government, general communication.
28,000–30,000	*Amateur.*
30,000–42,000	Police, government, relay broadcast, coastal and ship harbor, miscellaneous.
42,000–50,000	Broadcast and educational (FM).
50,000–56,000	Television, fixed.
56,000–60,000	*Amateur.*
60,000–112,000	Government, television.
112,000–116,000	*Amateur.*
116,110–139,960	Broadcast, government, aviation, police, miscellaneous.
140,100–143,880	Aviation.
144,000–224,000	Government, television, fixed.
224,000–230,000	*Amateur.*
230,000–400,000	Government, television, fixed.
401,000 and above	Amateur and experimental.

"Q CODE"

IN THE REGULATIONS accompanying the existing International Radiotelegraph Convention, there is a very useful internationally agreed code designed to meet the major needs in international radio communication. This code is given in the following table. The abbreviations themselves have the meanings shown in the "answer" column. When an abbreviation is followed by an interrogation mark (?), it assumes the meaning shown in the "question" column.

Abbreviation	*Question*	*Answer*
QRA	What is the name of your station?	The name of my station is .....
QRB	How far approximately are you from my station?	The approximate distance between our stations is ..... nautical miles (or ..... kilometers).
QRC	What company (or Government Administration) settles the accounts for your station?	The accounts for my station are settled by the ..... company (or by the Government Administration of .....).
QRD	Where are you bound and where are you from?	I am bound for ..... from .....
QRG	Will you tell me my exact frequency (wave-length) in kc/s (or m)?	Your exact frequency (wave-length) is ..... kc/s (or ..... m).
QRH	Does my frequency (wave-length) vary?	Your frequency (wave-length) varies.
QRI	Is my note good?	Your note varies.
QRJ	Do you receive me badly? Are my signals weak?	I cannot receive you. Your signals are too weak.
QRK	What is the legibility of my signals (1 to 5)?	The legibility of your signals is .... (1 to 5).
QRL	Are you busy?	I am busy (or I am busy with .....). Please do not interfere.
QRM	Are you being interfered with?	I am being interfered with.
QRN	Are you troubled by atmospherics?	I am troubled by atmospherics.
QRO	Shall I increase power?	Increase power.
QRP	Shall I decrease power?	Decrease power.
QRQ	Shall I send faster?	Send faster (..... words per minute).
QRS	Shall I send more slowly?	Send more slowly (..... words per minute).
QRT	Shall I stop sending?	Stop sending.
QRU	Have you anything for me?	I have nothing for you.
QRV	Are you ready?	I am ready.
QRW	Shall I tell ..... that you are calling him on ..... kc/s (or ..... m)?	Please tell ..... that I am calling him on ..... kc/s (or ..... m).
QRX	Shall I wait? When will you call me again?	Wait (or wait until I have finished communicating with .....) I will call you at ..... o'clock (or immediately).
QRY	What is my turn?	Your turn is No. ..... (or according to any other method of arranging it).
QRZ	Who is calling me?	You are being called by .....
QSA	What is the strength of my signals (1 to 5)?	The strength of your signals is ..... (1 to 5).
QSB	Does the strength of my signals vary?	The strength of your signals varies.
QSD	Is my keying correct; are my signals distinct?	Your keying is incorrect; your signals are bad.
QSG	Shall I send ..... telegrams (or one telegram) at a time?	Send ..... telegrams (or one telegram) at a time.
QSJ	What is the charge per word for ..... including your internal telegraph charge?	The charge per word for ..... is ..... francs including my internal telegraph charge.
QSK	Shall I continue with the transmission of all my traffic. I can hear you through my signals?	Continue with the transmission of all your traffic, I will interrupt you if necessary.
QSL	Can you give me acknowledgment of receipt?	I give you acknowledgment of receipt.
QSM	Shall I repeat the last telegram I sent you?	Repeat the last telegram you have sent me.
QSO	Can you communicate with ..... direct (or through the medium of .....)?	I can communicate with ..... direct (or through the medium of .....).
QSP	Will you retransmit to ..... free of charge?	I will retransmit to ..... free of charge.
QSR	Has the distress call received from ..... been cleared?	The distress call received from ..... has been cleared by .....
QSU	Shall I send (or reply) on ..... kc/s (or m) and/or on waves of Type A1, A2, A3, or B?	Send (or reply) on ..... kc/s (or ..... m) and/or on waves of Type A1, A2, A3, or B.
QSV	Shall I send a series of VVV .....?	Send a series of VVV .....
QSW	Will you send on ..... kc/s (or ..... m) and/or on waves of Type A1, A2, A3, or B?	I am going to send (or I will send) on ..... kc/s (or ..... m) and/or on waves of Type A1, A2, A3, or B.
QSX	Will you listen for ..... (call sign) on ..... kc/s (or ..... m)?	I am listening for ..... (call sign) on ..... kc/s (or ..... m).
QSY	Shall I change to transmission on ..... kc/s (or ..... m) without changing the type of wave? or Shall I change to transmission on another wave?	Change to transmission on ..... kc/s (or ..... m) without changing the type of wave or Change to transmission on another wave.
QSZ	Shall I send each word or group twice?	Send each word or group twice.
QTA	Shall I cancel telegram No. ..... as if it had not been sent?	Cancel telegram No. ..... as if it had not been sent.
QTB	Do you agree with my number of words?	I do not agree with your number of words; I will repeat the first letter of each word and the first figure of each number.
QTC	How many telegrams have you to send?	I have ..... telegrams for you (or for .....).

Abbreviation	*Question*	*Answer*
QTE	What is my true bearing in relation to you? or What is my true bearing in relation ..... (call sign)? What is the true bearing of ..... (call sign) in relation to ..... (call sign)?	Your true bearing in relation to me is .... degrees or Your true bearing in relation to ..... (call sign) is ..... degrees at ..... (time) or The true bearing of ..... (call sign) in relation to ..... (call sign) is ..... degrees at ..... (time).
QTF	Will you give me the position of my station according to the bearings taken by the direction-finding stations which you control?	The position of your station according to the bearings taken by the direction-finding stations which I control is ..... latitude ..... longitude.
QTG	Will you send your call sign for fifty seconds followed by a dash of ten seconds on ..... kc/s (or ..... m) in order that I may take your bearing?	I will send my call sign for fifty seconds followed by a dash of ten seconds on ..... kc/s (or ..... m) in order that you may take my bearing.
QTH	What is your position in latitude and longitude (or by any other way of showing it)?	My position is ..... latitude ..... longitude (or by any other way of showing it).
QTI	What is your true course?	My true course is ..... degrees.
QTJ	What is your speed?	My speed is ..... knots (or ..... kilometers) per hour.
QTM	Send radioelectric signals and submarine sound signals to enable me to fix my bearing and my distance.	I will send radioelectric signals and submarine sound signals to enable you to fix your bearing and your distance.
QTO	Have you left dock (or port)?	I have just left dock (or port).
QTP	Are you going to enter dock (or port)?	I am going to enter dock (or port).
QTQ	Can you communicate with my station by means of the International Code of Signals?	I am going to communicate with your station by means of the International Code of Signals.
QTR	What is the exact time?	The exact time is .....
QTU	What are the hours during which your station is open?	My station is open from ..... to .....
QUA	Have you news of ..... (call sign of the mobile station)?	Here is news of ..... (call sign of the mobile station).
QUB	Can you give me in this order, information concerning: visibility, height of clouds, ground wind for ..... (place of observation)?	Here is the information requested .....
QUC	What is the last message received by you from ..... (call sign of the mobile station)?	The last message received by me from ..... (call sign of the mobile station) is .....
QUD	Have you received the urgency signal sent by ..... (call sign of the mobile station)?	I have received the urgency signal sent by ..... (call sign of the mobile station) at .....(time).
QUF	Have you received the distress signal sent by ..... (call sign of the mobile station)?	I have received the distress signal sent by ..... (call sign of the mobile station) at ..... (time).
QUG	Are you being forced to alight in the sea (or to land)?	I am forced to alight (or land) at ..... (place).
QUH	Will you indicate the present barometric pressure at sea level?	The present barometric pressure at sea level is ..... (units).
QUJ	Will you indicate the true course for me to follow, with no wind, to make for you?	The true course for you to follow, with no wind, to make for me is ..... degrees at ..... (time).
QUK	Can you tell me the condition of the sea observed at ..... (place or coördinates)?	The sea at ..... (place or coördinates) is .....
QUL	Can you tell me the swell observed at ..... (place or coördinates)?	The swell at ..... (place or coördinates) is .....
QUM	Is the distress traffic ended?	The distress traffic is ended.

Special abbreviations adopted by the ARRL:

QST General call preceding a message addressed to all amateurs and ARRL Members. This is in effect "CQ ARRL."

QRR Official ARRL "land SOS." A distress call for use by stations in emergency zones only.

Scales Used in Expressing Signal Strength and Readability

(See QRK and QSA in the Q Code)

Strength		*Readability*	
QSA1	Barely perceptible.	**QRK1**	Unreadable.
QSA2	Weak.	**QRK2**	Readable now and then.
QSA3	Fairly good.	**QRK3**	Readable with difficulty.
QSA4	Good.	**QRK4**	Readable.
QSA5	Very good.	**QRK5**	Perfectly readable.

The Catalog Section

☆ ☆ ☆

In the following pages is a catalog-file of products of the principal manufacturers who serve the short-wave field. Appearance in these pages is by invitation—space has been sold only to those dependable firms whose established integrity and whose products have met with the approval of the American Radio Relay League.

INDEX OF MANUFACTURERS

★ CATALOG SECTION ★

The Radio Amateur's Handbook

	Page
Abbott Instrument, Inc.	104
Aerovox Corporation	45
Aladdin Radio Industries, Inc.	61
Allied Radio	153
American Phenolic Corporation	128
American Radio Hardware Co., Inc.	140
American Radio Relay League, Inc.	165–172
Amperex Electric Products	146, 147
Astatic Corporation, The	122
Audel & Company, Theo.	144
Ayers Automatic Code Machines Co., Inc.	102, 103
Barker & Williamson	107
Bliley Electric Company	52, 53
Brach Manufacturing Co., L. S.	106
Browning Laboratories, Inc.	82
Burgess Battery Co.	86
Candler System Co.	133
Cardwell Manufacturing Co., Allen D.	46, 47
Centralab Laboratory	70, 71
Cinaudagraph Speakers, Inc.	143
Clarostat Mfg. Co., Inc.	141
Communication Products Co.	62, 63
Cornell-Dubilier	100, 101
Corning Glass Works	49
DeJure Amsco Corporation	121
Deutschmann Corporation, Tobe	134
Dumont Electric Co.	124
DX Crystal Company	132
Echophone Radio Co.	66, 67
Eitel-McCullough, Inc.	98, 99
Electric Soldering Iron Co., Inc.	112
Electro-Voice Mfg. Co.	149
Electronic Corp. of America	123
Electronic Mechanics, Inc.	127
Espey Manufacturing Co.	162
General Electric Company	57–60
General Electronics, Inc.	119
Gould-Moody Co.	156
Hallicrafters Company, The	37–44
Hammarlund Manufacturing Co.	54, 55
Harrison Radio Company	118
Harvey Radio Company	125
Harvey-Wells Communications, Inc.	68, 69
Heintz & Kaufman Co.	48
Henry Manufacturing Company	111
Hewlett-Packard Co.	79
Howard Radio Co.	109
Hytron Corporation	138, 139
Instructograph Company, The	110
International Resistance Co.	78
Jefferson-Travis Radio Mfg. Co.	116
Johnson Company, E. F.	84, 85
Kato Engineering Co.	150, 151
Knights, James, Co.	126
Lafayette Radio Corp.	159
Link, Fred M.	87
Meck, John, Industries	120
McElroy Manufacturing Corp.	21–36
Merit Coil & Transformer Corp.	154
Micro-Switch Corporation	97
Millen Manufacturing Co., James, Inc.	50, 51
Mobile Refrigeration Corp.	161
National Company	3–20
National Union Radio Corp.	114
Newark Electric Co.	135
Ohmite Manufacturing Co.	130, 131
Par-Metal Products Corp.	76
Premax Products	115
RCA Manufacturing Company, Inc.	72, 73
Radio Manufacturing Engineers Co.	74, 75
Radio Shack, The	105
Raytheon Production Corp.	90
Scientific Radio Products Co.	117
Shure Brothers Co.	80
Sickles Co., F. W.	136
Sigma Instruments, Inc.	96
Solar Manufacturing Co.	152
Sprague Specialties Co.	81, 95
Standard Transformer Co.	91
Struthers-Dunn, Inc.	129
Stupakoff Ceramic & Mfg. Co.	92
Sun Radio & Electronics Co.	113
Superior Electric Co.	94
Sylvania Electric Prod. Co., Inc.	56
Teleplex Company	148
Terminal Radio Corp.	93
Thermador Electrical Mfg. Co.	142
Transmitter Equipment Mfg. Co.	88
Trimm, Inc.	77
Triplett Elec. Instr. Co.	145
United Electronics	83
United Transformer Co.	64, 65
Universal Microphone Co.	157
Valpey Crystal Corp.	158
Vibroplex Co.	155
Wallace Manufacturing Co., Wm. T.	89
Wholesale Radio Laboratories	108
Wilcox Electric Company	137
Wiley, John, Co.	163

NATIONAL RADIO PRODUCTS 1944



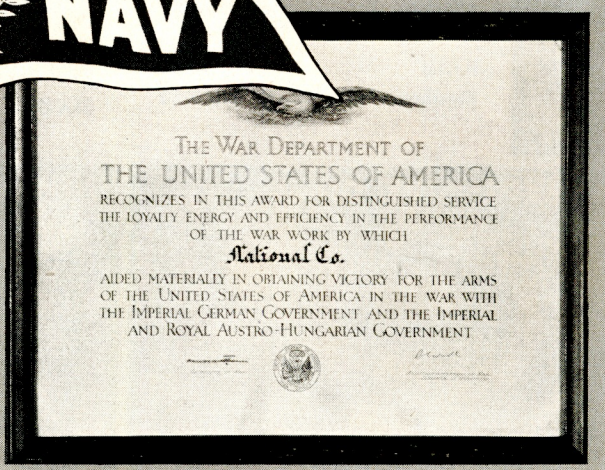

THE WAR DEPARTMENT OF
THE UNITED STATES OF AMERICA
RECOGNIZES IN THIS AWARD FOR DISTINGUISHED SERVICE
THE LOYALTY ENERGY AND EFFICIENCY IN THE PERFORMANCE
OF THE WAR WORK BY WHICH
National Co.
AIDED MATERIALLY IN OBTAINING VICTORY FOR THE ARMS
OF THE UNITED STATES OF AMERICA IN THE WAR WITH
THE IMPERIAL GERMAN GOVERNMENT AND THE IMPERIAL
AND ROYAL AUSTRO-HUNGARIAN GOVERNMENT

1918-1943

The men and women of National Company take great pride in the reception of the Army-Navy "E" Award for excellence in production. To us it brings a special satisfaction, for twenty-five years ago we received a similar award for service to the Nation in World War I. Old timers have set the pace in winning both awards, but new members have brought eager hands to join with old skills to supply our boys with the tools of Victory. We are grateful to the armed forces for the confidence they have placed in us. We will not fail them.

NATIONAL COMPANY, INC.
MALDEN, MASS.

NATIONAL DIALS

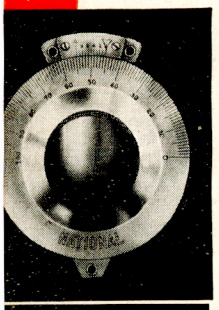

The four-inch N Dial has an engine divided scale and vernier. The vernier is flush with the scale. The planetary drive has a ratio of 5 to 1, and is contained within the body of the dial. 2, 3, 4 or 5 scale. Fits ¼" shaft. **Specify scale.**

N Dial **List $7.50**

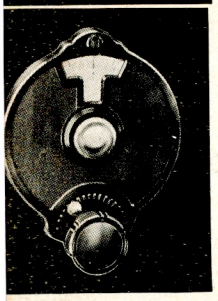

"Velvet Vernier" Dial, Type B, has a compact variable ratio 6 to 1 minimum, 20 to 1 maximum drive that is smooth and trouble free. An illuminator is available. The case is black bakelite. 1 or 5 scale. 4" diam. Fits ¼" shaft. **Specify scale.**

B Dial **List $3.00**

Illuminator, extra **List $.55**

The original black bakelite "Velvet Vernier" Dial, Type A, is still an unchallenged favorite for general purpose use. The planetary drive has a ratio of 5 to 1. In 4 inch diameter with 2, 4 or 5 scale, and in 3⅜ inch diameter with 2 scale. Fits ¼" shaft. **Specify scale.**

A Dial **List $3.30**

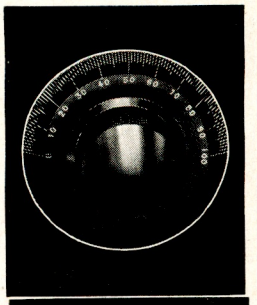

The BM Dial is a smaller version of the B Dial (described in the opposite column) for use where space is limited. The drive ratio is fixed. Although small in size, the BM Dial has the same smooth action as the larger units. 1 or 5 scale. 3" diam. Fits ¼" shaft. **Specify scale.**

BM Dial **List $2.75**

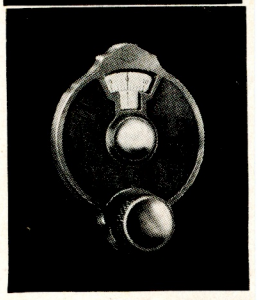

INEXPENSIVE DIALS

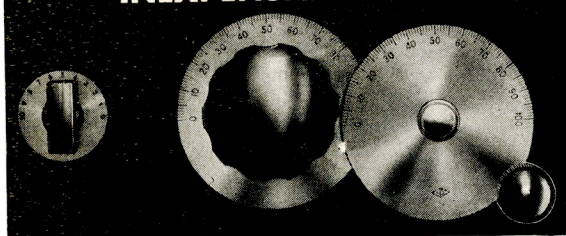

TYPE R
List $.85
1⅝" Dia.
Etched Nickel Silver

TYPE O
List $1.65
3½" Dia.

TYPE K
List $1.65
3½" Dia.

TYPE L
List $2.75
5" Dia.

TYPE M
List $2.75
5" Dia.

NEW! FOR INDIVIDUAL CALIBRATING

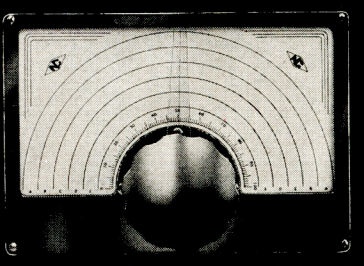

For experimenters who "build their own" and desire direct calibration. Fine for Freq. Monitors and ECO's.

- **Dial bezel size 5" x 7¼"**
- **Five blank scales for direct calibration**
- **Employs Velvet Vernier Drive**
- **Easy to mount**

TYPE ACN List $5.00

R Dial scale 3 only but marked 10-0; O, K, L, M scale 2. All fit ¼" shafts.

KNOBS

HRK (Fits ¼" shaft) **List $.95**
Black bakelite knob 2⅜" diam.

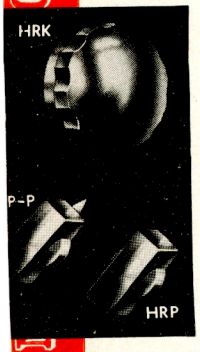

HRP-P (Fits ¼" shaft) **List $.40**
Black bakelite knob 1¼" long and ½" wide. Equipped with pointer.

HRP **List $.30**
The Type HRP knob has no pointer, but is otherwise the same as the knob above.

ACCESSORIES

ODL **List $.55**
A locking device which clamps the rim of O, K, L and M Dials. Brass, nickel plated.

ODD **List $.70**
Vernier drive for O, K, L, M or other plain dials.

SB (Fits ¼" shaft) **List $.30**
A nickel plated brass bushing ½" dia.

RSL (Fits ¼" shaft) **List $.95**
Rotor Shaft Lock for TMA, TMC and similar condensers.

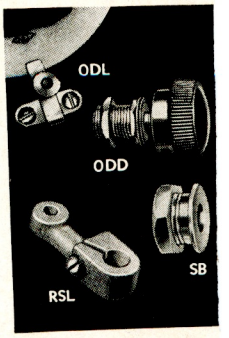

DIAL SCALES

Scale	Divisions	Rotation	Direction of Condenser Rotation for increase of dial reading
1	0-100-0	180°	Either
2	0-100	180°	Counter Clockwise
3	100-0	180°	Clockwise
4	150-0	270°	Clockwise
5	200-0	360°	Clockwise
6	0-150	270°	Counter Clockwise

All prices subject to change without notice

NATIONAL PRECISION CONDENSERS

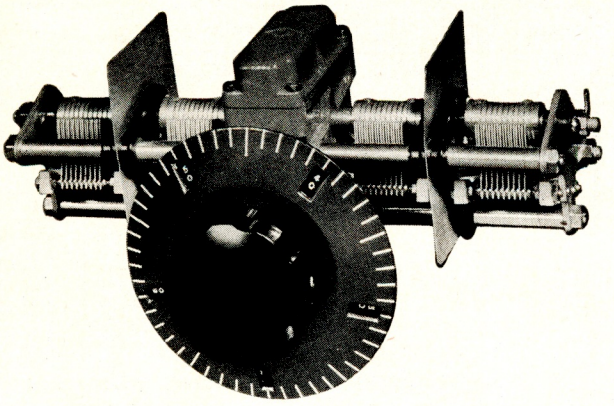

The Micrometer dial reads direct to one part in 500. Division lines are approximately ¼" apart. The dial revolves ten times in covering the tuning range, and the numbers visible through the small windows change every revolution to give consecutive numbering by tens from 0 to 500. The condenser is of extremely rigid construction, with four bearings on the rotor shaft. The drive, at the mid-point of the rotor, is through an enclosed preloaded worm gear with 20 to 1 ratio. Each rotor is individually insulated from the frame, and each has its own individual rotor contact. Stator insulation is Steatite. Plate shape is straight-line-frequency when the frequency range is 2:1.

PW Condensers are available in 2, 3 or 4 sections, in either 160 or 225 mmf per section. Larger capacities cannot be supplied.

A single-section PW condenser with grounded rotor is supplied in capacities of 150, 200, 350 and 500 mmf, single spaced, and capacities up to 125 mmf, double spaced.

PW condensers are all with rotor shaft parallel to the panel.

PW-1R	Single section right	**List $16.50**
PW-1L	Single section left	**List $16.50**
PW-2R	Double section right	**List $22.00**
PW-2L	Double section left	**List $22.00**
PW-2S	Single section each side	**List $22.00**
PW-3R	Double section right; single left	**List $26.50**
PW-3L	Double section left; single right	**List $26.50**
PW-4	Double section each side	**List $30.00**
PW-DO	Dial and knob only	**List $ 7.25**

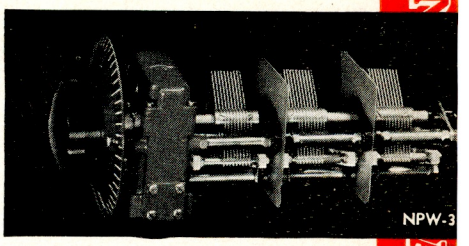

NPW MODELS

With micrometer dial

NPW-3. Three sections, each 225 mmf. **List $26.50**

NPW-X. Three sections, each 25 mmf. **List $22.50**

Both condensers are similar to PW models, except that rotor shaft is perpendicular to panel.

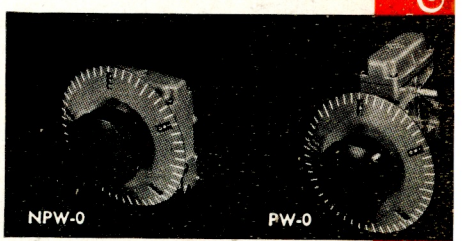

GEAR DRIVE UNITS

With micrometer dial

NPW-O **List $12.00**

Uses parts similar to the NPW condenser. Drive shaft perpendicular to panel. One TX-9 coupling supplied.

PW-O **List $15.00**

Uses parts similar to the PW condenser. Drive shaft parallel to panel. Two TX-9 couplings supplied.

NATIONAL GENERAL PURPOSE CONDENSERS

National EMC Condensers are made in large sizes for general purpose uses. They are similar in construction to the TMC Transmitting condenser, and have high efficiency and rugged frames. Insulation is Isolantite, and Peak Voltage Rating is 1000 Volts. Plate shape is Straight-Line Wavelength.

Capacity	Minimum Capacity	No. of Plates	Length	Catalog Symbol	List
150 Mmf.	9	9	4"	EMC-150	$4.50
250	11	15	2 15/16"	EMC-250	5.50
350	12	20	2 15/16"	EMC-350	6.75
500	16	29	4 3/8"	EMC-500	8.50
1000	22	56	6 3/4"	EMC-1000	12.50
SPLIT-STATOR MODEL					
350–350	12–12	20–20	6"	EMCD-350	$13.00

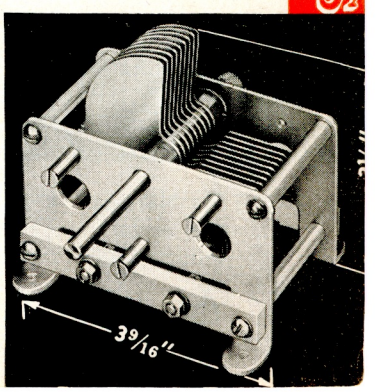

All prices subject to change without notice

NATIONAL RECEIVING CONDENSERS

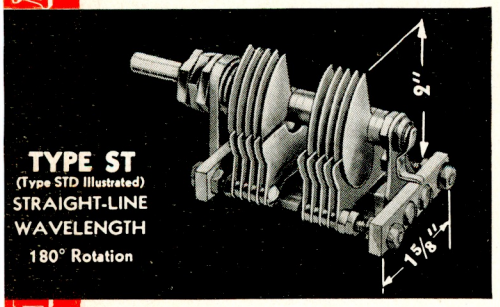

TYPE ST
(Type STD Illustrated)
STRAIGHT-LINE
WAVELENGTH
180° Rotation

Capacity	Minimum Capacity	No. of Plates	Air Gap	Length	Catalog Symbol	List
SINGLE BEARING MODELS						
15 Mmf.	3 Mmf.	3	.018"	1 3/16"	STHS- 15	$1.50
25	3.25	4	.018"	1 3/16"	STHS- 25	1.65
50	3.5	7	.018"	1 3/16"	STHS- 50	1.75
DOUBLE BEARING MODELS						
35 Mmf.	6 Mmf.	8	.026"	2 1/4"	ST- 35	$1.65
50	7	11	.026"	2 1/4"	ST- 50	2.00
75	8	15	.026"	2 1/4"	ST- 75	2.25
100	9	20	.026"	2 1/4"	ST-100	2.50
140	10	27	.026"	2 3/4"	ST-140	2.75
150	10.5	29	.026"	2 3/4"	ST-150	2.75
200	12.0	27	.018"	2 1/4"	STH-200	3.00
250	13.5	32	.018"	2 3/4"	STH-250	3.30
300	15.0	39	.018"	2 3/4"	STH-300	3.50
335	17.0	43	.018"	2 3/4"	STH-335	4.00
SPLIT STATOR DOUBLE BEARING MODELS						
50–50	5–5	11–11	.026"	2 3/4"	STD- 50	$4.00
100–100	5.5–5.5	14–14	.018"	2 3/4"	STHD-100	5.00

NOTE — Type SS Condensers, having straight-line-capacity plates but otherwise similar to the Type ST, are available. Capacities and Prices same as Type ST.

The ST Type condenser has Straight-Line Wavelength plates. All double-bearing models have the front bearing insulated to prevent noise. On special order a shaft extension at each end is available, for ganging. On double-bearing single shaft models, the rotor contact is through a constant impedance pigtail. Isolantite insulation.

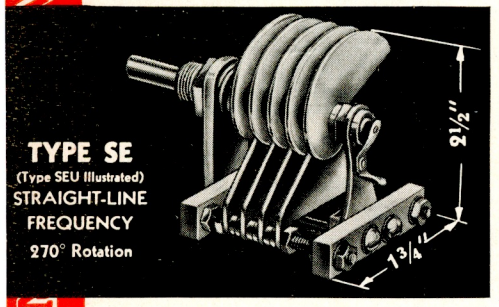

TYPE SE
(Type SEU Illustrated)
STRAIGHT-LINE
FREQUENCY
270° Rotation

Capacity	Minimum Capacity	No. of Plates	Air Gap	Length	Catalog Symbol	List
15 Mmf.	7 Mmf.	6	.055"	2 1/4"	SEU- 15	$2.75
20	7.5	8	.055"	2 1/4"	SEU- 20	3.00
25	8	9	.055"	2 1/4"	SEU- 25	3.00
50	9	11	.026"	2 1/4"	SE- 50	2.50
75	10	15	.026"	2 1/4"	SE- 75	2.75
100	11.5	20	.026"	2 1/4"	SE-100	3.00
150	13	29	.026"	2 3/4"	SE-150	3.25
200	12	27	.018"	2 1/4"	SEH-200	3.25
250	14	32	.018"	2 3/4"	SEH-250	3.50
300	16	39	.018"	2 3/4"	SEH-300	3.50
335	17	43	.018"	2 3/4"	SEH-335	3.85

TYPE SE — All models have two rotor bearings, the front bearing being insulated to prevent noise. A shaft extension at each end, for ganging, is available on special order. On models with single shaft extension, the rotor contact is through a constant impedance pigtail. The SEU models (illustrated) are suitable for high voltages as their plates are thick polished aluminum with rounded edges. Other SE condensers do not have polished edges on the plates. Isolantite insulation.

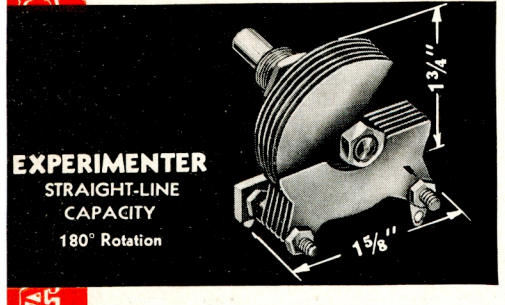

EXPERIMENTER
STRAIGHT-LINE
CAPACITY
180° Rotation

Capacity	Minimum Capacity	Length	Air Gap	No. of Plates	Catalog Symbol	List
15 Mmf.	3.5	1 5/16"	.045"	5	EX- 15	$ .95
25	3.75	1 5/16"	.045"	7	EX- 25	.95
35	3.75	1 5/16"	.045"	10	EX- 35	1.10
50	4	1 5/16"	.017"	6	EX- 50	1.00
100	4.75	1 5/16"	.017"	12	EX-100	1.10
140	5.5	1 5/16"	.017"	15	EX-140	1.40

The National "Experimenter" Type Condensers are low-priced models for general experimental work. They are of all-brass construction. The rotor has only one bearing. Plates can be removed without difficulty. Bakelite insulation.

All prices subject to change without notice

NATIONAL MINIATURE CONDENSERS

USR — *See table* — Type USR condensers are small, compact, low-loss units. Their soldered construction makes them particularly suitable for applications where vibration is present. Adjustment is made with a screw driver. Steatite base.

USE — *See table* — Type USE condensers are similar to Type USR, but are provided with a ¼" diameter shaft extension at each end.

USL — *See table* — Type USL condensers are similar to Type USR, but are provided with a rotor shaft lock, so that the rotor can be clamped at any setting.

MSR, MSE, MSL — *See table* — Condensers of the MS series are similar in appearance to the US series described above, but they differ in making use of plates which are the same as those of the UM condenser. This and other small changes results in a more robust and rigid assembly. Other details of the MSR, MSE, and MSL are the same as the USR, USE, and USL respectively.

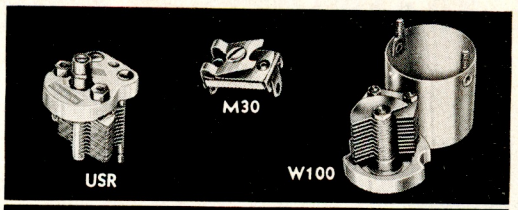

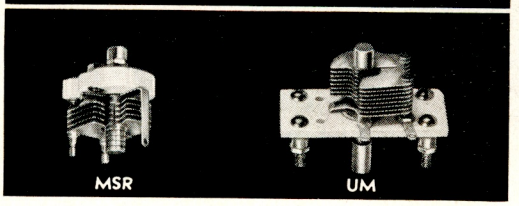

Capacity	Catalog Symbol			List
25 mmf.	USR-25	USE-25	USL-25	$1.45
50	USR-50	USE-50	USL-50	1.65
75	USR-75	USE-75	USL-75	1.90
100	USR-100	USE-100	USL-100	2.10
140	USR-140	USE-140	USL-140	2.50

Capacity	Catalog Symbol			List
25 mmf.	MSR-25	MSE-25	MSL-25	$1.45
50	MSR-50	MSE-50	MSL-50	1.65
75	MSR-75	MSE-75	MSL-75	1.90
100	MSR-100	MSE-100	MSL-100	2.10

Capacity	Minimum Capacity	No. of Plates	Air Gap	Catalog Symbol	List
15 mmf.	1.5	6	.017"	UM-15	$1.40
35	2.5	12	.017"	UM-35	1.65
50	3	16	.017"	UM-50	1.75
75	3.5	22	.017"	UM-75	1.90
100	4.5	28	.017"	UM-100	2.10
25	3.4	14	.042"	UMA-25	2.00
BALANCED STATOR MODEL					
25	2	4-4-4	.017"	UMB-25	$2.00

M-30 **List $.35**

Type M-30 is a small adjustable mica condenser with a maximum capacity of 30 mmf. Dimensions $1\frac{3}{16}$" x $\frac{9}{16}$" x ½". Isolantite base.

W-75, 75 mmf. **List $2.50**
W-100, 100 mmf. **List $2.75**

Small padding condensers having very low temperature coefficient. Mounted in an aluminum shield 1¼" in diameter.

The **UM CONDENSER** is designed for ultra high frequency use and is small enough for convenient mounting in PB-10 and RO shield cans. They are particularly useful for tuning receivers, transmitters, and exciters. Shaft extensions at each end of the rotor permit easy ganging when used with one of our flexible couplings. The UMB-25 Condenser is a balanced stator model, two stators act on a single rotor. The UM can be mounted by the angle foot supplied or by bolts and spacers. See table for sizes.

Dimensions: Base 1" x 2¼", Mounting holes ⅝" x $1\frac{23}{32}$", Axial length 2⅛" overall.

Plates: Straight line capacity, 180° rotation.

NATIONAL NEUTRALIZING CONDENSERS

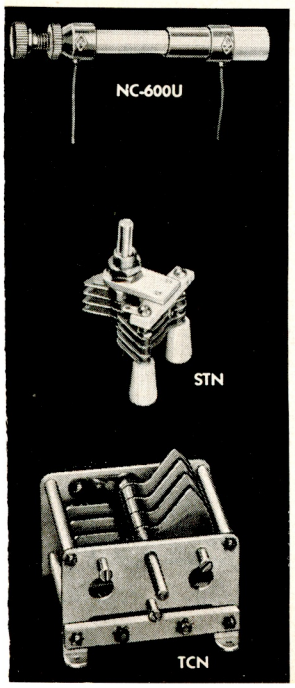

NC-600U **List $.60**
With standoff insulator

NC-600 **List $.50**
Without insulator

For neutralizing low power beam tubes requiring from .5 to 4 mmf, and 1500 max. total volts such as the 6L6. The NC-600U is supplied with a GS-10 standoff insulator screwed on one end, which may be removed for pigtail mounting.

STN **List $2.00**

The Type STN has a maximum capacity of 18 mmf (3000 V), making it suitable for such tubes as the 10 and 45. It is supplied with two standoff insulators.

TCN **List $4.00**

The Type TCN is similar to the TMC. It has a maximum capacity of 25 mmf (6000 V), making it suitable for the 203A, 211 and similar tubes.

NC-800 **List $3.00**

The NC-800 disk-type neutralizing condenser is suitable for the RCA-800, 35T, HK-54 and similar tubes. It is equipped with a micrometer thimble and clamp. The chart below gives capacity and air gap for different settings.

NC-75 **List $4.50**

For 75T, 808, 811, 812 & similar tubes.

NC-150 **List $7.25**

For HK354, RK36, 300T, 852, etc.

NC-500 **List $13.75**

For WE-251, 450TH, 450TL, 750TL, etc.

These larger disk type neutralizing condensers are for the higher powered tubes. Disks are aluminum, insulation steatite.

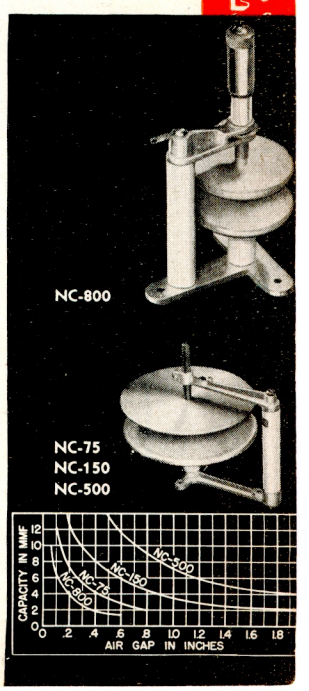

All prices subject to change without notice

NATIONAL COMPANY, INC., MAL

NATIONAL TRANSMITTING CONDENSERS

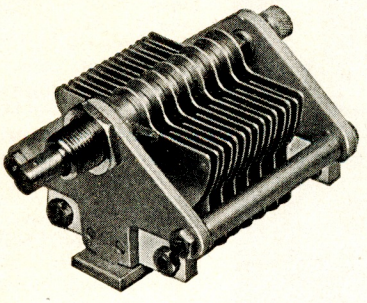

TYPE TMS

is a condenser designed for transmitter use in low power stages. It is compact, rigid, and dependable. Provision has been made for mounting either on the panel, on the chassis, or on two stand-off insulators. Insulation is Isolantite. Voltage ratings listed are conservative.

Capacity	Minimum Capacity	Length	Air Gap	Peak Voltage	No. of Plates	Catalog Symbol	List Price
SINGLE STATOR MODELS							
100 Mmf.	9.5	3″	.026″	1000v.	9	**TMS-100**	**$2.75**
150	11	3″	.026″	1000v.	14	**TMS-150**	**3.00**
250	13.5	3″	.026″	1000v.	22	**TMS-250**	**3.30**
300	15	3″	.026″	1000v.	27	**TMS-300**	**4.00**
35	8	3″	.065″	2000v.	7	**TMSA-35**	**3.30**
50	11	3″	.065″	2000v.	11	**TMSA-50**	**3.60**
DOUBLE STATOR MODELS							
50–50 Mmf.	6–6	3″	.026″	1000v.	5–5	**TMS-50D**	**$4.25**
100–100	7–7	3″	.026″	1000v.	9–9	**TMS-100D**	**5.00**
50–50	10.5–10.5	3″	.065″	2000v.	11–11	**TMSA-50D**	**4.40**

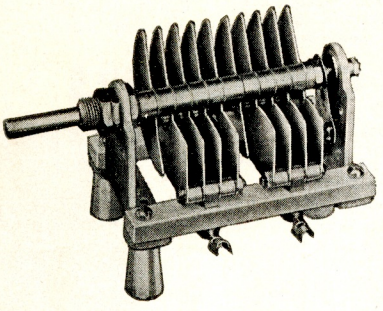

TYPE TMH

features very compact construction, excellent power factor, and aluminum plates .040″ thick with polished edges. It mounts on the panel or on removable stand-off insulators. Isolantite insulators have long leakage path. Stand-offs included in listed price.

Capacity	Minimum Capacity	Length	Air Gap	Peak Voltage	No. of Plates	Catalog Symbol	List
SINGLE STATOR MODELS							
50 Mmf.	9	3¾″	.085″	3500v.	15	**TMH-50**	**$3.85**
75	11	3¾″	.085″	3500v.	19	**TMH-75**	**4.40**
100	12.5	5⅛″	.085″	3500v.	25	**TMH-100**	**5.25**
150	18	6½″	.085″	3500v.	37	**TMH-150**	**6.60**
35	11	5⅛″	.180″	6500v.	17	**TMH-35A**	**5.75**
DOUBLE STATOR MODELS							
35–35 Mmf.	6–6	3¾″	.085″	3500v.	9–9	**TMH-35D**	**$6.00**
50–50	8–8	5⅛″	.085″	3500v.	13–13	**TMH-50D**	**6.60**
75–75	11–11	6½″	.085″	3500v.	19–19	**TMH-75D**	**8.00**

All prices subject to change without notice

NATIONAL TRANSMITTING CONDENSERS

TYPE TMK

is a new condenser for exciters and low power transmitters. Special provision has been made for mounting AR-16 coils in a swivel plug-in mount on either the top or rear of the condenser, (see page 10). For panel or stand-off mounting. Isolantite insulation.

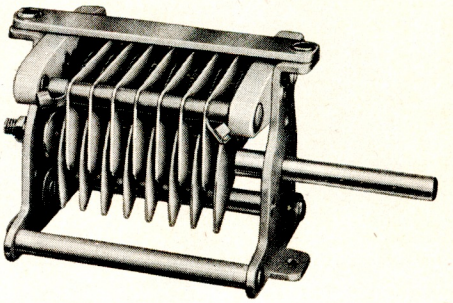

Capacity	Minimum Capacity	Length	Air Gap	Peak Voltage	No. of Plates	Catalog Symbol	List Price
SINGLE STATOR MODELS							
35 Mmf.	7.5	2 7/32"	.047"	1500v.	7	TMK-35	$3.60
50	8	2 3/8"	.047"	1500v.	9	TMK-50	3.85
75	9	2 11/16"	.047"	1500v.	13	TMK-75	4.15
100	10	3"	.047"	1500v.	17	TMK-100	4.40
150	10.5	3 5/8"	.047"	1500v.	25	TMK-150	5.00
200	11	4 1/4"	.047"	1500v.	33	TMK-200	5.50
250	11.5	4 7/8"	.047"	1500v.	41	TMK-250	6.00
DOUBLE STATOR MODELS							
35–35 Mmf.	7.5–7.5	3"	.047"	1500v.	7–7	TMK-35D	$5.75
50–50	8–8	3 5/8"	.047"	1500v.	9–9	TMK-50D	6.50
100–100	10–10	4 1/4"	.047"	1500v.	17–17	TMK-100D	8.00
Swivel Mounting Hardware for AR 16 Coils						SMH	$ .15

TYPE TMC

is designed for use in the power stages of transmitters where peak voltages do not exceed 3000. The frame is extremely rigid and arranged for mounting on panel, chassis or stand-off insulators. The plates are aluminum with buffed edges. Insulation is Isolantite. The stator in the split stator models is supported at both ends.

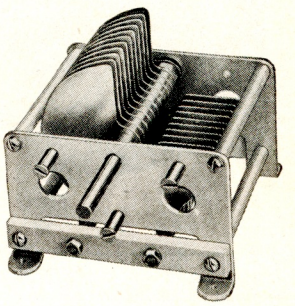

Capacity	Minimum Capacity	Length	Air Gap	Peak Voltage	No. of Plates	Catalog Symbol	List Price
SINGLE STATOR MODELS							
50 Mmf.	10	3"	.077"	3000v.	7	TMC-50	$4.40
100	13	3 1/2"	.077"	3000v.	13	TMC-100	5.00
150	17	4 5/8"	.077"	3000v.	21	TMC-150	5.75
250	23	6"	.077"	3000v.	32	TMC-250	6.60
300	25	6 3/4"	.077"	3000v.	39	TMC-300	7.25
DOUBLE STATOR MODELS							
50–50 Mmf.	9–9	4 5/8"	.077"	3000v.	7–7	TMC-50D	$7.25
100–100	11–11	6 3/4"	.077"	3000v.	13–13	TMC-100D	8.25
200–200	18.5–18.5	9 1/4"	.077"	3000v.	25–25	TMC-200D	11.00

All prices subject to change without notice

NATIONAL COMPANY, INC., MALDEN, MASS., U.S.A.

NATIONAL TRANSMITTING CONDENSERS

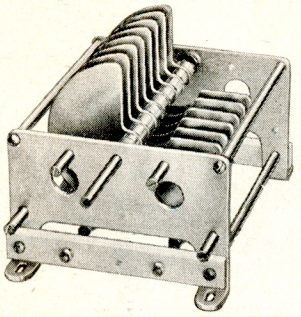

TYPE TMA

is a larger model of the popular TMC. The frame is extremely rigid and arranged for mounting on panel, chassis or stand-off insulators. The plates are of heavy aluminum with rounded and buffed edges. Insulation is Isolantite, located outside of the concentrated field.

Capacity	Minimum Capacity	Length	Air Gap	Peak Voltage	No. of Plates	Catalog Symbol	List Price
SINGLE STATOR MODELS							
300 Mmf.	19.5	4 9/16"	.077"	3000v.	23	TMA-300	$12.00
50	15	4 9/16"	.171"	6000v.	7	TMA-50A	6.50
100	19.5	6 7/8"	.171"	6000v.	15	TMA-100A	10.00
150	22.5	6 7/8"	.171"	6000v.	21	TMA-150A	12.00
230	33	9 5/16"	.171"	6000v.	33	TMA-230A	16.00
100	30	9 1/4"	.265"	9000v.	23	TMA-100B	13.50
150	40.5	12 1/2"	.265"	9000v.	33	TMA-150B	17.00
50	21	7 1/8"	.359"	12000v.	13	TMA-50C	8.00
100	37.5	12 7/8"	.359"	12000v.	25	TMA-100C	14.50
DOUBLE STATOR MODELS							
200-200 Mmf.	15-15	6 7/8"	.077"	3000v.	16-16	TMA-200D	$15.00
50-50	12.5-12.5	6 7/8"	.171"	6000v.	8-8	TMA-50DA	11.00
100-100	17-17	9 5/16"	.171"	6000v.	14-14	TMA-100DA	17.50
60-60	19.5-19.5	12 1/2"	.265"	9000v.	15-15	TMA-60DB	18.50
40-40	18-18	12 7/8"	.359"	12000v.	11-11	TMA-40DC	13.50

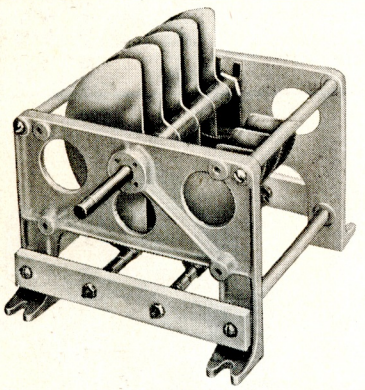

TYPE TML

condenser is a 1 KW job throughout. Isolantite insulators, specially treated against moisture absorption, prevent flashovers. A large self-cleaning rotor contact provides high current capacity. Thick capacitor plates, with accurately rounded and polished edges, provide high voltage ratings. Sturdy cast aluminum end frames and dural tie bars permit an unusually rigid structure. Precision end bearings insure smooth turning and permanent alignment of the rotor. End frames are arranged for panel, chassis or stand-off mountings.

Capacity	Minimum Capacity	Length	Air Gap	Peak Voltage	No. of Plates	Catalog Symbol	List Price
SINGLE STATOR MODELS							
75 Mmf.	25	18 1/16"	.719"	20,000v.	17	TML-75E	$28.75
150	60	18 1/16"	.469"	15,000v.	27	TML-150D	29.00
100	45	13 5/8"	.469"	15,000v.	19	TML-100D	26.00
50	22	8 5/16"	.469"	15,000v.	9	TML-50D	18.00
245	54	18 1/16"	.344"	10,000v.	35	TML-245B+	31.50
150	45	13 5/8"	.344"	10,000v.	21	TML-150B+	28.75
100	32	10 15/16"	.344"	10,000v.	15	TML-100B+	27.50
75	23.5	8 5/16"	.344"	10,000v.	11	TML-75B+	20.00
500	55	18 1/16"	.219"	7,500v.	49	TML-500A+	38.50
350	45	13 5/8"	.219"	7,500v.	33	TML-350A+	30.75
250	35	10 15/16"	.219"	7,500v.	25	TML-250A+	28.75
DOUBLE STATOR MODELS							
30-30 Mmf.	12-12	18 1/16"	.719"	20,000v.	7-7	TML-30DE	$29.00
60-60	26-26	18 1/16"	.469"	15,000v.	11-11	TML-60DD	31.50
100-100	27-27	18 1/16"	.344"	10,000v.	15-15	TML-100DB+	35.00
60-60	20-20	13 5/8"	.344"	10,000v.	9-9	TML-60DB+	30.00
200-200	30-30	18 1/16"	.219"	7,500v.	21-21	TML-200DA+	38.50
100-100	17-17	10 15/16"	.219"	7,500v.	11-11	TML-100DA+	31.50

All prices subject to change without notice

NATIONAL RF CHOKES

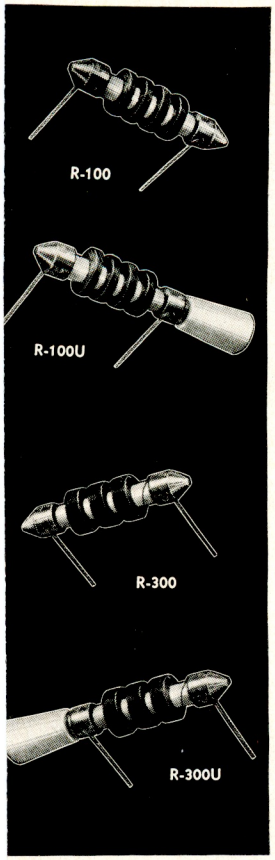

R-100 **List $.50**
Without standoff insulator

R-100U **List $.60**
With standoff insulator

R.F. chokes R-100 and R-100U are identical electrically, but the latter is provided with a removable standoff insulator screwed on one end. Both have Isolantite insulation and both have a continuous universal winding in four sections. Inductance 2½ m.h.; distributed capacity 1 mmf.; DC resistance 50 ohms; current rating 125 ma.

R-300 **List $.50**
Without insulator

R-300U **List $.60**
With insulator

R.F. chokes R-300 and R-300U are similar in size to R-100U but have higher current capacity. The R-300U is provided with a removable standoff insulator screwed on one end. Inductance 1 m.h.; distributed capacity 1 mmf.; DC resistance 10 ohms; current rating 300 ma.

R-152 **List $2.50**

For the 80 and 160 meter bands. Inductance 4 m.h., DC resistance 10 ohms, DC current 600 ma. Coils honeycomb wound on Isolantite core.

R-154 **List $2.50**
R-154U **List $2.00**

For the 20, 40 and 80 meter bands. Inductance 1 m.h., DC resistance 6 ohms, DC current 600 ma. Coils honeycomb wound on Isolantite core. The R-154U does not have the third mounting foot and the small insulator, but is otherwise the same as R-154. See illustration.

R-175 **List $3.00**

The R-175 Choke is suitable for parallel-feed as well as series-feed in transmitters with plate supply up to 3000 volts modulated or 4000 volts unmodulated. Unlike conventional chokes, the reactance of the R-175 is high throughout the 10 and 20 meter bands as well as the 40, 80 and 160 meter bands. Inductance 225 μh, distributed capacity 0.6 mmf., DC resistance 6 ohms, DC current 800 ma., voltage breakdown to base 12,500 volts.

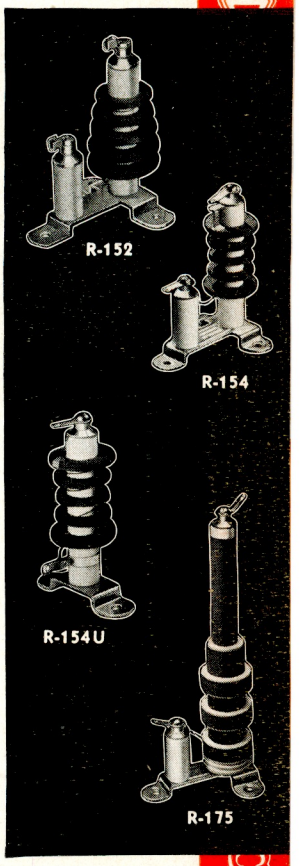

NATIONAL SHAFT COUPLINGS

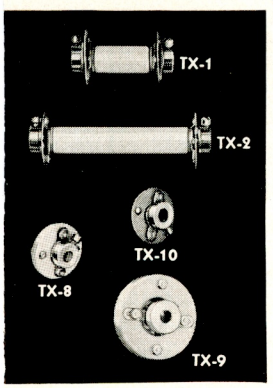

TX-1, Leakage path 1"
List $1.10
TX-2, Leakage path 2½"
List $1.25
Flexible couplings with glazed Isolantite insulation which fit ¼" shafts.

TX-8 **List $.85**
A non-flexible rigid coupling with Isolantite insulation. 1" diam. Fits ¼" shaft.

TX-9 **List $1.25**
This small insulated flexible coupling provides high electrical efficiency when used to isolate circuits. Insulation is Steatite. 1⅝" diam. Fits ¼" shaft.

TX-10 **List $.60**
A very compact insulated coupling free from backlash. Insulation is canvas Bakelite. 1 1/16" diam. Fits ¼" shaft.

TX-11 **List $.70**
The flexible shaft of this coupling connects shafts at angles up to 90 degrees, and eliminates misalignment problems. Fits ¼" shafts. Length 4¼".

TX-12, Length 4⅝" **List $1.40**
TX-13, Length 7⅛" **List $1.65**
These couplings use flexible shafting like the TX-11 above, but are also provided with Isolantite insulators at each end.

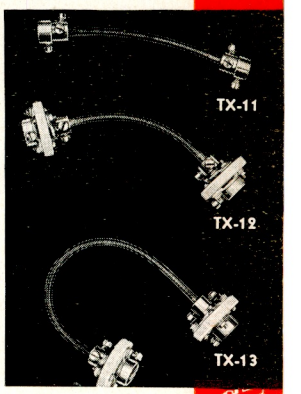

All prices subject to change without notice

NATIONAL POWER SUPPLIES

National Power Supplies are specially designed for high frequency receivers, and include efficient filters for RF disturbances as well as for hum frequencies. The various types for operation from an AC line are listed under the receivers with which they are used.

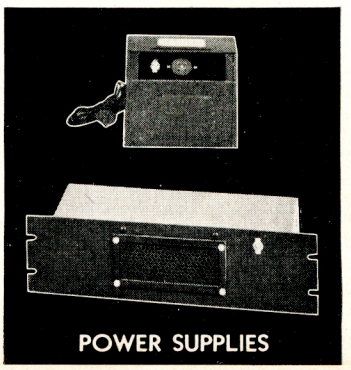

High voltage power supplies can be supplied for National Receivers for operation from batteries. These units are of the vibrator type.

686, Table model, (165 V., 50 MA.) for operation from 6.3 volts DC, with vibrator.
List $49.50

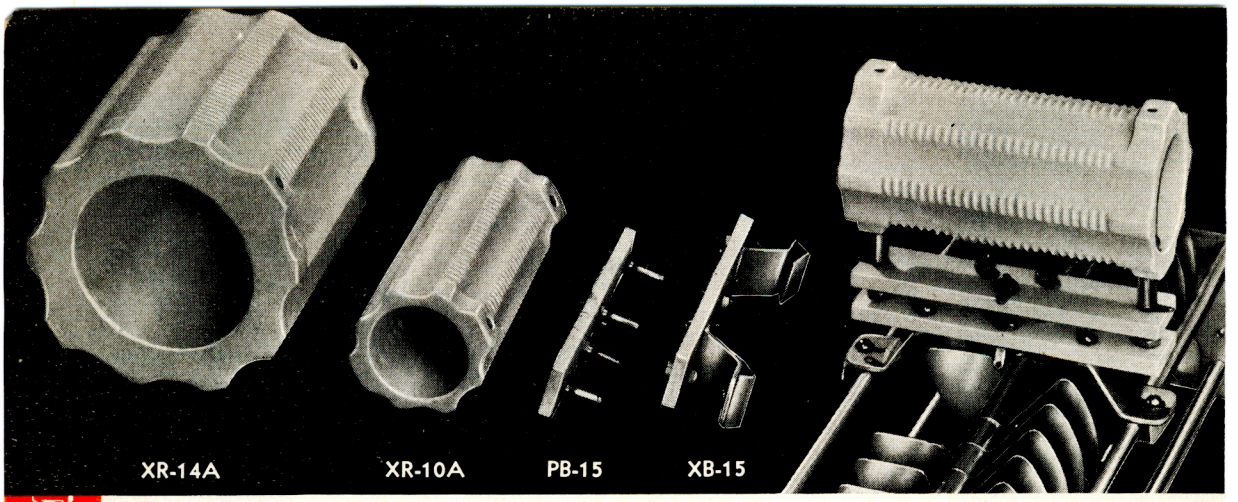

NATIONAL COMPANY, MALDEN, MASS.

TRANSMITTER COIL FORMS

The Transmitter Coil Forms and Mounting are designed as a group, and mount conveniently on the bars of a TMA condenser. The larger coil form, Type XR-14A, has a winding diameter of 5", a winding length of 3¾" (30 turns total) and is intended for the 80 meter band. The smaller form, Type XR-10A, has a winding length of 3¾" and a winding diameter of 2½" (26 turns total). It is intended for the 20 and 40 meter bands.

Either coil form fits the PB-15 plug. For higher frequencies, the plug may be used with a self-supporting coil of copper tubing. The XB-15 Socket may be mounted on breadboards or chassis, as well as on the TMA Condenser.

SINGLE UNITS

XR-10A, Coil Form only	**List $1.65**
XR-14A, Coil Form only	**List $4.00**
PB-15, Plug only	**List $1.50**
XB-15, Socket only	**List $2.00**

ASSEMBLIES

UR-10A, Assembly (including small Coil Form, Plug and Socket)	**List $5.00**
UR-14A, Assembly (including large Coil Form, Plug and Socket)	**List $7.00**

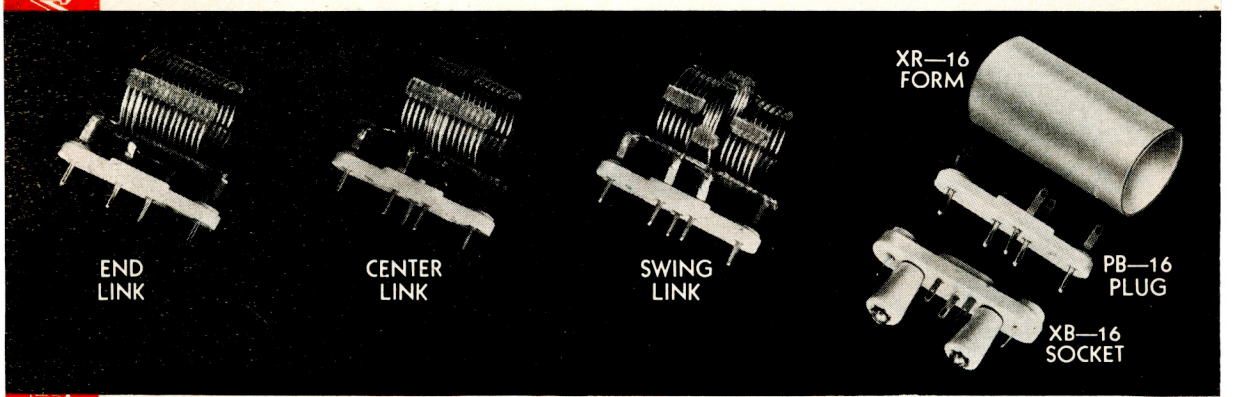

EXCITER COILS AND FORMS — TYPE AR-16 (Air Spaced)

These air-spaced coils are suitable for use in stages where the plate input does not exceed 50 watts and are available in the sizes tabulated below. Capacities listed will resonate the coils at the low frequency end of the band and include all stray circuit capacities. All have separate link coupling coils and all fit the PB-16 Plug and XB-16 Socket.

The XR-16 Coil Form also fits the PB-16 Plug and XB-16 Socket. It has a winding diameter of 1¼" and a winding length of 1¾".

TEMPORARILY DISCONTINUED

Order by Catalog Symbol Shown in This Table

Band	End Link	Cap Mmf	Center Link	Cap Mmf	Swinging Link	Cap Mmf
5 meter	AR16-5E	20	AR16-5C	20	——	—
10 meter	AR16-10E	20	AR16-10C	20	AR16-10S	25
20 meter	AR16-20E	26	AR16-20C	26	AR16-20S	40
40 meter	AR16-40E	33	AR16-40C	33	AR16-40S	55
80 meter	AR16-80E	37	AR16-80C	37	AR16-80S	60
160 meter	AR16-160E	65	AR16-160C	65	——	—

TEMPORARILY DISCONTINUED

XR-16, Coil Form only	**List $.70**
PB-16, Plug-in Base only	**List $.45**
XB-16, Plug-in Socket only	**List $.55**

AR-16 Coils — Any type (see table). Including PB-16 Plug as illustrated. Each, **List $1.65**

TEMPORARILY DISCONTINUED

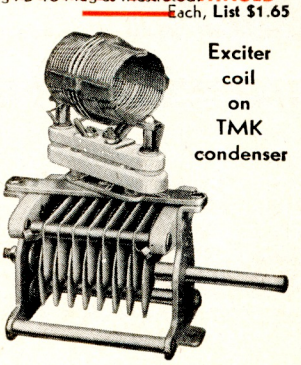

Exciter coil on TMK condenser

All prices subject to change without notice

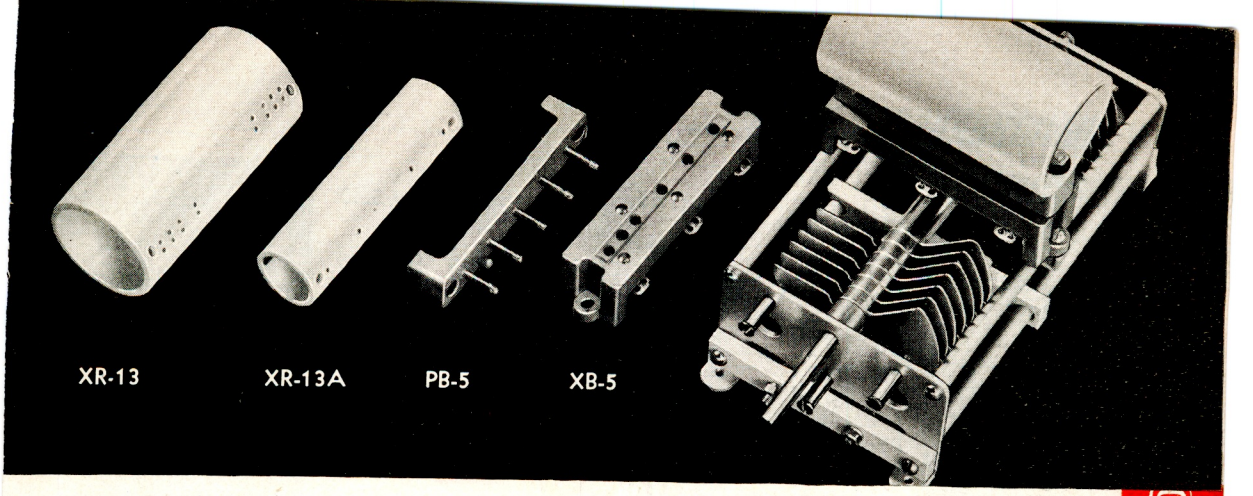

BUFFER COIL FORMS

National Buffer Coil Forms are designed to mount directly on the tie bars of a TMC condenser using the PB-5 Plug and XB-5 Socket. Plug and Socket are of molded R-39.

The two coil forms are of Isolantite, left unglazed to provide a tooth for coil dope. The larger form, Type XR-13, is 1¾" in diameter and has a winding length of 2¾". The smaller form, Type XR-13A, is 1" in diameter and provides a winding length of 2¾". Both forms have holes for mounting and for leads.

SINGLE UNITS

XR-13, Coil Form only **List $1.25**
XR-13A, Coil Form only **List $ .70**
PB-5, Plug only **List $ .85**
XB-5, Socket only **List $ .85**

ASSEMBLIES

UR-13A, Assembly (including small Coil Form, Plug and Socket) **List $2.25**

UR-13, Assembly (including large Coil Form, Plug and Socket) **List $2.75**

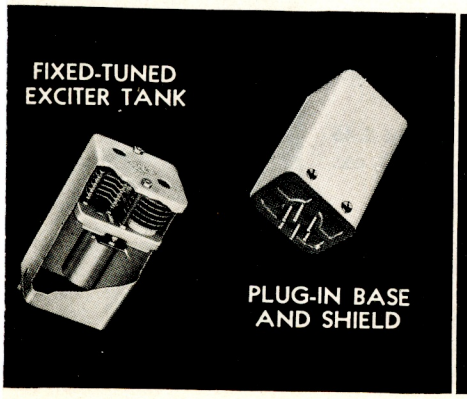

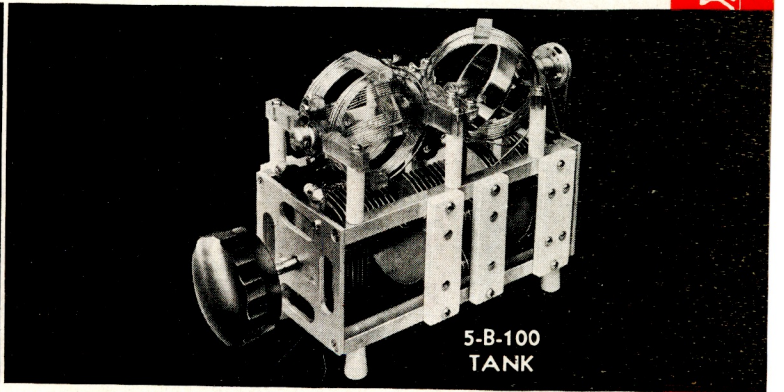

FIXED TUNED EXCITER TANK

Similar in general construction to National I.F. transformers, this unit has two 25 mmf., 2000 volt air condensers and an unwound XR-2 coil form.

FXT, without plug-in base **List $5.00**
FXTB-5, with 5 prong base **List $5.50**
FXTB-6, with 6 prong base **List $5.50**

PLUG-IN BASE AND SHIELD

The low-loss R-39 base is ideal for mounting condensers and coils when it is desirable to have them shielded and easily removable. Shield can is 2" x 2⅜" x 4⅛".

PB-10-5, (5 Prong Base & Shield) **List $.85**
PB-10-6, (6 Prong Base & Shield) **List $.85**
PB-10A-5, (5 Prong Base only) **List $.45**
PB-10A-6, (6 Prong Base only) **List $.45**

5-B-100 TANK

The National 5-B-100 is a complete tank circuit (including coils, condenser and R.F. choke), which tunes through five amateur bands with a single dial. The tank replaces the tuning condenser, set of five plug-in coils, plug-in coil socket and R.F. choke, without sacrificing efficiency or space, yet it costs no more.

The 5-B-100 is actually more compact than a tuning condenser and mounted plug-in coil for the same power capabilities. In addition to the compactness and wide tuning range advantages of the 5-B-100, the tank provides for the first time a real constant L/C ratio throughout the tuning range. Harmonics from the low-frequency bands are suppressed without sacrifice of efficiency on the high-frequency bands. Constant link loading or capacity coupling may be used.

The 5-B-100 is an ideal plate tank for R.F. amplifiers using such tubes as 35T, 809, 811, 812, RK-11, RK-12, HK-24, HY-30Z, HY-51Z, etc. with input up to 150 watts (1250 volts unmodulated or 750 volts modulated maximum). Also ideal for grid tank of amplifiers up to 2 KW plate input.

Four mounting insulators are supplied on the base. Overall dimensions are 4 inches wide, 6 inches high and 8 inches deep. Shipping weight, 5 lbs.

5-B-100 Tank, List $40.00

All prices subject to change without notice

TEMPORARILY DISCONTINUED

COMPANY
EN, MASS., U.S.A.

NATIONAL PARTS

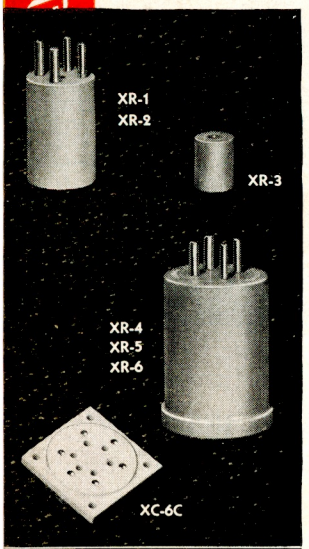

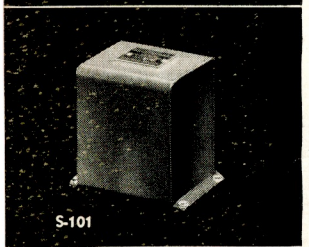

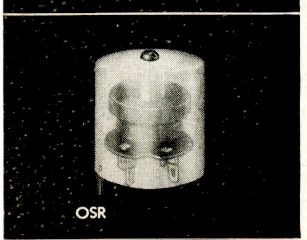

POLYSTYRENE COIL FORMS

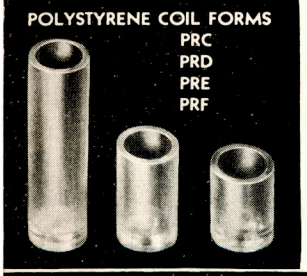

COIL FORMS

XR-1, Four prong, **List $.55**
XR-2, without prongs **List $.40**

Molded of R-39, permitting them to be grooved and drilled. Coil form diameter 1", length 1½".

XR-3 **List $.35**

Molded of R-39. Diameter 9/16", length ¾". Without prongs.

XR-4, Four prong, **List $.85**
XR-5, Five prong, **List $.85**
XR-6, Six prong, **List $.85**

Molded of R-39, permitting them to be grooved and drilled. Coil form diameter 1½", length 2¼". A special socket is required for the six-prong form.

XC6C, Special six-prong socket for XR-6 Coil Form, **List $.85**

IMPEDANCE COUPLER

S-101 **List $6.60**

A plate choke, coupling condenser and grid leak sealed in one case, for coupling the output of a regenerative detector to an audio stage. Used in SW-3U.

OSCILLATOR COIL

OSR **List $1.65**

A shielded oscillator coil which runs to 100 KC with .00041 Mfd. Two separate inductances closely coupled. Excellent for interruption-frequency oscillator in super-regenerative receivers.

TEMPORARILY DISCONTINUED

H. F. COIL FORMS

Symbol	Outside Diameter	Length	List
PRC-1	⅜"	⅜"	$.20
PRC-2	⅜"	½"	.20
PRC-3	⅜"	¾"	.20
PRD-1	½"	½"	.20
PRD-2	½"	1"	.20
PRE-1	9/16"	¾"	.25
PRE-2	9/16"	1"	.25
PRE-3	9/16"	2"	.35
PRF-1	¾"	¾"	.35
PRF-2	¾"	1¼"	.45

COIL SHIELDS

RO, coil shield **List $.40**
2" x 2⅜" x 4⅛" high

J30, coil shield **List $.40**
2½" dia. x 3¾" high

B30, coil shield **List $.40**
3" dia. x 3¾" high without mounting base.

B30-B, coil shield **List $.55**
Same as above, but with mounting base.

TEMPORARILY DISCONTINUED

TUBE SHIELDS

TS, tube shield **List $.45**
With cap and base.

T58, tube shield **List $.45**
With cap and base, for 77, 78, etc. tubes.

T78, tube shield **List $.45**
With cap and base, for 77, 78, etc. tubes.

T14, tube shield **List $.45**
2⅛" high, for 814, RK-20, etc.

T07, tube shield **List $.45**
3" high, for 807, RK-23, etc.

TEMPORARILY DISCONTINUED

JACK SHIELD

JS-1, jack shield **List $.40**
For shielding small standard jacks mounted behind a panel, or on the ends of extension cords.

TEMPORARILY DISCONTINUED

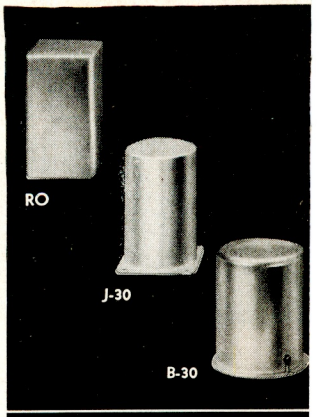

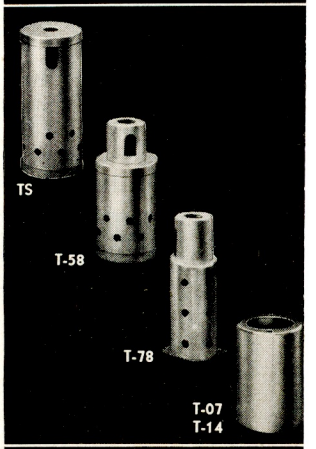

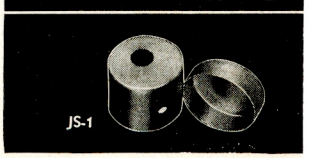

NATIONAL CABINETS

The National Cabinets listed below are the same as those used in National Receivers, except that they are supplied in blank form. They are made of heavy gauge steel, and the paint is unusually well bonded to the metal. Sub-bases and bottom covers are included in the price.

	Width	Height	Depth	List Price
Type C-SW3	9¾"	7"	9"	$6.00
Type C-NC100	17¼"	8¾"	11¼"	9.50
Type C-HRO	16¾"	8¾"	10"	9.50
Type C-One-Ten	11"	7"	7¼"	5.00
Type C-SRR	7½"	7"	7½"	4.00

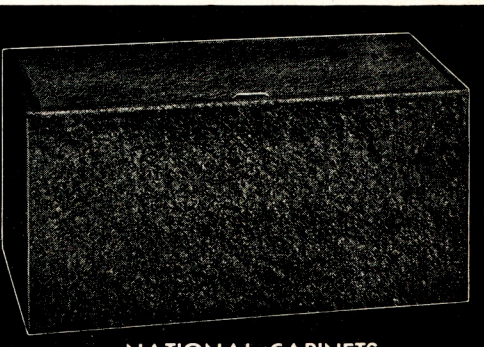

NATIONAL CABINETS

NATIONAL PARTS

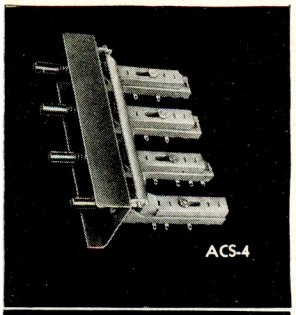
ACS-4

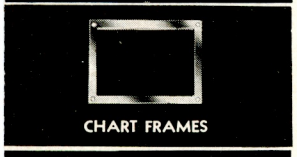
CHART FRAMES


COIL DOPE


NDC-8
NDC-10
NDC-2

PUSH SWITCH

ACS-4, Four gang, with trigger bar **List $5.50**

ACS-1, Single section, less trigger bar **List $1.40**

TEMPORARILY DISCONTINUED

The National Interlocking Push Switch has low losses, complete reliability and positive contacts. Insulation is R-39. The silverplated contacts are double pole, double throw.

CHART FRAME

The National Chart Frame is blanked from one piece of metal, and includes a celluloid sheet to cover the chart. Size 2¼" x 3¼", with sides ¼" wide.

Type CFA **List $.55**

COIL DOPE

CD-5, Liquid Polystyrene Cement — is ideal for windings as it will not spoil the properties of the best coil form. **List $1.65**

TEMPORARILY DISCONTINUED

SPEAKER CABINETS

NDC-8 for 8" speaker **List $5.50**

NDC-10 or 10" speaker **List $6.60**

NDC-2 for 10" speaker **List $8.50**

These metal speaker cabinets are acoustically correct. They are lined with acoustic felt, and are of welded construction to eliminate rattles. Finish is black wrinkle on NDC-8 and NDC-10. NDC-2 is finished in two-tone gray to match the NC-200 TG receiver.

National Oscilloscopes have power supply and input controls built in. A panel switch permits use of the built-in 60-cycle sweep or external audio sweep for securing the familiar trapezoid pattern for modulation measurements.

CRM, less tubes **List $21.00**

1" screen, using RCA-913 and 6X5 rectifier. Table model, 4⅛" x 6⅛" x 8".

CRR, less tubes **List $35.00**

2" screen, using RCA-902 and 6X5 rectifier. Relay rack mounting.

I. F. TRANSFORMERS

IFC, Transformer, air core **List $5.50**

IFCO, Oscillator, air core **List $5.50**

Air dielectric condensers isolated from each other by an aluminum shield. Litz wound coils on a moisture proofed ceramic base. Shield can 4⅛" x 2⅜" x 2". Available for either 175 KC or 450–550 KC. Specify frequency.

IFD, Diode Transformer, air core **List $3.85**

TEMPORARILY DISCONTINUED

Tuned primary and untuned, closely-coupled secondary for full wave diode rectifiers. For noise silencing circuits, etc. 450–550 KC, air core only.

IFE, Transformer. Same as IFC but iron core, 450–550 KC only **List $5.50**

NATIONAL HIGH FIDELITY TRF UNITS

Each chassis provides a three-stage RF Amplifier tuned to one station only.

Each RF Transformer is tuned both primary and secondary (8 tuned circuits). The coupling is adjustable to include 10 KC with less than 1 db variation in the audio range. Sensitivity is adjustable from 5 microvolts to one volt. Three models cover ranges of 540–875, 740–1230, and 1100–1700 KC. The chassis fits a standard 3½" relay rack panel.

TEMPORARILY DISCONTINUED

DLUS, Tuner, wired and tested unit on ⅛" steel, wrinkle finish, **less tubes, List $82.50**

DLUA, Tuner, same as DLUS but has 3/16" aluminum panel, crackle finish, **less tubes** **List $86.50**

DLCA, Chassis as illustrated with sockets and terminals riveted in place **List $5.00**

DLPS, Steel ⅛" panel **List $1.65**

DLPA, Aluminum 3/16" panel **List $5.50**

DLT, RF Transformer, set of four required **List, each $7.25**

(Specify operating frequency)

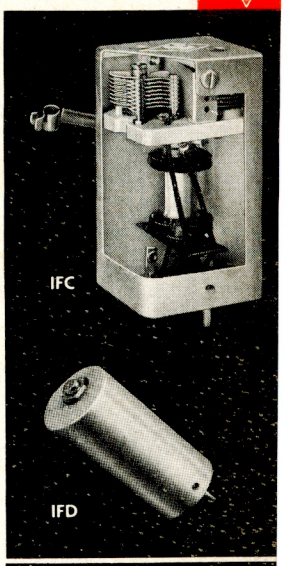
IFC
IFD

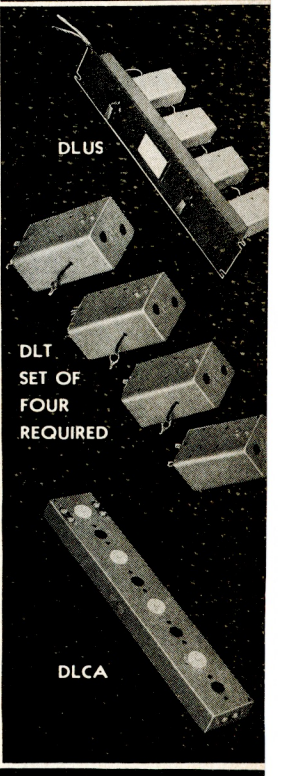
DLUS
DLT SET OF FOUR REQUIRED
DLCA

NATIONAL OSCILLOSCOPES

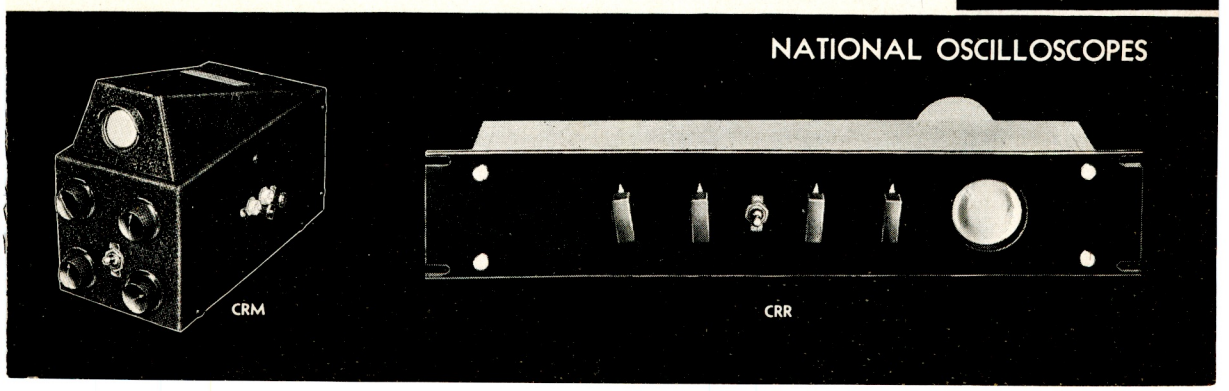
CRM
CRR

NATIONAL LOW-LOSS SOCKETS AND INSULATORS

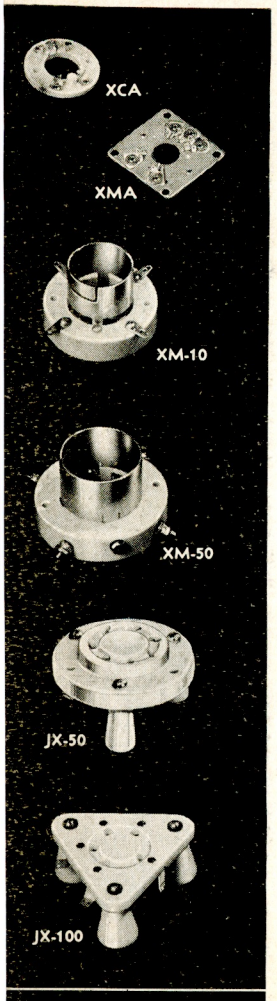

XCA **List $1.65**
A low-loss socket for acorn triodes.

XMA **List $2.20**
For pentode acorn tubes, this socket has built-in by-pass condensers. The base is a copper plate.

XM-10 **List $1.50**
A heavy duty metal shell socket for tubes having the UX base.

XM-50 **List $2.00**
A heavy duty metal shell socket for tubes having the Jumbo 4-pin base ("fifty watters").

JX-50 **List $1.35**
Without Standoff Insulators

JX-50S **List $1.65**
With Standoff Insulators

A low-loss wafer socket for the 813 and other tubes having the Giant 7-pin base.

JX-100 **List $3.30**
Without Standoff Insulators

JX-100S **List $4.00**
With Standoff Insulators

A low-loss wafer socket for the 803, RK-28 and other tubes using the Giant 5-pin base.

SAFETY GRID & PLATE CAPS

SPG **List $.40**
9/16" Cap, R-39 L. L. insulation. These offer protection against accidental contact with High Voltage lobe caps.

SPP-9 **List $.40**
9/16" Cap L. L. ceramic insulation.

SPP-3 **List $.35**
3/8" Cap L. L. ceramic insulation

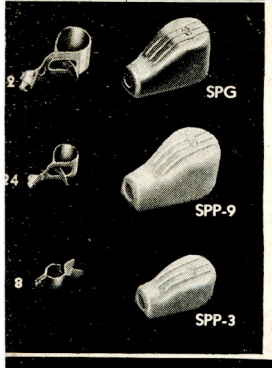

GRID & PLATE GRIPS

12, for 9/16" Caps **List $.10**
24, for 3/8" Caps **List $.05**
8, for 1/4" Cap **List $.05**
12 & **24** suitable for glass tubes
8 is for metal tubes

GS-1, 1/2" x 1 3/8" **List $.40**

GS-2, 1/2" x 2 7/8" **List $.50**

GS-3, 3/4" x 2 7/8" **List $1.00**

GS-4, 3/4" x 4 7/8" **List $1.25**

GS-4A, 3/4" x 6 7/8" **List $1.75**

Cylindrical low-loss steatite standoff insulators with nickel plated caps and bases.

GSJ, (not illustrated) **List $.10**
A special nickel plated jack top threaded to fit the 3/4" diameter insulators GS-3, GS-4 & GS-4A.

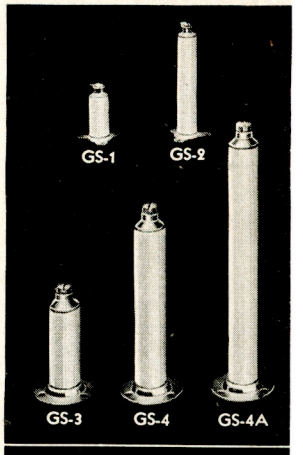

GS-5, 1 1/4" **List, each $.40**

GS-6, 2" **List, each $.70**

GS-7, 3" **List, each $1.25**

GS-10, 3/4", package of 10 **List $1.20**

These cone type standoff insulators are of low-loss steatite. They have a tapped hole at each end for mounting.

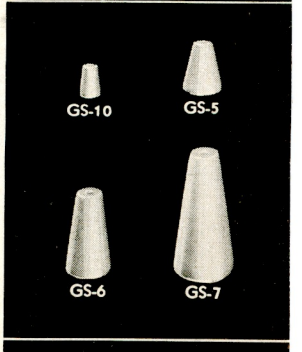

GS-8, with terminal **List $.90**

GS-9, with Jack **List $1.25**

These low-loss steatite standoff insulators are also useful as lead-through bushings.

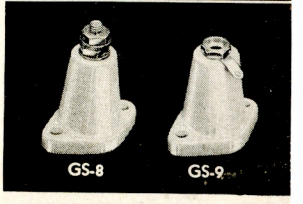

XC Series Sockets

XC-4	List $.60
XC-5	List $.65
XC-6	List $.70
XC-7S	List $.75
XC-7L	List $.75
XC-8	List $.65

National wafer sockets have exceptionally good contacts with high current capacity together with low loss Isolantite insulation. A l types have a locating groove to make tube insertion easy.

All prices subject to change without notice

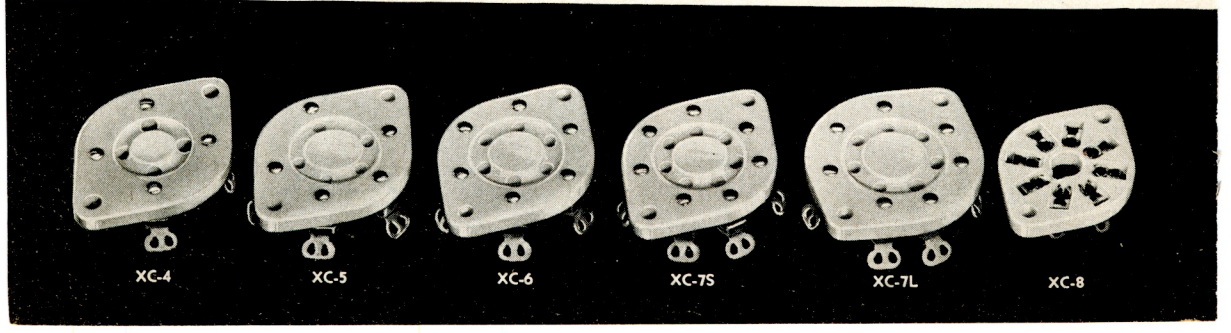

NATIONAL LOW-LOSS SOCKETS AND INSULATORS

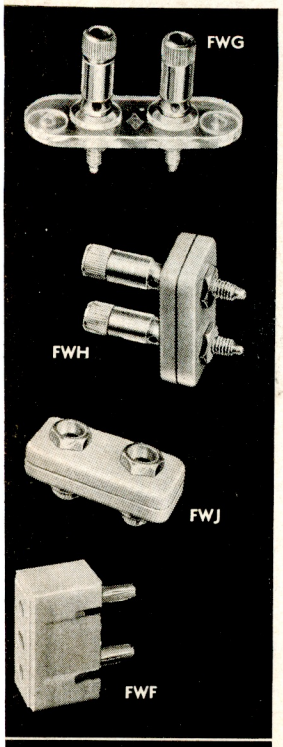

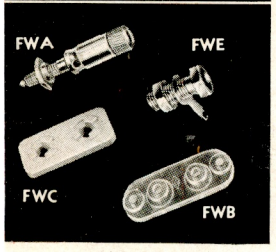

FWG **List $.70**

A Victron terminal strip for high frequency use. The binding posts take banana plugs at the top, and grip wires through hole at the bottom, simultaneously, if desired.

FWH **List $.95**

The insulators of this terminal assembly are molded R-39 and have serrated bosses that allow the thinnest panel to be gripped firmly, and yet have ample shoulders. Binding posts same as FWG above.

FWJ **List $.75**

This assembly uses the same insulators as the FWH above, but has jacks. When used with the FWF plug (below), there is no exposed metal when the plug is in place.

FWF **List $1.10**

This molded R-39 plug has two banana plugs on ¾" centers and fits FWH or FWJ above. Leads may be brought out through the top or side.

FWA, Post **List, each $.30**
Brass Nickel Plated

FWE, Jack **List, each $.20**
Brass Nickel Plated

FWC, Insulator
List, per pair $.40
R-39 Insulation

FWB, Insulator **List, each $.10**
Polystyrene insulation

CIR Series Sockets

Any Type **List $.45**

Type CIR Sockets feature low-loss isolantite or steatite insulation, a contact that grips the tube prong for its entire length, and a metal ring for six position mounting. The sockets are supplied with two metal standoffs.

AA-3 **List $.60**

A low-loss steatite spreader for 6 inch line spacing. (600 ohms impedance with No. 12 wire.)

AA-5 **List $.50**

A low-loss steatite aircraft-type strain insulator.

AA-6 **List $.90**

A general purpose strain insulator of low-loss steatite.

XS-6 **List, each $.20**

A low-loss isolantite bushing for ½" holes.

XP-6

Same as above but Victron.
List, box of ten $.85

TPB **List, per dozen $.85**

A threaded polystyrene bushing with removable .093 conductor moulded in, ¼" diam., 32 thread.

XS-7, (⅜" Hole) **List $.55**
XS-8, (½" Hole) **List $.75**

Steatite bushings. Prices include male and female bushings with metal fittings.

XS-1, (1" Hole) **List $1.20**
XS-2, (1½" Hole) **List $1.35**

Prices listed are per pair, including metal fittings. Insulation steatite.

XS-3, (2¾" Hole) **List $6.00**
XS-4, (3¾" Hole) **List $7.25**

Prices are per pair, including metal fittings. These low-loss steatite bowls are ideal for lead-in purposes at high voltages.

XS-5F, With Fittings
List, per pair $17.00

These big low-loss bowls have an extremely long leakage path and a 5¼" flange for bolting in place. Insulation steatite.

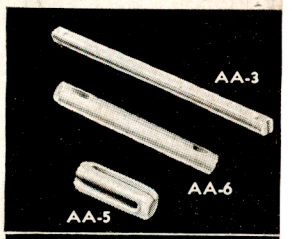

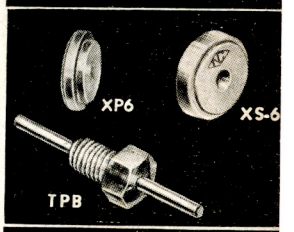

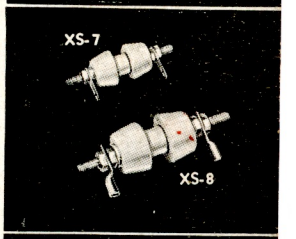

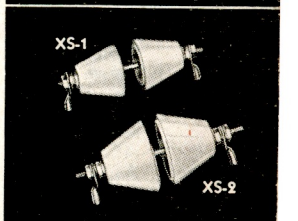

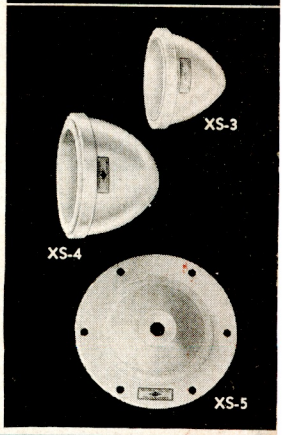

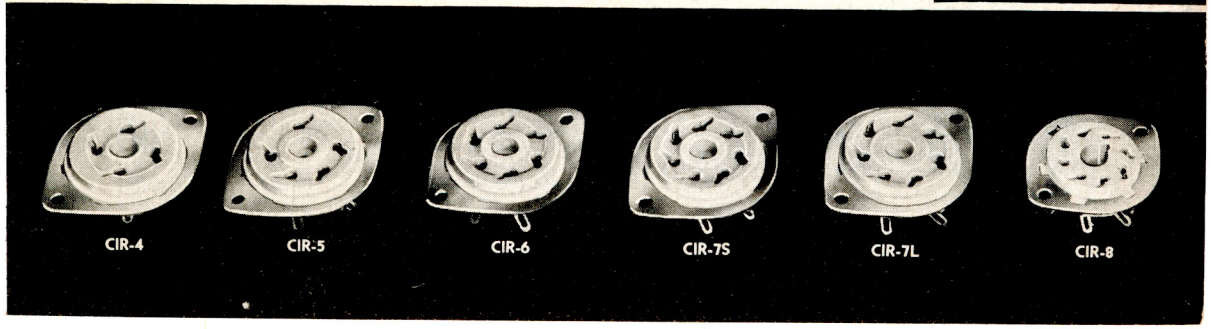

NATIONAL NC-200

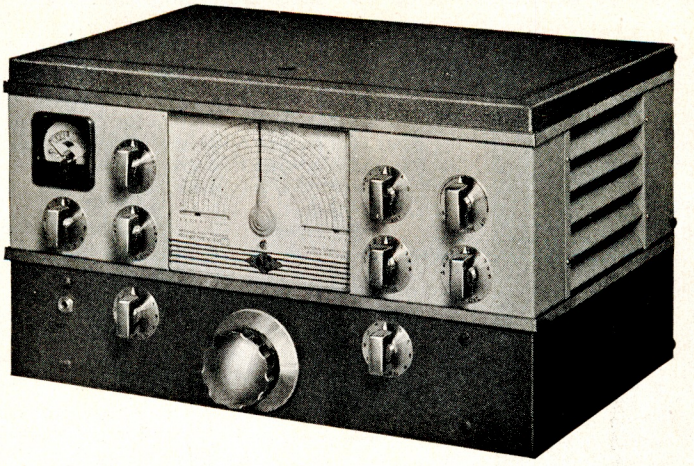

The National NC-200 is a new communications receiver having a number of features not previously available. Twelve tubes are used in a highly perfected circuit that includes an extremely effective noise limiter. The crystal filter has an exceptionally wide selectivity range for use on both CW and phone, as well as a phasing circuit that makes rejection ratios as high as 10,000 to 1 available even when the interfering signal is only a few hundred cycles from the desired signal. The AVC holds the audio constant within 2 db for signals from 10 microvolts to 100,000 microvolts. The sensitivity of the NC-200 is particularly high, requiring only 1 microvolt input for 1 watt of audio output on the highest frequencies covered by the receiver. Signal-to-image ratio is better than 30 db at ten meters.

There are ten calibrated coil ranges, each with its own scale on the direct-reading dial. Six of these ranges provide continuous coverage from 490 KC to 30 MC. The remaining four ranges cover the 10, 20, 40 and 80 meter bands, each of which is spread over the major portion of the dial scale. Ranges are selected by a panel control knob. A movable-coil system similar to the NC-100 is used. The inertia-type dial drive has a ratio of about 20 to 1.

All models of the NC-200 are suitable for either AC or battery operation, having both a built-in AC power supply and a special detachable cable and plug for battery connection. Removal of the speaker plug disconnects both plate and screen circuits of the audio power stage thus providing maximum battery economy. The B supply filter and the standby switch are wired to the battery terminals, so that the filter is available for vibrator or dynamotor B supplies.

The ten-inch speaker is housed in a separate cabinet specially designed to harmonize with the trim lines of the receiver. The undistorted output is 8 watts.

All features expected in a fine communication receiver are provided. These include CW oscillator, Signal Strength Meter, B-supply switch, etc. A phonograph input jack is provided.

NC-200 TG, Table Model, two tone gray wrinkle receiver only. **List $265.83**

NC-2 TS, Table mounting 10" P.M. Loud Speaker in cabinet to match NC-200 TG above. **List $25.00**

NC-200 RG, Rack Model, gray wrinkle 3/16" aluminum panel receiver only. **List $289.33**

NC-2 RS, Rack Mounting 10" P.M. Loud Speaker on 10½" panel to match NC-200 RG above. **List $25.00**

NATIONAL NEW NC-45

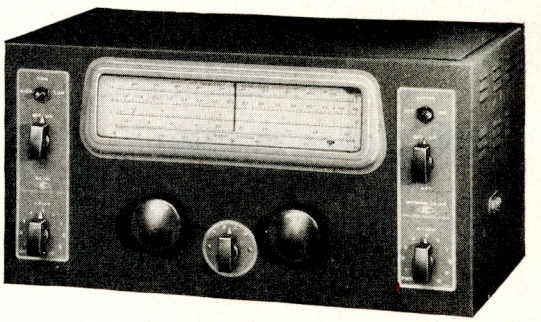

The NC-45 receiver is an eight tube superheterodyne combining capable performance with low price. Features include a series valve noise limiter with automatic threshold control, tone control, CW oscillator, separate RF and AF gain controls, and AVC. Power supplies are self contained except for the battery model which must have an external source of heater and plate power, such as batteries or vibrapack.

A straight-line-frequency condenser is used in conjunction with a separate band spread condenser. This combination plus the full vision dial calibrated in frequency for each range covered and a separate linear scale for the band spread condenser, makes accurate tuning easy. Both condensers have inertia type drive. A coil switch with silver plated contacts selects the four ranges from 550 KC to 30 MC. Provision is made for either headphone or speaker.

Like all receivers which have no preselector stage, the NC-45 is not entirely free from images. However, where price is an important consideration, the NC-45 will be found a very satisfactory receiver.

NC-45 — Receiver only, complete with tubes, coils covering from 550 KC to 30 MC for 105–130 volts AC or DC operation — black finish. **List $84.17**

NC-45B — Receiver only, same as above but for battery operation, less batteries. **List $84.17**

NC-45A — Receiver only, same as above but for 105–130 volts AC only. **List $84.17**

NC-44TS — Loud Speaker in table mounting cabinet to match above receivers. **List $11.66**

RRA — Relay Rack Adapters designed for mounting these receivers in a standard relay rack. **List $2.75**

Shipping Weights: All models, 45 pounds, including speaker.

All prices subject to change without notice

NATIONAL HRO

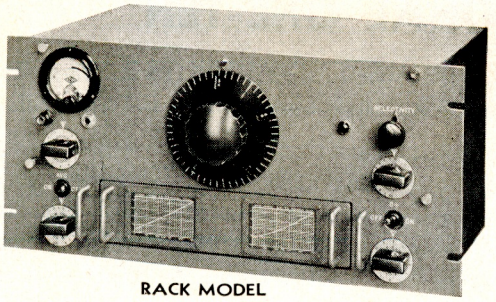

RACK MODEL

The HRO Receiver is a high-gain superheterodyne designed for communication service. Two preselector stages give remarkable image suppression, weak signal response and high signal-to-noise ratio. Air-dielectric tuning capacitors account, in part, for the high degree of operating stability. A crystal filter with both variable selectivity and phasing controls makes possible adjustment of selectivity over a wide range. Heterodynes and interfering c.w. signals may be "phased out" (attenuated) by correct setting of the phasing control. A signal strength meter, connected in a vacuum tube bridge circuit, is calibrated in S units from 1 to 9 and in db above S9 from 0 to 40. Also included are automatic and manual volume control features, a beat oscillator, a headphone jack and a B+ stand-by switch. Power supply is a separate unit. The standard model of HRO is supplied with four sets of coils covering the frequencies from 1.7 to 30 megacycles. Each coil set covers two amateur bands and the spectrum between. The higher frequency amateur band of each range, by a simple change-over operation, may be expanded to occupy 400 divisions of the 500 division PW instrument type dial.

For those who require the high performance of the HRO but do not need its extreme versatility, the HRO Jr. is offered. The fundamental circuit and mechanical details of both receivers are identical, but the HRO Jr. is simplified by omitting the crystal filter, signal strength meter and by supplying coils less the band-spread feature.

The frequency range of both the HRO and HRO Jr. may be extended to 50 kilocycles by using additional coil sets.

All models of the HRO are supplied with 6.3 volt heater type tubes. Table models and accessories are finished in black wrinkle enamel.

A technical bulletin covering completely all details will be supplied upon request.

HRO table model, receiver only, complete with four sets of coils (1.7–4.0, 3.5–7.3, 7.0–14.4, 14.0–30.0 MCS). **List $329.50**

HRO Jr., table model, receiver only, with one set of 14 to 30 mc. coils. **List $198.00**

COILS

HRO Type	**E,** Range 900–2050 kc	**List $22.00**
HRO Type	**F,** Range 480–960 kc	**List $22.00**
HRO Type	**G,** Range 180–430 kc	**List $30.00**
HRO Type	**H,** Range 100–200 kc	**List $33.00**
HRO Type	**J,** Range 50–100 kc	**List $40.00**
HRO Jr. Type JA, Range 14.0–30.0 mc		**List $18.25**
HRO Jr. Type JB, Range 7.0–14.4 mc		**List $18.25**
HRO Jr. Type JC, Range 3.5–7.3 mc		**List $18.25**
HRO Jr. Type JD, Range 1.7–4.0 mc		**List $18.25**

MCS table model cabinet, 8" PM dynamic speaker and matching transformer **List $18.25**

697 Table power unit; 115 volt, 60 cycle input; 6.3 volt heater and 230 volt, 75 m.a. output, with tube **List $29.50**

See our 1942 catalogue No. 500 for relay rack mounting, coil containers and accessories.

NATIONAL NC-100A NC-101X

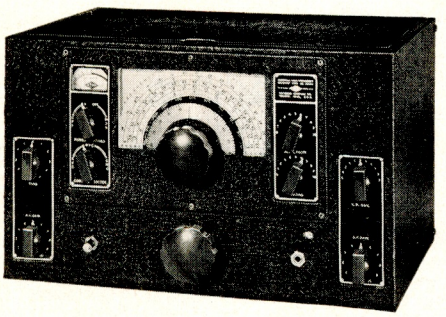

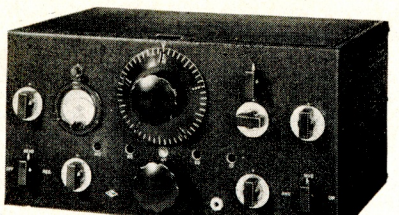

These 11 tube superheterodyne receivers are self-contained (except for the speaker) in a table model cabinet that is readily adapted to relay rack mounting. One stage of R.F. and two stages of I.F. are used. Low loss insulation and high-Q coils give ample sensitivity and selectivity. Separate R.F. and Audio Gain Controls and a signal strength meter are mounted on the panel. Other controls are tone, CW Oscillator, AVC with amplified and delayed action, a B+ switch, and a phone jack. A self-contained power supply provides all necessary voltages including speaker field excitation. The range changing system is unique in that it combines the mechanical convenience of a coil switch with the electrical efficiency of plug-in coils.

All **NC-100** series receivers are fitted with a noise limiter of truly remarkable effectiveness.

The **NC-100A,** illustrated above, covers the range from 540 KC to 30 MC. The large full vision dial is calibrated directly in megacycles and a separate high speed vernier scale provides high precision in logging. The **NC-100XA** is similar but equipped with a crystal filter.

The **NC-101X,** illustrated below, is built strictly for the amateur bands and covers only the following ranges: 1.7–2.05 MC, 3.5–4.0 MC, 7.0–7.3 MC, 14.0–14.4 MC, and 28.0–30.0 MC. The NC-101X is equipped with a crystal filter, S-meter, and the PW type instrument dial.

The **NC-101XA** has the same features as the NC-101X, except for the direct reading dial and the cabinet, which are similar to the NC-100XA.

NC-100A — complete with tubes. AC model — 10" speaker in cabinet. **List $220.00**

NC-100XA — complete with tubes and crystal filter. AC model — 10" speaker. **List $261.25**

NC-101X — complete with tubes. AC model — 10" speaker in cabinet. **List $236.50**

NC-101XA — complete with tubes. AC model — 10" speaker in cabinet. **List $236.50**

See our 1942 catalogue No. 500 for battery models, 12 inch speakers, 200–400 kc range, etc.

NOTE: *Special models of the NC-100 receiver with bands covering a 200–400 KC range are available. Prices furnished upon request. Battery models can be operated from 686 Vibrapak.*

All prices subject to change without notice

NC-101X and NC-101XA are temporarily discontinued.

NATIONAL COMPANY, INC., MALDEN, MASS., U.S.A.

ONAL COMPANY, INC., MALDEN, MASS., U.S.A.

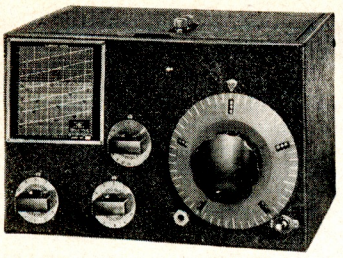

110 Receiver and 6 sets of coils, without tubes, speaker or power supply. **List $93.50**

5886 Power Supply for above receiver, with tube. **List $32.50**

NATIONAL ONE-TEN

The One-Ten Receiver fulfills the need for an adequate receiver to cover the field between one and ten meters.

A four-tube circuit is used, composed of one tuned R.F. stage, a self-quenching super-regenerative detector, transformer coupled to a first stage of audio which is resistance coupled to the power output stage. Tubes required: 954-R.F.; 955-Detector; 6C5-1st Audio, 6F6-2nd Audio.

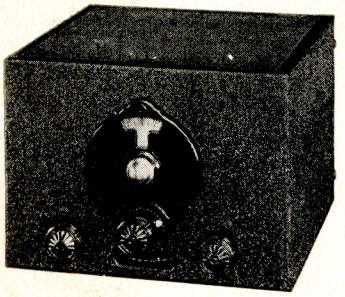

NATIONAL SW-3

The SW-3U Receiver employs a circuit consisting of one R.F. stage transformer coupled to a regenerative detector and one stage of impedance coupled audio. This circuit provides maximum sensitivity and flexibility with the smallest number of tubes and the least auxiliary equipment. The single tuning dial operates a precisely adjusted two gang condenser; the regeneration control is smooth and noiseless, with no backlash or fringe howl; the volume control is calibrated from one to nine in steps corresponding to the R scale.

ONE UNIVERSAL MODEL — The circuit of the SW-3U is arranged for either battery or AC operation without coil substitution or circuit change. Battery operation utilizes two 1N5-G and one 1A5-G tubes. AC operation utilizes two 6J7-G and one 6C5-G tubes. Type 5886 AB power supply is recommended.

SW-3U, Universal model, without coils, phones, tubes or power supply. **List $38.50**

5886-AB, Power Supply, 115 V, 60 cycle, with 80 Rectifier. **List $32.50**

General Coverage Coils

Cat. No.	Range — Meters	List Per Pair
30	9 to 15	**$3.85**
31	13.5 to 25	**3.85**
32	23 to 41	**3.85**
33	40 to 70	**3.85**
34	65 to 115	**3.85**
35	115 to 200	**3.85**
36	200 to 360	**4.40**
37	350 to 550	**4.40**
38	500 to 850	**5.50**
39	850 to 1200	**7.25**
40	1200 to 1500	**7.25**
41	1500 to 2000	**7.25**
42	2000 to 3000	**9.50**

Band Spread Coils

30A	— 10 meter	**$3.85**
31A	— 20 meter	**3.85**
33A	— 40 meter	**3.85**
34A	— 80 meter	**3.85**
35A	— 160 meter	**3.85**

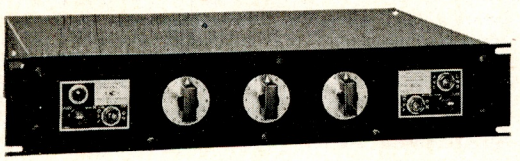

NATIONAL SCR-2

The SCR-2 is an extremely compact crystal controlled receiver for single channel reception mounted on a 3½" relay rack panel. It has two stages of tuned RF amplification, a dual purpose converter with crystal controlled oscillator, two stages of IF amplification, a detector and one audio stage. Auxiliary circuits are AVC, CW oscillator and noise limiter. Nine tubes are used, and the power supply is self-contained.

The SCR-2 is definitely a high performance receiver. Signal-to-noise ratio averages 10 db for an input of 2.5 microvolts. The AVC is flat within 4 db for inputs from 1 microvolt to well over 1 volt. Being crystal controlled, the frequency stability is excellent. The IF channel has a bandspread characteristic to allow for slight transmitter drift, etc.

As the SCR-2 receiver is intended for communication work, the audio channel has been deliberately made flat only from 100 to 1500 cycles, with increasing attenuation of higher frequencies, thus providing good intelligibility with maximum reduction of unwanted signals and noise.

SCR-2 receivers are available for use at fixed frequencies between 100 kcs and 18 mcs. A free booklet describing this receiver will be mailed on request. **List, less crystal, $**

All prices subject to change without notice

NATIONAL COMPANY

61 SHERMAN STREET, MALDEN, MASS., U. S. A.


ARMY
E
NAVY
McElroy
MANUFACTURING
CORPORATION
82 BROOKLINE AVENUE
BOSTON, MASS.

Proudest moment



As much as we'd like to boast about our products, nothing means so much to us as that wonderful day of November 8, 1943, when we received the Army-Navy "E". We're thrilled . . . we're forever grateful to the Army and Navy . . . and we're going to try awfully hard to live up to this honor.

We've got a happy factory, staffed by a couple of hundred fine American girls and fellows. And we put all the ability we have into each job we do. On the basis of thirty years' experience, I have ideas as to what constitutes good telegraph apparatus. Our engineers, under Tom Whiteford, design the original working models. Our girls and fellows build them.

Now a few words about our selling policy. We have no salesmen, but we do have some resident representatives at points where they may be helpful. For example, in Chicago, there's Joe Goode at 325 West Huron Street. He knows the business of distributing communications equipment through commercial outlets. In New York, there's Frank Rigby who has been my friend since our Marine days in the last World War, and who helps me by passing along information in that vicinity. And we have Hoyt Haddock whom I've known as a wireless operator for twenty years. Hoyt is in Washington not to "sell" but to tell about our equipment.

T. A. McElroy

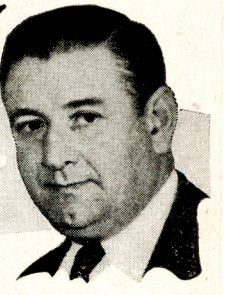

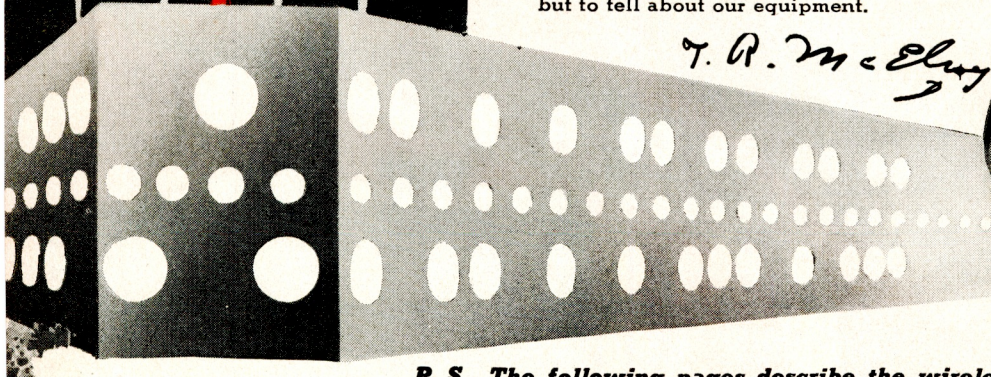

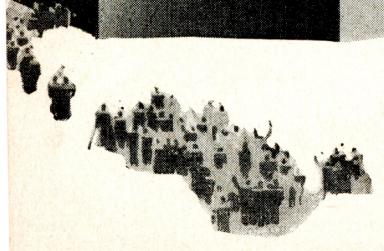

P. S. The following pages describe the wireless telegraph apparatus that we manufacture. The only thing that I can add to the pictures and descriptions of our equipment is this: "We never imitate. We never copy. We design and build. And we can deliver."

McElroy **MANUFACTURING CORP.**
82 BROOKLINE AVE., BOSTON, MASS.

WORLD'S LARGEST MANUFACTURER OF AUTOMATIC RADIO TELEGRAPH APPARATUS

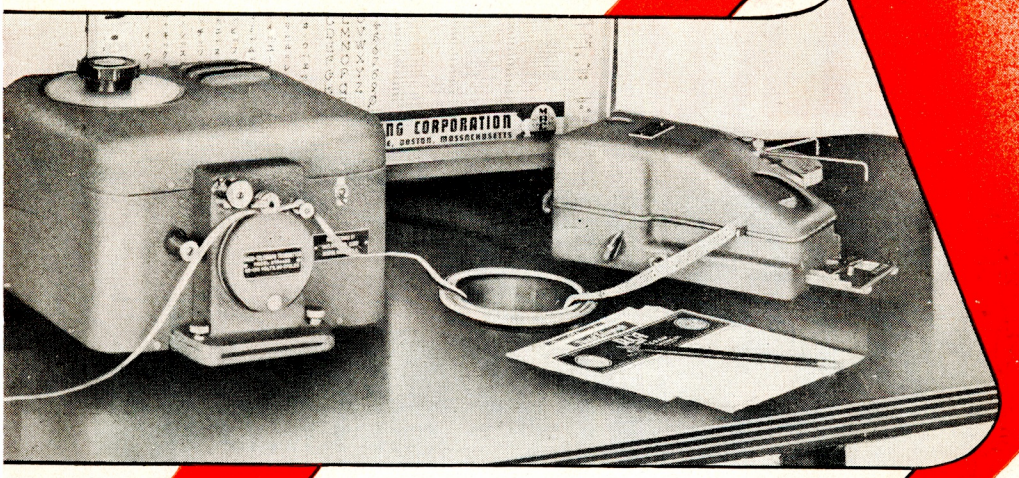

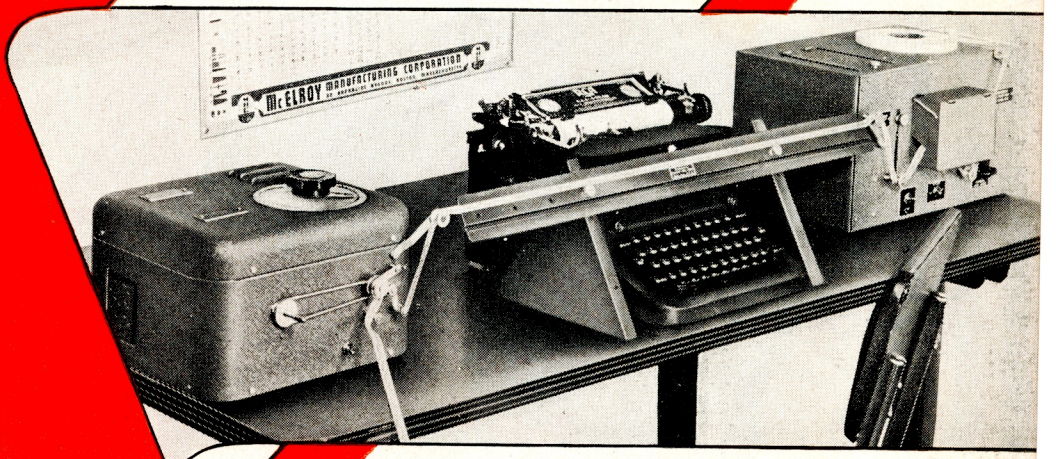

McELROY

High-Speed Automatic Radiotelegraph Assemblies

The photograph in the top panel illustrates a complete McElroy automatic transmitting assembly . . . in the lower panel you see a McElroy automatic receiving assembly. These installations are typical of the high-speed radio telegraph equipment we supply to such international companies as R.C.A. Communications, Mackay Radio, Globe Wireless, Press Wireless . . . as well as to Army and Navy services everywhere.

On the following pages, each piece of equipment is individually illustrated and described. Technical manuals and operating instructions may be secured by writing direct to us.

ARMY E NAVY

McElroy MANUFACTURING CORPORATION

82 BROOKLINE AVENUE
BOSTON, MASS.

McELROY does it again!

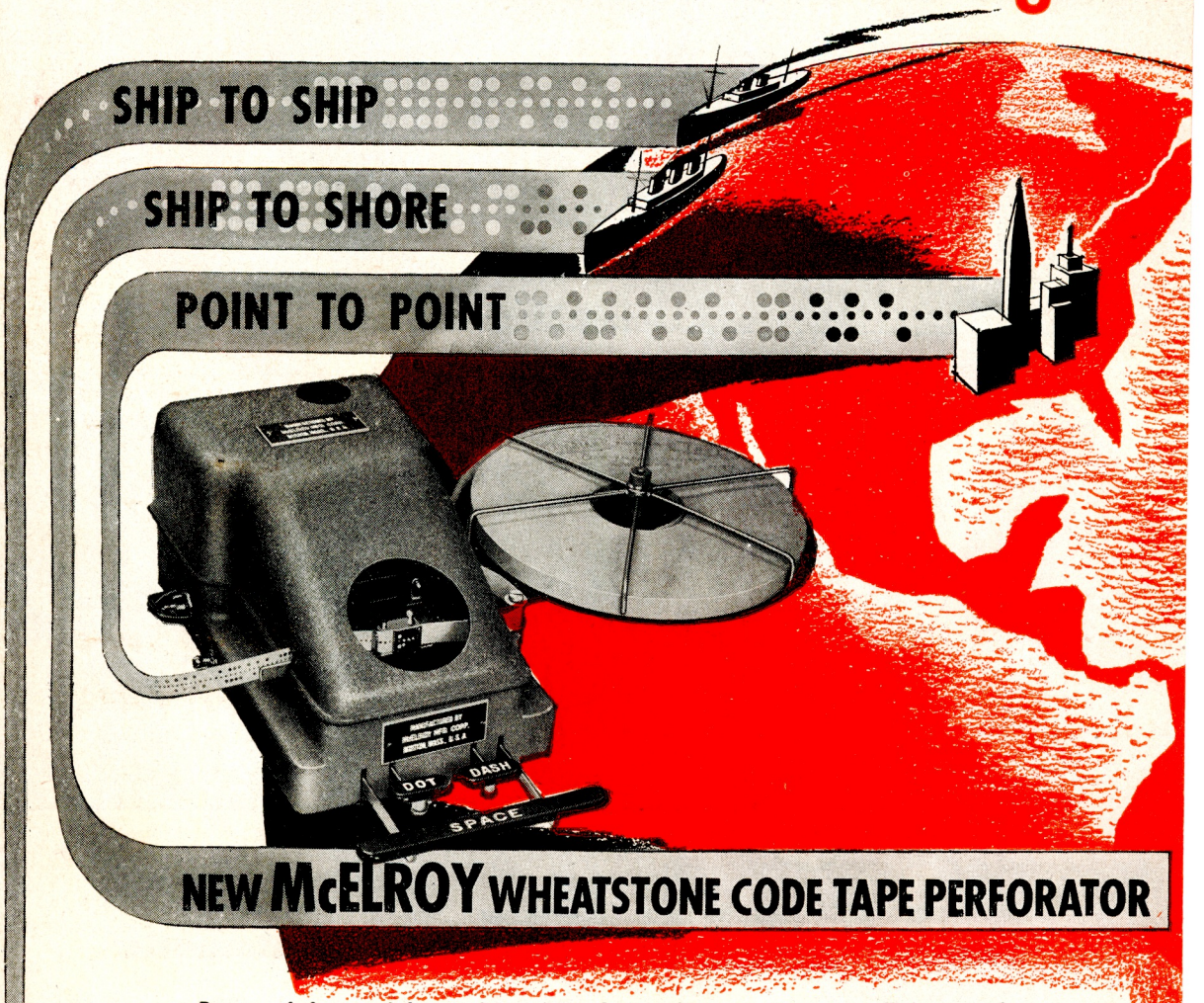

NEW McELROY WHEATSTONE CODE TAPE PERFORATOR

Aware of the need for an instrument that would provide more efficient marine radiotelegraph communications, Ted McElroy* and his creative engineers have perfected the Model PFR-443 Wheatstone Code Tape Perforator.

Speed limitations of hand sending coupled with certain restrictions of manual operation have oftimes proved costly in time, money, and lives. Now, because of precise electrical and mechanical features, this new Perforator practically eliminates the human margin of error. These prepared tapes feed through automatic radiotelegraph transmitters.

Simple to operate, the PFR-443 performs automatically or semi-automatically. Anyone with a basic knowledge of signal codes can prepare tapes cleanly and accurately at speeds up to 50 words per minute . . . not only in International Morse, but in all other codes used throughout the world. Wheatstone Perforated Tapes also serve as file records of all transmissions. Additional information may be obtained by writing to McElroy Manufacturing Corporation.

* WORLD CHAMPION RADIO TELEGRAPHER FOR MORE THAN 20 YEARS

Hasten the peace . . . keep buying war bonds

McElroy MANUFACTURING CORP.
82 BROOKLINE AVE., BOSTON, MASS

WORLD'S LARGEST MANUFACTURER OF AUTOMATIC RADIO TELEGRAPH APPARATUS



PFR-443, Wheatstone Code Tape Perforator

Well may Ted McElroy be proud of this remarkable unit. The Wheatstone Code Tape Perforator is unquestionably one of the outstanding contributions to the art of radio telegraphy. Actuated by 110 volt AC, this model PFR-443 prepares tapes cleanly and accurately at speeds up to 50 words per minute . . . for feeding through automatic transmitters.

The Wheatstone Code Tape Perforator assures perfect transmission of radio telegraph signals, thereby replacing inadequate hand-sending which often results in errors and repetition requests. Manual deficiencies contribute largely to unnecessary use of radio transmitters, with consequent congestion of the radio spectrum.

An experienced radioman is not needed to effectively operate this Perforator. Anyone with a basic knowledge of the dots and dashes comprising signal codes can prepare perfect tape for transmission . . . not only in International Morse but also in other codes used throughout the world including Japanese, Russian, Turkish, Arabic, Greek, etc.

It's extremely simple to operate. The unit is placed in position similar to a hand telegraph key, and may be operated with a feather-light touch of the index finger, middle finger and thumb of the right hand. Depressing the dot, dash or space closes electrical contacts actuating a powerful die mechanism.

This Perforator may be used fully automatic, providing a continuous series of characters, and with a variable speed control . . . or it may be operated semi-automatically to form only one character at a time.

This method of machine sending will prove of great value in improving the efficiency of radio communications on ships and at all other radio stations.

ARMY E NAVY

McElroy MANUFACTURING CORPORATION

82 BROOKLINE AVENUE
BOSTON, MASS.

new

Model XTR-442 B
Automatic Transmitter

One of Ted McElroy's proudest achievements, the new XTR-422 B Automatic Transmitter is the answer to the problem of transmissions which must be calibrated exactly in words per minute, and kept for indefinite periods at a fixed rate.

The XTR-442 B opens and closes any keying circuit to form mechanically precise signal elements, dots and dashes, in response to Wheatstone perforated tape. This unit will key either the intermediate relay of a radiotelegraph station or an audio oscillator for training radiotelegraph operators.

The auto head is operated by a rugged friction drive, powered by a heavy duty, constant speed induction motor. The speed control is calibrated directly in words per minute. The speed, in words per minute, for which the speed control is set by the operator, is absolutely constant . . . voltage fluctuations of the power, and temperature rises, do not affect the transmission rate of the unit.

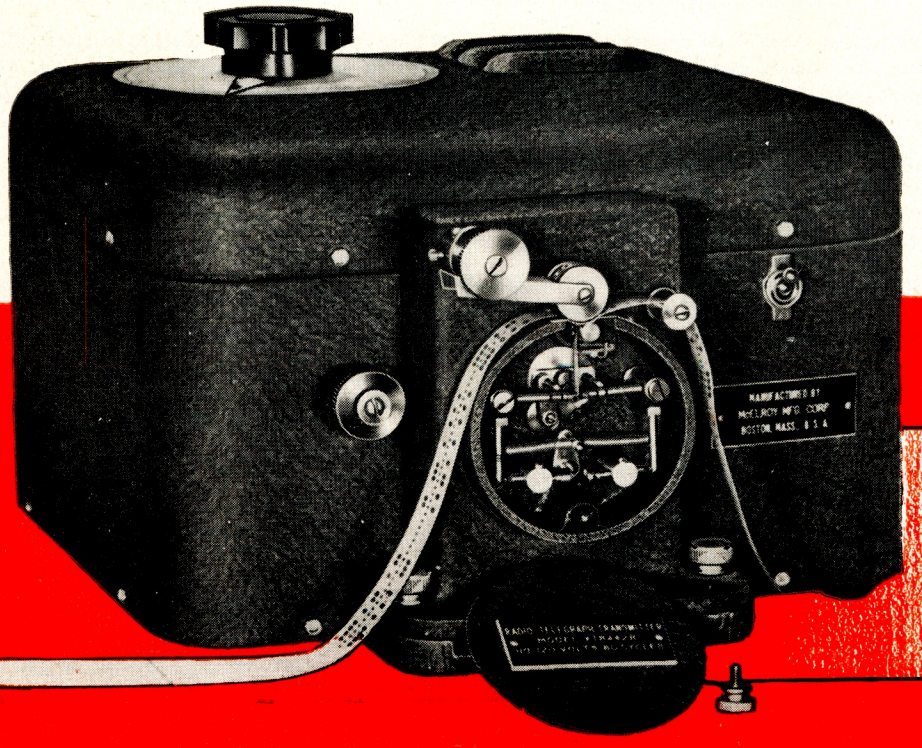

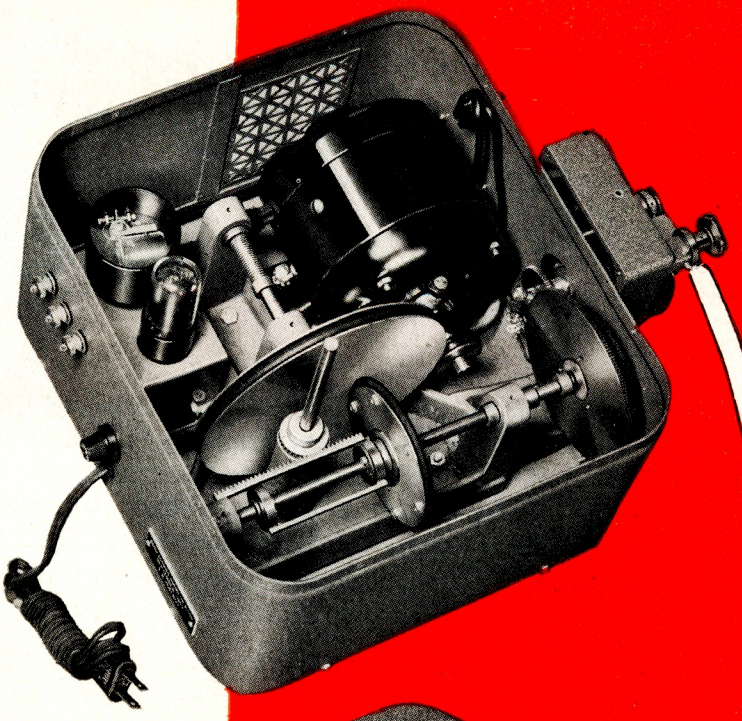



ARMY E NAVY

McElroy

MANUFACTURING CORPORATION

82 BROOKLINE AVENUE
BOSTON, MASS.

"NEVER BE SATISFIED WITH MEDIOCRITY"

From telegraph boy to head of the world's largest plant producing automatic radiotelegraph apparatus . . . is Ted McElroy's* own success saga. And the creed that drove him on—NEVER BE SATISFIED WITH MEDIOCRITY. This same spirit prevails throughout the McElroy organization where inquisitive engineers never copy and never imitate. They create, design, build . . .

Typical of the work they do is the new McELROY MODEL SR-900 SL-990 . . . a superior commercial recorder including an automatic noise limiter and signal leveller. Embodying new principles of design and operation, it will record clean, readable signals at speeds up to 350 words a minute under the most adverse conditions.

Your inquiries are invited. If a McElroy engineer can be of service to you, ask for one.

*WORLD CHAMPION RADIO TELEGRAPHER FOR MORE THAN 20 YEARS

McElroy MANUFACTURING CORP.
82 BROOKLINE AVE., BOSTON, MASS.

WORLD'S LARGEST MANUFACTURER OF AUTOMATIC RADIO TELEGRAPH APPARATUS

BUY MORE WAR BONDS



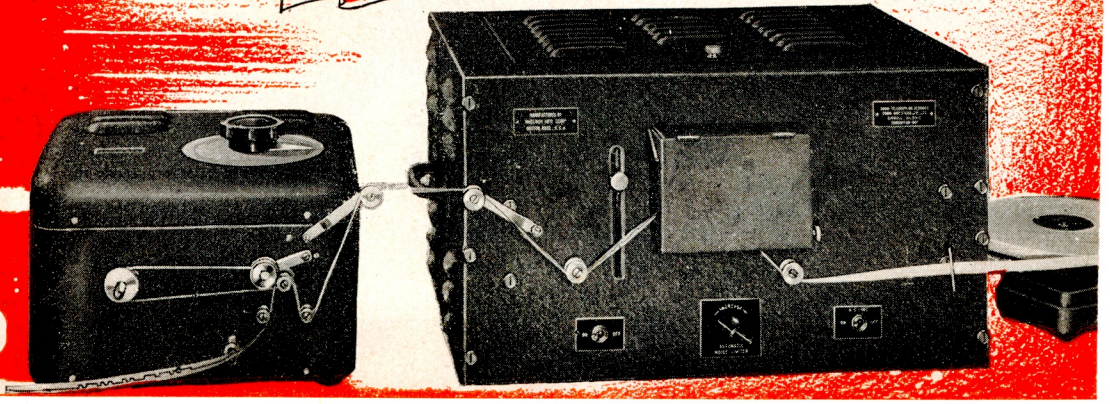

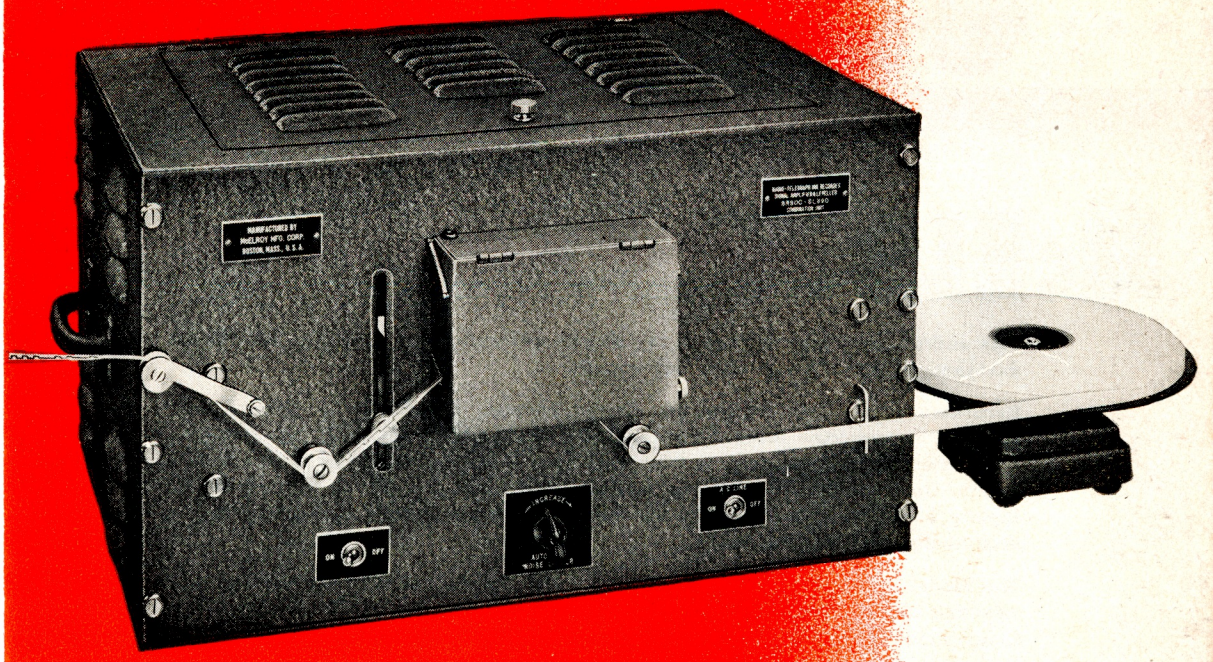

McELROY

Medium Speed Recorder-Combination
Model SR-900 SL-990

This new McElroy development is an excellent all-purpose Recorder suitable for speeds up to approximately 350 words per minute. It is a complete unit except for the Tape Puller, and is simply, yet ruggedly, designed. The circuit comprises an automatic noise limiter and signal leveller terminating in a push-pull amplifier which drives a lightweight low impedance moving coil through a heavy duty copper oxide rectifier.

Designed primarily to withstand the strain of constant operation, this model will record clean and readable signals even under most adverse conditions. It may be operated directly from the tone signal of any communication receiver . . . having a 5000 ohm or 5 to 50 ohm output. The amplifier and selector incorporated in the Recorder is capable of rejecting background noises, weaker interfering signals and static. Only the signal of the highest level is recorded.

The inkwell, mounted in the back of the panel under the cabinet cover, controls the flow of ink by being raised and lowered in a vertical position feed. This is accomplished by a control knob working through a slot on the front panel . . . and is a distinct advantage over other designs that operate with the stylus approaching the tape from a horizontal position.

Where performance and consistent dependability are the prime considerations, the Model SR-900 SL-990 Recorder should be used with the McElroy Tape Puller Model TP-890-B.

ARMY E NAVY

McElroy

MANUFACTURING CORPORATION

82 BROOKLINE AVENUE
BOSTON, MASS.

McElroy MANUFACTURING CORPORATION
82 BROOKLINE AVENUE
BOSTON, MASS.

ARMY E NAVY

McELROY High-Speed Recorder, Model SR-900-A

This entirely new recorder has many unique advantages . . . and it is specifically designed for operation at ultra-high-speeds.

Recorders of standard design are limited because signals to be recorded are required to overcome mechanical inertia. In the McElroy SR-900-A, the return of the exciter coil and ink stylus to the signal base is not dependent upon mechanical action. Consequently, there is no resistance to the movement of the ink stylus. Lightly balanced and delicately, but sturdily, pivoted, the coil and inking stylus float freely without restriction.

The Model SR-900-A operates directly from the tone signal of any radio receiver, rejecting all but the signal of the highest level, reducing the effects of interference to minimum. Background noises, weaker interfering signals and static are rejected by the amplifier and selector incorporated in this Recorder.

The inking mechanism feeds directly down with the pen recording in a vertical position, presenting a distinct advantage over other types which record with the pen touching the tape in a horizontal position. While the tape puller with adjustments for three speeds is built-in, the tape reel is mounted on the panel.

Designed to accommodate mounting in a standard radio rack, if desired, for monitoring purposes, the Recorder is nevertheless completely enclosed for table operation at high speeds. In addition, a separate pullmotor can be utilized for normal speeds when the operator desires to transcribe signals direct.

With the McElroy High-Speed Recorder, clean and readable signals are assured where other Recorders might respond with hopelessly jumbled and undecipherable copy.

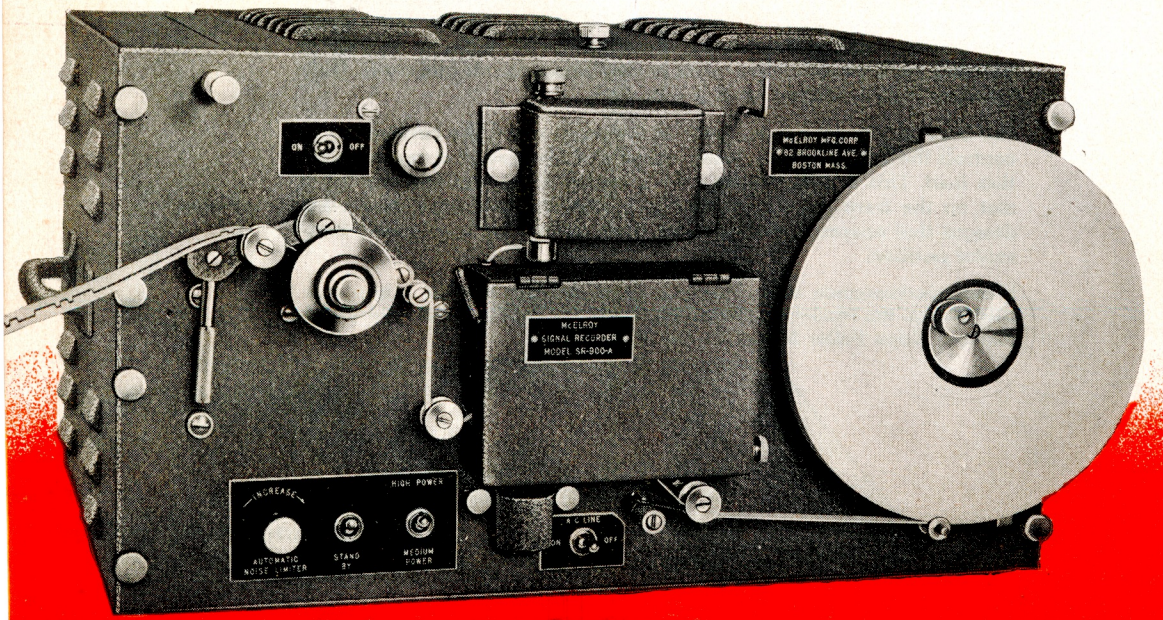

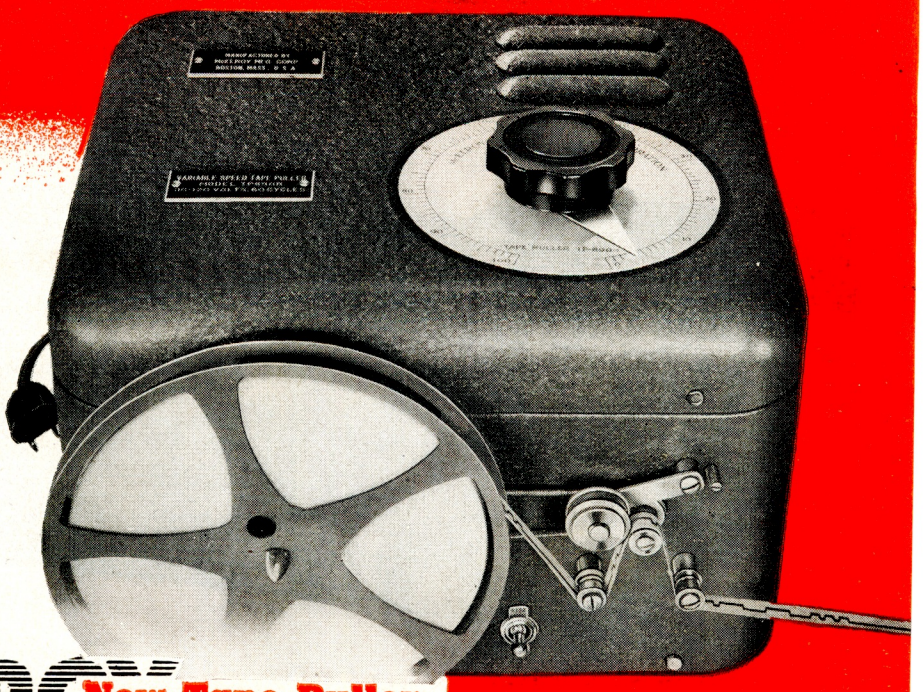

McELROY

New Tape Puller
Model TP-890 B

The new McElroy Tape Puller TP-890 B is used to give traction to standard ⅜-inch wide paper tape inked with a radiotelegraph line, and to wind the tape on standard 16mm 400-ft. motion picture reels. An outstanding advantage of this Tape Puller is its constant speed, controlled accurately from a dial, calibrated in words per minute.

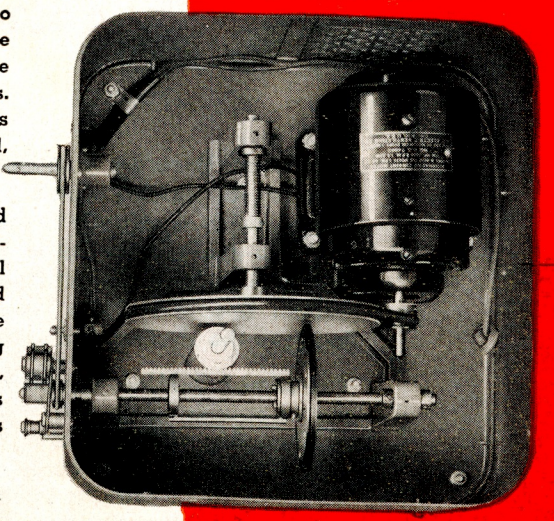

The rate at which the tape is drawn is unchanged by load differences, power line fluctuations or temperature variations. A knob, pointer and a dial graduated from 0 to 100, permit the rate to be varied within wide limits, but the rate is always the same when the pointer is returned to any given setting on the dial. The operator, without stopping the motor, can idle the tape puller so that no traction is applied to the tape, and the take-up reel does not revolve.

The unit is used with high-speed radiotelegraph recorders, school practice recorders and phototube keying units. This latest achievement by Ted McElroy and his crew of creative telegraphic engineers is another shining example of the famous McElroy tradition of creating . . . designing . . . building . . . and delivering. It will operate at maximum efficiency with a minimum of required maintenance.

ARMY E NAVY

McElroy MANUFACTURING CORPORATION

82 BROOKLINE AVENUE
BOSTON, MASS.

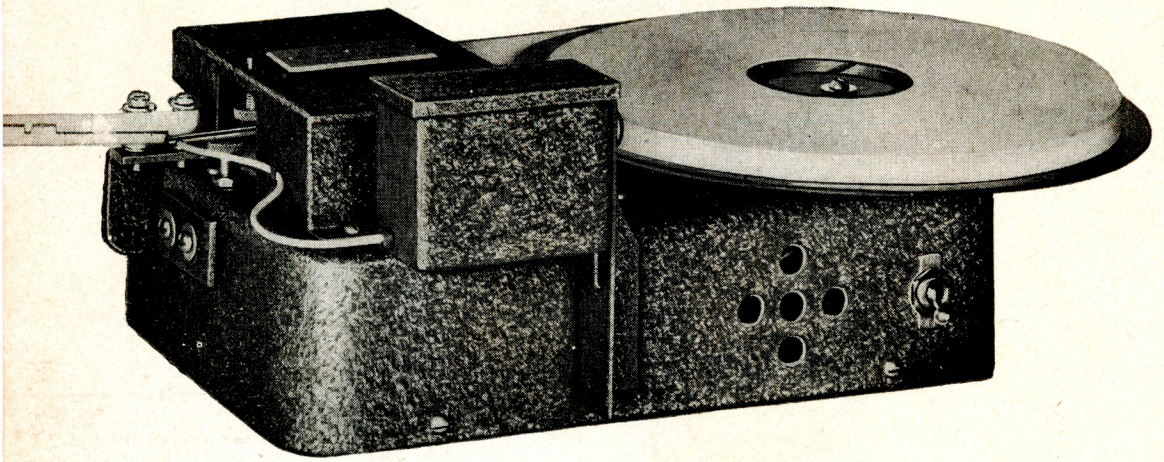

McELROY Model G-913-A School Recorder

The School Recorder is indispensable for teaching, since operators are enabled to examine actual printed examples of their own techniques. It demonstrates visually to the student any defects in his hand sending, and can also re-transmit to him accurate reproductions of the signals he has sent. With the faithfulness of a sound recording mechanism, the School Recorder offers the operator the opportunity to study and improve the rhythm and spacing of his keying.

The Model G-913-A combined with the Tape Puller TP-890B will operate at speeds up to 100 words per minute, recording clearly signals of readable strength from any radio communication receiver. It is ruggedly built but should be given the care and attention normally accorded to laboratory equipment. Properly operated, this instrument will be found trouble-free. Forty-eight of these Recorders are in daily operation, 24 hours a day, in the production of G-15-AA sets of practice tapes at our factory.

McElroy MANUFACTURING CORPORATION
82 BROOKLINE AVENUE
BOSTON, MASS.

McELROY Model G-813-A Electronic Keyer

This is another original McElroy development . . . it converts into sound the code signals which have been transcribed in ink on standard 3/8-inch paper tape at any speed chosen by the operator. The clarity and even spacing with which the signals are reproduced will assist students in rapidly mastering correctly sent code.

The Model G-813-A, used in conjunction with the Tape Puller TP-890B, continues to be the only instrument of its kind which has the outstanding practical advantage of keying only the signal line of the tape. Speed control is constant to a maximum of 40 words per minute. Tapes which undergo the effects of excessive wear will operate this unit with an efficiency which those who attempt to imitate the McElroy Electronic Keyer fail to achieve. Many other inherent advantages, brought about by McElroy developments with the photo keying unit, will continue to build widespread acceptance for the Electronic Keyer.

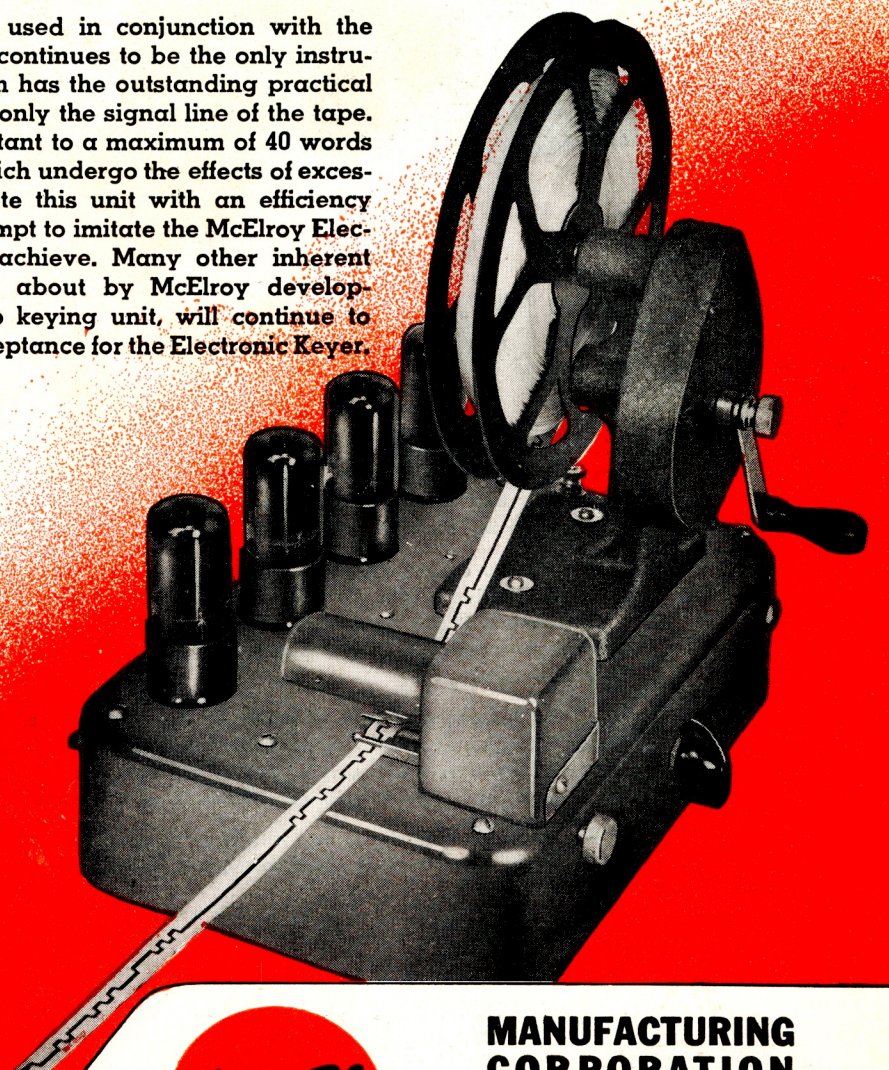

ARMY E NAVY

McElroy MANUFACTURING CORPORATION

82 BROOKLINE AVENUE
BOSTON, MASS.



McElroy Radio Beam Keyer, Model RBK-1142

The McElroy Radio Beam Keyer was developed to fill the need for a reliable instrument which would operate as a constant source of specific information , . . repeating that information in code characters at any speed within a range of from 5 to 75 words per minute.

The Keyer can be adjusted quickly for continuous and timed transmissions, without tape or other media of limited durability, of signals in any required order. In addition, it can open or close the circuit it keys for a determined length of time to provide either a period of uninterrupted silence or a dash of specified length.

The most obvious commercial applications for an instrument of this type are keying high-frequency beam transmitters for blind landings . . . keying station and frequency calls, etc. However, its adaptability to almost any requirement makes it a most flexible instrument for a multitude of other needs.

The Model RBK-1142 is designed to fit standard rack assemblies and may be mounted with the same fixtures which secure it in its sturdy, enclosed housing.

McElroy

MANUFACTURING CORPORATION

82 BROOKLINE AVENUE
BOSTON, MASS.

ARMY E NAVY

McELROY ACCESSORIES

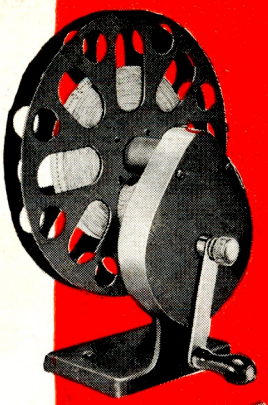

McElroy Re-winds

Compare this rugged re-wind with any of the type now available. Husky gears . . . both on shafts running through extra size oilite bearings.

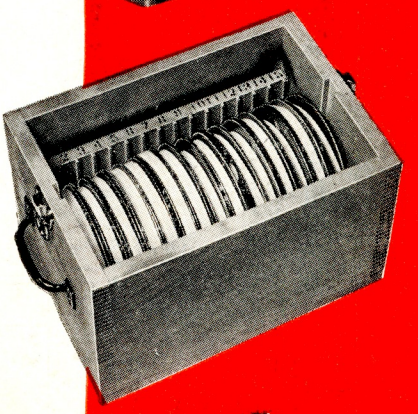

Practice Tapes

15-roll set practice tapes. G15L for sight reading; G15AA, U. S. Army tapes for photo-tube keying; G15AM American Morse tapes for telegraph sounder practice.

Tape Bridge TG-815

Provides a convenient channel across which standard 5/16- or 3/8-inch white paper tape bearing an inked radiotelegraph signal line is drawn for sight reading and typewriter transcription. Used extensively in radiotelegraph receiving stations and monitoring stations.



Operating Position Tables and Posture Chairs

Especially designed for use with high-speed automatic radiotelegraph apparatus, such as perforators, auto transmitters, recorders and tape bridges.

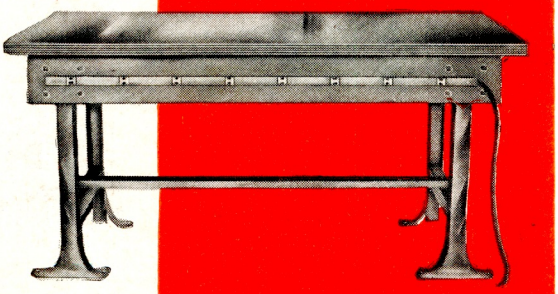

Blank Perforator and Recorder Tape, McElroy's Telegraph Blue Ink, Etc.

Tape for perforators and recorders. Ink is free-flowing, fast-drying, developed by Fred Spieske of New York, perhaps the outstanding ink specialist. Also many other miscellaneous items associated with communication equipment . . .

ARMY E NAVY

McElroy

MANUFACTURING CORPORATION

82 BROOKLINE AVENUE
BOSTON, MASS.



McELROY CHART OF CODES AND SIGNALS

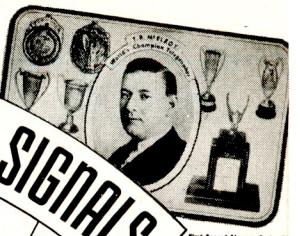

RESPECTFULLY DEDICATED TO THE RADIOMEN OF OUR ARMED FORCES AND MARITIME SERVICE

18th Anniversary Dinner-Cruise, February 11, 1940
Vatican Wireless Operators Association.

First Record 66 wpm. Boston 19
Latest Official Record 75 wpm. Asheville 1939

INTERNATIONAL FLAG SIGNALS

A — Undergoing speed trial
B — Taking on or discharging explosives
C — Yes (Affirmative)
D — Keep clear, I am maneuvering with difficulty
E — Directing course to starboard
F — Disabled, communicate with me
G — A pilot is required
H — I have a pilot on board
I — Directing course to port
J — Sending a message by semaphore
K — Stop your vessel instantly
L — Stop, something important to communicate
M — I have a doctor on board
N — No (Negative)
O — Man overboard
P — About to sail AT SEA. True lights are out
Q — Vessel healthy; I request free pratique
R — Way is off my ship; you may feel your way past
S — Going full speed astern
T — Do not pass ahead of me
U — You are standing into danger
V — I require assistance
W — I require medical assistance
X — Stop your intentions and watch for my signals
Y — I am carrying mails
Z — Used to address or call shore stations

1st Repeat
2nd Repeat
3rd Repeat

Code Pennant

INTERNATIONAL MORSE
(CONTINENTAL CODE)

LETTERS		OPTIONAL LETTERS		PUNCTUATIONS AND OTHER SIGNS	
A	·–	ä	·–·–	Period	·–·–·–
B	–···	ch	–––·	Comma	––··––
C	–·–·	é	··–··	Colon	–––···
D	–··	ñ	––·––	Question mark	··––··
E	·	ö	––––·	Apostrophe	·––––·
F	··–·	ü	··––	Hyphen	–····–
G	––·			Fraction bar	–··–·
H	····	FIGURES		Brackets	–·––·–
I	··	1	·––––·	Double hyphen	–····–
J	·–––	2	··–––	Underline	··––·–
K	–·–	3	···––	Understood	···–·
L	·–··	4	····–	Error	·····
M	––	5	·····	End of message	···–·–
N	–·	6	–····	Invitation to transmit	–·–
O	–––	7	––···	Wait	·–···
P	·––·	8	–––··	End of work	···–·–
Q	––·–	9	––––·	Starting signal	–·–·–
R	·–·	0	–––––	Separation signal	–···–
S	···	FIGURES IN ROUTINE REPETITIONS		*Semicolon	–·–·–·
T	–	1	·–––	*Quotation mark	·–··–·
U	··–	2	··–––		
V	···–	3	···––		
W	·––	4	····–		
X	–··–	5	·····		
Y	–·––	6	–····		
Z	––··	7	––···		
		8	–––··		
		9	––––·		
		0	–––––		

Numerals and punctuation marks are the same in the codes for all languages.
*Non official but in general use.

COMMERCIAL "Z" SIGNALS

Signals take the form of entries when question mark is omitted. These signals are used on commercial radiotelegraph circuits throughout the world.

ZAL	Alter your ownership.	ZTA	Transmit by auto.
ZHC	How are you receiving conditions?	ZBT	Break, go back and stand by. (Navy.)
ZAN	My ear drums absolutely ruptured.	ZBN	Break, I am ahead with new ship.
ZSU	Your signals are unreadable.	ZPR	Return ship at present running.
ZWR	Your signals need fast variation.	ZBL	Return ship before sea now running.
ZSR	Your signals strong—variable.	ZPP	Punch paper only.
ZGU	Signals good for ——— o'clock.	ZTB	Transmit by trailing loops.
ZGS	Your signals getting stronger.	ZYA	Taking note.
ZGW	Your signals getting weaker.	ZRA	Received audio tone.
ZVS	Signals varying in intensity.	ZTS	What is your speed of transmission?
ZSH	Static heavy here.	ZSV	Your speed varying.
ZLS	Signals suffering from a lightning storm.	ZBS	Your signals blurring.
ZWC	Wipers or slides here.	ZDH	Your date on last heavy (long) adjust.
ZVF	Send it's pleasure.	ZDL	Your date on last light (short) adjust.
ZWO	Send words once.	ZDM	Your date on last medium adjust.
ZWT	Send words twice.	ZDV	Your date on last variable adjust.
ZCT	Send code twice.	ZFS	Signals are fading slightly.
ZPO	Send your service.	ZTH	Transmit by hand.
ZPT	Send your twice.	ZHS	Send high speed auto ——— prep.
ZCD	Your collation is different.	ZSO	Transmit slow once.
ZCO	Your collation correct.	ZST	Transmit slow twice.
ZSF	Send faster.	ZOR	Transmit two continuously.
ZSS	Send slower.	ZLB	Give long breaks, please.
ZRO	Are you receiving all?	ZUB	We have been unable to break you.
ZOR	We are receiving all.	ZNB	We have not yet seen you, but will do so.
ZIR	Your transmitter has strong site radio interference.	ZLD	We are getting long dash from you.
ZRC	Can you receive code?	ZAP	Acknowledge, please.
ZNG	Receiving conditions good for code.	ZMQ	Send to for ———
ZNN	All clear of traffic.	ZNR	Send to moment.
ZHT	We are getting your ———	ZKQ	Say when ready to receive.
ZCS	Cease sending.	ZOH	What traffic have you on board?
ZMP	Mispunch or perforator failures.	ZNF	Signals receiving and keeping.
ZCW	We are in strong communication with ———	ZFF	Signals receiving and keeping from trade code ——— and frequency. Binoculars. We have checked transmitter call for ——— Signals are ———
ZHA	How are your conditions for duty re: ———	ZOA	Transmitting on air ok.
ZUA	Your conditions unsuitable for publication or economic recording.	ZCP	Your conditions poor; please increase to maximum.

AERONAUTICAL "Q" SIGNALS

Used Especially in Airways Communications by Authority of the FCC.

QAA	At what time do you expect to arrive at ———	QBC	Can you transmit to me the remaining ——— groups of my message? Send ——— groups.
QAB	What is the visibility at ———	QBE	I am also: to send in my aerial.
QAC	Are you receiving me ———	QBF	Are you fix (cycle-chart)
QAD	Are you receiving me and will you keep ——— space at department?	QBG	Are you fix: store-chart
QAE	Are you receiving me and will you keep ——— space at ———	QBH	Are you flying below cloud
QAF	At what time did you pass ———	QBI	Are you receiving signatures are in ———
QAG	Arrange with Flight in order to arrive at ——— at ———	QBJ	At what hour — the upper limit of ———
QAH	What is your height	QBM	Has ——— sent a message for me?
QAI	Has my ground been cancelled in the ———	QBN	Are you flying between two layers of ———
QAJ	Shall I try to search for an aircraft in the ——— or for any other object	QBT	You are receiving your code
	Shall I try to search for aircraft	QBU	Are you sure of the accuracy of your ———
	Shall I try to search for aircraft	QBW	Have you received Program sent at ———
QAK	Is another aircraft flying in my vicinity	QCA	You are causing delay by answering ———
	Is another aircraft flying in my vicinity	QCB	You are causing delay by answering
QAL	Are you going to land at ———	QCG	Shall I send parcels for you on the ———
QAM	Can you give me the latest meteorological report for ———	QCM	Three words to be a dozen in your ———
QAN	Can you give me the mean ———	QCP	Your name is bad.
	Can you give me the mean ———	QCS	Telephone no long-wave has broken down.
	Can you give me the mean ———	QCT	Interception on short waves has broken down.
QAO	Can you give me the ———	QCY	Wait on trailing aerial. Off
QAP	Shall I listen on the ———	QDB	Wait on trailing aerial. On
QAQ	Am I in the vicinity of a prohibited ———	QDC	Telegram ——— has been sent by wire.
QAR	Are you ready to receive ———	QDD	Telegram No. ——— has been refused by ———
QAS	Are you flying in the vicinity of prohibited areas	QDH	What is causing the present ———
QAT	Shall I continue to send?	QDK	Answer in the alphabetical order of the ———
QAX	Have you in your aircraft the following ———	QDL	No delay expected in ———
	Have you in your aircraft the following radiotelegraph? Have ———	QDM	Do not send to me or to any other ———
	Have you in your aircraft the following ———	QDO	Can you have transmitted by ———
QAZ	Are you flying in a thunderstorm?		Can you have transmitted by ———
QBA	What is the visibility at ———		Can you have transmitted by ———
QBB	What is the height of the cloud base at ———	QDR	What is my magnetic bearing (variation) from ———

(Complete code available on request)

Certain other codes and signals are omitted because of present day restrictions.

AMERICAN MORSE

A	·–	1	·–––
B	–···	2	··–––
C	–·–·	3	···––
D	–··	4	····–
E	·	5	·····
F	··–·	6	–····
G	––·	7	––···
H	····	8	–––··
I	··	9	––––·
J	·–––	0	–––––
K	–·–		
L	·–··	Period	·–·–·–
M	––	Comma	––··––
N	–·	Hyphen	–····–
O	–––	Question mark	··––··
P	·––·	Exclamation mark	–·–·–·
Q	––·–	Colon	–––···
R	·–·	Parenthesis	–·––·–
S	···	Quotation	·–··–·
T	–	End of quotation	·–··–·
U	··–	Colon dash	–···–·
V	···–	Capitalized letter	·––·–
W	·––	Small letter	·––––
X	–··–	Colon followed by numbers	–····
Y	–·––	Semicolon	–·–·–·
Z	––··	Paragraph	·–––
&	·–···	Apostrophe	·––––·
		Dollar	···–··–
		Cents	–·–·–
		Pound Sterling	·––·–
		Shilling	–··–·
		Percent	–·––·

Punctuation composed by Walter P. Phillips in 1876. He also made a compilation of five letter abbreviations of about 2000 commonly used words. This "Phillips Code" is used by newspaper telegraphers.

SEMAPHORE CODE

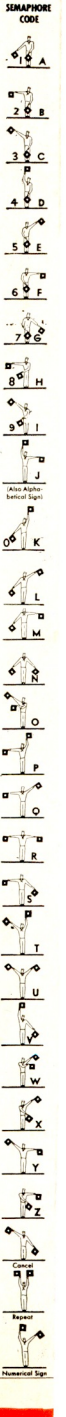

GREEK

LETTER	CAPS	WORD SYMBOL
A	·–	Alpha
B	–···	Beta
Γ	––·	Gamma
Δ	–··	Delta
E	·	Epsilon
Z	––··	Zeta
H	····	Eta
Θ	–·–·	Theta
I	··	Iota
K	–·–	Kappa
Λ	·–··	Lambda
M	––	Mu
N	–·	Nu
Ξ	–··–	Xi
O	–––	Omicron
Π	·––·	Pi
P	·–·	Rho
Σ	···	Sigma
T	–	Tau
Y	·–·–	Ypsilon
Φ	··–·	Phi
X	––––	Chi
Ψ	––·–	Psi
Ω	·––	Omega
HY	····	Eta Ypsilon
YI	·––·	Ypsilon Iota
OY	–––	Omicron Ypsilon
AI	·–·–	Alpha Iota
AY	·–––·	Alpha Ypsilon
EY	·––··	Epsilon Ypsilon
OI	–––	Omicron Iota

RUSSIAN

RUSSIAN LETTER	WORD SYMBOL	
А	·–	A
Б	–···	B
В	·––	V
Г	––·	G
Д	–··	D
Е,Э	·	E
Ж	···–	J
З	––··	Z
И	··	I
Й	·–––	Y
К	–·–	K
Л	·–··	L
М	––	M
Н	–·	N
О	–––	O
П	·––·	P
Р	·–·	R
С	···	S
Т	–	T
У	··–	U
Ф	··–·	F
Х	––––	KH
Ц	–·–·	TS
Ч	––––·	CH
Ш	···–	SH
Щ	––·–	SHCH
Ъ,Ь	–··–	Mute
Ы	–·––	I
Ю	··––	YU
Я	·–·–	YA

POSTAL TELEGRAPH — WESTERN UNION PHONETIC ALPHABET

Adams	Henry	Queen	Union
Boston	Ida	Peter	Victor
Chicago	John	Queen	William
Denver	King	Robert	X-ray
Edward	Lincoln	Sugar	Young
Frank	Mary	Thomas	Zero
George	Newyork		

THE McELROY METHOD
FOR TRANSCRIPTION OF RADIO TELEGRAPH SIGNALS

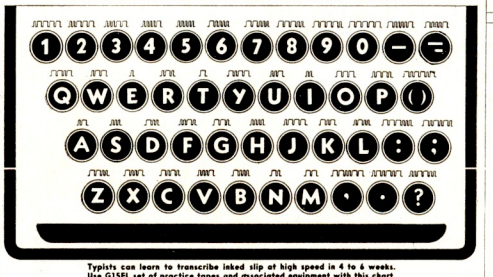

Typists can learn to transcribe inked slip at high speed in 4 to 6 weeks.
Use G1SFL set of practice tapes and associated equipment with this chart.

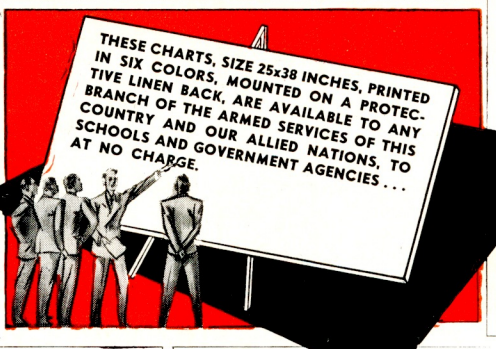

ARABIC

LETTER	ARABIC SYMBOL	WORD SYMBOL
ا	·–	Alif
ب	–···	Ba
ت	–	Ta
ث	····	Tha
ج	·–––	Jeem
ح	····	Ha
خ	–––	Kha
د	–··	Dal
ذ	–···	Dhal
ر	·–·	Ra
ز	····	Zay
س	···	Seen
ش	····	Sheen
ص	····	Sad
ض	····	Dad
ط	····	To
ظ	····	Za
ع	·–	Ain
غ	·––·	Ghain
ف	··–·	Fa
ق	––·–	Qaf
ك	–·–	Kaf
ل	·–··	Lam
م	––	Meem
ن	–·	Noon
ه	····	He
و	·––	Wa
ي	··	Ya
ـــ	·–·–·	Lam-Alif

TURKISH

A	·–
B	–···
C	–·–·
Ç	·–··
D	–··
E	·
F	··–·
G	––·
H	····
I	··
J	·–––
K	–·–
L	·–··
M	––
N	–·
O	–––
Ö	·––·
P	·––·
R	·–·
S	···
Ş	····
T	–
U	··–
Ü	··––
V	···–
Y	–·––
Z	––··

U. S. ARMY AND U. S. NAVY PHONETIC ALPHABET

Able (Affirm)*	How (Hqtrs)*	Oboe (Option)*
Baker	Inter	Peter (Prep)*
Charlie (Cast)*	Jig	Queen
Dog	King	Roger
Easy	Love	Sugar (Suit)*
Fox	Mike	Tare
George	Nan (Negat)*	Victor
		William
		X-ray
		Yoke
		Zebra (Zed)*
		Uncle (Unit)*

* Used on applicants in army procedure.
** In service transmitted How (H) to avoid confusion with letter N.

JAPANESE MORSE
(SOMETIMES REFERRED TO AS KATA KANA RADIO CODE)

	A	KA	SA	TA	NA	HA	MA	YA	RA	WA
	ア	カ	サ	タ	ナ	ハ	マ	ヤ	ラ	ワ
	I	KI	SHI	TI	NI	HI	MI	I	RI	(W)I
	イ	キ	シ	チ	ニ	ヒ	ミ	イ	リ	ヰ
	U	KU	SU	TU	NU	HU	MU	YU	RU	U
	ウ	ク	ス	ツ	ヌ	フ	ム	ユ	ル	ウ
	E	KE	SE	TE	NE	HE	ME	E	RE	(W)E
	エ	ケ	セ	テ	ネ	ヘ	メ	エ	レ	ヱ
	O	KO	SO	TO	NO	HO	MO	YO	RO	WO
	オ	コ	ソ	ト	ノ	ホ	モ	ヨ	ロ	ヲ
	N	HYPHEN	PERIOD	BRACKETS	QUOTES	PARAGRAPH	QUESTION MARK			
	ン	—	。	「」	〝〝	¶	？			

GOVERNMENT PRESCRIBED PRINTING

(ONE CAPTURE MESSAGES AT FIELD STATIONS WITH MANUAL HAND PUMP)

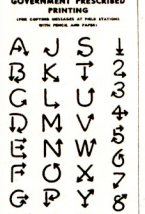

"Q" SIGNALS

(THE SIGNALS TAKE THE FORM OF ADVICES WHEN THE QUESTION MARK IS OMITTED)
Specially developed for ship radiotelegraph communications. They are now used in all radiotelegraph services.

QRA	What is the name of your station?	QRZ	Who is calling me?
QRB	How far approximately are you from my station?	QSA	What is the strength of my signals (1 to 5)?
QRC	What company (or State Administration) owns the vessels (or your station)?	QSB	Does the strength of my signals vary?
QRD	Where are you bound and where are you coming from?	QSC	Is my timing correct; are my signals distinct?
QRE	Will you tell me my exact frequency (wave length) in kc (or m)?	QSD	What is wrong with my signals; my touch?
QRF	Does my frequency (wavelength) vary?	QSE	Can you receive me (station) direct?
QRG	Is my note good?	QSF	Shall I send faster?
QRH	Do you receive me faster? Are my signals weak?	QSG	Can you give me acknowledgment of receipt?
QRK	What is the readability of my signals (1 to 5)?	QSH	Shall I send faster?
QRL	Are you busy?	QSI	Can you communicate with ——— direct (or through the medium of)?
QRM	Are you being interfered with?	QSJ	Will you transmit to ——— free of charge?
QRN	Are you troubled by atmospherics?	QSK	Are you receiving me between your signals and if so can I break in on your transmission?
QRO	Shall I increase power?	QSL	Will you send me your verification?
QRP	Shall I decrease power?	QSM	Shall I send each message twice?
QRQ	Shall I send faster?	QSN	Did you hear me (or ———) on your frequency?
QRS	Shall I send more slowly?	QSO	Can you communicate with ——— direct (or through the medium of)?
QRT	Shall I stop sending?	QSP	Will you relay to ——— free of charge?
QRU	Have you anything for me?	QSQ	May I change to transmission on another wave?
QRV	Are you ready?	QSR	Shall I change to transmission on another frequency?
QRW	Shall I tell ——— that you are calling him on ——— kc (or m)?	QSS	What working wave will you use?
QRX	When will you call me again?	QST	General call preceding a message addressed to all stations
QRY	What is my turn?	QSU	Shall I send or reply on this wave (or on ——— kc (or m)) (A1, A2, A3 or A4)?
		QSV	Shall I send a series of VVV?
		QSW	Will you send on this wave (or on ——— kc (or m)) (A1, A2, A3 or A4)?
		QSX	Will you listen for ——— on ——— kc (or m)?
		QSY	Shall I change to transmission on another wave (or on another frequency)?
		QSZ	Shall I send each word or group twice?
		QTA	Shall I cancel message number ——— as if it had not been sent?
		QTB	Do you agree with my number of words?
		QTC	How many telegrams have you to send?
		QTE*	What is my true bearing (or that of ——— from you?
		QTF	Will you indicate the position of my station according to bearings taken by the radiogoniometric stations?
		QTG	Will you give me the position of my station as determined by the radiogoniometric stations?
		QTH	What is your position in latitude and longitude (or according to any other indication)?
		QTI	What is your true course?
		QTJ	What is your speed?
		QTM	Send radiodirection signals and submarine sound signals for taking a bearing (or series of bearings) on me
		QTO	Have you left dock (or port)?
		QTP	Are you going to enter dock (or port)?
		QTQ	Can I communicate with the station by means of the International Code of Signals?
		QTR	What is the exact time?
		QTU	What are the hours during which your station is open?
		QUA	Have you news of ——— (last sign of the vessel)?
		QUB	Can you give me, in the following order, information concerning: visibility, height of clouds, ground wind direction and velocity, sea conditions, swell direction, period and height?
		QUC	What is the last (or first) message received by you?
		QUD	Have you received the urgency signal sent by ———?
		QUE	Can you speak in ———?
		QUF	Have you received the distress signal sent by ———?
		QUG	Are you forced to watch for the next ——— hours?
		QUH	Will you indicate the present barometric pressure?
		QUI	Are the following signals received by you clearly?
		QUJ	What are the bearings (or true bearings) of my signals?
		QUK	What is the present sea condition?
		QUL	Have you sighted any ship which appears in distress?
		QUM	Is the distress traffic ended?

* To certain aeronautical services true course and true bearing are called "geographic course" and "geographic bearing".

COPYRIGHT 1947, T. A. McELROY, BOSTON. REPRODUCTION PROHIBITED

McELROY MANUFACTURING CORPORATION
82 BROOKLINE AVENUE, BOSTON, MASSACHUSETTS

SCR-299
RIDES THE CREST OF THE INVASION WAVE!

The SCR-299 helped pave the way for the Allies in the Mediterranean theatre from El Alamein to Italy. In Africa alone it operated on five networks, including circuits from Oran to England, Casablanca, Gibraltar, Algiers and Accra. On whatever front the Allies are fighting, the SCR-299 will be a familiar sight to our fighting men.

Whether set up as a fixed radio station or used as a fast-moving mobile unit, the SCR-299 has done an excellent job transmitting commands while in action, no matter how difficult the conditions . . . thus proving that communications systems were adaptable to the "Blitz" tactics of modern warfare.

The World's Largest Exclusive Manufacturers of Short Wave Radio Communications Equipment

the hallicrafters co.

CHICAGO, U.S.A.

BUY MORE BONDS!





BUY MORE BONDS!

the hallicrafters co.
CHICAGO, U.S.A.

MAKERS OF

EREVER THEY FIGHT!



Wherever our troops fight throughout the world, the SCR-299 is seeing service! Designed for instantaneous and continuous service as a fixed or mobile radio station, the high powered mobile transmitter built by Hallicrafters has distinguished itself in the Pacific with MacArthur and with the Allies in the Mediterranean.

The SCR-299 fought in the jungles of Guadalcanal and was flown into China where it is fighting with General Stilwell.

THE FAMOUS SCR-299 COMMUNICATIONS TRUCK

BEST EQUIPPED FIGHTING FORCE

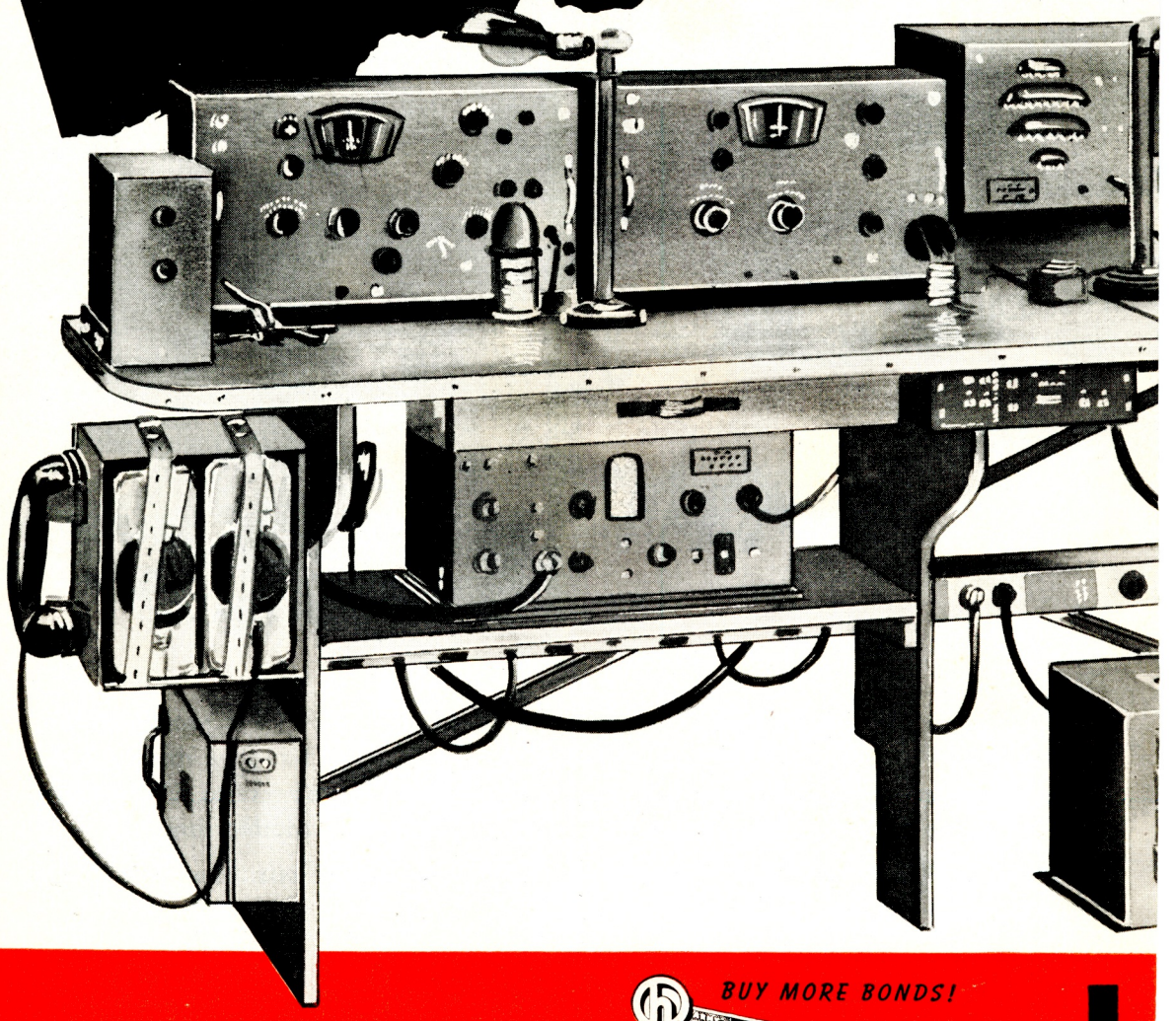

BUY MORE BONDS!

40

the h

MAKERS OF THE FAMOUS SCR-299

The U. S. Army Signal Corps are world leaders in Military Communications . . . their equipment must be the finest that electronic research can produce.

The equipment for the SCR-299 is designed to withstand every climatic condition and give instantaneous and continuous performance under the most extreme conditions.

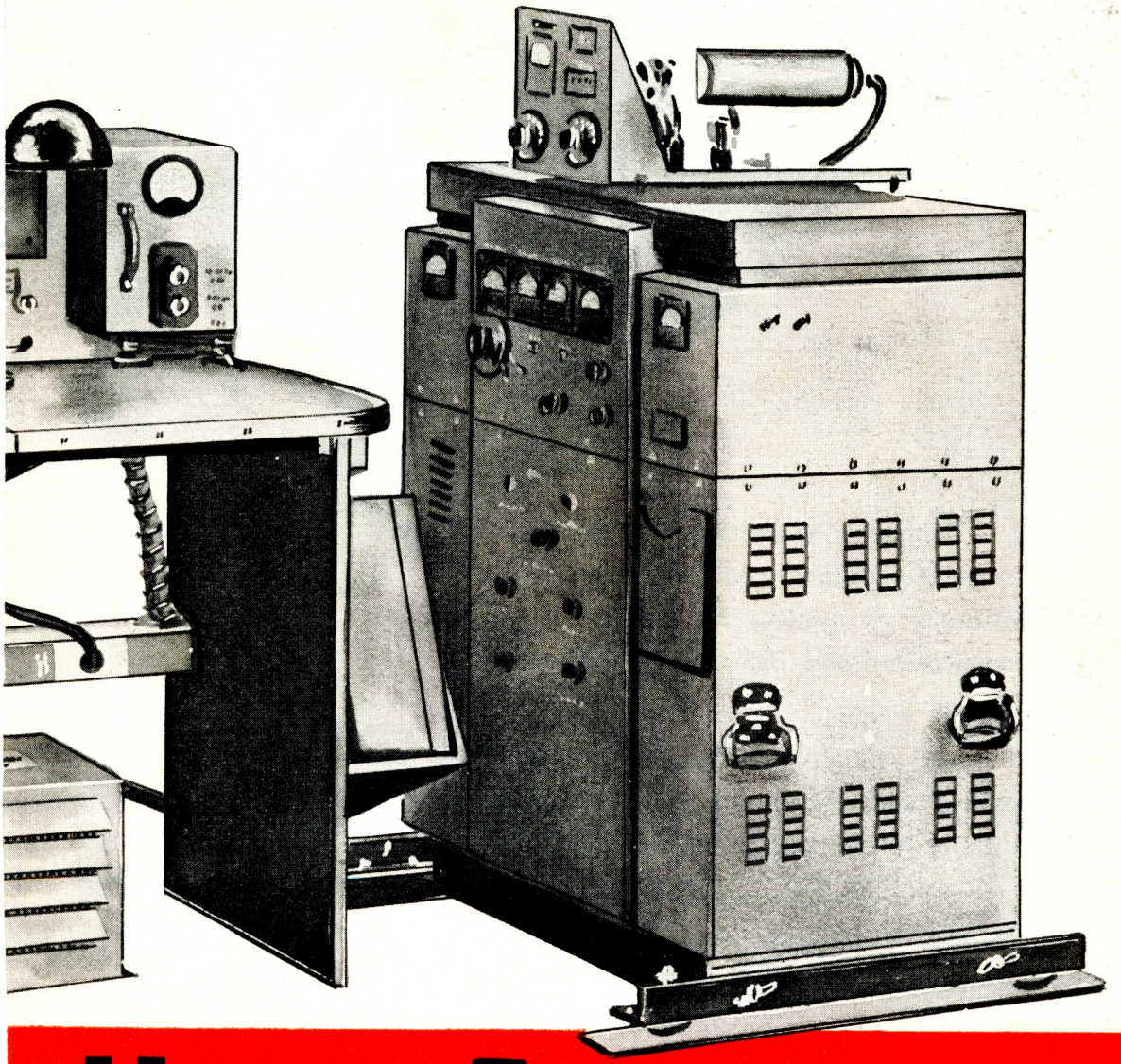

allicrafters co.

COMMUNICATIONS TRUCK

BUILT FOR PEACE . . . FIGHTING FOR PEACE!

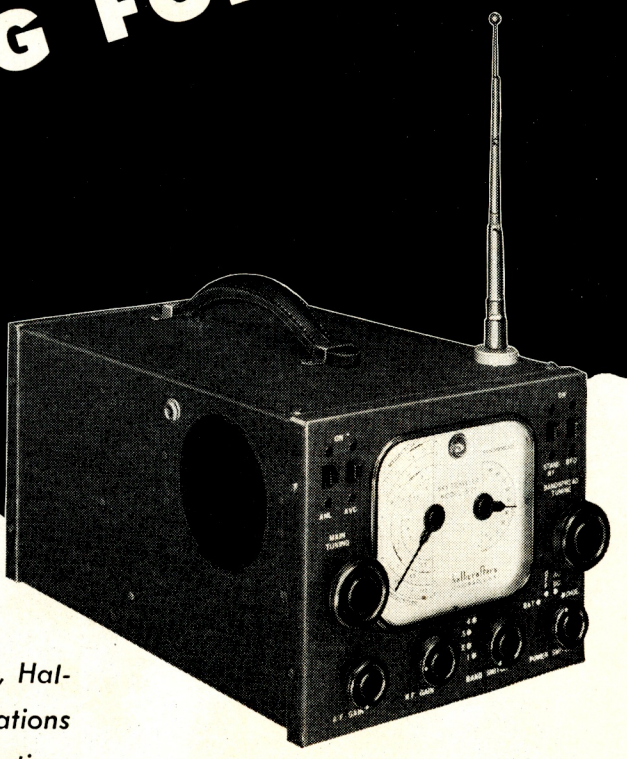

Without a single revision, Hallicrafters peacetime communications equipment is meeting the wartime qualifications and demands of the Military!

Under the abnormal climatic and operating conditions of war, Hallicrafters Communications equipment is providing peak performance for the Allied armed forces, fighting throughout the world.

Just as Hallicrafters Communications receivers are meeting the demands of war Today—they shall again deliver outstanding reception for the Peace—Tomorrow!

WORLD'S LARGEST EXCLUSIVE MANUFACTURER OF SHORT WAVE RADIO COMMUNICATIONS EQUIPMENT

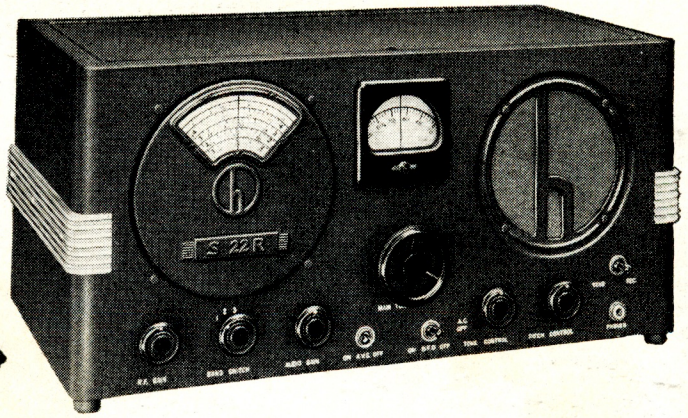



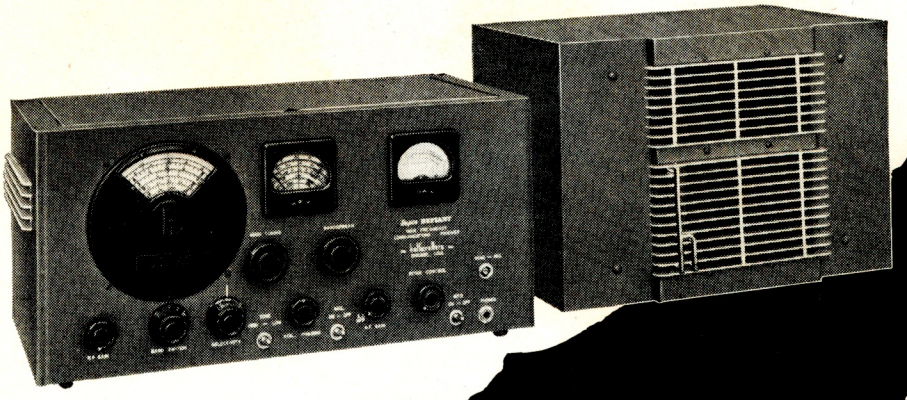

BUY
MORE
BONDS!

the hallicrafters co.
CHICAGO, U.S.A.

. . . . AND EVEN GREATER TOMORROW!

The SX-28 is the most popular of all Hallicrafters communications receivers. It reflects Hallicrafters supremacy in the communications field through its top quality performance with our armed forces.

NOW . . . and even greater TOMORROW, shall be its popularity and supremacy in civilian uses, because of the many important engineering advancements being made for better performances!



the hallicrafters co.

CHICAGO, U.S.A.

WORLD'S LARGEST EXCLUSIVE MANUFACTURER OF SHORT WAVE RADIO COMMUNICATIONS EQUIPMENT

FOR THE WAR . . . *and after*

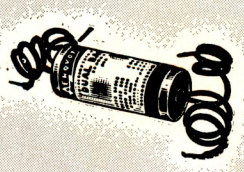

"Dandees" are meeting most wartime electrolytic requirements. PBS single-section units. 25 to 450 v. Also dual-section PRS-A concentrically-wound, three leads, and PRS-B separate-section, four leads. Polarity-indicating colored leads.



Metal-case paper condensers may still be available in some types, such as Type 1080, 1000 v., .5 to 4 mfd. Also the stamped-metal-case '60, in 200 and 400 v., and particularly the uncased paper sections Type UC, 400 to 1000 v.

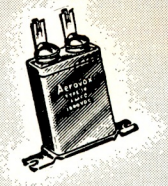

Oil-filled capacitors still available against high priorities. Type '16 upright or inverted mounting, 400 to 1000 v. Also Type '30 "bathtub" for flat mounting with terminals on top, bottom or side, 400, 600 and 1000 v.



Oil-filled transmitting capacitors are available on high priorities. In addition to large round-can '05, there is the inverted-screw-mounting '10 type with new double-terminal feature. Also rectangular-can '09 in voltages up to 7500, and '20 series up to 50,000 v.



● These "Victory" Type '05 oil-filled transmitting capacitors are typical of the Aerovox line in wartime dress. The ribbed steel can, finished in battleship gray lacquer, replaces the former aluminum can. A substitute, yes, but just as tough as ever for wartime service.

No matter where this war may take you, whether on the fighting front, production front or home front, you can continue to count on Aerovox for essential capacitors. For no matter what shortages may develop, no matter what types may become unavailable, Aerovox engineers will have a "Victory" type—a satisfactory substitute just for the duration.

Ask your Aerovox jobber for the "Victory" catalog. Ask for free subscription to the monthly Aerovox Research Worker. Or write direct.

AEROVOX *Capacitors*

INDIVIDUALLY TESTED

AEROVOX CORP., NEW BEDFORD, MASS., U. S. A.
In Canada: AEROVOX CANADA LTD., HAMILTON, ONT.
Export: 100 VARICK ST., N. Y. C. • Cable: 'ARLAB'

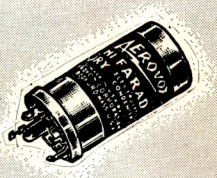

Aluminum-can electrolytics, still available in certain types, especially on high-priorities. Prong-base F type is typical of extensive Aerovox electrolytic line. Wherever possible, substitute Dandees or cardboard-case PBS.



Tubular paper condensers Type '84 will be found highly satisfactory for most functions. Highly refined construction including extra-heavy-waxing insures excellent performance and life. 400 to 1600 v.

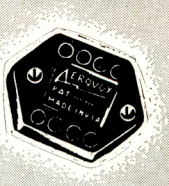

Mica capacitors are mighty scarce. Available only on highest priorities, whether it be the tiny molded-in-bakelite capacitors or the large bakelite-case medium-duty units.

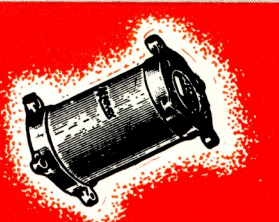

Heavy-duty transmitting and electronic requirements are met by the stack-mounting 1550 series units, and also the cast-aluminum-case 1870. Ultra-high-frequency requirements are met by the sulphur-filled 1860 series. Available on high priorities.

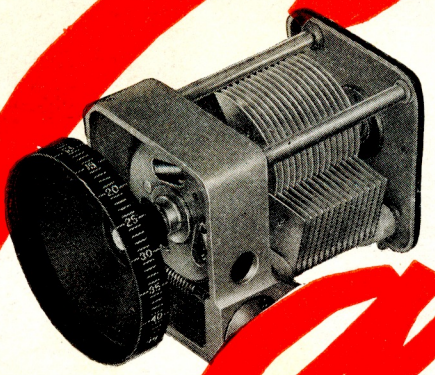

At Cardwell, we deal with truisms. Here . . . fresh, sound, original designs are combined with materials of merit, and collated by skilled craftsmen . . . for use in practically every type of communications equipment . . . amateur, commercial, and military.

Material things, however, are not sufficient to make Cardwell condensers the quality products that they are. Into them go an additional ingredient—a heritage of pioneering, patience, and judgment.

Cardwell

. . . THE CONDENSER LINE WITH BUILT-IN HERITAGE

NEW TRIM-AIR MIDGET CONDENSERS

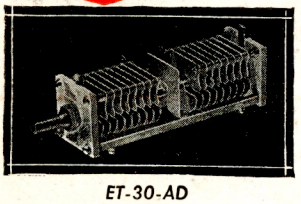

ET-30-AD

"TRIM-AIR" Accessories:

Trim-Air singles are equipped for single hole mounting. Dual Trim-Airs for single hole or base mounting. Additional brackets and mounting posts are sold separately.

An improved line of single and double section midgets. End plates 5/32" thick Isolantite. Long bushing permits single hole mounting in 3/8" diameter hole on panels up to 1/4". (Stub shaft with screw driver slot available special order only.) Singles have new thick nut for rotor shaft lock for fixed tune. Require 1 5/16" x 1 13/32" panel mounting space — duals, 1 45/64" x 1 13/32". All duals have double bearings, shaft extended at rear for ganging and have removable inter-section shields. All Trim-Airs have 1/4" brass shafts, nickel plated. Aluminum plates with nickeled brass spacers. Trim-Air accessories fit duals, singles, band-spread types, as well as "E" type fixed air midgets. Airgaps .020", .030", and .070" in dual and singles, with capacities to 140 MMFD. Fixed midgets capacity range to 200 MMFD. in .020", .030", and .050" airgaps. One type EE-60-FS has 60 MMFDS., airgap .100".

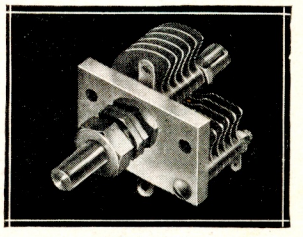

ZR-35-AS

MIDWAY TRANSMITTING CONDENSERS

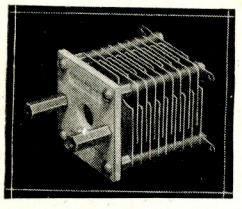

EO-100-FS

TYPE "E" MIDGET FIXED AIR CONDENSERS

For low and medium power transmitters and receivers, where light weight and small space are factors. Ideal for portable and aircraft equipment. Panel mounting space only 2 1/8" x 3" condenser open. 1/4" steel shaft; aluminum frame; brass bearings; plates buffed, rounded on all airgaps .070" or over. Aluminum mounting feet extra. Mycalex insulation. For "upside-down" mounting, use new type "M" mounting brackets; perfect layout for high efficiency, short lead P.P. amplifier permits low stator to chassis capacity. Capacity ranges, single section types, 365 MMFD. for .030" airgap, 150 for .070" airgap. Duals range 260 MMFD. per section for .030" gap, 180 for .050" gap, and 100 MMFD. for .070" airgap.

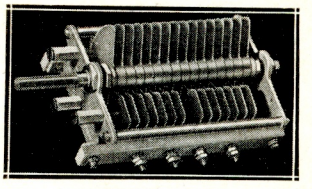

MT-150-GS

"T" TYPE HEAVY DUTY TRANSMITTING CONDENSERS

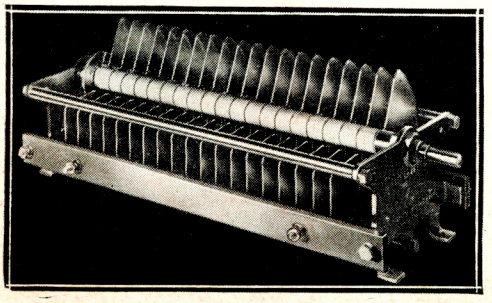

Special TK-300-US

No finer stock condenser made. In commercial service the world over. 6 1/4" wide, 5 3/8" high, plates unmeshed. Corona shields on stators for wider airgap types. End plates 1/8" thick, heavy nickel plated. Massive bearings, 3/8" stainless steel shafts; heavy, two finger phosphor bronze rotor contactor bears on sturdy contact ring built to carry very heavy current without loss. Rotor plates 4 1/2" diameter, .050" thick aluminum. Heavy mounting feet formed as part of end plates. Ball thrust rear bearing. Mycalex insulation. Truly the finest stock condenser money can buy. Capacity ranges: to 315 MMFD. for .168" airgap, 300 for .230", 160 for .294" and 80 MMFD. for .500" airgap. Equivalent duals for nearly all single section types.

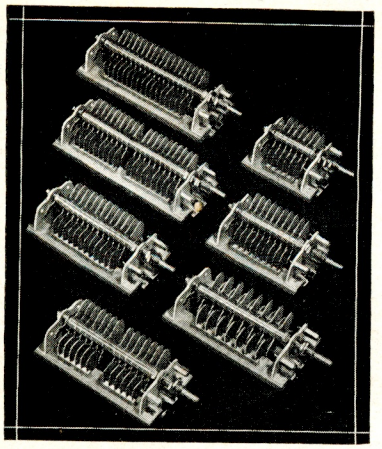

New ULTRA-HIGH FREQUENCY Transmitting Condenser Series

Specifications of "N" TYPE U.H.F. SERIES

FRAME—*No frame or tie rods. Aluminum end plates supported directly on heavy lateral ceramic bars which carry stators.*

SHAFT—*¼" cadmium plated steel on which rotor assembly is securely locked.*

PLATES—*Aluminum alloy .040" thick with edges rounded.*

BEARINGS—*Long, nickel-plated brass, shoulder type front bearing, with ball thrust rear bearing. Laminated phosphor bronze rotor contactor.*

AIRGAP—*.070"—3000V. peak—(NT)*
.084"—4200V. peak—(NP)
.171"—6000V. peak—(NG)

MOUNTING—*Single hole, front panel, with mounting posts or chassis mounting on feet which form part of end plate. Or use type "M" bracket and mount upside down for lowest capacity to ground.*

CAPACITY RANGES—*To 150 MMFD. in singles, 75 in duals for .084" airgap, single NG-35-DS has 171" airgap.*

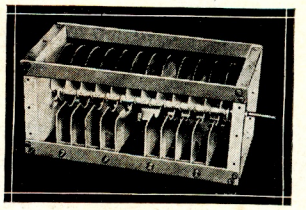

TYPE "P" LIGHT WEIGHT CONDENSERS

For Commercial Transmitters and Induction Heating Units

END PLATES — Stamped and folded ⅛" aluminum 7½" square, satin finish. INSULATION — Mycalex. No metal tie rods. ROTOR PLATES — .0625" thick, 6¾" diameter, buffed and polished aluminum. All "P" types are special order.

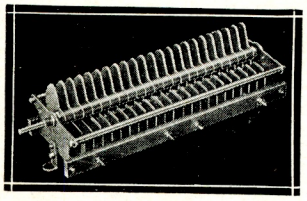

XG-110-XD

"X" TYPE TRANSMITTING CONDENSERS

Standard of Comparison for Years

Rounded edges, polished aluminum plates, .040" thick on all but "XT" and "XR" types.

Frames, tie rods, bearing bushings, spacers and stator blocks, nickel plated brass. Cadmium plated ¼" steel shaft supports securely locked rotor assembly. Mycalex insulation. Panel space 4⅜" x 3⅜". Panel or chassis mounting. N.P. brass mounting feet extra. Capacity ranges to 1500 MMFD. for .030" gap, 440 MMFD. for .070", 330 MMFD. for .084", 240 for .110", 100 for .200" airgap. Equivalent dual section types for nearly all single section types.

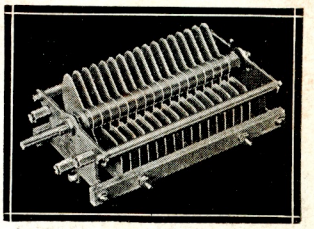

XE-240-XS

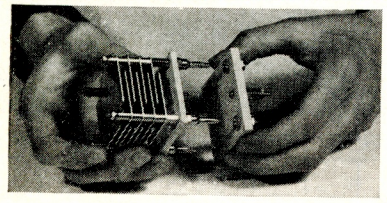

TYPE "J" PLUG-IN FIXED AIR CONDENSERS

For Fixed Capacity Loading

Connect Jack Base across high frequency class "C" tank and plug in proper "J" capacitor to load circuit to lower frequency; proper "C" means highest operating efficiency. Plates easily removed. All "J" types have 2¼" square x ¼" Alsimag No. 196 ceramic end plates. Supplied with banana plugs to fit "JB" Jack Base, sold separately. On special order provided with hexagonal brass mounting pillars and mounting screws for permanent installation.

Capacity range: to 100 MMFD. for .125" airgap, 50 for .250" gap and 50 MMFD. for .350" airgap.

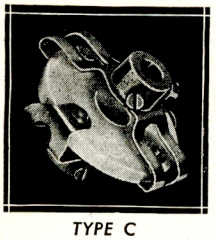

TYPE C

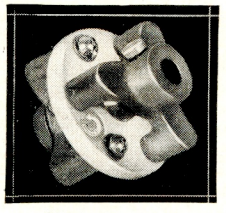

NEW TYPE ENF

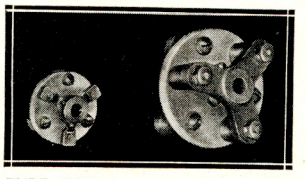

TYPE FNF TYPE CNF

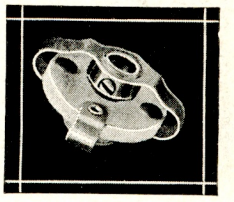

TYPE A

INSULATED COUPLINGS

MOST COMPLETE LINE OF FINEST FLEXIBLE AND RIGID COUPLINGS

Alsimag No. 196 insulation throughout. All flexible couplings have N.P. phosphor bronze springs, nickel plated brass hubs, permanently swaged into the springs. Two case hardened steel set screws on each hub insure positive lock to shaft. Type "B" is like type "A" except hubs turned OUT for increased flash-over rating. Type "E" like type "C" except smaller. Type "D" like "C" except hubs turned IN. Type "F" like "E" except hubs turned IN. New "ENF" like "FNF" except long spider legs.

All rigid types are redesigned and have three point suspension, solid brass castings, absolutely rigid.

Buy More War Bonds and Stamps

CARDWELL CONDENSERS

THE ALLEN D. CARDWELL MANUFACTURING CORPORATION

81 PROSPECT STREET • BROOKLYN 1, N. Y.

GAMMATRON TUBES

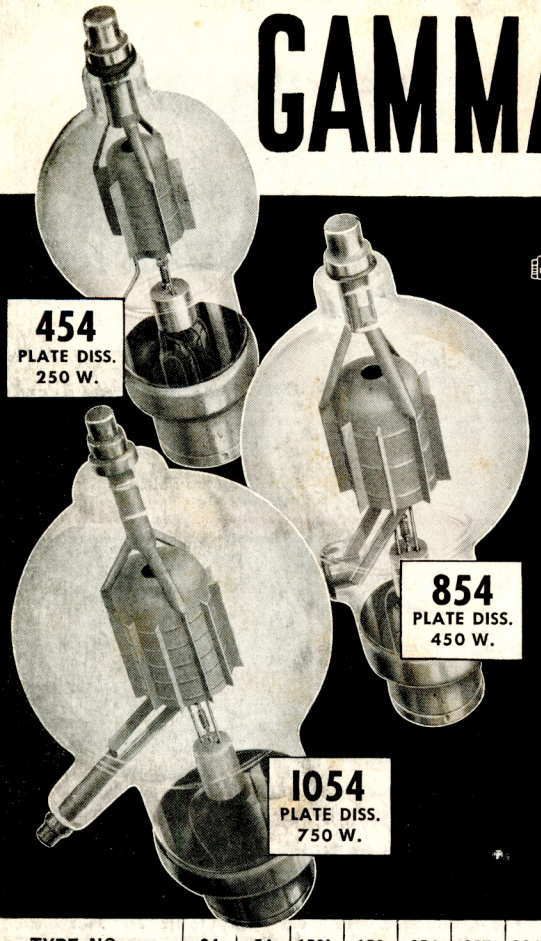



Developed in the Gammatron plant the new types 454, 854 and 1054 have copper to glass seals and special plate, grid and filament design to give a new high in UHF performance. Other features: ability to stand high plate voltages, complete protection against failure through overloads and extra long life.

Fourteen years of pioneering and experience in tantalum tubes are built into this complete line covering a power range of 50 to 5000 watts. Also available are variations of these types and high vacuum tantalum rectifiers.

The Gammatron engineers responsible for these developments will be glad to help with your special problems.

HEINTZ AND KAUFMAN
SOUTH SAN FRANCISCO LTD. CALIFORNIA U·S·A·

TYPE NO.	24	54	152L	158	254	257*	304L	354C	354E	454L	454H	654	854L	854H	1054L	1554	2054A	3054
MAX. POWER OUTPUT: Class 'C' R.F.	90	250	610	200	500	230	1220	615	615	900	900	1400	1800	1820	3000	3600	2000	5300
PLATE DISSIPATION: Watts	25	50	150	50	100	75	300	150	150	250	250	300	450	450	750	1000	1200	1500
AVERAGE AMPLIFICATION FACTOR	25	27	10	25	25		10	14	35	14	30	22	14	30	13.5	14.5	10	20
MAX. RATINGS: Plate Volts	2000	3000	3000	2000	4000	4000	3000	4000	4000	5000	5000	4000	6000	6000	6000	5000	3000	5000
Plate M.A.	75	150	500	200	225	150	1000	300	300	375	375	600	600	600	1000	1000	800	2000
Grid M.A.	25	30	75	40	40	25	150	60	70	60	85	100	80	110	125	250	200	500
MAX. FREQUENCY, Mc.: Power Amplifier	200	200	175	100	175	150	175	50	50	150	150	50	125	125	100	30	20	30
INTERELECTRODE CAP: C g—p u.u.f.	1.7	1.8	5	4.6	3.6	0.04	9	3.8	3.8	3.4	3.4	5.5	5	4	5	11	18	15
C g—f u.u.f.	2.5	2.1	7	4.7	3.3	13.8 In.	12	4.5	4.5	4.6	4.6	6.2	6	8	8	15.5	15	25
C p—f u.u.f.	0.4	0.5	0.4	1.0	1.0	6.7 Out.	0.8	1.1	1.1	1.4	1.4	1.5	0.5	0.5	0.8	1.2	7	2.5
FILAMENT: Volts	6.3	5.0	5-10	12.6	5.0	5.0	5-10	5	5	5	5	7.5	7.5	7.5	7.5	11	10	14
Amperes	3	5	13-6.5	2.5	7.5	7.5	13-26	10	10	11	11	15	12	12	21	17.5	22	45
PHYSICAL: Length, Inches	4¼	5 7/16	7¾	4¾	7	6¾	7¾	9	9	10	10	10⅜	12½	12½	16½	18	21¼	30¾
Diameter, Inches	1⅜	2	2½	2	2⅝	2⅝	3½	3⅜	3⅜	3¾	3¾	3¾	5	5	7	6	6	9
Weight, Oz.	1½	2½	8	4	6½	6	9	6½	6½	7	7	14	14	14	42	56	66	200
Base	Small UX	Std. UX	John-son #213	Std. UX	Std. 50 Watt	Giant 7 Pin	John-son #213	Std. 50 Watt	Std. 50 Watt	Std. 50 Watt	Std. 50 Watt	Std. 50 Watt	Std. 50 Watt	Std. 50 Watt	John-son #214	HK 255	W.E. Co.	HK 255
*Beam Pentode.																		
NET PRICE	4.75	8.00	30.00	18.50	13.50	27.50	65.00	24.50	24.50	27.50	27.50	75.00	75.00	75.00	175.00	225.00	300.00	395.00

WRITE FOR FULL DATA ON ALL GAMMATRONS



YOU'VE got enough on your mind without worrying about the quality of your electrical glassware. Let Corning do that for you on everything you need. For example, Corning now makes the following items:

- Entering, Strain and Stand-Off Insulators in the antenna or power supply system. (A few are illustrated in Fig. 1)
- Coil Forms (Figs. 2 and 4)
- Bushings for Transformers (Illustrated in Fig. 5)
- Jackets for Wire Wound Resistors (Not illustrated)
- Miscellaneous Bushings, Spacers, Insulating Bases used throughout the entire installation (Fig. 3)
- Corning can also furnish Fuse Tubing, Fuse Plug Bodies, Ozone Cylinders, Cyclotron Insulators, Precision Bore Tubing, and almost every type of electrical insulating specialty.

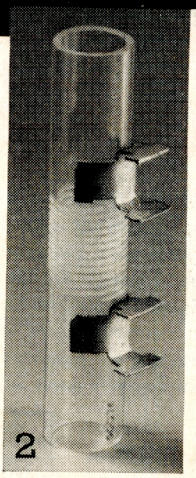
2

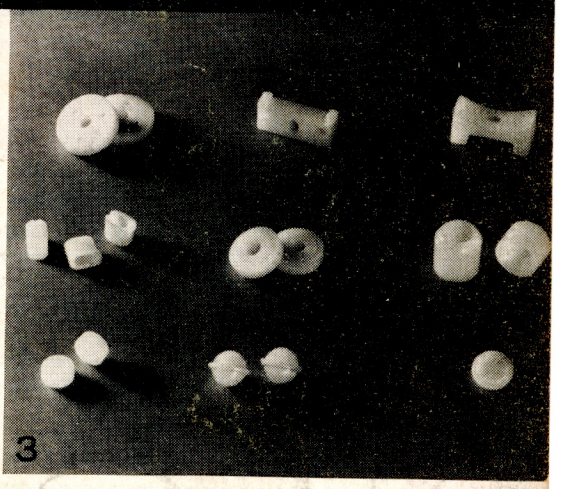
3

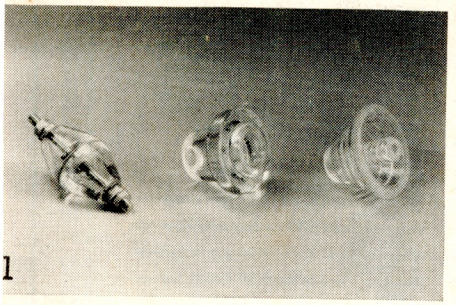
1


4

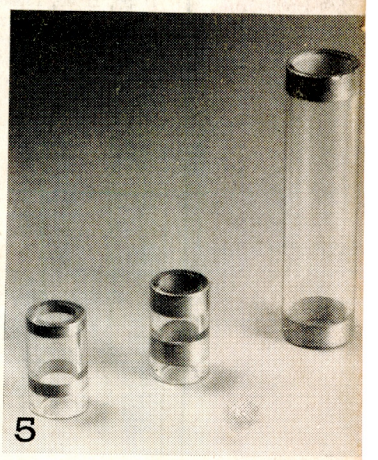
5

MAIL COUPON FOR COMPLETE DETAILS

PYREX" is a registered trade-mark and indicates manufacture by Corning Glass Works.

Pyrex Insulators
BRAND

Corning Glass Works
Insulation Division, Dept. RA-1
Corning, N. Y.

Please send me details on the complete line of Corning insulation for communications:

Name.....

Company.....

Street.....

City.....*State*.....

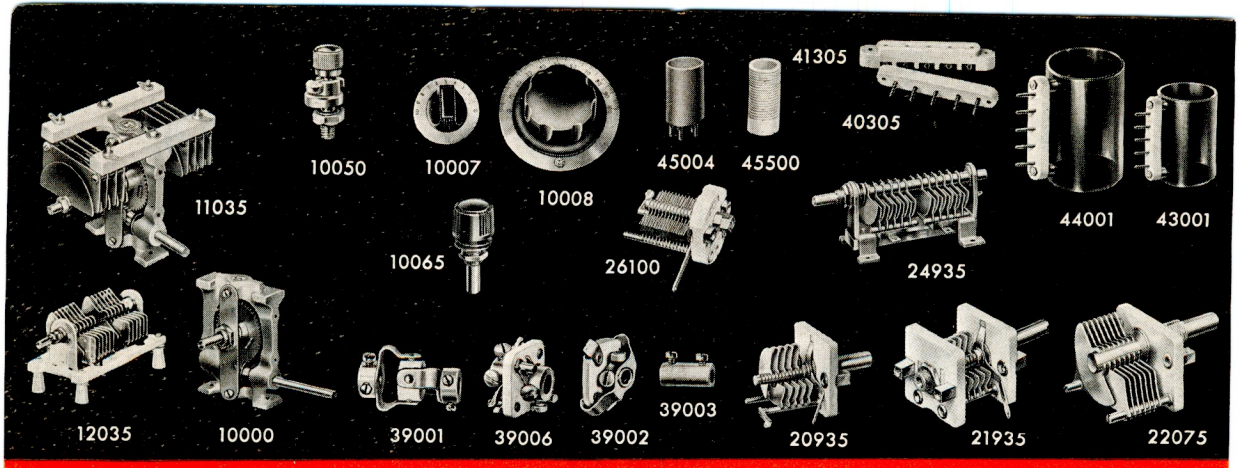

MILLEN MODERN PARTS



MILLEN RADIO PRODUCTS are well designed MODERN PARTS for MODERN CIRCUITS, attractively packaged, moderately priced, and fully guaranteed. They have been designed with a view toward easy and practical application as well as efficient performance. For instance, the terminals are located so as to provide shortest possible leads, mounting feet are designed for easy insertion of screws and socket contacts, so that the solder won't run down inside them and make impossible the insertion of the tube, etc. Thus our slogan, "Designed for Application." Our general catalog is available for the asking either from your favorite parts supply house or direct from the factory.

11000, 12000, 13000, 14000 SERIES CONDENSERS
.077" air gap is for 3000 volt peak rating

MILLEN TYPE

Code	Capacity per side		Air Gap	Voltage Rating	Net Price
	Max.	Min.			
11035	36	4.6	.077"	3000	$6.90
11050	51	6.5	.077	3000	7.14
11070	74	9.5	.077	3000	7.80
13035	35	4.9	.077	3000	4.56
13050	49.5	6.3	.077	3000	5.20
13070	71	7.3	.077	3000	5.88
14200	204	10.7	.077	3000	7.80
14100	90.5	12.9	.171	6000	12.00
14050	50		.171	6000	7.20
14060	60		.265	9000	12.00

CONVENTIONAL SINGLE SECTION TYPE

Code	Capacity per section		Air Gap	Finish on Plates	Net Price
	Min.	Max.			
12935	9	37	.176"	Polished	$4.32
12936	9	37	.176	Plain	3.90
12536	6	43	.077	Plain	2.40
12551	7	55	.077	Plain	2.70
12576	9	76	.077	Plain	3.00
12510	12	101	.077	Plain	3.60
12515	18	151	.077	Plain	4.50

CONVENTIONAL DOUBLE SECTION TYPE

Code	Capacity per section		Air Gap	Finish on Plates	Net Price
	Min.	Max.			
12035	6	43	.077"	Polished	$4.32
12036	6	43	.077	Plain	3.90
12050	7	55	.077	Polished	5.10
12051	7	55	.077	Plain	4.32
12075	9	76	.077	Polished	5.61
12076	9	76	.077	Plain	5.40

Code	Description	Net Price
10000	Worm Drive Unit	$4.50
10001	Drum Meter Dial-0-100	1.85
10007	1⅝" Nickel Silver Inst. Dial-0-100	.50
10008	3½" Nickel Silver Inst. Dial-0-100	1.00
10050	Dial Lock	.45
10060	Shaft Lock for ¼" Shafts	.36
10065	Vernier Drive Unit	.36
10067	Shaft Bearing, ¼"	.21
15001	Neutral Condenser 0.7–4.3	.90
15002	Neutral Condenser 0.5–13.5	1.05
15003	Neutral Condenser 1.5–8.5	.90
15005	Neutral Condenser 3.4–14.6	2.00
15006	Neutral Condenser 2.8–9.1	3.00
20015	Steatite Ultra Midget 15 mmfd SS	.75
20035	Steatite Ultra Midget 35 mmfd SS	1.00
20050	Steatite Ultra Midget 50 mmfd SS	1.20
20100	Steatite Ultra Midget 100 mmfd SS	1.50
20140	Steatite Ultra Midget 140 mmfd SS	1.70
20920	Steatite Ultra Midget 20 mmfd DS	1.20
20935	Steatite Ultra Midget 35 mmfd DS	1.40
21050	Steatite Ultra Midget 50 mmfd SS	1.75
21100	Steatite Ultra Midget 100 mmfd SS	1.90
21140	Steatite Ultra Midget 140 mmfd SS	2.10
21935	Steatite Ultra Midget 35 mmfd DS	1.90
22075	Steatite Midget 75 mmfd SS	1.32
22100	Steatite Midget 100 mmfd SS	1.38
22140	Steatite Midget 140 mmfd SS	1.62
22915	Steatite Midget 15 mmfd DS	1.20
22935	Steatite Midget 35 mmfd DS	1.30
22950	Steatite Midget 50 mmfd DS	1.50
23075	Steatite Dual Midget 75 mmfd per section SS	2.60
23100	Steatite Dual Midget 100 mmfd per section SS	2.50
23925	Steatite Dual Midget 25 mmfd per section DS	2.25
23950	Steatite Dual Midget 50 mmfd per section DS	2.50
24100	100 mmfd per section, Single spaced	2.75
24935	35 mmfd per section, Double spaced	2.75
25130	93–130 Air Padder	1.50
26025	3.2–25 Air Padder	.96
26050	4–50 Air Padder	1.08
26075	4.3–76 Air Padder	1.20
26100	5–97 Air Padder	1.32
26140	6.5–140 Air Padder	1.60
26920	4.5–20 Air Padder	1.40
26935	5.5–36 Air Padder	1.50
27010	10 mmf Silver on Mica	.36
27025	25 mmf Silver on Mica	.36
27050	50 mmf Silver on Mica	.36
27100	100 mmf Silver on Mica	.36

JAMES MILLEN MFG. CO., INC.
MAIN OFFICE AND FACTORY
MALDEN, MASSACHUSETTS, U.S.A.

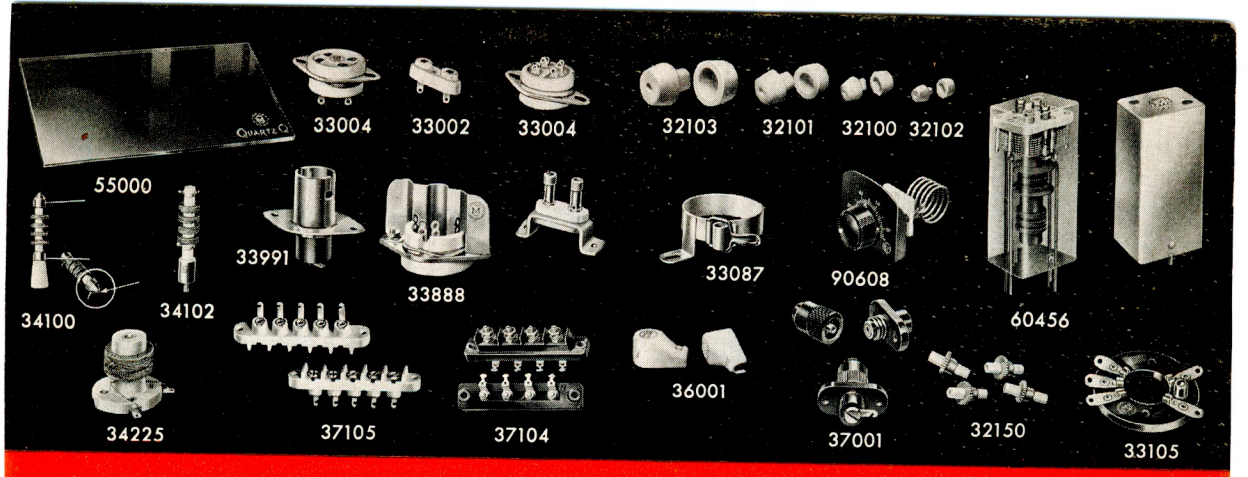

DESIGNED for APPLICATION

Code	Description	Net Price
27150	150 mmf Silver on Mica	$ .42
28030	30 mmfd Mica Padder	.15
30001	Standoff, ½ x 1¾, QuartzQ	.15
30002	Standoff, ½ x 2⅞, QuartzQ	.21
30003	Standoff, ¾ x 2⅞, QuartzQ	.55
30004	Standoff, ¾ x 4⅞, QuartzQ	.65
31001	Standoff, ½ x 1, Isolantite	.20
31002	Standoff, ½ x 2½, Isolantite	.27
31003	Standoff, ¾ x 2, Isolantite	.30
31004	Standoff, ¾ x 3½, Isolantite	.42
31011	Cone, ¾ x ½, Steatite	.10
31012	Cone, 1 x 1, Steatite	.21
31013	Cone, 1½ x 1, Steatite	.27
31014	Cone, 2 x 1, Steatite	.75
31015	Cone, 3 x 1½, Steatite	.45
32100	Steatite Bushing for ⅜" hole	.30
32101	Steatite Bushing for ½" hole	.35
32102	Steatite Bushing for ¼" hole	.20
32103	Steatite Bushing for ¾" hole	.45
32150	Isolantite Thru-bushing, for ¼" hole	.05
32201	Steatite Bushing and Hardware	.75
32203	Steatite Bushing and Hardware	3.60
32300	Isolantite Bushing	1.80
33002	Crystal Socket	.25
33004	4 Prong Socket	.24
33005	5 Prong Socket	.24
33006	6 Prong Socket	.24
33007	7 Prong, Large, Socket	.24
33008	8 Prong, Octal, Socket	.24
33087	Base Clamp for 807 etc.	.30
33105	Acorn Socket, QuartzQ	.90
33888	Aluminum Shield for 33008	.18
33991	Socket for 991 etc.	.45
34010	Shielded 10 MH receiving	.75
34100	Universal 2.5 MH	.36
34101	Universal 2.5 MH, less Standoff	.30
34102	Commercial type 2.5 MH	.36
34140	Universal air core Transmitting	1.00
34150	Amateur Band Iron Core	1.75
34210	General Purpose RFC 10 MH	.60
34225	General Purpose RFC 25 MH	1.75
34240	General Purpose RFC 40 MH	.75
34285	General Purpose RFC 85 MH	1.25
34800	Interruption Frequency Oscillator Coil	1.20
36001	Ceramic Plate Cap, 9/16" for 866 etc.	.21
36002	Ceramic Plate Cap, ⅜" for 807 etc.	.21
37001	Black Bakelite Safety Terminal	.40
37104	Four Terminal, Black Bakelite	.60
37105	Five Terminal, Steatite	.75
37202	Steatite Plates, Pr.	.30
37211	Bracket	.15
37222	Terminal Posts, Pr.	.30
37501	Low Loss Mica Bakelite Safety Terminal	.55
38001	Isolantite 3/16" O.D. Beads (Pk of 50)	.30
38500	100 Beads, 5/16" dia., QuartzQ	.60
39001	Truly Flexible Isolantite	.36
39002	Conventional	.36
39003	Solid Brass N.P.	.21
39005	Universal Joint, Non-Insulated	.36
39006	Slide Action	.36
40205	Midget Plug	.24
40305	Intermediate size plug	.45
41205	Midget Socket	.30
41305	Intermediate size socket	.45
43001	QuartzQ blank form and plug	.90
43011		.90
43021	Midget coils for each	.90
43041	band. Mounted on No. 40205	.90

Code	Description	Net Price
43081	plug. No. 1 at end of code means	$ .90
43161	center link. No. 2, end link.	.90
44000	QuartzQ form 1¾" dia. x 3¾"	.75
44001	QuartzQ blank form and plug	1.20
44005		1.50
44010		1.50
44020		1.50
44040	"100 watt" coils	1.50
44080	for each band. Mounted on	1.90
44160	No. 40305 plug	2.10
44500	Swinging link and socket	1.75
45000	Coil Form, 1" dia. no p., low loss mica base Phenolic	.21
45004	Coil Form, 1" dia. 4 p., low loss mica base Phenolic	.30
45005	Coil Form, 1" dia. 5 p., low loss mica base Phenolic	.30
45500	Coil Form, ⅝" dia., Steatite	.45
46100	Coil Form, 1½" dia. no p., QuartzQ	.45
47001	Coil Form, ½" dia., QuartzQ	.10
47002	Coil Form, ½" dia., QuartzQ	.15
47003	Coil Form, ¾" dia., QuartzQ	.35
47004	Coil Form, ¾" dia., QuartzQ	.45
55001	Sheet, 3 x 8½ x .1, QuartzQ	.45
58000	Coil Dope. 2 oz., QuartzQ	.30
77083	"83" Hash Filter 250MA	1.00
77866	"866" Hash Filter 500MA	1.25 pr.
77872	"872" Hash Filter	1.40 pr.
79020	14mc Band Wave Trap	.90
79040	7mc Band Wave Trap	.90
79080	3.5mc Band Wave Trap	.90
79160	1.7mc Band Wave Trap	.90

Air Trimmed

60454	456 Diode	Air Core	4.50
60455	456 Interstage (1)	Air Core	4.50
60456	456 Interstage (2)	Air Core	4.50
60501	5000 Interstage (2)	Air Core	4.50
60502	5000 Diode	Air Core	4.50
60503	5000 FM Interstage	Air Core	4.50
60504	5000 FM Disc	Air Core	4.50
62161	1600 Interstage	Iron Core	4.50
62162	1600 Diode	Iron Core	4.50
62454	456 Diode	Iron Core	4.50
62456	456 Interstage	Iron Core	4.50
63163	1600 BFO	Air Core	4.50
63456	456 BFO	Air Core	4.50
63503	5000 BFO	Air Core	4.50

Mica Trimmed

67454	456 Diode	Iron Core	1.25
67456	456 Interstage	Iron Core	1.25
67503	5000 FM Interstage	Air Core	1.50
67504	5000 FM Disc	Air Core	1.50

Permeability Tuned

64454	456 Diode (2)	1.50
64456	456 Interstage (2)	1.50
65456	456 BFO	1.35

Triple Tuned

66454	456 Diode	1.75
66456	456 Interstage	1.75
90600	Complete set of four Wavemeters, in case	12.00
90605	Range 2.8 to 9.7 mc. Wavemeter	3.00
90606	Range 9.0 to 28 mc. Wavemeter	3.00
90607	Range 26 to 65 mc. Wavemeter	3.00
90608	Range 50 to 140 Wavemeter	3.00
90721	Hetrofil	4.00

JAMES MILLEN MFG. CO., INC.
MAIN OFFICE AND FACTORY
MALDEN, MASSACHUSETTS, U.S.A.



···BLILEY

STANDARD OF

FOR ALL QUARTZ CRYSTAL

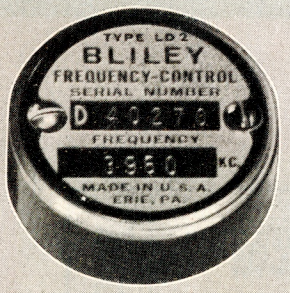

TODAY, the entire output of Bliley Crystal Units is directed to vital communications equipment for war purposes. When the United Nations win the last battle, as they most certainly will, the fruits of increased engineering knowledge, expanded facilities and improved production technique, will be available to a peace time world . . . a new world of greater human comfort through applied engineering and science.

In this new world, Bliley Crystals will take their rightful place with their pre-war record of dependability, accu-

SPECIFY BLILEY FOR ACCURACY ◆

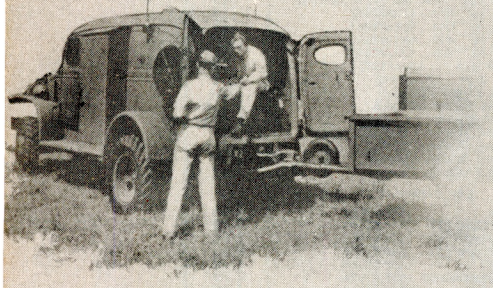



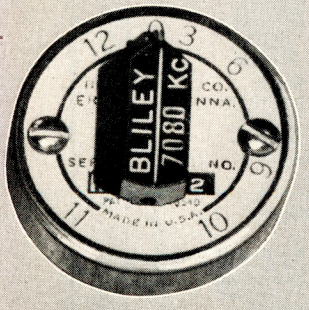

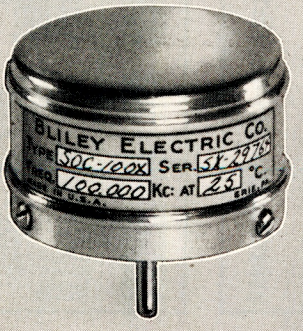

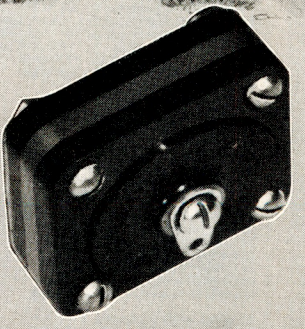

CRYSTALS

EXCELLENCE

PIEZOELECTRIC APPLICATIONS

racy and user acceptance. Not counting applications covered by war time secrecy necessities, there will be Bliley Precision-made Crystals for diathermy, ultrasonic generators, pressure gauges, carrier-current communications systems, radio frequency filters, and precision interval timers. And, of course, in greater quantities than ever before, frequency controlling crystal units for all radio communication necessities, F. M. or A. M., fixed, portable, mobile or air borne. As always, Bliley Engineers are ready to extend their assistance to you . . . call on them freely.

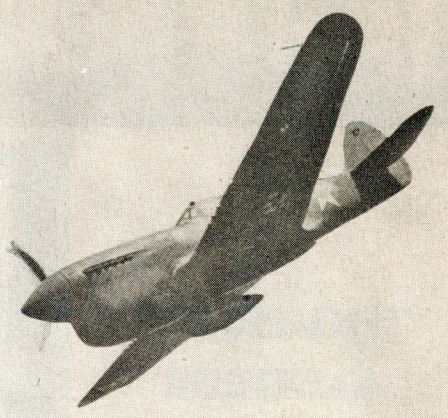

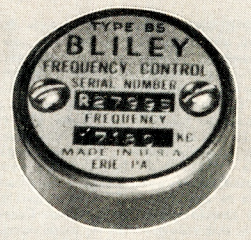

DEPENDABILITY ◆ PERFORMANCE

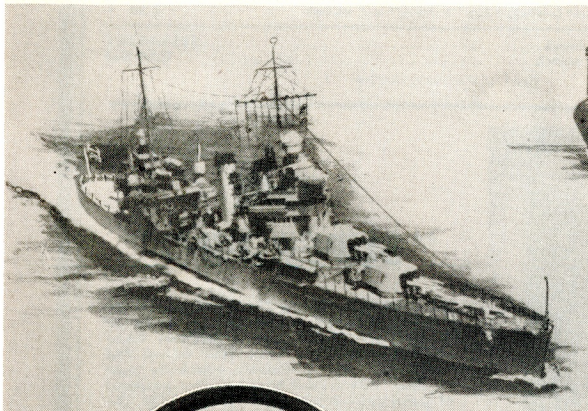

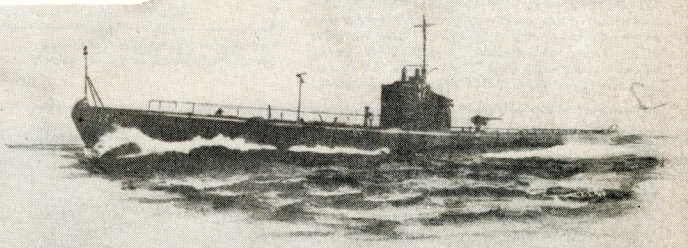







ALL PICTURES, EXCEPT THOSE OF BLILEY PRODUCTS ARE OFFICIAL U. S. ARMY OR U. S. NAVY PHOTOGRAPHS

ERIE, PENNSYLVANIA

HAMMARLUND

PRECISION PRODUCTS FOR BETTER RADIO

"HQ-120-X" AMATEUR RECEIVER

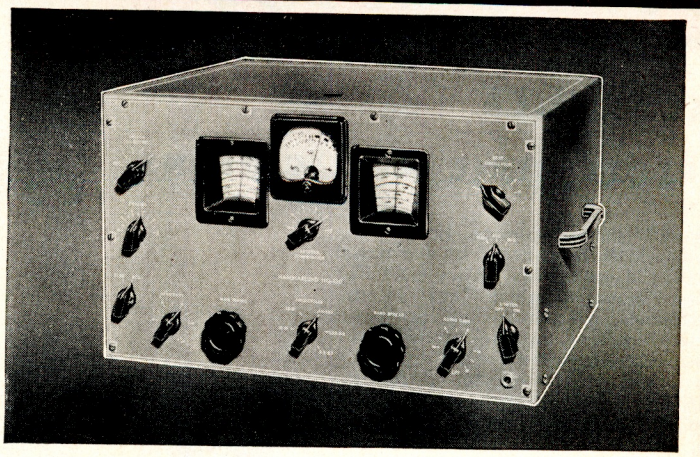

THE HAMMARLUND "HQ-120-X" meets the most critical demands of amateur and professional operators. Hammarlund engineers have gone beyond ordinary practice in designing this new and outstanding receiver. This ultra-modern 12-tube superheterodyne covers a continuous range of from 31 to .54 mc. (9.7 to 555 meters) in six bands, taking in all important amateur, communication, and broadcast channels. The "HQ-120-X" is not to be confused with modified broadcast sets. Two years were required to develop it. This is a special receiver with special parts throughout. Every wave range is individual—that is, each range has its own individual coil and a tuning condenser of proper value for maximum efficiency; thus, including the broadcast band does not decrease efficiency at high frequencies. Besides having all the necessary features for perfect short wave reception, such as A.V.C., beat oscillator, send-receive switch, phone jack and relay terminals, the "HQ-120-X" also includes a new and outstanding crystal filter circuit which is variable in 6 steps from full bandwidth to razor edge selectivity. This permits the use of the crystal filter for the reception of both voice and music. It is no longer necessary to contend with serious heterodyne interference. These annoying disturbances can be phased out with the phasing control on the panel. Other features include drift compensation for improved stability; a new and accurate "S" meter circuit for measuring incoming signal strength; antenna compensator to compensate for various antennas, and 310 degrees band spread for each amateur band from 80 to 10 meters. The band spread dial is calibrated in megacycles for each of these amateur bands. The main tuning dial is calibrated in megacycles throughout the entire range of the receiver. Gray finish. Rack adapter $6.00 extra.

Prices include Speaker and Tubes

Code	Type	Tuning Range	Speaker	Net Price
HQ-120-X	Crystal	31—.54 mc.	10" P.M. Dyn.	$168.00
Speaker cabinet (metal) 12½" x 12½" x 7 inches				3.90

Special model finished in black..... $168.00 Net
Speaker Cabinet, black to match..... 3.90 Net

Send for Descriptive Booklet!

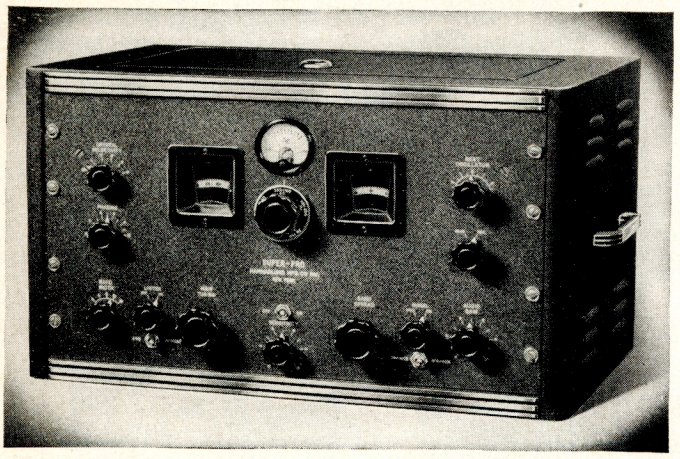

THE "SUPER-PRO"

Code	Type	Spkr.	Tuning Range	Net Price
SP-210-X	Crystal	10"	15—560 meters	$318.00
SP-210-SX	Crystal	10"	7½—240 meters	318.00
SP-220-X	Crystal	12"	15—560 meters	330.00
SP-220-SX	Crystal	12"	7½—240 meters	330.00
PSC	10" speaker cabinet to match receiver			5.10

Special Models Covering Other Wave Ranges Available On Order

THIS 18-tube "SUPER-PRO" includes all the outstanding features which have made the "Super-Pro" famous, and in addition many recent developments have been added. The "Super-Pro" has a variable selectivity crystal filter. This crystal filter has five positions of selectivity—3 for phone and 2 for CW. The variable crystal filter, in addition to the variable band width I.F., provides a selectivity range of from less than 100 cycles to approximately 16 kc. The new "Super-Pro" also has an improved noise limiter designed to minimize interference caused by automobile ignition systems and disturbances of similar nature. Maximum image suppression is obtained with two stages of high selectivity tuned R.F. ahead of the first detector. Three stages of I.F. are employed and there are three stages of high fidelity audio amplification resulting in an output of approximately 14 watts. A new and improved "S" meter has been installed in the "Super-Pro" for accurately reporting relative signal strength. Other features include full band-spread on all bands; beat oscillator; send-receive switch; relay connections; phone connections; connections for phono-pickup; beautifully finished modernistic cabinet. The sensitivity of the "Super-Pro" is better than 1 microvolt. Available in rack mounting type at $10.50 extra.

Write for Circular!

HAMMARLUND MANUFACTURING CO., INC. • 460 West 34th Street • New York City

HAMMARLUND

PRECISION PRODUCTS FOR BETTER RADIO

"TC" TRANSMITTING CONDENSER

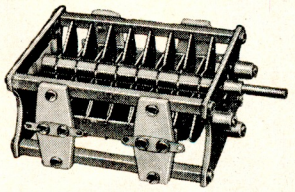

A moderately priced, heavy duty transmitting condenser, featuring heavy aluminum and plate, Isolantite insulation, non-inductive, self-cleaning silver plated beryllium contacts, full floating rotor bearing, non-magnetic rotor assembly, polished heavy aluminum plates accurately spaced. All, except type "L," have round edge plates of .040" thickness. Type "L" has .025" plates with plain edges. Type "F" has .230", 7500 V. air gap. Type "G," .200", 6750 V. Type "H," .171", 6000 V. Type "J," .100", 4250 V. Type "K," .084", 3750 V. Type "L," .070", 2000 V. air gap.

Available in a wide variety of capacities and working voltages, these condensers are ideal for modern up-to-date transmitters with power outputs ranging from 200 watts to 1 kw.

Type	Capacity	Overall Length	List
TC-220-L	220 mmf.	4 1/16	$ 6.30
TC-440-L	465 mmf.	5 7/8	9.10
TC-90-K	95 mmf.	2 15/16	5.70
TC-165-K	167 mmf.	4 1/16	6.50
TC-220-K	222 mmf.	4 5/8	8.00
TC-330-K	335 mmf.	6 1/2	10.00
TC-240-J	250 mmf.	6 1/2	10.20
TC-25-H	23.5 mmf.	2 15/16	5.10
TC-50-H	53 mmf.	4 1/16	6.00
TC-110-H	115 mmf.	6 1/2	9.00
TC-40-G	46 mmf.	4 1/16	7.00
TC-65-G	75 mmf.	5 7/8	8.80
TC-100-G	110 mmf.	7 1/2	11.20
TC-150-G	165 mmf.	10 5/8	14.80
TC-55-F	60 mmf.	5 7/8	8.00

"TCD" SPLIT STATOR TYPES

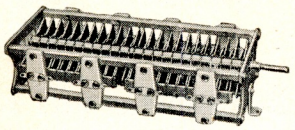

These split stator transmitting condensers are identical to the singles shown above, except that the stator sections are individual. Ideal for push-pull power amplifiers ranging in power up to 1 kw. They are of convenient size and lend themselves to construction of compact apparatus. Overall dimensions in back of panel are given in the accompanying table. The capacity values listed are for each section. The last letter in the code represents plate spacing and voltage rating. These are identical to those given above. Type "M"—plain plates, .030" air gap.

Type	Capacity	Overall Length	List
TCD-500-M	490 mmf.	4 1/16	$10.30
TCD-80-L	90 mmf.	4 1/16	8.30
TCD-210-L	215 mmf.	5 7/8	10.40
TCD-90-K	95 mmf.	4 5/8	9.40
TCD-165-K	167 mmf.	6 1/2	11.50
TCD-325-K	335 mmf.	11 1/16	20.50
TCD-240-J	250 mmf.	11 1/16	19.00
TCD-50-H	53 mmf.	6 1/2	9.80
TCD-110-H	115 mmf.	11 1/16	16.00
TCD-40-G	46 mmf.	7 1/2	10.50
TCD-75-G	85 mmf.	11 1/16	14.50
TCD-55-F	60 mmf.	11 1/16	13.70

"N" NEUTRALIZING CONDENSERS

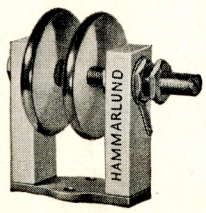

Improved neutralizing condensers with heavy polished aluminum plates. Rounded edges. Isolantite. Fine adjusting screw. Positive lock. Horizontal adjustment. Type "N-10", 2 5/8" high x 1 3/16" deep. "N-15" 4 15/16" high x 3 1/2" deep. "N-20", 5 11/16" high x 4" deep.

Code	List
N-10—(2.1—10 mmf.)	$4.60
N-15—(3.2—14 mmf.)	8.70
N-20—(3.8—14 mmf.)	9.30

"MTC" TRANSMITTING CONDENSERS

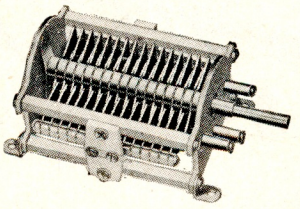

Compact types, Isolantite insulation. Base or panel mounting. Polished aluminum plates. Stainless steel shaft. Size of 150 mmf. with .070" plates spacing only 4 5/8" behind panel. All type "B" condensers have round edge plates .025" in thickness. Type "C" has plain edge plates .025" thick. Self-cleaning wiping contact.

Code	Capacity	List
MTC-20-B	22 mmf.	$4.10
MTC-35-B	33 mmf.	4.30
MTC-50-B	50 mmf.	4.60
MTC-100-B	100 mmf.	5.30
MTC-150-B	150 mmf.	6.10
MTC-50-C	46 mmf.	4.10
MTC-100-C	105 mmf.	4.40
MTC-150-C	150 mmf.	4.80
MTC-250-C	255 mmf.	5.30
MTC-350-C	360 mmf.	5.80

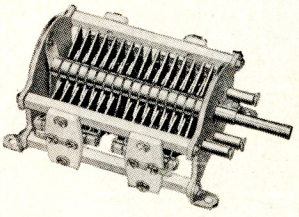

"MTCD" SPLIT-STATOR TYPES

Same outstanding features as MTC singles except that stater sections are separate. Model 100-B with .070" plate spacing, only 5 3/4" behind panel. "B" models—rounded plates "C" models—plain plate edges.

Code	Capacity	List
MTCD-20-B	22 mmf. per sect.	$5.60
MTCD-35-B	33 mmf. per sect.	6.00
MTCD-50-B	50 mmf. per sect.	6.50
MTCD-100-B	100 mmf. per sect.	8.75
MTCD-50-C	46 mmf. per sect.	5.50
MTCD-100-C	105 mmf. per sect.	6.00
MTCD-150-C	150 mmf. per sect.	6.50
MTCD-250-C	255 mmf. per sect.	7.50

A NEW LINE OF TRANSMITTING AND RECEIVING CONDENSERS

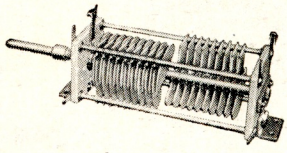

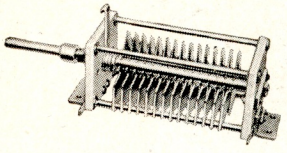

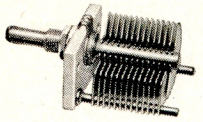

The new HFA and HFB receiving and transmitting condensers are the latest in condenser design. The HFB transmitting condenser, for example, has fully insulated rotor and control shaft permitting higher operating voltage for a given plate spacing. This new design results in more compact and efficient condenser construction and the insulated control shaft reduces the danger of electric shock to the operator. The HFB's are made in both dual and single stator types and in all important capacities.

The HFA receiving condenser is a sturdier midget condenser intended for use in portable and aviation equipment where conditions of operations demand a better and more solid condenser. These, too, are available in a wide variety of size with both single and dual stators. All types, both HFA and HFB are of 100% soldered construction with brass plates, cadmium plated. Isolantite end plates.

Send for Latest Catalog!

HAMMARLUND MANUFACTURING CO., INC. • 460 West 34th Street • New York City

Receiving Radio Tube "Know How" in one package



"TENSHUN, HAMS! JUST 70 CENTS BUYS:"



SYLVANIA TECHNICAL MANUAL ON RADIO TUBES (New Revised Edition) covers more than 400 types of tubes, giving characteristics, operating conditions, circuit applications of each. Included in 275 pages are basic definitions, typical circuits, charts, graphs and illustrations.

TUBE COMPLEMENT BOOK accurately compiles the tube requirements of all known radio receivers, including "orphans." Valuable as a history of radio development. Contains information on Interchangeable Tubes, Substitution and Panel Lamps. 270 pages.

SYLVANIA RADIO TUBE CHARACTERISTICS tabulates the circuit engineers' average characteristics for 400 different types of radio tubes. Includes tube and base diagrams.

CORRELATION OF TUBE TYPES FOR SUBSTITUTION lists more than 400 types of tubes. For each type are given style, duty and tubes available with "equivalent" and "similar" characteristics with instructions as to interchangeability — direct or with circuit modifications.

SYLVANIA BASE CHART designed for use as a wall chart or pocket booklet.

Available through your Sylvania Distributor or direct from Radio Amateur Department, Sylvania Electric Products Inc., Emporium, Pa.

SYLVANIA

ELECTRIC PRODUCTS INC.

RADIO DIVISION

ELECTRONICS . . . post-war world of opportunity

WHEN this nation went to war, it was fortunate in having thousands of amateur radio enthusiasts who had a background of years of experiment and learning in electronics . . . the science that has revolutionized the transmission of sound and sight. For this training enabled them to provide vitally needed services in electronic industries, in the Armed Forces, and in war communications. In no other country was this situation duplicated on such a broad scale.

In the post-war era, these men and those now training in the Armed Forces will be the key men in the expanded fields of electronics —broadcasting, television, emergency communication, marine and air transport, and industrial applications. They will also find opportunities in the vastly enlarged service field which all this expansion must create.

General Electric is now in the service of America-at-war, providing daily nearly $1,000,000 worth of electronic tubes, transmitting and receiving equipment for the Armed Forces. While all its manufacturing facilities are devoted to war production, G.E. is nevertheless preparing for the tremendous surge of peacetime activity . . . when products for the amateur will have a prominent place in G.E.'s manufacturing plan.

From G.E.'s unending research and electronic know-how will come many important post-war developments. From G.E.'s electronic achievements in many fields will come opportunities for those who plan to make the most of electronics in the post-war world. General Electric, Schenectady, N. Y.

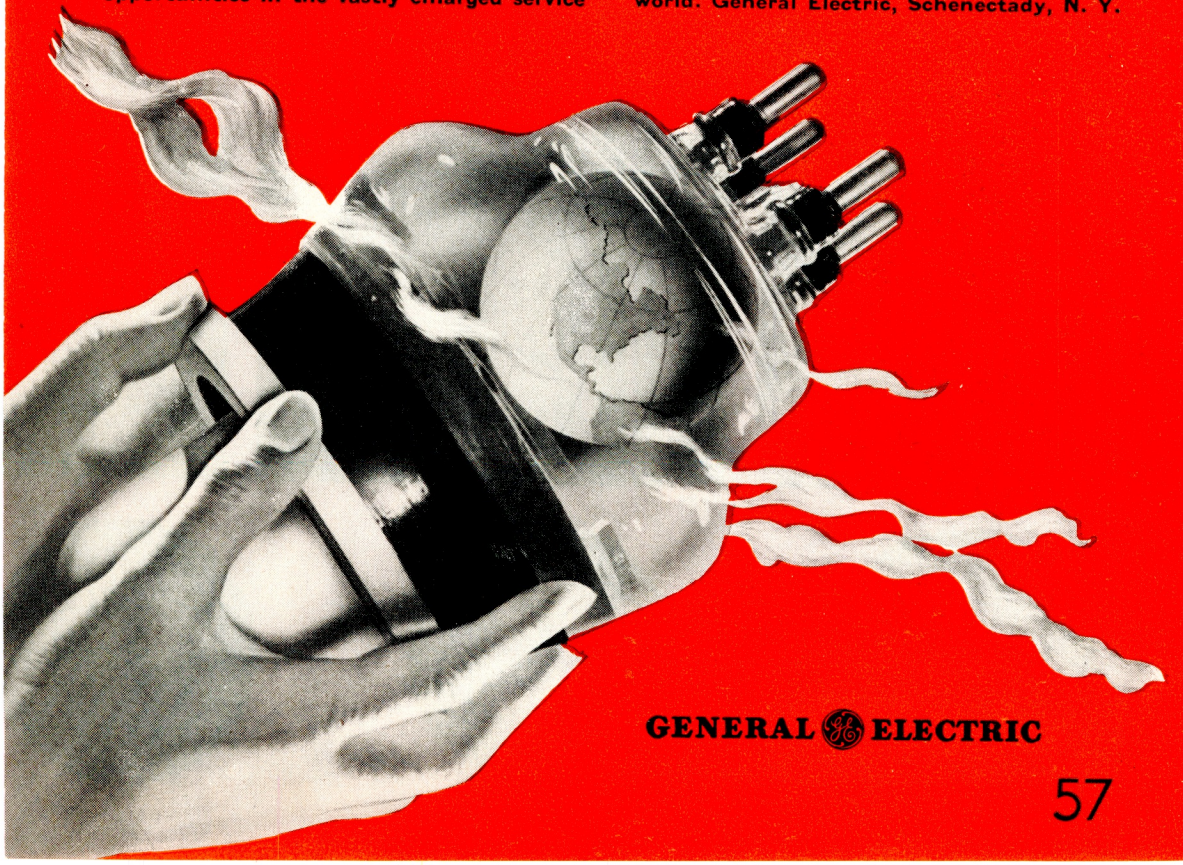

GENERAL ELECTRIC

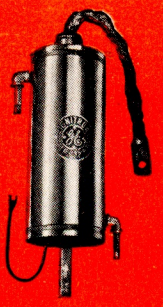
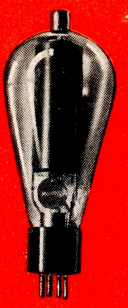
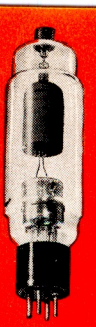

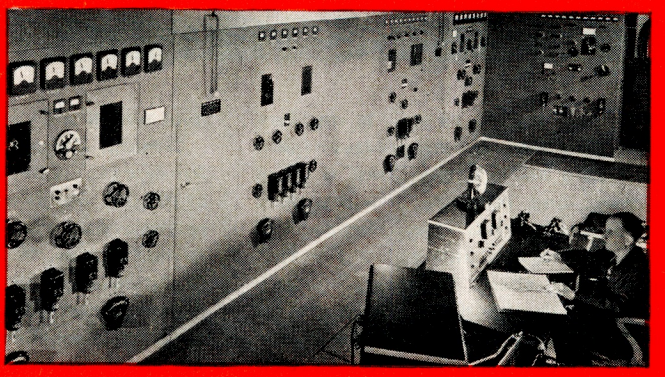
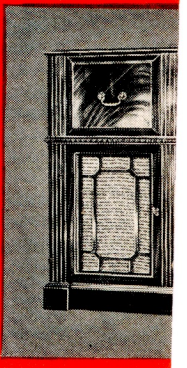

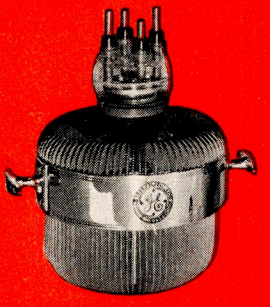


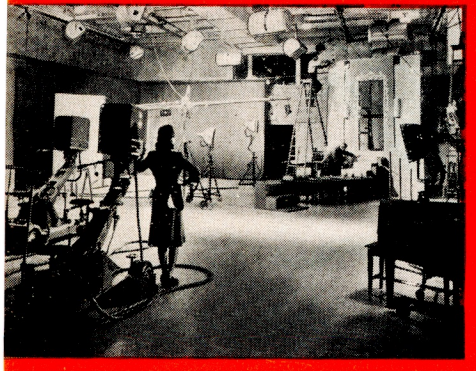
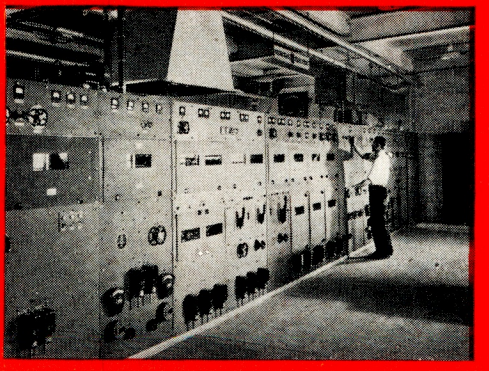
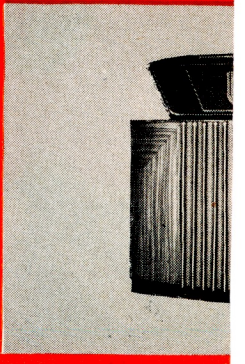




IMPORTANT GENERAL ELECTRIC ELECTRONIC PRODUCTS

INDUSTRIAL ELECTRONIC TUBES. General Electric is equipped to manufacture all types of electronic tubes — from tubes used in heating and welding, to tubes that control motors and machinery; to tubes that transmit, receive and amplify sound and signals; to tubes that measure light, sort, count, "see" through solids. Long experience, modern manufacturing equipment, rigid control and inspection contribute to the exceptionally high quality and dependability of G-E tubes. Shown (left to right) are the ignitron, thyratron, and kenotron.

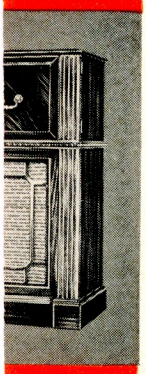

FM AND AM TRANSMITTERS AND RECEIVERS. General Electric's unequaled experience in short-wave broadcasting is well known . . . all of America's 100 kw international broadcast transmitters have been built by G.E. G.E. has equipped more than a third of existing FM broadcast stations, and supplied a large portion of the 600,000 FM receivers now in use. G.E., in fact, is the only manufacturer with experience in building the complete FM system — including transmitter, antenna, and home receiver. Shown (left to right) are G-E FM and AM transmitters and G-E radio-phonograph combination incorporating AM and FM.

TRANSMITTING TUBES. General Electric has probably made more important contributions to the development of transmitting tubes than any other manufacturer. For example: G.E. developed tubes and circuits that produced the high-frequency oscillations that make broadcasting possible. G.E. developed the first water-cooled transmitting tube which made high-power broadcasting possible. G.E. developed the hot-cathode mercury-vapor tubes which cut broadcasting power losses tremendously. Shown are four typical G-E transmitting tubes.

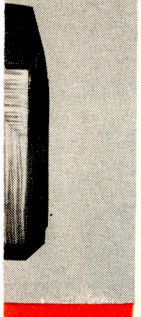

TELEVISION TRANSMITTER AND RECEIVERS. Evidence of G.E.'s leadership in studio planning and station equipping is Television Station WRGB, in Schenectady, New York. This televison "workshop" is one of the finest and most complete studios of its kind in the world. From WRGB will come much of programming knowledge and technical development which will bring the post-war expansion of television. Shown (left to right) are WRGB's studio, transmitter, and G-E AM and television receiver with FM for television sound.

EMERGENCY COMMUNICATION. It's coming! — two-way FM radio in every municipal police car. The G-E FM system for cities, towns, and public utilities provides amazing freedom from static and extremely low noise levels. General Electric AM police radio will be used in the wider areas covered by state and county public safety departments. Here, again, G.E.'s broad experience will provide unusually dependable emergency radio equipment.

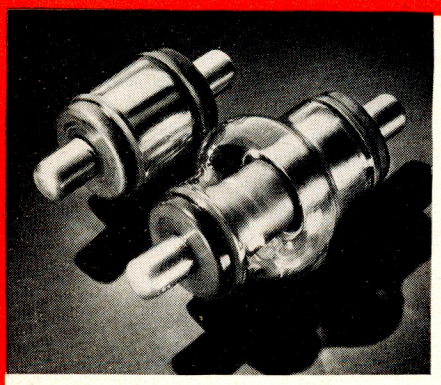

CAPACITORS. General Electric has pioneered and developed a new, unique line of vacuum capacitors, rated from 7500 to 16,000 volts peak and from 25 to 100 mmfd. These circuits are common to military, aircraft, and amateur radio equipment.

The small size of the G-E vacuum capacitor is of especial importance in the design of high-frequency circuits. Only a tenth the size of similarly rated air capacitors, these capacitors also provide an internal voltage breakdown characteristic which is unaffected by altitude.

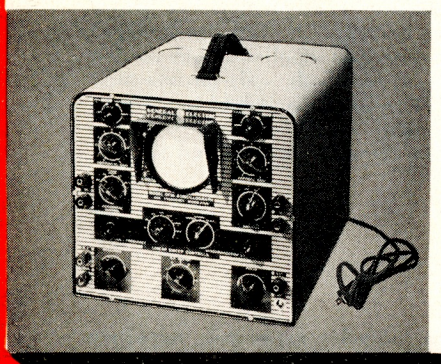

TESTING INSTRUMENTS. The new General Electric line of laboratory and testing equipment provides an extensive choice of portable, compact apparatus for accurate, rapid maintenance and testing of radio electronic circuits and parts. It includes G-E unimeters, tube checkers, bridges, signal generators, oscilloscopes, and other instruments — all planned for easy, error-free reading and long, dependable service. Shown at left is G-E oscillograph and frequency modulator for AM, FM, and television-receiver and transmitter trouble-shooting.

THE ELECTRONIC "BOOKS OF THE YEAR"

"How Electronic Tubes Work." Here's an electronics "first reader"—a simple explanation of the basic principles of electronic tubes . . . describes briefly important uses of tubes in industrial electronic equipment. *"How Electronic Tubes Work"* is *FREE*. Filing size—24 graphically illustrated pages.

"The ABC's of Radio." Here's a simple, easy-to-understand "Primer" on radio and its basic circuits . . . how they are designed and how they perform . . . what the fundamentals are . . . the various principles and theories of radio receivers and their service . . . 68 pages, clearly illustrated. *"The ABC's of Radio"* is offered at twenty-five cents in stamps or coin.



For either of these informative brochures . . . address Dept. 6-S, Electronics Department, General Electric, Schenectady, N. Y.

LEADER IN RADIO, TELEVISION, AND ELECTRONIC RESEARCH

GENERAL ELECTRIC

160-C1

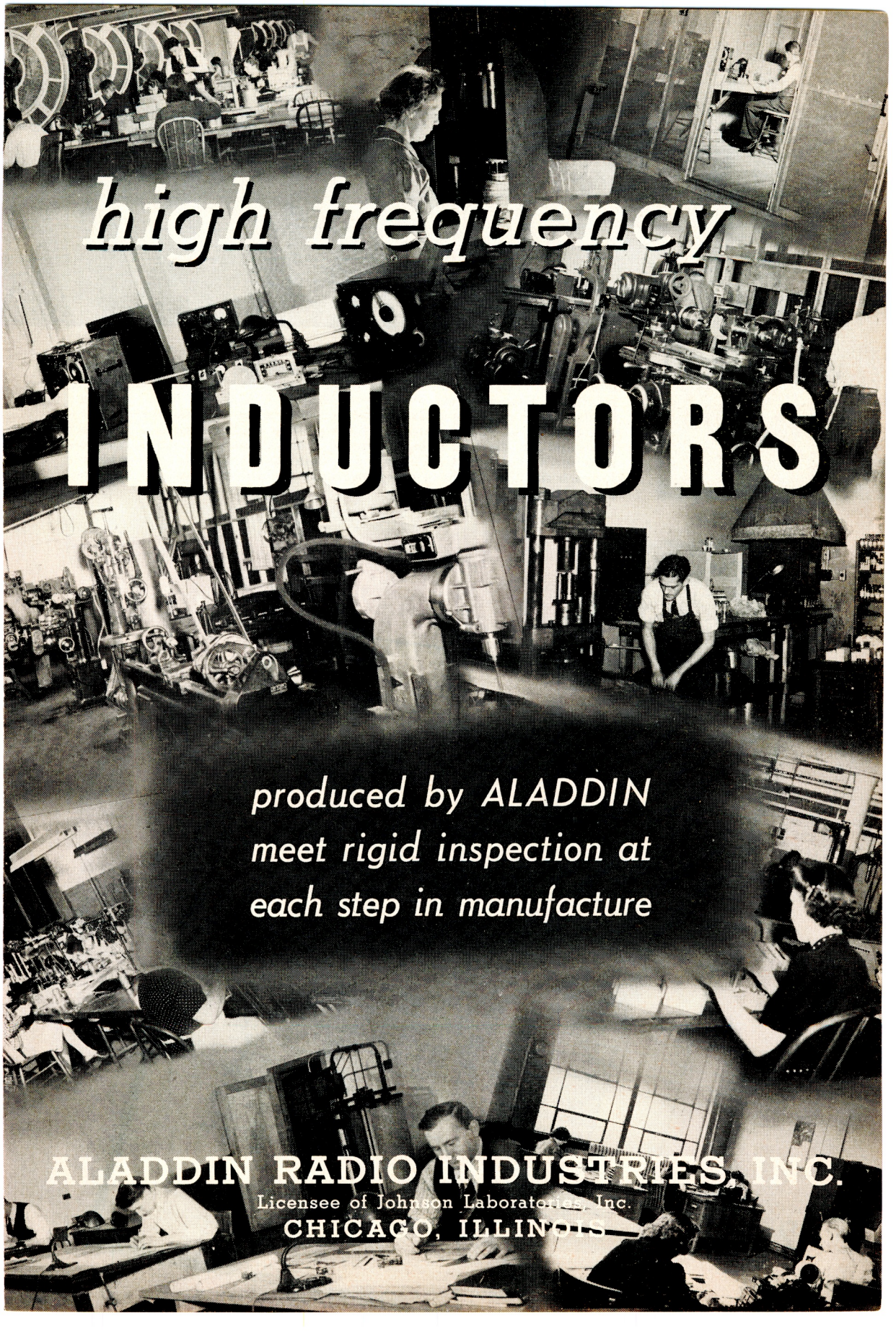
high frequency
INDUCTORS
produced by ALADDIN
meet rigid inspection at
each step in manufacture
ALADDIN RADIO INDUSTRIES, INC.
Licensee of Johnson Laboratories, Inc.
CHICAGO, ILLINOIS

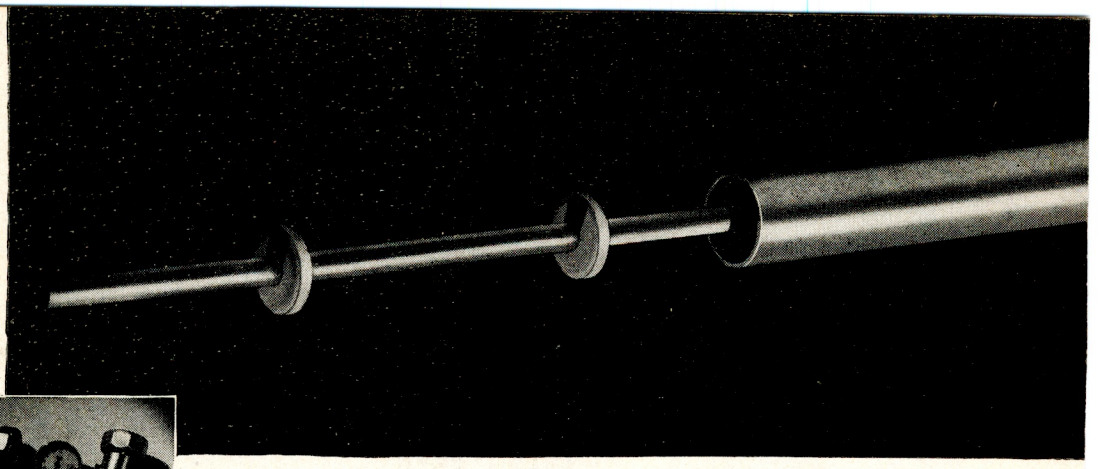

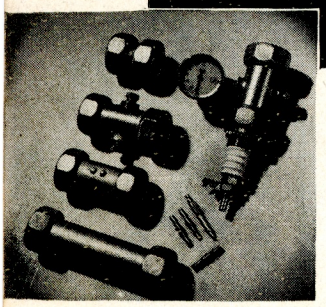

COMMUNICATION PRODUCTS COAXIAL TRANSMISSION LINE provides a radiation-free line of copper or aluminum, designed according to sound engineering principles. Four sizes are available: a flexible $\frac{1}{4}$-inch line with spun-glass insulation for receiving or low power purposes; a new and improved $\frac{3}{8}$-inch semi-flexible ceramic insulated line for low power applications; a $\frac{7}{8}$-inch rigid type; and a $1\frac{5}{8}$-inch ultra high frequency line for high power use. A complete assortment of standardized fittings and maintenance equipment is obtainable for each size line. Years of experience have enabled us to reduce tolerances to a minimum.



MEMORANDUM

For many years now, we've been designing and producing radio equipment for broadcasting systems, commercial communication companies, manufacturers and such government agencies as the Weather Bureau, the Civil Aeronautics Authority and others.

Today, of course, we're up to our necks — and glad to be — working for the United States Army, Navy and Coast Guard. We'd like to serve you now — and we can, if you've the proper priority. But if you haven't . . . we hope you'll be patient until the GA signal comes through and all of us can go ahead with our plans for better commercial and amateur radio.

We promise you, though, that the war's stimulus has prodded us into designing and producing many new items: Auto-Dryaire — an automatic coaxial line dehydrator, improved coaxial cable and fittings as well as much better HF and UHF band-change switches. Of course, Q-Max low-loss lacquer is still tops and we are always ready to supply UHF radiators for land, marine, aircraft and mobile services.

While we're all working for Victory why don't you plan for tomorrow in anticipation of new and improved C.P. gear?

COMMUNICATION PRODUCTS COMPANY

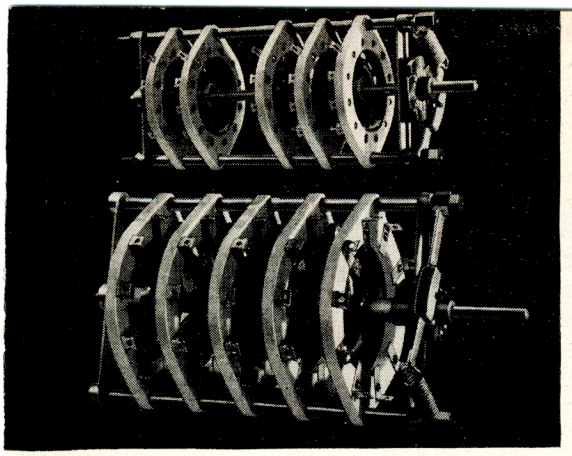

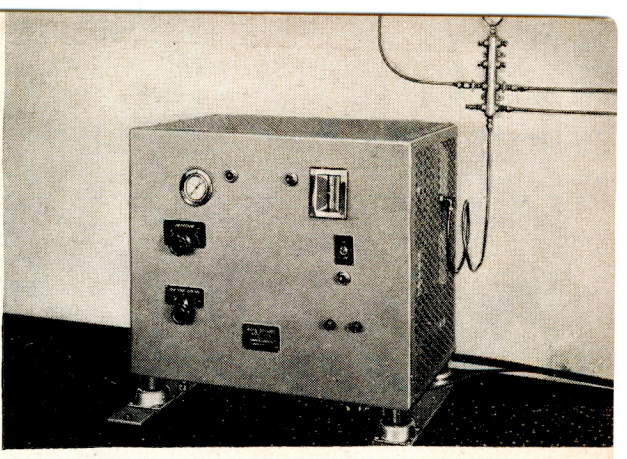

STERLING SWITCHES, with pure silver contacts, are available in two standard sizes for low and moderate power transmitters, laboratory instruments and various electronic devices. Of rugged mechanical design they are adaptable to many circuit arrangements, and are characterized by low turning torque, constant contact resistance and high current rating. Because all conducting paths are of pure silver, "hot-spots" do not develop at contact areas.

AUTO-DRYAIRE, an exclusive development of Communication Products, is a completely automatic device for maintaining coaxial transmission lines at pre-set pressures of moisture-free air. It will function for indefinite periods at the rate of 1000 cubic inches per minute (at such a rate, an "F" cylinder of nitrogen would be exhausted in two hours). Since AUTO-DRYAIRE utilizes the freest commodity—air—it is independent of critical gases and heavy cylinders.

ANTENNAS AND RADIATING SYSTEMS include: standard high frequency rotary beams, half-wave "foldbacks," vertical and horizontal coaxial radiators and ultra high frequency fixed and mobile directive arrays—as well as specialized units to meet individual specifications. Antennas and supporting structures are carefully designed to withstand high wind velocities. They are produced in most conventional metals—steel, copper, brass, and aluminum as well as the less common alloys in order to withstand prolonged exposure where salt water service results in excessive corrosion.

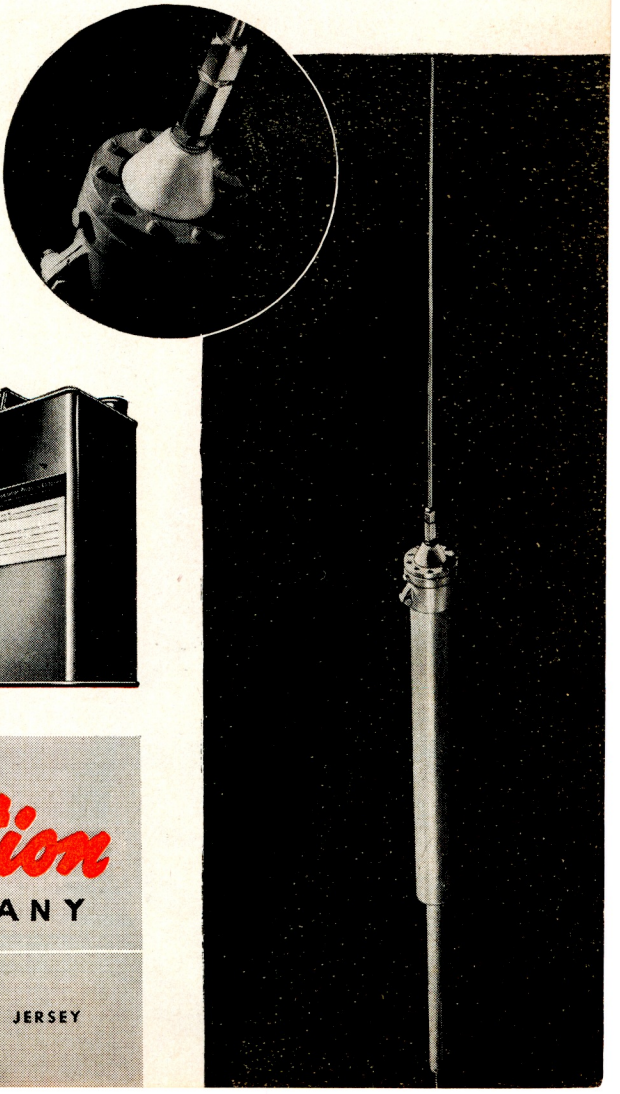

Half-wave coaxial antenna. Designed for maximum strength and minimum weight.

Q-MAX A-27 RADIO FREQUENCY LACQUER is a remarkable new, extremely low-loss, fast air-drying lacquer for use in the treatment or impregnation of radio frequency components. Q-MAX is used for both audio and radio frequency applications, giving protection against mechanical injury and moisture. It serves as a base for the embedment of wire on rigid coil forms, thus reducing slippage. It has high adhesive strength and is extremely flexible. Q-MAX is applied by dipping or brushing. Use multiple applications for extra heavy coating requirements.

Communication

PRODUCTS CP COMPANY

744 BROAD STREET, NEWARK, NEW JERSEY

FACTORY: 346 BERGEN AVENUE, JERSEY CITY, NEW JERSEY

UTC LEADS THE FIELD

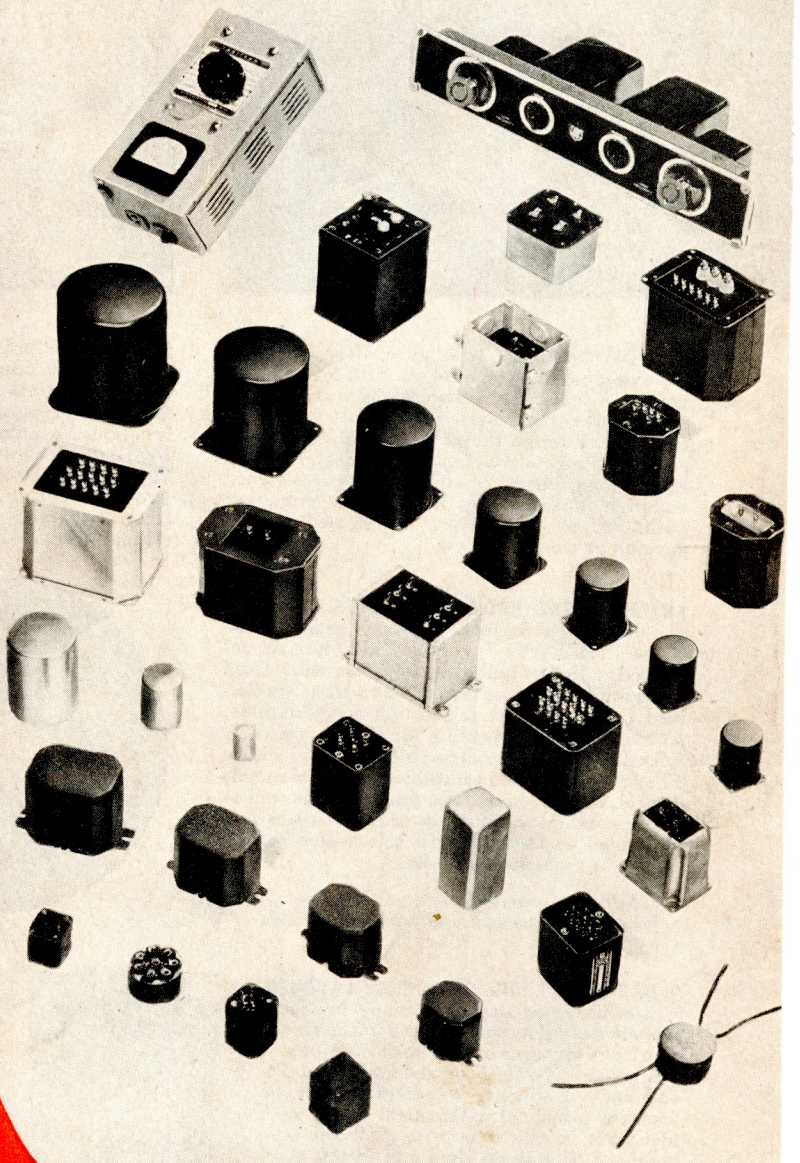

utc

UNITED TRANSFORMER CO.

150 VARICK STREET • NEW YORK 13, N. Y

EXPORT DIVISION: 13 EAST 40th STREET, NEW YORK 16, N. Y., CABLES: "ARLAB



Designs for War...

Hermetic Sealing

The hermetic sealing of transformers covers a wide range of problems, and an equally wide range of applications. The two units illustrated at the left, for example, represent a high voltage transformer for high altitude operation, and an audio unit weighing approximately one ounce.

There is more to hermetic sealing than meets the eye. The illustrations below show some of the factors contributing to the high quality of UTC hermetically sealed units.

May we design a war unit to your application?

For obvious reasons, the units illustrated are not actual war items.

Engineering . . . PRODUCT

Engineering starts with research, continues through the conference table, and then goes through the proving of electrical design, sealing methods, vibration test, etc.



ENGINEERING CONFERENCE

DESIGN PROVING . . . AUDIO





DESIGN PROVING . . . POWER

Engineering . . . PRODUCTION

The production of war units generally requires precise control. This requires the scientific choice of workers for specific operations . . . the use of modern methods throughout . . . and continuous control of quality and production flow.

APTITUDE TESTING assures worker suited to operation



MODERN METHODS induction heating

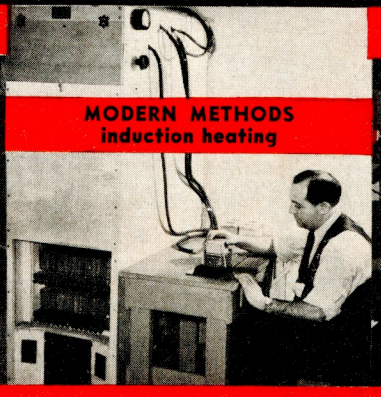

CONTINUOUS CONTROL for uniformity of production



UNITED TRANSFORMER CO.

150 VARICK STREET ★ NEW YORK, N. Y.

EXPORT DIVISION: 100 VARICK STREET NEW YORK, N. Y. CABLES: "ARLAB"


HOGARTH SAYS...
"Sure is swell, the enjoyment us guys way out here get from shortwave broadcasts from the States.
It's GOOD to hear from home... favorite programs... Bob Hope, Kaltenborn, Dinah Shore, Harry James, the Philharmonic, we get 'em all!
It takes a good set to pull 'em in but MY EC-1 never fails me!
A lot of Hams are going to find it easy to fill their logs, when they get an EC-1!
You can't get an Echophone EC-1 until after this fracas is finished— but after that... Oh! Boy!"
ECHOPHONE
COMMERCIAL
"The Ears of the World"
ECHOPHONE RADIO CO.
201 EAST 26TH ST., CHICAGO, ILLINOIS

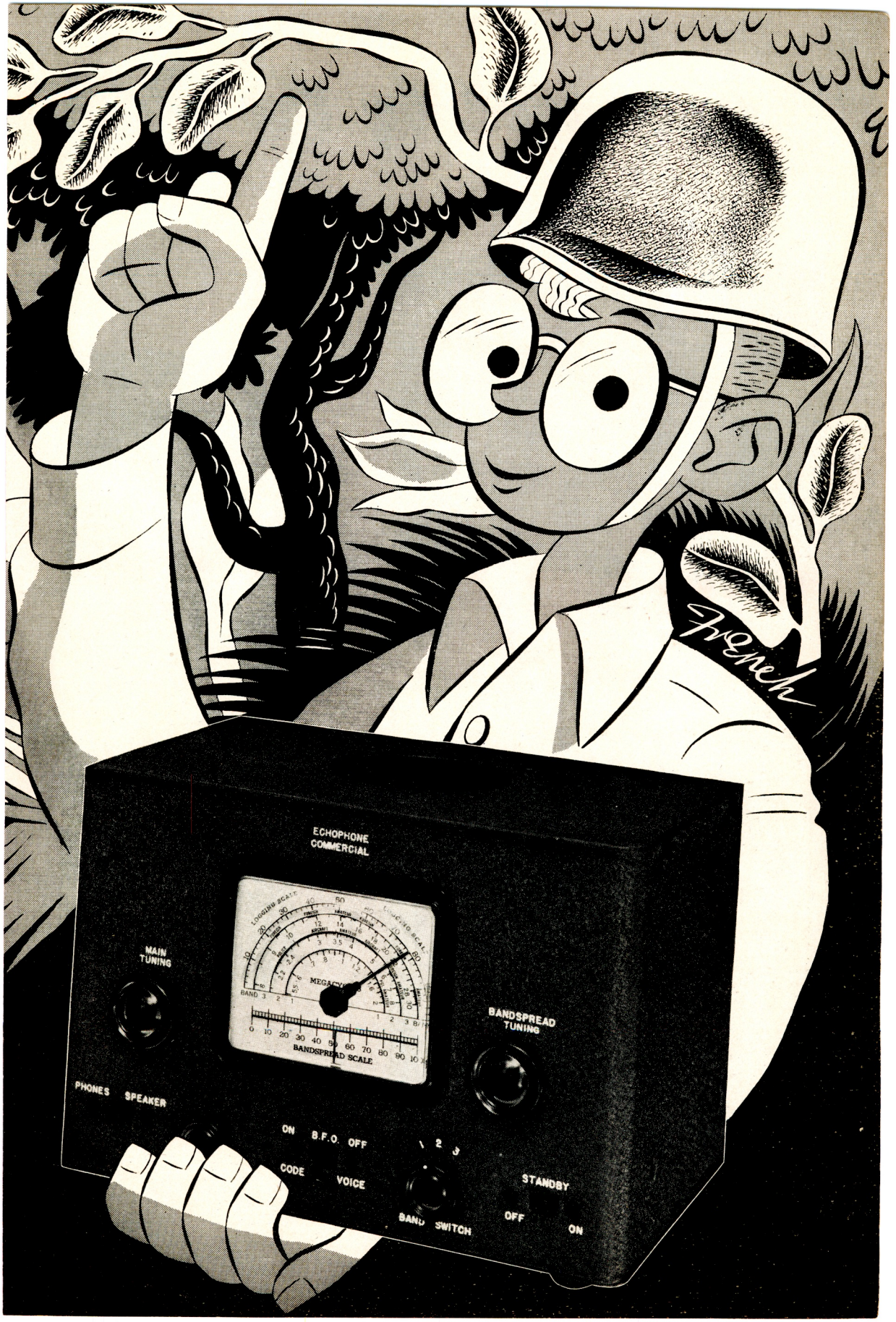
French
ECHOPHONE
COMMERCIAL
MAIN
TUNING
BANDSPREAD
TUNING
BANDSPREAD SCALE
PHONES
SPEAKER
ON
B.F.O.
OFF
CODE
VOICE
1 2 3
BAND SWITCH
STANDBY
OFF
ON

Prepared by the Past..



Model XN-25

6 channel transmitter-receiver unit capable of operation from 6-12-32-110 volts DC or 110-volts AC.

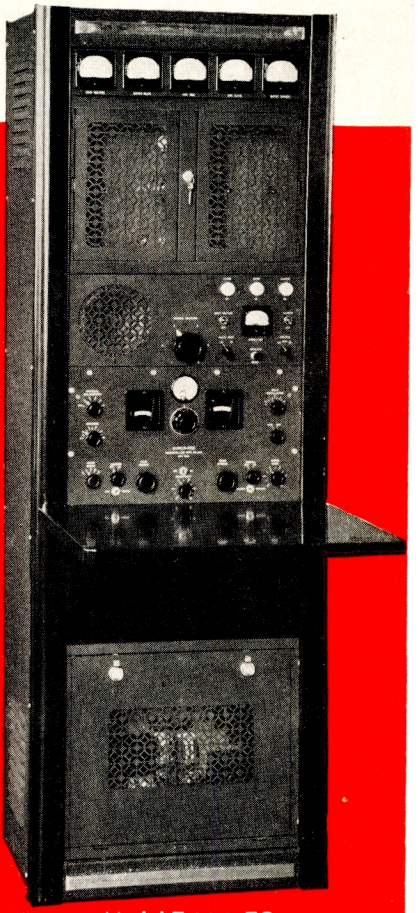

Model T-100-TC

200-watt ground station unit with 6 pre-timed automatic shift channels.

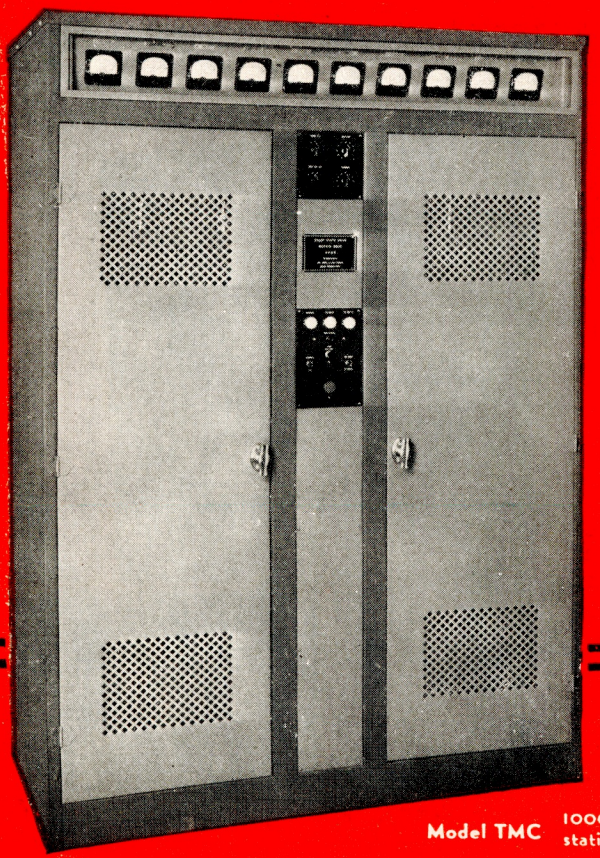

Model TMC 1000- to 5000-watt high-fidelity ground station or broadcast transmitter.

Harvey—Wells

. . . TO PRODUCE FOR VICTORY TODAY . . .

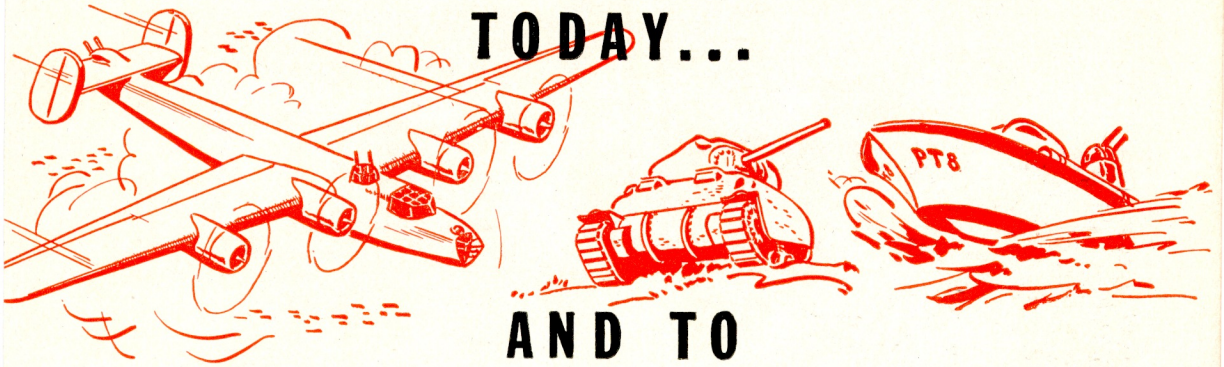

AND TO PLAN YOUR COMMUNICATIONS . . .

For the Future!

When you plan future installations of communications equipment, you want time-tested and proven apparatus — that means HARVEY-WELLS engineered outfits . . . to do the job with sharp, clear and distortion-free transmission and reception, day-in and day-out.

"Prepared by the Past" — through the combined "know-how" of radio engineers, production experts and crystal craftsmen — and augmented now with knowledge broadened by war-time operation, you are assured of BETTER communications equipment, that will save time and multiply efficiency in your organization.

If we have planned for you in the past, let us plan for you in the future. Whatever your communications or special electronic problem, whether aircraft, industrial, ground or police equipment — we are prepared to solve it.

Radio . . .

TELEPHONES
TRANSMITTERS
HIGH-FREQUENCY GENERATORS
ELECTRONICS EQUIPMENT
CRYSTALS

HARVEY-WELLS
Communications inc.

HEADQUARTERS
For Specialized Radio Communications Equipment
SOUTHBRIDGE, MASS.

EXPORT OFFICE
13 EAST 40th ST.,
N. Y. 16, N. Y., U. S. A.

Cent



★

STEATITE
by
CENTRALAB

THE IDEAL HIGH FREQUENCY INSULATOR!

We are equipped to furnish Steatite Coil Forms up to 5 inches in diameter and pressed pieces to approximately 6 inches square. • Centralab's new Steatite plant is equipped to make delivery on orders for special parts in any form. • Our inventories of basic materials are ample . . . and our production facilities adequate to take care of your needs.

There is no shortage of STEATITE.

ralab



Parts by CENTRALAB

Centralab calls upon the resources of more than two decades of production and engineering to provide "parts" especially adapted to today's high frequency requirements.

Much of the engineering and production skill developed for war needs will make important contributions to post war radio.

★

STEATITE INSULATORS
HIGH FREQUENCY CIRCUIT SWITCHES
CERAMIC TRIMMERS

★

WIRE WOUND CONTROLS
VOLUME CONTROLS
CERAMIC CAPACITORS

★

Centralab

Division of GLOBE-UNION INC., Milwaukee

71

"Give Us Tubes That Last Longer"... Is The Cry

AND RCA ENGINEERS

RCA
872-A / 872
Half-Wave Mercury-Vapor Rectifier
$7.50



Replacing the 872 and 872-A, this new tube gives you better results for less money. A special alloy for the cathode base yields increased emission with lower tube drop, enables the tube to withstand larger surge currents without injury to cathode coating. And thermal efficiency has been greatly increased. Net result: better performance, longer life. (Note: RCA 8008 is a companion tube similar to type 872-A/872. The electrical specifications of each are identical. Type 8008 is equipped with heavy duty base and is particularly recommended for use in new equipment.) RATINGS: Filament Voltage, 5 volts; Filament Current, 7.5 amperes; Peak Inverse Voltage, 5 age, 10,000 volts, max.*; Peak Plate Current, 5 amperes, max.; Average Plate Current, 1.25 amperes, max.
*For condensed-mercury temperature of 20-60° C.

RCA
833-A
Transmitting Triode
$76.50

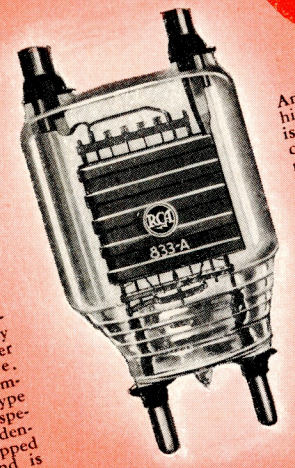

An outstanding feature of this high-power air-cooled triode is its famous RCA zirconium-coated anode, permitting 44% more input and 33% more plate dissipation under CCS conditions than were possible with its predecessor, the 833. Designed for use as an r-f amplifier, class B modulator, and oscillator. This is one of RCA's most powerful glass-type triodes. Built for long life. RATINGS: Filament Voltage, 10 volts; Filament Current, 10 amperes; Amplification factor, 35; D-C Plate Voltage, 4,000 volts, max.*; Plate Current, 500 milliamperes, max. Plate Dissipation, 400 watts, max.*
*CCS rating with forced-air cooling for Class C telegraph service.



ASK FOR THIS BOOK

"TIPS ON MAKING TRANSMITTING TUBES LAST LONGER." Helps you get maximum life from your old tubes. Ask for copy. Address: Radio Corporation of America, Commercial Engineering Section, 479 South 5th Street, Harrison, New Jersey.



ARE DOING IT!

RCA 849
R-F and A-F Power-Amplifier, Oscillator, Modulator
$120

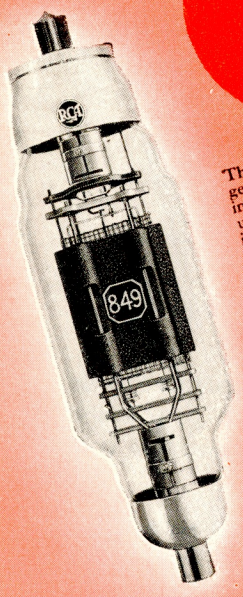

The real value that tube users get from many tube engineering improvements largely depends upon the manner in which the improvements are utilized in the overall designs. For example, the famous RCA zirconium-coated anode, used in the RCA-849, could have been applied primarily to the purpose of giving this tube a purpose increased rating. Or it greatly be utilized as RCA has done—to produce a tube which, operated at a conservative rating, would yield a very considerable increase in the operating life of the tube. In these days, dependable performance, plus long tube life, is most needed. And that is exactly what you get with the long-service RCA-849. RATINGS: Filament Voltage, 11 volts; Filament Current, 5 amperes; Plate Voltage, 2500 volts, max.*; Plate Dissipation, 400 watts, max.*
*For Class C telegraph service.

RCA 828
Beam Power Amplifier
$17.50

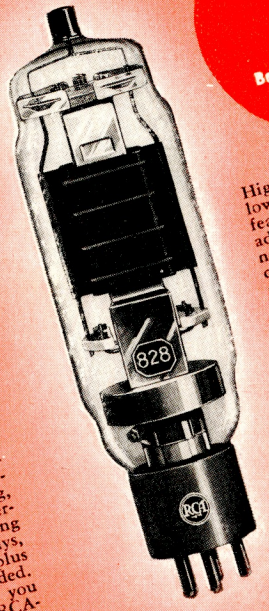

High output with extremely low driving power is the big feature of RCA 828. And in addition, this tube needs no neutralizing in well-shielded circuits. In ICAS class C telegraph service, the 828 will *deliver* 200 watts with only 2.2 watts driving power! Conservatively operated at CCS ratings, the RCA 828 provides high safety factor and long life. Its high power-sensitivity saves vital materials by eliminating intermediate amplifier stages. Maximum frequency—30 mc at full rating; 75 mc at reduced rating. RATINGS: Filament Voltage, 10 volts; Filament Current, 3.25 amperes; Plate voltage, 1250 volts, max.*; Screen Voltage, 400 volts, max.*; Plate Dissipation, 70 watts, max.*
*CCS rating for Class C Telegraph service.

HOW TO REDUCE TUBE REPLACEMENTS
first...
Choose the Right Tube
second...
Treat Your Tubes Right

RCA

RCA ELECTRON TUBES

PROVED IN COMMUNICATIONS' MOST EXACTING APPLICATIONS



RME

Dependability . . .

PROVED IN WAR AND

Since 1933, R M E radio communications equipment has served dependably in all corners of the globe.

Now, with the world at war, this reliable equipment is proving the merits of the precision manufacturing processes used by its builder. R M E equipment and accessories are in the thick of the fight on land and sea.

Always it has been the policy at R M E to provide "the finest quality radio products at the lowest possible cost" and a tremendous following of friends and customers has been built as a result of this guiding rule.

The research and manufacturing skill that goes into each R M E product comes from engineers of long and practical experience. They are men who study and "live with" the problems and needs of both amateur and commercial radio. And they're determined to continue the reputation R M E has established for dependability and quality in its communications equipment.

In the post-war world, R M E equipment will be the choice of thousands . . . make it your choice, too.





PEACE ....

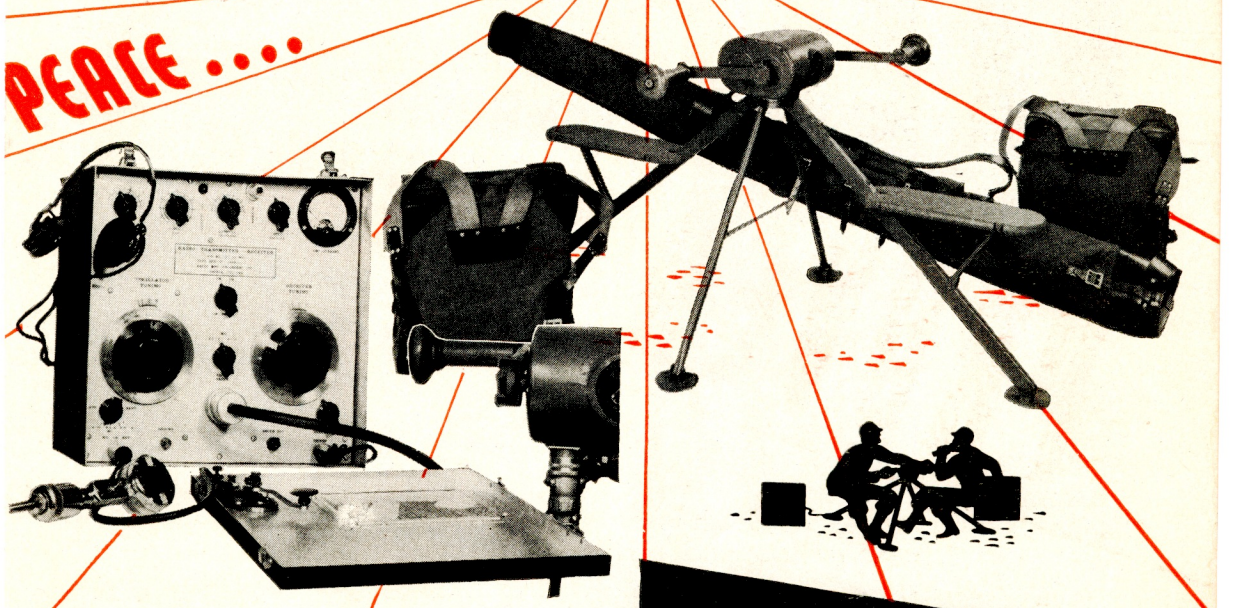

Portable Transmitter-Receiver, Type SPD 27, ready for field use. Illustration shows this compact unit taken down and packed in carrying bags for easy transportation.

Here is the R M E SPD Series Fixed Frequency Receiver. It is in use by airports, barge lines, State Police, armed services and others requiring fixed tuning equipment.

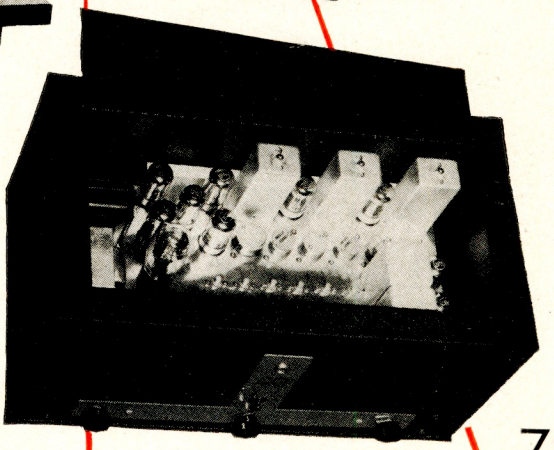

75

RME

FINE COMMUNICATIONS EQUIPMENT

RADIO MFG. ENGINEERS, INC.

Peoria 6, Illinois U. S. A.

METAL HOUSINGS

for

COMMUNICATION APPARATUS

Custom-quality is a characteristic of skillful workmanship—the result of years of specialization.

Par-Metal Products have this quality—plus the virtues of ruggedness and economy as well.

Write for Catalogue No. 41-A.

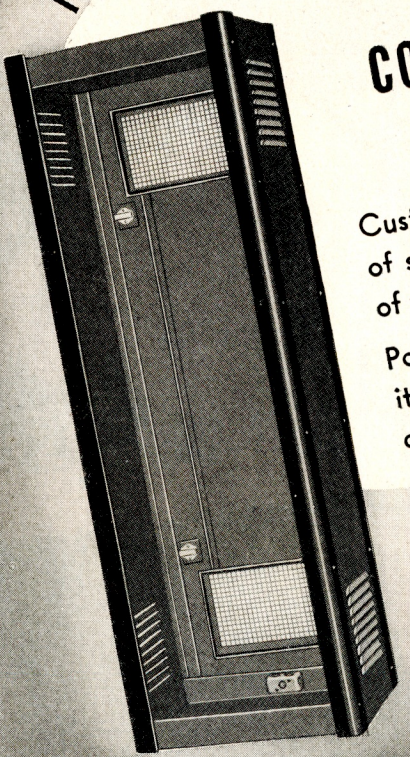

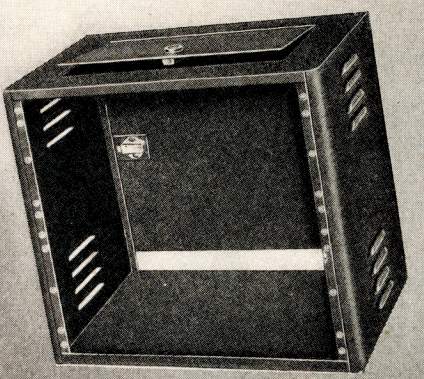

• CABINETS • CHASSIS
• PANELS • RACKS

PAR-METAL PRODUCTS CORPORATION

32-62—49th STREET . . . LONG ISLAND CITY, N. Y.

Export Dept. 100 Varick St., N. Y. C.

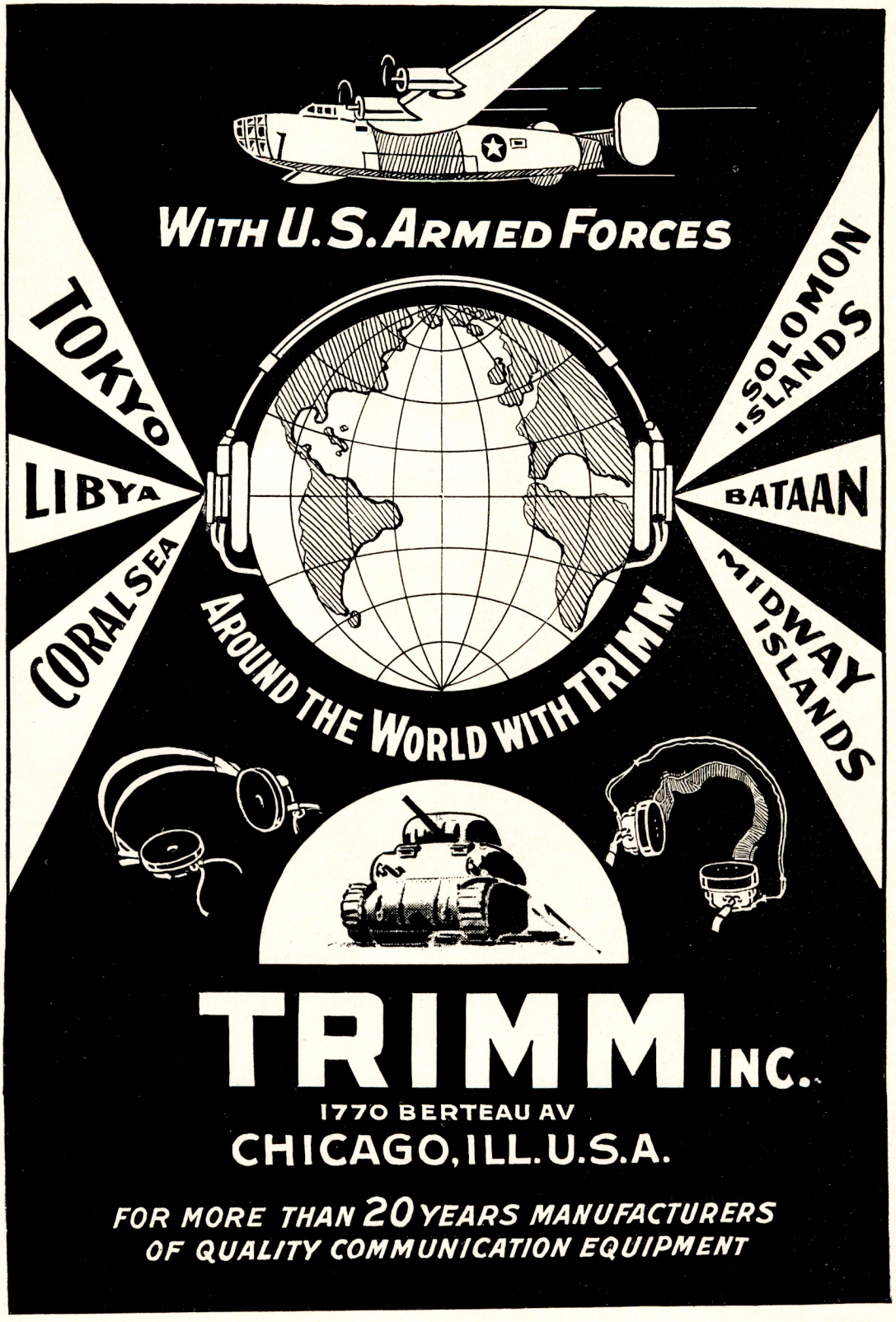
WITH U.S. ARMED FORCES
TOKYO
LIBYA
CORAL SEA
SOLOMON ISLANDS
BATAAN
MIDWAY ISLANDS
AROUND THE WORLD WITH TRIMM
TRIMM INC.
1770 BERTEAU AV
CHICAGO, ILL. U.S.A.
FOR MORE THAN 20 YEARS MANUFACTURERS
OF QUALITY COMMUNICATION EQUIPMENT

DEPENDABILITY • STABILITY • ACCURACY

IRC

REG. U.S. PAT. OFF.

FIXED AND VARIABLE

RESISTORS

Preferred for Performance

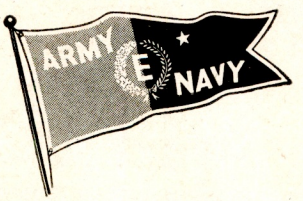

For Correct Use Consult the I. R. C. Resistor Chart.
Send for your copy.

INTERNATIONAL RESISTANCE COMPANY

401 N. BROAD STREET • PHILADELPHIA 8, PA.
U. S. A.



Instruments for measuring frequency including secondary frequency standard and electronic frequency meters. Model 500A Electronic Frequency Meter above



Instruments for measuring voltage in the audio and high frequency range. Model 400A Vacuum Tube Voltmeter above

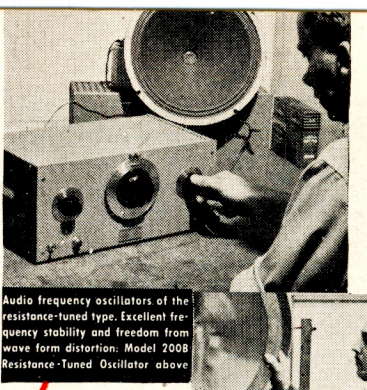

Audio frequency oscillators of the resistance-tuned type. Excellent frequency stability and freedom from wave form distortion: Model 200B Resistance-Tuned Oscillator above

Research into the fields of electrical engineering, physics, chemistry and all phases of science is greatly aided by the use of modern electronic measuring devices. The accuracy with which measurements are made is the yardstick of progress. Time is always an important element. Thus, electronic instruments should combine speed of operation with accuracy.

To gain speed of operation without sacrifice of accuracy, all -*hp*- instruments are designed to operate with a minimum of adjustment. For the first time a variable frequency audio frequency oscillator which does not require a zero adjustment is available. The -*hp*- vacuum tube voltmeter is as simple to operate as a multi-range d.c. instrument.

To accomplish certain measurements more quickly -*hp*- model 205AG incorporates a resistance-tuned audio oscillator, input meter, output meter, attenuator and impedance matching system . . . all in a single unit.

Investigate -*hp*- services today. Write, giving details of your problem so that -*hp*- engineers can give you most accurate information. DO IT NOW!



Audio signal generators providing standardized voltage throughout the audio frequency range. Model 205AG Audio Signal Generator above

FOR GREATER PROGRESS IN ELECTRONICS

hp

Laboratory Instruments
for speed and accuracy

PROMPT DELIVERY. *Due to the demand of war, production facilities have been greatly expanded. Immediate delivery can be made in many cases where orders are covered by high priority ratings.*



Harmonic wave analysers with many new features including variable band width. Model 300A wave analyser above





Instruments for making over-all measurements on audio equipment including total harmonic distortion, frequency response, and hum level. Model 325B Distortion Analyser above

Fully illustrated 24-page Catalog gives complete data and valuable information relative to electronic instruments. Get your copy NOW *for the edition is limited.*

HEWLETT-PACKARD CO. • PALO ALTO, CALIF.

BOX 335-J STATION A, PALO ALTO, CALIFORNIA

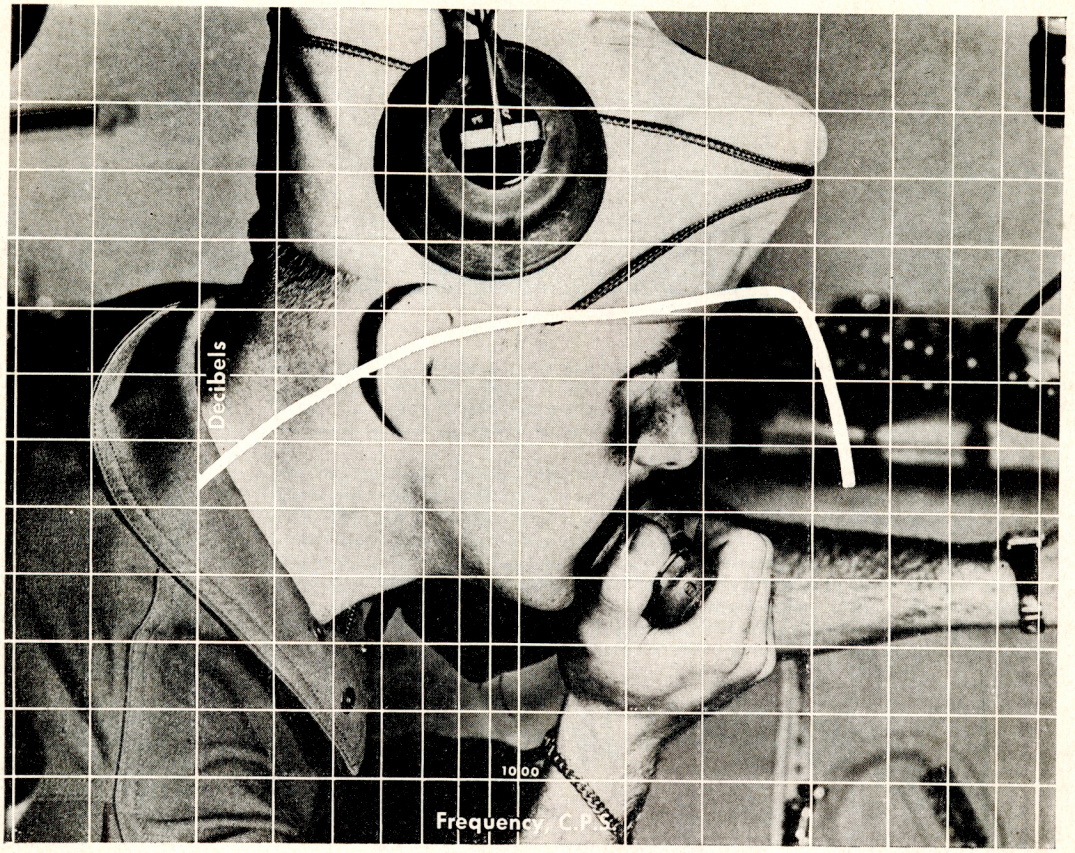

MICROPHONES

designed to bring the message through . .

Microphone performance begins with design. Orders, instructions, information must come through—*audibly.* It is the designing engineer's job to bring the human voice through clearly—to eliminate as much as possible the engine noises and tumult that might garble a vital message.

The proven ability to design and manufacture microphones that serve under such conditions—as well as under other severe conditions that attend combat duty—has made Shure Brothers America's foremost manufacturer of microphones.

ARMY E NAVY

SHURE MICROPHONES

SHURE BROTHERS

225 West Huron Street • Chicago

Designers and Manufacturers of Microphones and Acoustic Devices

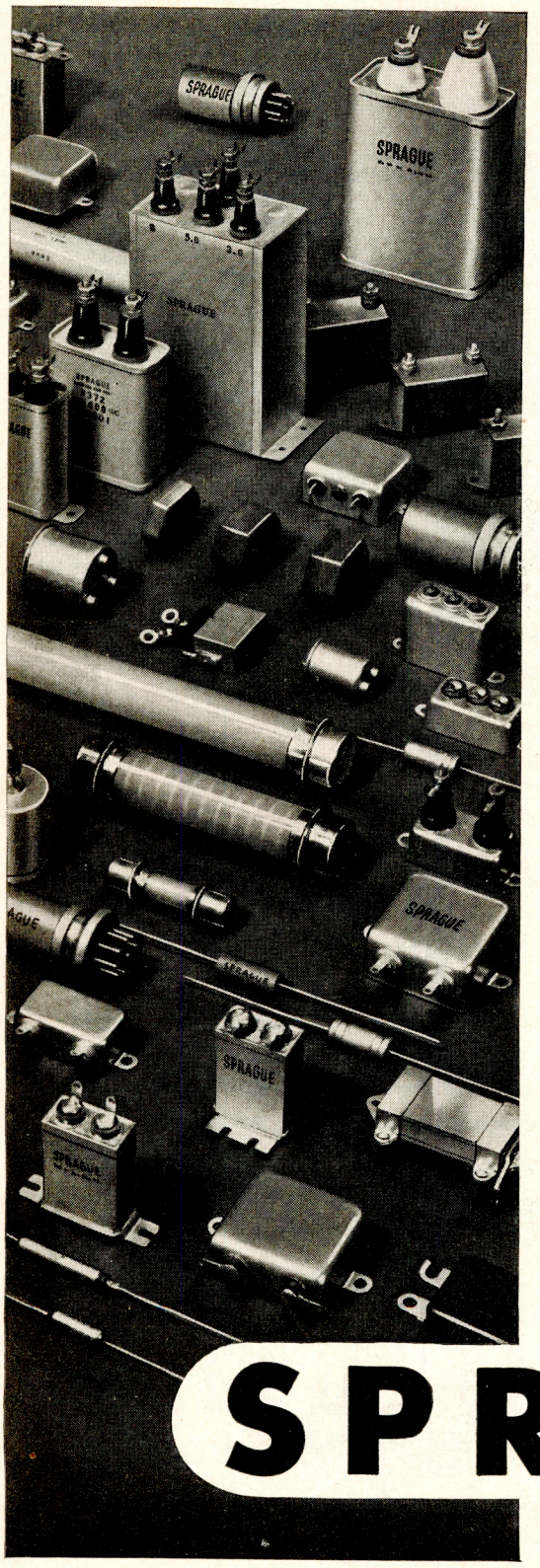

"Plus ça change plus c'est la même chose"*

*(THE MORE IT CHANGES, THE MORE IT IS THE SAME THING)

Over 95% of Sprague capacitors being produced today are different from those of pre-war days —and a lot of hard, painstaking and fast work has gone into making the necessary changes to meet wartime conditions. The primary insulation, the basic dielectric, the fundamental processes—these did not spring full fledged over night, but are "the long result of time." These processes produced good condensers before the war, are producing good condensers now to meet war specifications—and will produce good post-war condensers. Specifications change, the condensers change to meet them, but always Sprague condensers are good condensers. 'Plus ça change——' ".

SPRAGUE SPECIALTIES COMPANY, NORTH ADAMS, MASS.

ARMY E NAVY

- Capacitors for Power-Factor Correction
- High-Voltage Pulse Networks
- Mica Capacitors
- Oil-filled Capacitors
- Paper Capacitors
- Radio Noise Suppression Filters
- Transmitting Mica Capacitors

SPRAGUE

CAPACITORS KOOLOHM RESISTORS

A *mateur*

B *roadcasting*

C *ommercial*

D *iathermy*

E *lectric Welding*

F *ilm-Sound*

G *overnment*
Army, Navy & Aviation

H *igh Frequency Heating*

I *ndustrial Electronics*

...and so on, throughout the "alphabet" of boundless electronic applications

82



UNITED 949-A
Efficient h. f. oscillator tube, one of a great many UNITED types now available.

Efficiency from A to Z

—is assured for long service life when you use UNITED Tubes. Despite the urgent demands upon us for tubes to fill military needs, we have done surprisingly well in keeping other essential requirements supplied.

Write for new catalog giving descriptive data covering an extensive range of tubes for electronic transmitting applications.

UNITED

ELECTRONICS COMPANY

42 Spring Street • Newark 2, N. J.

Transmitting Tubes Exclusively Since 1934

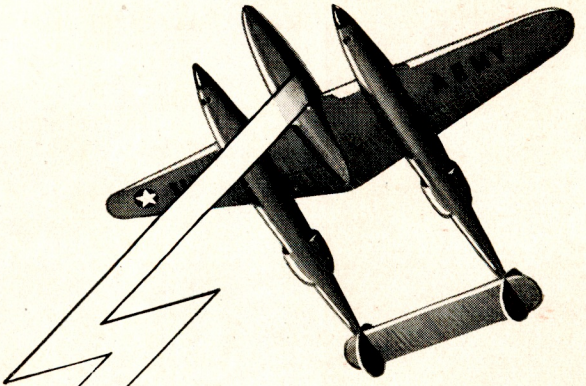

"ORANGE LEADER CALLING . . ." "ROGER!"

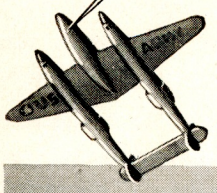

"Getting the message through" is the business of thousands of our ham friends these days.

Some of them are running into their old friend, the Browning Frequency Meter (shown below), which is helping keep certain war rigs accurate.

Some of them will be interested to know that Browning has perfected and proved-in-the-field a balanced-capacitance signal system which has helped relieve the manpower situation in many plants by reducing the need for armed guard patrols. (Descriptive literature on request.)

All of them can look forward to returning to their own shacks in the sure knowledge that when peace comes Browning will be adding to ham operating pleasure with new, even better gear.

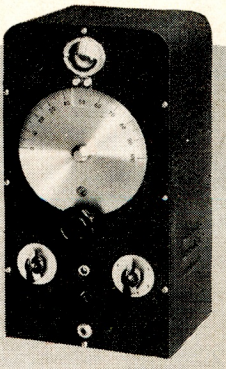

BROWNING

LABORATORIES, INCORPORATED

WINCHESTER, MASSACHUSETTS

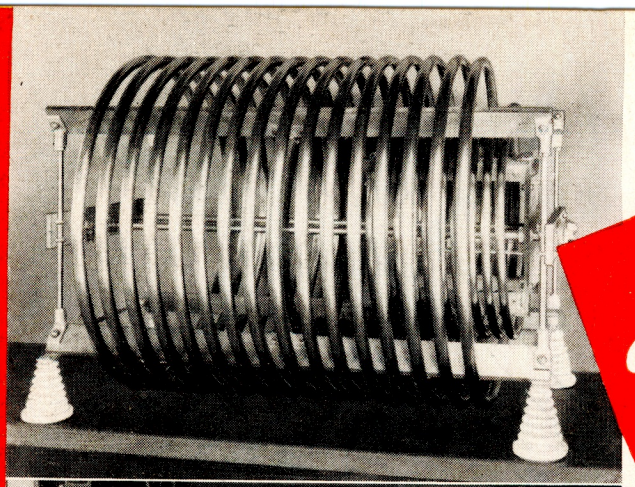

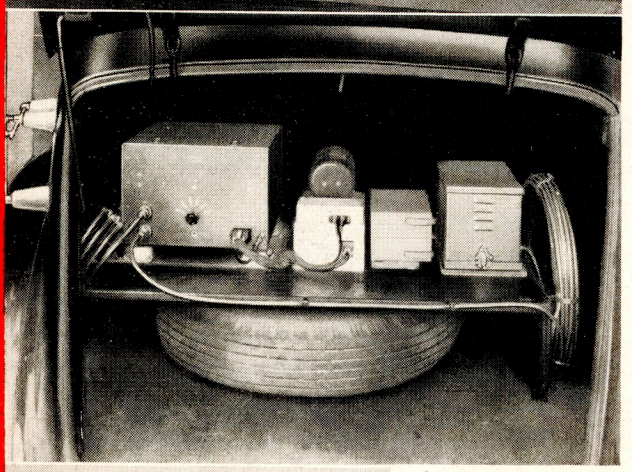

In our SMALL WAY

Shown on these pages are just a few of the products Johnson is contributing to the war effort. Johnson is well and favorably known the world over as a manufacturer of variable condensers, inductors, tube sockets, insulators, plugs and jacks, and miscellaneous transmitter parts.

For years Johnson has manufactured special parts and equipment for Broadcast and Police Stations—most of this equipment engineered and designed for specific applications. Demand for this type of equipment by the armed forces has been many times peace-time requirements.

With Johnson's "know how," research and experimental facilities, and intimate engineering knowledge of the requirements of "parts" it is only natural that Johnson has been called upon to furnish many complete assemblies incorporating these parts. Military secrecy demands that no detailed information be given at this time, but it will make an interesting story after hostilities cease.



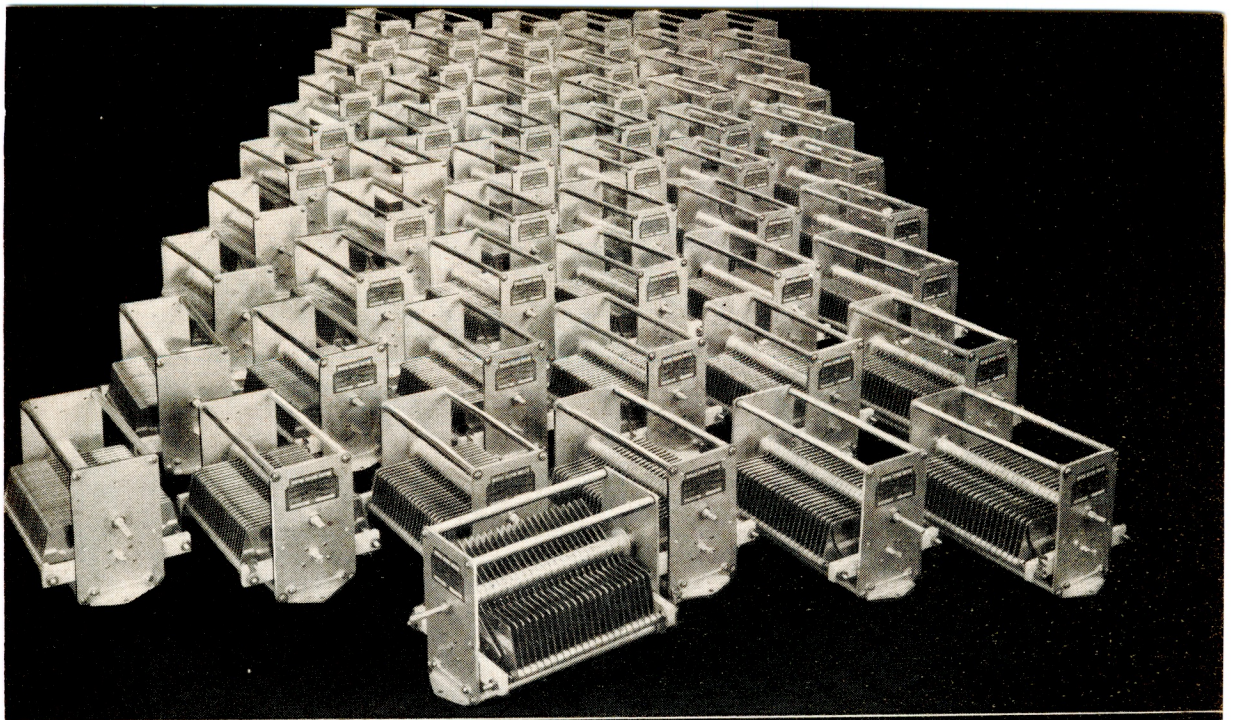

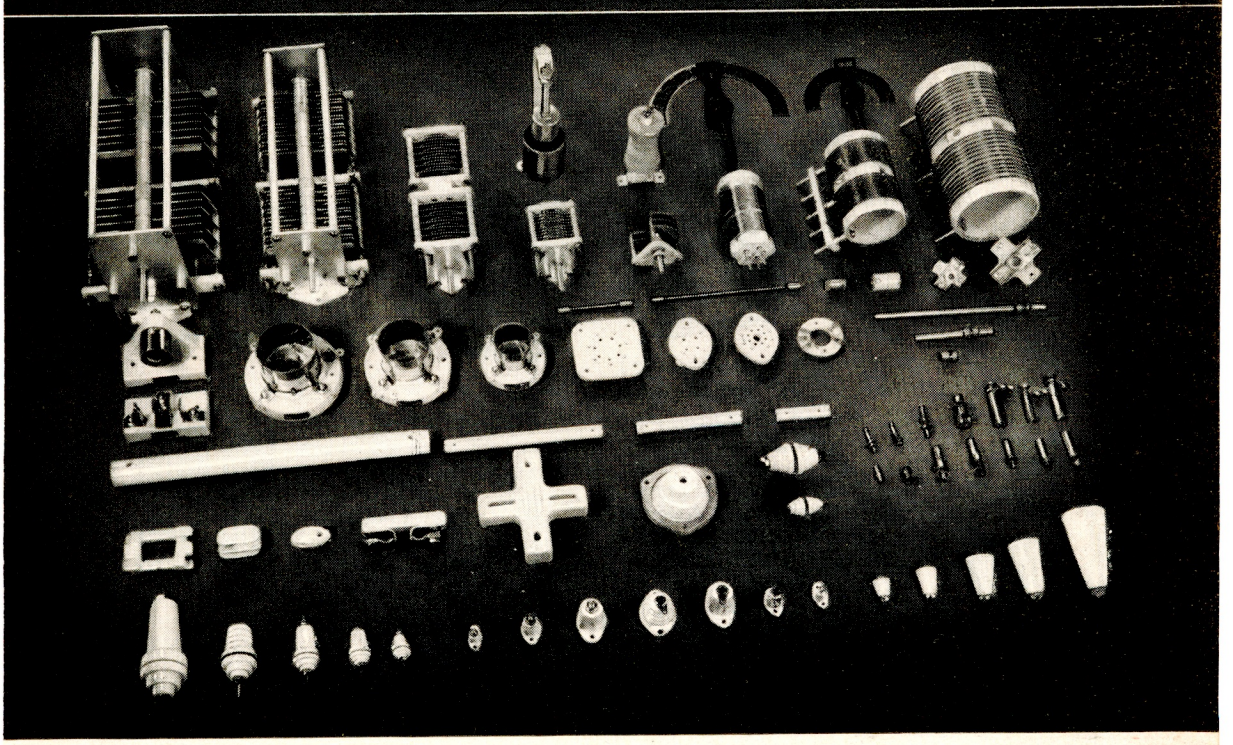

JOHNSON

a famous name in Radio

Ask for
CATALOG 967

E. F. JOHNSON COMPANY • WASECA • MINNESOTA



They're in the Army, Now!..

. . . thousands of amateur radio operators have enlisted with the U. S. Army Signal Corps. And into service with them have gone those familiar black and white striped Burgess batteries. Burgess batteries are recognized by amateurs for quality and economical long life.



No. 4FA Little Six—1½ volts—replaces one round No. 6 cell. Radio "A" type; is recommended for the filament lighting of vacuum tubes. Size, $4\frac{15}{16}$" x $2\frac{5}{8}$" x $2\frac{5}{8}$". Weight, 1 lb. 6 oz.

No. 5308 — 45 volt "B" battery equipped with insulated Junior knobs. Taps at −, +22½, +45 volts. Size in inches, $5\frac{7}{8}$ x $4\frac{3}{16}$ x $2\frac{9}{16}$. Weight each —2 lbs. 15 oz.



No. 2308—A 45 volt super-service, standard size radio "B". Designed for receivers with plate current drain of 10 to 15 milliamperes. Size, $7\frac{1}{8}$" x 8" x $2\frac{7}{8}$". Weight, 7 lbs. 6 oz.



No. F4BP—A 6-volt heavy-duty portable battery, designed for Burgess X109 headlight. Contains four F cells connected in series. Screw terminals and brass knurled nuts. Size, $2\frac{21}{32}$" x $2\frac{21}{32}$" x $4\frac{7}{32}$". Weight, 1 lb. 6 oz.

No. Z30N—45 volt "B" battery. Improved small size. Adapted to radio, portable receivers and transmitters. Screw terminals. Size 3" x $1\frac{7}{8}$" x 5". Weight, 1 lb. 4 oz.

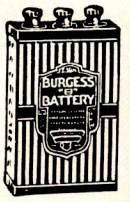



No. 2F2H—A 3-volt radio "A" battery used with portable radios, amplifiers, and special instruments. Size, $2\frac{5}{8}$" x $2\frac{5}{8}$" x $4\frac{3}{8}$". Weight, 1 lb. 6 oz.

No. W30BPX—45 volts. Extremely small and light in weight. Very suitable for personal transceivers used by amateur clubs and radio stations. Equipped with insulated junior knobs. Size, $1\frac{7}{32}$" x $2\frac{29}{32}$" x $4\frac{1}{16}$". Weight, 10 oz.



RECOGNIZED BY THEIR STRIPES
REMEMBERED FOR THEIR SERVICE

BURGESS BATTERY COMPANY

FREEPORT ILLINOIS

Are you regularly purchasing War Bonds or Stamps? Enlist your dollars in the Fight for Freedom—Do it today!

Link

Preferred

FM

Frequency Modulation

RADIO
COMMUNICATION
EQUIPMENT

for
ALL POLICE · FIRE
PUBLIC UTILITY
and GOVERNMENT
SERVICES

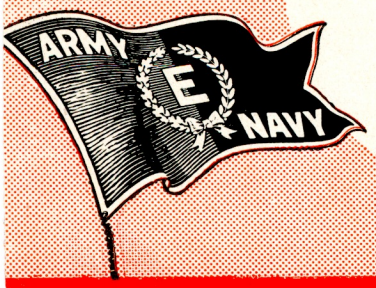

Write for Catalog

87

Fred M. Link

Engineer · Manufacturer
125 W. 17th ST., N. Y. 11, N. Y.
Telephone: CHelsea 2-3838

Tested and Proved in War

TO SERVE YOU EFFICIENTLY IN PEACE

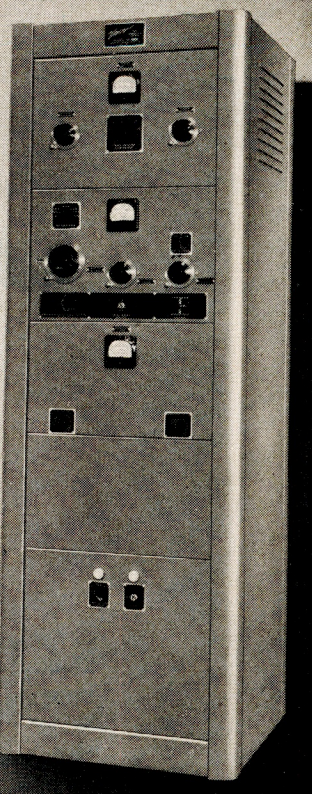

Communication equipment by TEMCO has long been outstanding and widely used where utmost dependability is required. Underlying this preference is the fact that TEMCO equipment is engineered and built with the perfectionist's greater investment of time, materials and wiring skill.

TEMCO equipment is proving its better-built qualities in every branch of military and governmental service . . . under the most rigorous wartime conditions.

Fresh from these exacting tests will come new and advanced transmitting equipment by TEMCO, to serve your civilian broadcasting needs with maximum efficiency.

TRANSMITTER EQUIPMENT MFG. CO., INC.

345 Hudson Street, New York 14, N. Y.

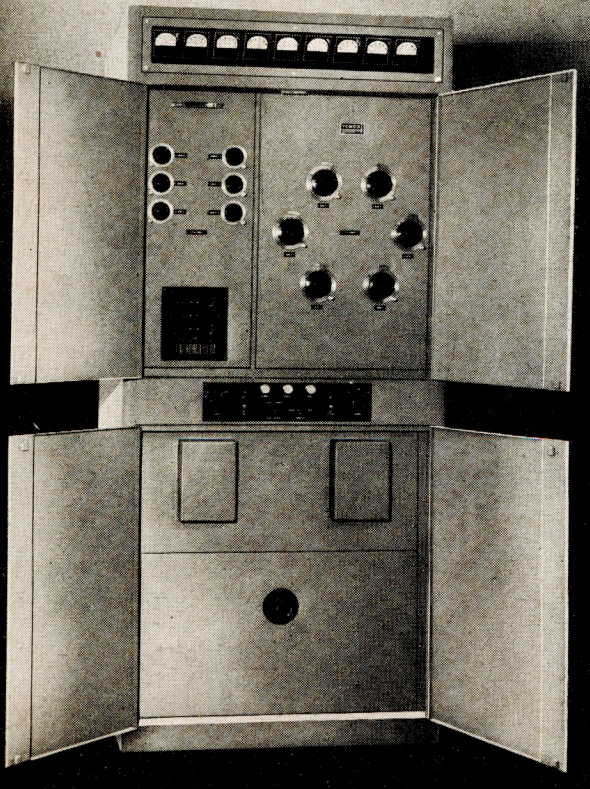

TEMCO Model 250-GSC, 200 watts output, A1, A2, A3 emission; frequency range 2 to 16 megacycles, with provision for 4 crystal controlled frequencies and electron coupled master oscillator.

TEMCO Model 1000-AG-CW—6 frequency motor-driven band changing radio telegraph transmitter. Power output 1000-1200 watts.

TEMCO

RADIO COMMUNICATION EQUIPMENT

DESTINY

in a Rock



From deep within the transparent beauty of Mother Quartz comes a thin radio-active crystal. When diamond-cut and perfectly fashioned it keeps frequency constant in spite of mechanical maladjustment—controls the destiny of our vital war communications!

Scores of scientific steps go into the finishing of each crystal—the kind of precision workmanship you'd expect of Wallace Craftsmen—the kind you'll find in Wallace Peace-time Products.

Cable Assemblies are a far cry from crystals but the same deft handling and enaineering dominates all work flowing through the Wallace Cable Assembly Plant.

Wm. T. Wallace Mfg. Co.

General Offices: PERU, INDIANA

Cable Assembly Division: ROCHESTER, INDIANA

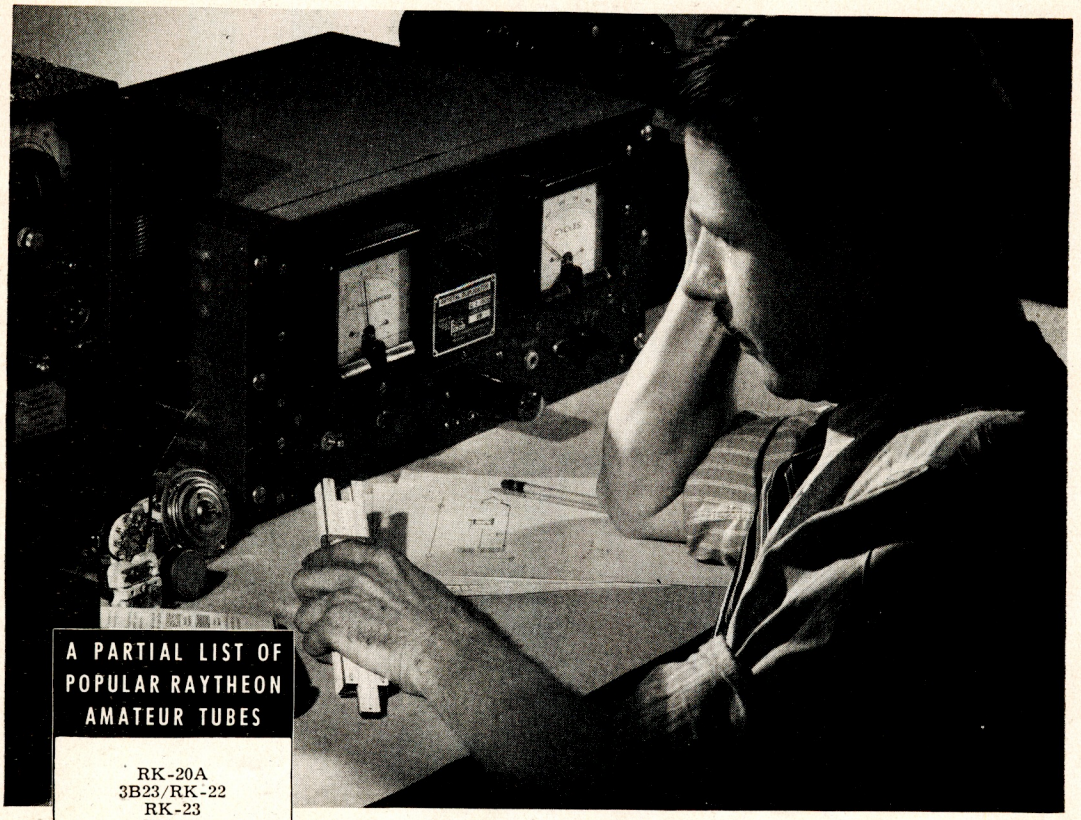

A PARTIAL LIST OF POPULAR RAYTHEON AMATEUR TUBES

RK-20A
3B23/RK-22
RK-23
RK-24
RK-25
RK-28A
2C21/RK-33
2C34/RK-34
RK-38
RK-39
RK-48A
RK-49
RK-59
RK-60
RK-62
RK-63
RK-64
RK-65
RKR-72
RKR-73
RK-75
RX-120
RX-212
RX-215
RX-233A
RK-807
RK-829
RK-836
RK-837
866A/866
872A
954
955
956
957
CK-1003/0Z4A
1005/CK-1005
1006/CK-1006
CK-1007
RK-1625
2050
2051

Imagination . . . is the fountainhead of true progress in the radio industry. The results of the visions dreamed and the ideas projected by the Raytheon engineers is manifested in the practical and potential innovations in the Raytheon line of electronic tubes.

Wartime emergencies have, of course, greatly stepped up the pace of tube developments... progress since Pearl Harbor has equalled the ten preceding peace-time years.

When the next peace conference adjourns, all of these wartime engineering accomplishments will become available to amateurs and the whole radio industry. Raytheon electronic tubes will be built better than ever before: but, more important, the *engineering* of Raytheon tubes will afford undreamed of new horizons to both amateur and commercial radio.

Each of the Four Divisions of Raytheon has been awarded the Army and Navy "E"



RAYTHEON

RAYTHEON PRODUCTION CORP.
Newton, Massachusetts

DEVOTED TO RESEARCH AND THE MANUFACTURE OF TUBES FOR THE NEW ERA OF ELECTRONICS

STANCOR

PROFESSIONAL SERIES PLATE TRANSFORMERS

The best of insulating and conducting materials scientifically applied thruout the coil afford generous margins of safety against electrical failure.

Phenolic side panels with heavy duty insulators insure excellent dielectric characteristics and easy accessibility.

Cast semi-steel end bells provide a rugged mounting and a symmetrically finished appearance.

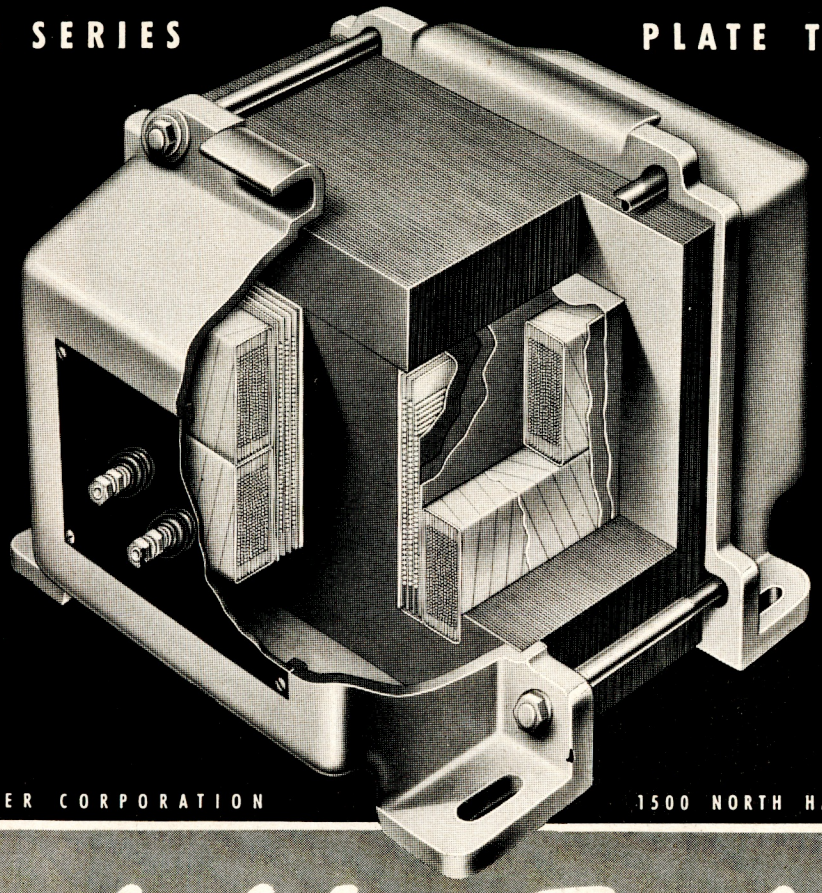

Accurately processed high grade silicon steel stampings, carefully laminated, result in an efficient and low loss core structure.

Vacuum impregnation of coils and thorough penetration of potting compounds furnish complete protection against the effects of humidity and time.

Rigid inspection of materials and progressive testing thruout fabrication result in a quality product.

STANDARD TRANSFORMER CORPORATION 1500 NORTH HALSTED STREET • CHICAGO

Built like a Battleship!

STUPAKOFF

FOUNDED IN 1897

Ceramics for the World of Electronics

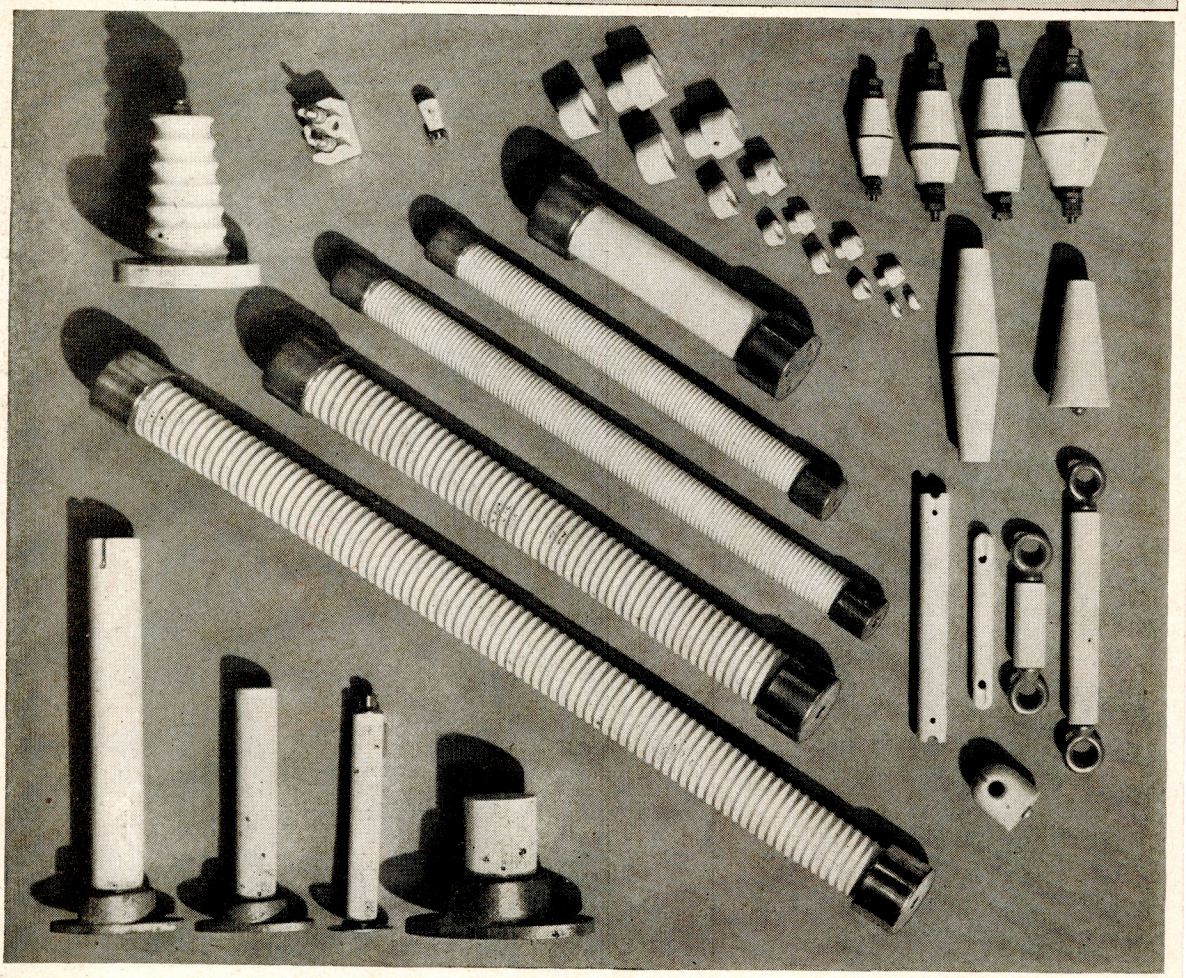

Low Loss Steatite Insulators and Assemblies

In addition to thousands of styles and shapes of low loss Steatite Insulators, we also manufacture many with METAL FITTINGS ATTACHED, ready for use. These include standoff, lead in, strain and other standard lines of Steatite Insulators.

Stupakoff Steatite Insulators are made to your specifications with or without metal attached. In addition to attaching preformed metal fittings, we plate ceramic insulators with ferrous and non-ferrous metals. Subsequent to applying this metal to ceramics, we machine or grind the metal surfaces to precision tolerances, as required.

BUY MORE WAR BONDS

STUPAKOFF

Steatite

INSULATORS

ARMY (E) NAVY

"for great achievement"

92

STUPAKOFF CERAMIC AND MANUFACTURING CO.
LATROBE, PA.

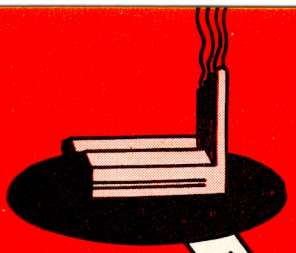

FACTORIES



LITTLE KNOWN SOURCES

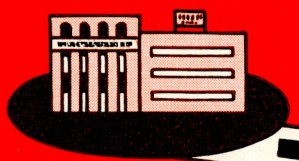

WAREHOUSES

YOUR BEST SOURCE OF ALL RADIO AND ELECTRONIC EQUIPMENT

From the producing factories, from warehouse stocks and from little known sources, TERMINAL draws a steady flow of equipment. Experienced "civilian procurement men" thus keep rotating TERMINAL'S large, complete stocks; are thus able to supply rapidly your pressing needs. For quick and intelligent service, turn to **TERMINAL**

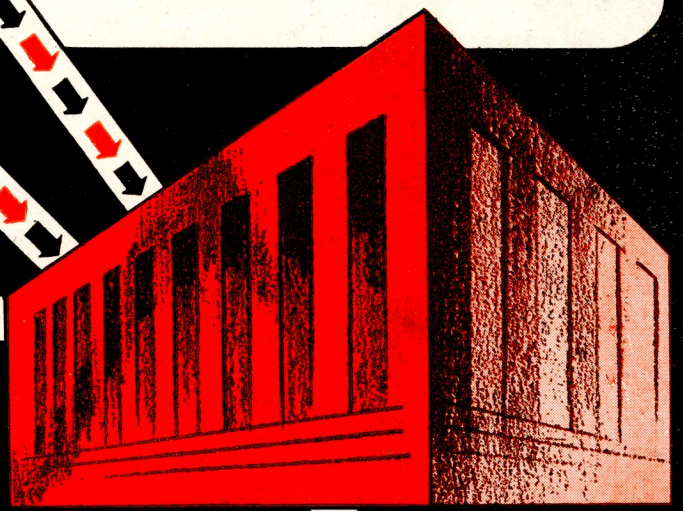

Always Large Stocks of

Condensers
Relays
Insulators
Tubes
Microphones
Sound equipment
Coils
Wire and cable
Crystals
Batteries
Headphones
Plugs
Speakers
Soldering irons
Receivers
Resistors
Keys
Transformers
Clips
Sockets
Vibrators
Etc., etc.

These and Other Famous Brands Always in Stock

Aerovox
Allied Relays
Amphenol
ATR
Amperex
Astatic
Audak
B & W
Belden
Birnbach
Bliley
Brush
Bud
Burgess
Cannon
Cardwell
Centralab
Cinaudagraph
Cornell-Dubilier
Drake
Dunco
Echophone
Eimac
Esico
Electrovoice
Gammatron
Guardian
Hallicrafters
Hammarlund
IRC
Jensen
Jones
Kenyon
Littelfuse
Mallory
Meissner
Millen
Miller
Mueller
National
Ohmite
Par-Metal
Presto
Raytheon
RCA
Shure
Speed-X
Taylor
Thordarson
Trimm
Triplett
UTC
Webster-Rauland
Weston



Free to Purchasing Agents

Radio's Master Encyclopedia with hundreds of pages of catalog data on important radio and electronic equipment, all in one clothbound volume. WRITE TODAY!

YOU ON THE PRODUCTION LINE, IN THE FACTORY AND AT WAR

TERMINAL

RADIO CORP.

85 Cortlandt Street, New York 7, N. Y. Tel. WOrth 2-4416

POWERSTATS

VARIABLE VOLTAGE TRANSFORMERS

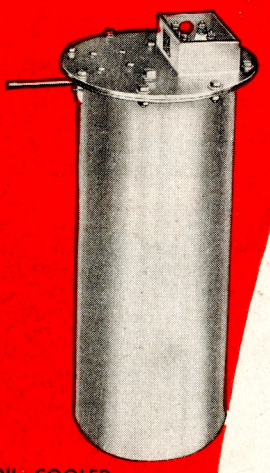

OIL-COOLED POWERSTAT



AIR-COOLED POWERSTAT

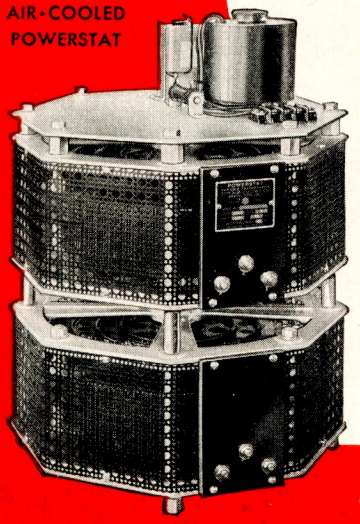

MOTOR-DRIVEN AIR-COOLED POWERSTAT

FOR PUSH BUTTON OR MANUAL OPERATION

Designers of modern electronic equipment are specifying POWERSTAT variable voltage transformers for smooth, continuous control of voltage and power.

Transmitter engineers find POWERSTATS invaluable in the control of plate, filament and bias voltage to specified values. Power output is quickly and accurately adjusted to meet varying requirements. Other applications include telephone regulators, control of induction heating apparatus, X-ray devices, insulation testing, photographic equipment, visual testing panels and manufacture of high power vacuum tubes.

Wherever an efficient, well regulated source of voltage free from wave form distortion is required, specify POWERSTAT variable transformers. Units are available in Motor-Driven types for push button or automatic control, and Manually operated types with handwheel adjustment. Air-cooled and oil-cooled POWERSTATS in capacities up to 75 KVA are standard for single or polyphase operation.

Send for Bulletins
149 LA — POWERSTATS
163 LA — Voltage Regulators

SUPERIOR ELECTRIC CO.
10 LAUREL STREET, BRISTOL, CONNECTICUT

SUPERIOR *Electric Company*

A TYPE FOR IMPORTANT NEEDS

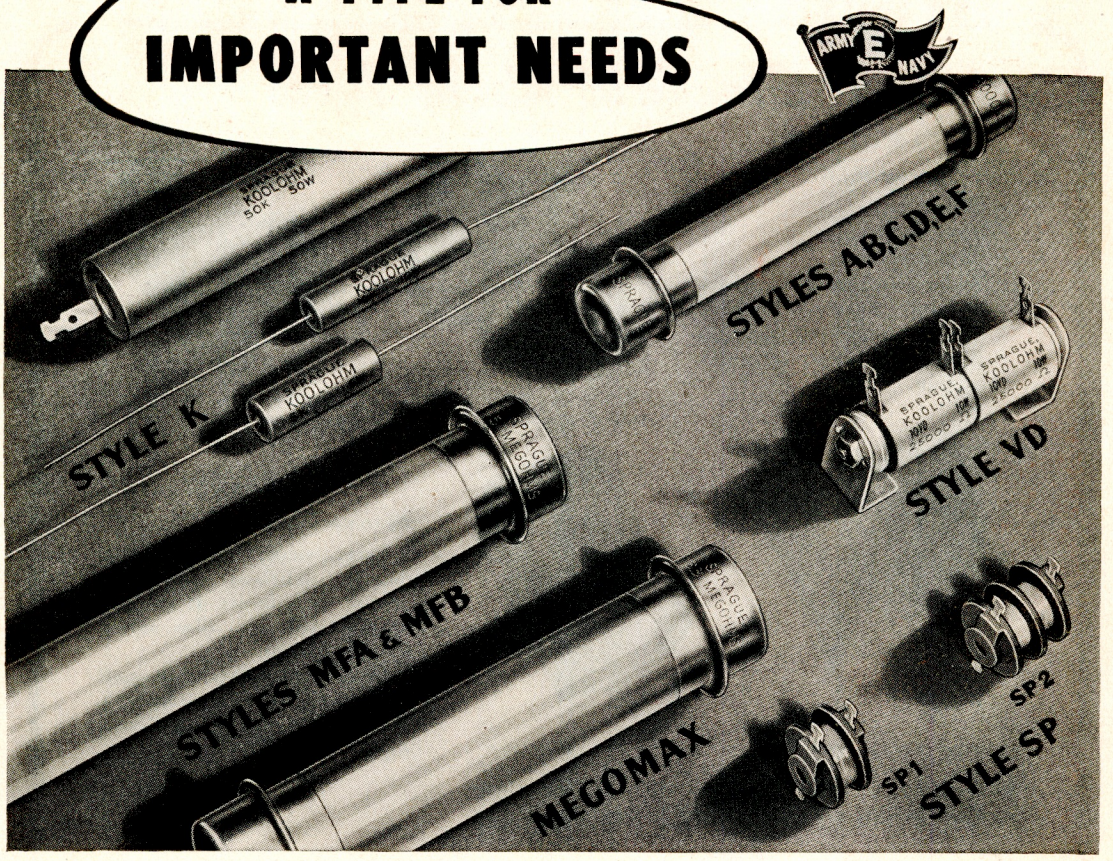

STYLE "K" RESISTORS: Power Wire Wound Resistors 5, 10, 25, 50, and 120 watts.

Wire lead or lug terminals on styles 5K and 10K.

Lug terminals only on styles 25K, 50K, 120K.

Non-inductive windings available.

Various types of mounting, shown in catalog.

STYLES A, B, C, D, E, F: 120, 90, 50, 35, 20, 10 watts.

Hermetically sealed power wire wound resistors. Designed to withstand salt water immersion tests.

Ferrule Terminals for fuse clip mounting.

Non-inductive windings available.

STYLE V. D.: 10 watt and 15 watt wire wound. Resistors designed to make voltage divider sections when mounted end to end on through bolt.

STYLES MFA, MFB and MFC: Precision Meter Multiplier Resistors. Hermetically sealed. Salt water immersion proof.

Type MFA—7.5 megohms max.
Type MFB—4 megohms max.
Type MFC—1 megohm max.

STYLE SP: Wire wound bobbin type resistors. Style SP-1, single section. Style SP-2, dual section.

2.5 watts, continuous rating, per section.

250,000 ohms max. per section.

MEGOMAX: High voltage, high temperature, composition resistor. Hermetically sealed.

Type 1—3400 ohms to 100 megohms
Type 2—6800 ohms to 100 megohms

Voltage and power ratings depend on resistance value.

SPRAGUE SPECIALTIES CO., Resistor Division, NORTH ADAMS, MASS.

SPRAGUE KOOLOHM RESISTORS

REGISTERED TRADEMARK

SIGMA *Instruments, Inc.*

Specialists In Sensitive Relay Engineering and Manufacture

Standard Relay Types

SERIES 4

Recommended for:-

★ Economy
★ Light weight
★ High Speed
★ Moderately severe environment (temperature and vibration)
★ Moderate sensitivity, e. g. Aircraft performance on 30 milliwatt input.

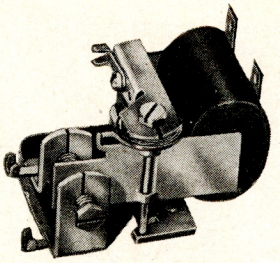

TYPE 4F 1⅜" x 1¾" x 1⅝"
Weight: 2 3/16 oz.

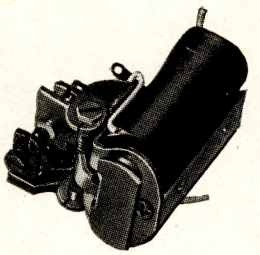

TYPE 5F 1⅜" x 1⅜" x 1⅝"
Weight: 3½ oz.

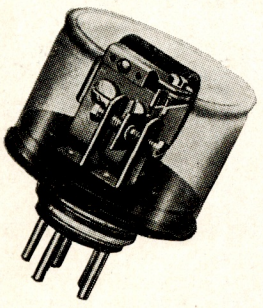

TYPE 4A 2 1/16" dia. x 2" high

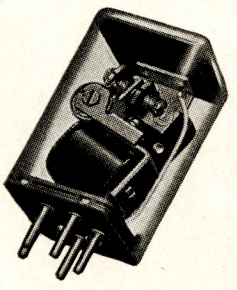

TYPE 4R 1½" x 1½" x 2⅝"

Both Relays Available Mounted on 5 Pin Tube Base in Various Different Enclosures As Pictured Above

SERIES 5

Recommended for:-

★ Exceptionally severe environmental conditions, maintaining precise adjustment at extreme temperatures and after severe shocks (500 g's).
★ Maximum sensitivity in small space and weight, e. g. Aircraft performance on 5 milliwatt input.

Specialized Types

AC Input. Either with shaded pole construction or with midget instrument rectifiers.

High Speed and special chatter-free keying. These applications require special treatment by our engineering department in terms of your particular problem.

Polarized Relays, with 3 position single pole double throw switching (normally both legs open) operating on a small differential between the currents in two opposed coils, and having positive snap action in either direction and positive centering. Ample forces for aircraft conditions.

WRITE FOR COMPLETE DATA, STATING YOUR PROBLEM FOR OUR RECOMMENDATION

SIGMA

Sigma Instruments, inc.

Sensitive RELAYS

78 FREEPORT STREET, DORCHESTER 22, MASS.

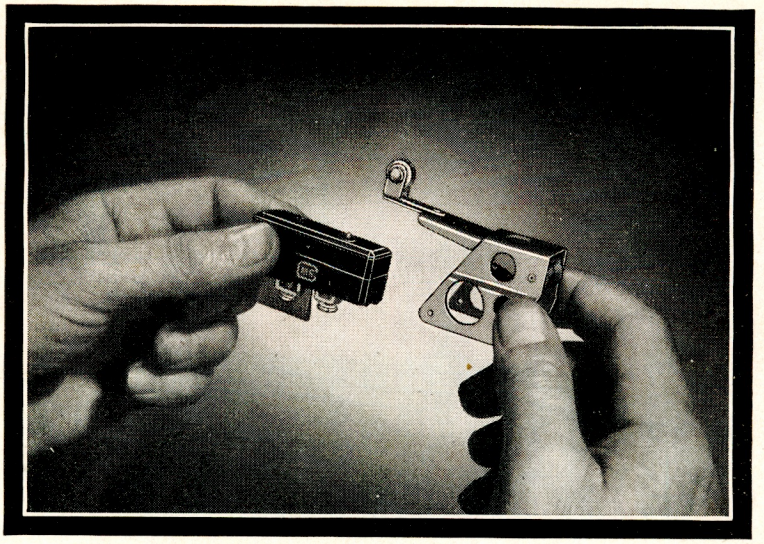

Dependable for Aircraft and Aircraft Radio

The Micro Switch is Small, Lightweight, and Sensitive

The Micro Switch is thumb-size and feather-light — weighs only .067 lbs. It is accurately built to exact standards from precisely made parts, and its performance characteristics can be changed to meet functional requirements. It is built to withstand extremes of temperature. The Air Corps approved Type R-31 Micro Switch illustrated above is specifically engineered for aircraft and is widely used in aircraft radio . . . The Type A actuator illustrated and described below is a new type designed for use with the Type R-31 Micro Switch. Operating force required, depending upon the return spring used, is approximately 6 ounces. This switch is available in single pole, normally open, normally closed and double throw construction . . . The actuator brackets illustrated below are specifically designed to accommodate the Type R-31 Micro Switch. They permit fast installation of the switch, and easy replacement in the field. They require no deviation permit.

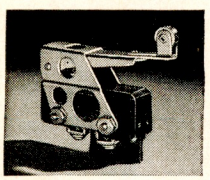

The Type A actuator has a body of cold rolled steel with cadmium plate finish. The lever arm is of the same material. Pre-travel and over-travel values depend on location of spring in the bracket and are approximately ⅛″ pre-travel and ½″ over-travel. Movement differential is .031″ maximum and leverage ratio is 6.2:1. Values given are for roller position at the end of the arm . . . two other roller positions are optional.

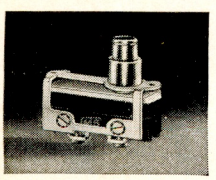

This new Type M-B skeleton bracket saves weight. The plunger on this bracket has a definitely controlled pre-travel and over-travel—a total of ¼″. The Type R-31 Aircraft Micro Switch is sturdily supported in this skeletonized bracket by flush headed screws with lockwashers. The mounting holes in the top of the bracket are on standard $1\frac{13}{16}$″ centers and accept No. 6-32 bolts.

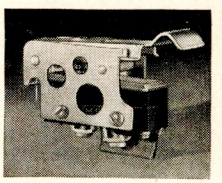

The Type T series bracket has met instant adoption as a throttle warning switch, singly or in gangs. They are operated by cams on the throttle quadrant or dogs on the cables. Any switch held depressed can be instantly opened by the manual release without disturbing others in the gang. As a general use limit switch, the Type T bracket without the release is a sturdy mount and actuator for Type R-31 Aircraft Micro Switch. Two thru-bolts make replacement easy.

Micro Switch Corporation, Freeport, Ill. Branches: 43 E. Ohio St., Chicago (11) • 11 Park Place, New York City (7) • Sales and Engineering Offices: Boston • Hartford • Los Angeles

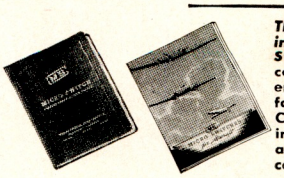

These two catalogs contain full information regarding all Micro Switches. **Catalog No. 60 contains complete details and cross references regarding all Micro Switches for all purposes except aircraft, Catalog No. 70 contains similar information regarding switches, actuators, and housings specifically designed for aircraft use.**

The trademark MICRO SWITCH is our property and identifies switches made by Micro Switch Corporation

©1943

MICRO SWITCH

Made Only By Micro Switch Corporation . . . Freeport, Illinois

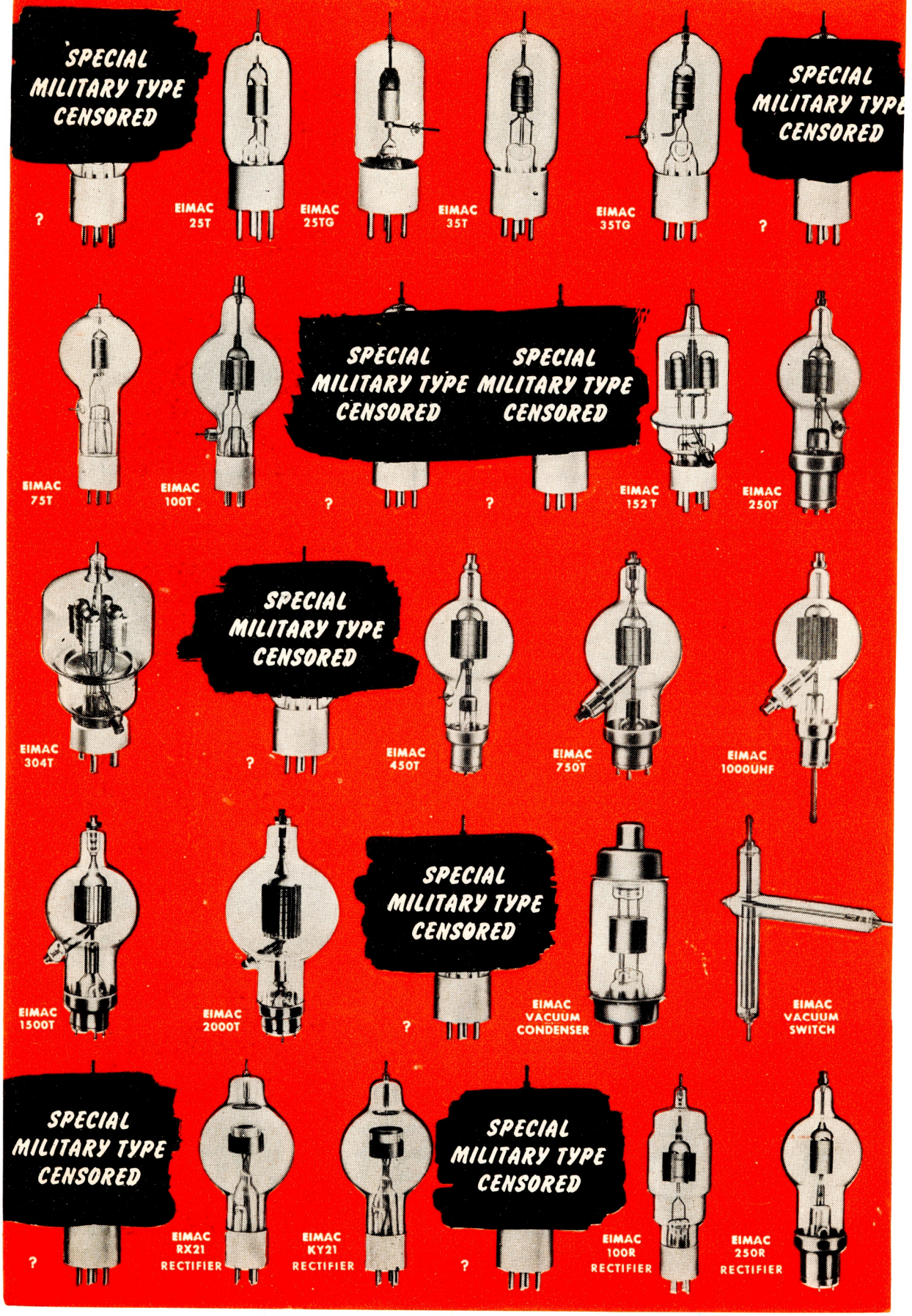
SPECIAL MILITARY TYPE CENSORED
?
EIMAC 25T
EIMAC 25TG
EIMAC 35T
EIMAC 35TG
SPECIAL MILITARY TYPE CENSORED
?
EIMAC 75T
EIMAC 100T
SPECIAL MILITARY TYPE CENSORED
?
SPECIAL MILITARY TYPE CENSORED
?
EIMAC 152T
EIMAC 250T
EIMAC 304T
SPECIAL MILITARY TYPE CENSORED
?
EIMAC 450T
EIMAC 750T
EIMAC 1000UHF
EIMAC 1500T
EIMAC 2000T
SPECIAL MILITARY TYPE CENSORED
?
EIMAC VACUUM CONDENSER
EIMAC VACUUM SWITCH
SPECIAL MILITARY TYPE CENSORED
?
EIMAC RX21 RECTIFIER
EIMAC KY21 RECTIFIER
SPECIAL MILITARY TYPE CENSORED
?
EIMAC 100R RECTIFIER
EIMAC 250R RECTIFIER

first choice of the leading engineers throughout the world... First in the important new development in radio. The only tubes unconditionally guaranteed against premature failures caused by gas released internally.



- **Eimac Tubes in the Ground Stations of the Major Airlines.** Eimac 450T tubes are in use by practically every major airline today.



- **Eimac Tubes in Instrument Landing Equipment.** There are several of these systems in existence which use Eimac tubes.

- **Eimac Tubes and Frequency Modulation.** FM and Eimac tubes have been close companions from the very start of Major Armstrong's experiments.



- **Eimac Tubes in Police Radio Communications.** Police radio engineers from Connecticut to California are loud in their praise of the service of Eimac tubes.

- **Eimac Tubes have gone to War.** With almost machine gun rapidity, Eimac tubes have been adopted by one after another of the peacetime services. Naturally Eimac was among the first to be drafted into war.



- **Eimac is the proud possessor of two Army-Navy "E" Flags.** First to the San Bruno Plant in September, 1942. Second to the Salt Lake City Plant in July, 1943.



EITEL-McCULLOUGH, INC., SAN BRUNO, CALIF.

Plants Located at: San Bruno, Calif., Salt Lake City, Utah

Export Agents: FRAZAR & HANSEN, 301 Clay Street, San Francisco, California, U. S. A.

Follow the leaders to **Eimac** REG. U. S. PAT. OFF. **TUBES**



precision-built

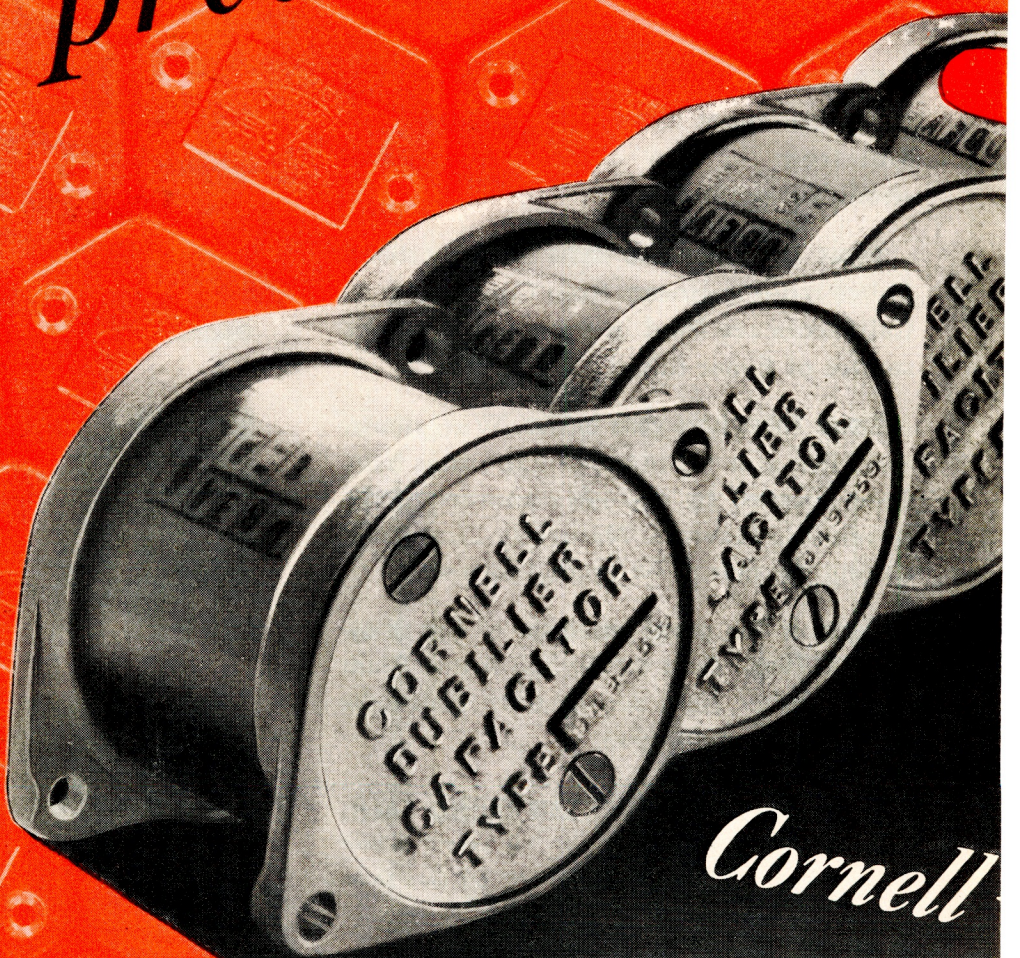

Cornell

capacitors

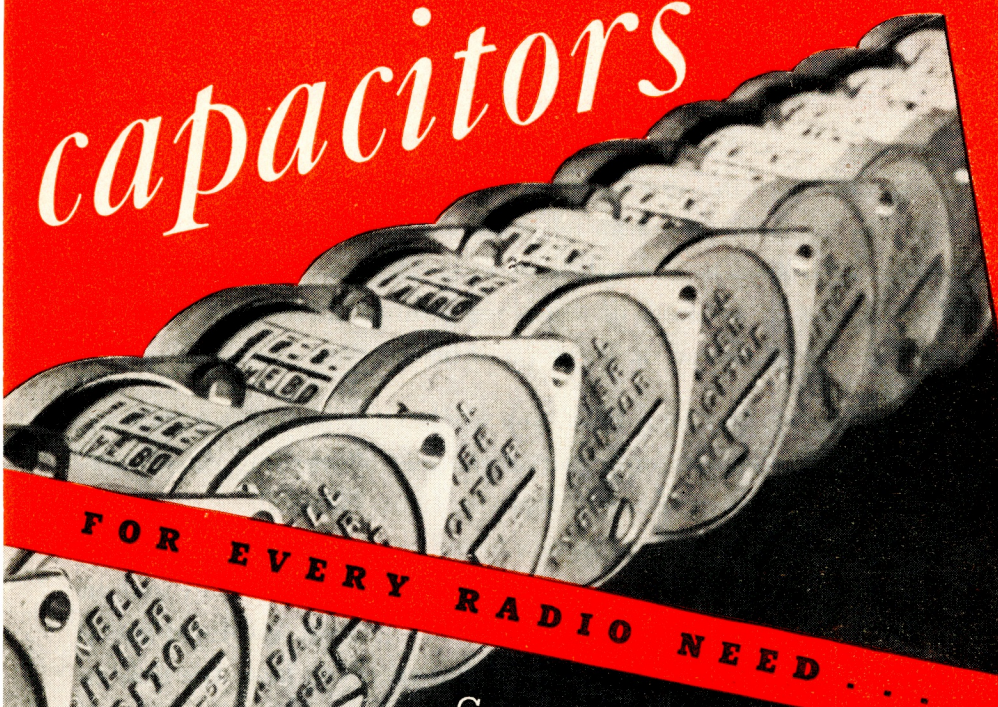

FOR EVERY RADIO NEED . . .

Capacitor failure is a common trouble . . . but not a necessary one. C-D Capacitors have the inherent stamina that keeps radios operating at their best. Their quality results from precision manufacture backed by the knowledge and experience gained over thirty-three years by Cornell-Dubilier engineers and craftsmen. C-D Capacitors, today, are proving their superiority in wartime communications all over the world.

Send for descriptive bulletins.

Cornell Dubilier Electric Corporation
South Plainfield, New Jersey

C-D CAPACITORS . . . *Engineered for Dependability*

Dubilier
capacitors

MICA • DYKANOL • PAPER
WET & DRY ELECTROLYTICS

RADIO-TELEGRAPH APPARATUS

for LEARNING TO COPY— PRACTICING— CLASS INSTRUCTION— CODE • • • —

YOUR first objective in your radio career as a hobby or as a profession will be to learn the radio-telegraph code. In order to obtain the amateur and commercial licenses you will have to be able to pass a satisfactory code speed. The speed or the number of words per minute in code that you will have to copy will of course depend on the type of license that you apply for.

START off on the right foot. First, you will have to learn the code characters — but the only correct method of learning these characters is to hear them — not to memorize them by sight. Naturally if you have to learn them by sound you will have to have a friend send these code characters to you. He will have to do this manually with the aid of a telegraph key and an audio oscillator. Also . . . you had better choose a very patient and loyal friend — one that will be with you at all times — especially when you have the time to spare or are in the mood to copy code.

WILL you want to depend on someone else to struggle through weeks of infrequent practice sessions when you probably are in an awful rush to get your license?

BE up to modern developments. We have your "friend" here in our stockroom. He is better known as an Automatic Keyer or Code Machine. Being all electrically controlled and electronically keyed makes things easy for him. He will send to you at all hours of the day and night. The sending will be nice and *clear-cut — easy to listen to — easier even to learn on.*

EASY methods make learning quicker. The Automatic Keyer simply plugs into your electric socket. Place a roll of tape on the keyer, turn on the control switches — then set the code speed just where you want it. Then you will pick out the letters, then words — and you've got your start.

AYERS AUTOMATIC

711 BOYLSTON STREET

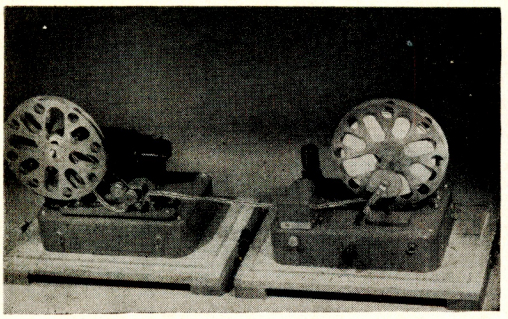

This is a short view of the machine completely set up and ready to go . . .

If you are going to learn the code or want to "brush-up" on your code this equipment will be the answer to your requirements.

The keying unit transcribes code characters that are inked on the paper tape that passes through an "electric eye." The keying unit is at the right side of the picture. The tape pulling unit will pull the tape through the keying unit at any speed that you desire.

TAPES

The tapes of course, carry the text of the material that will be sent to you through the keyer. Every character on the tape will be sounded out to you clearly and accurately. We believe that we have the largest selection of tapes available in the World. All types — over three hundred varieties. There are special tapes for beginners, a special set for slightly advanced students — and very intricate and high speed types for commercial practice and old-time operators that wish to engage in some high speed code practice.

SPECIAL TAPES MADE IN QUANTITIES FOR COMMERCIAL AND GOVERNMENT RADIO SCHOOLS

The Automatic Keyer is known commercially as the G-813-742, the G-813-A and is manufactured exclusively by the McElroy Mfg. Corp. This type unit is also known as the Army TG-10. The tape is the standard 3/8" recorder slip inked with dots and dashes. We make many varieties of this tape with the texts as specified by the many Schools devoted to training our men in the Armed Forces. Special tapes will be made upon request for any Government Service.

FOR GOVERNMENT AND COMMERCIAL USERS . . .

Prices of keying equipment and tapes will be quoted immediately upon request. Deliveries can be made very promptly.

FOR INDIVIDUAL USE . . .

If you want to learn the code quickly, easily and with a minimum of time, effort and expense, you can **RENT** an entire keying unit complete with tapes and earphones, ready to go to work for you. Drop a card for rental prices and further information.

CODE MACHINES CO., INC.

BOSTON 15, MASS., U. S. A.

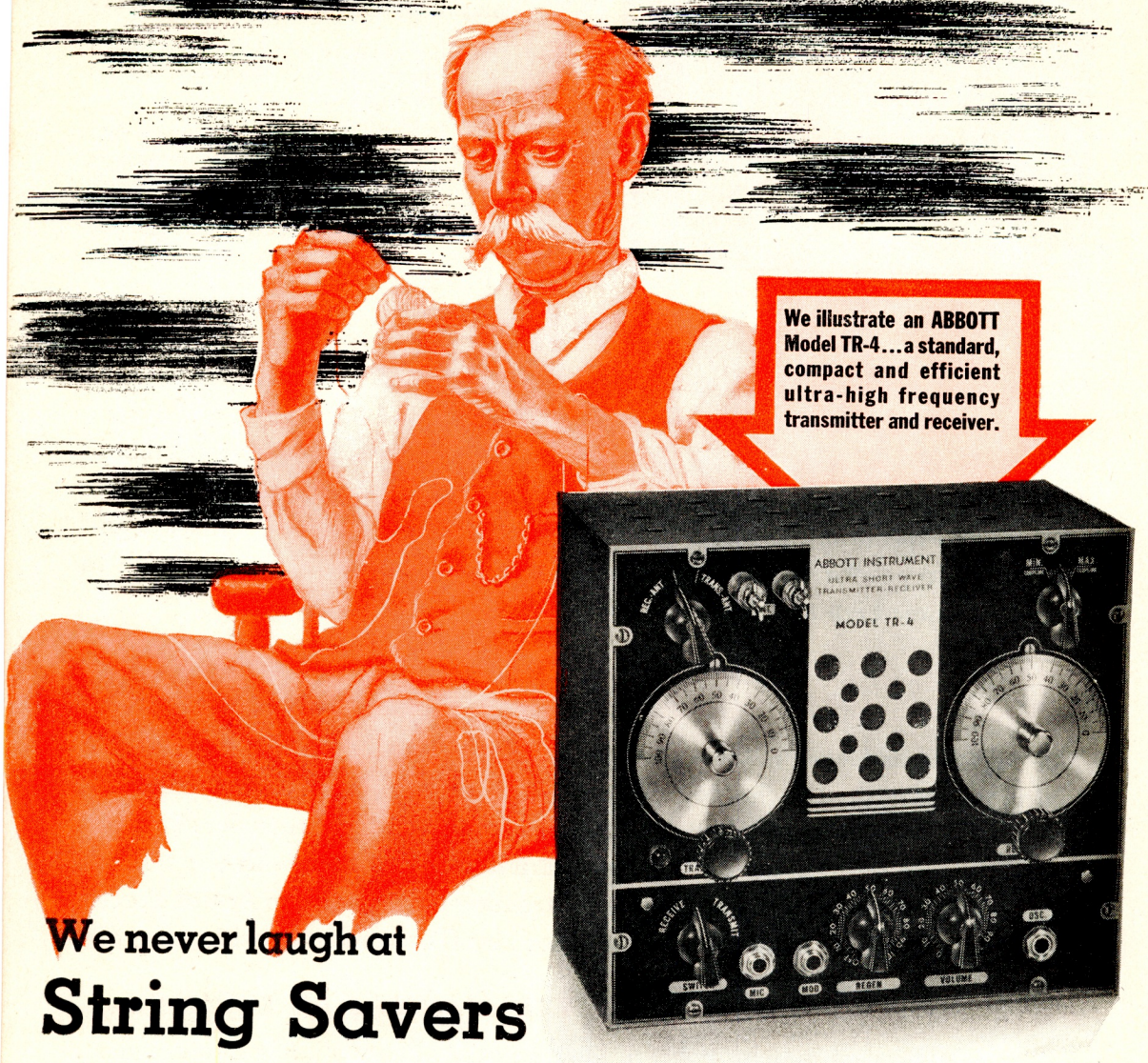

We never laugh at String Savers

The man who saves string knows what he is doing . . . some day those treasured pieces may come in handy. So, rather than laugh, we encourage, for we, ourselves, know something about the value of putting away for a rainy day.

For example, the nuggets of knowledge stored up in yesterday's manufacture of ultra-high frequency transmitters and receivers have a definite bearing on the war work we are doing. And the ideas we're "banking" today will be mirrored in ABBOTT equipment of tomorrow.

104

ABBOTT INSTRUMENT, INC.

8 West 18th St., New York 3, N. Y.

Distributors of Radio and Electronic Equipment

We are and have been engaged 100%, since the outbreak of hostilities, in supplying the urgent requirements of the

ARMY · NAVY · AIR FORCE
LABORATORIES · SCHOOLS
INDUSTRY

in order to bring victory that much sooner. We hope that soon we will be able to head the list with our tried and true friend — the amateur.

Send for free Catalog



The RADIO SHACK
167 WASHINGTON ST.,
BOSTON, MASS., U.S.A.

In war as in peace . . . . . .

A DEPENDABLE NAME

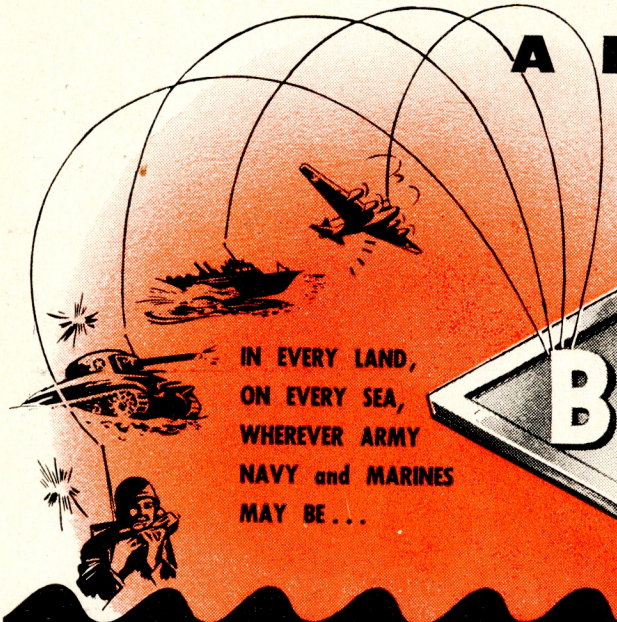

IN EVERY LAND,
ON EVERY SEA,
WHEREVER ARMY
NAVY and MARINES
MAY BE . . .

BRACH
EST. 1906

WORLD'S LARGEST and OLDEST MANUFACTURERS of

Antenna Systems

AND RADIO-ELECTRICAL PRODUCTS

- **Radio Direction-Finding Antenna Systems**
- **Radar Antenna Systems**
- **Junction Boxes**
- **Lightning Protective Devices**
- **Antenna Mounts and Other Radio-Electrical Accessories**

PRODUCTS FOR OTHER ESSENTIAL USES INCLUDE:

- **Potheads**
- **Gas Relays**
- **Arrester Housings**
- **Protective Panels**
- **Terminals & Housings**
- **High Tension Detectors**
- **Solderall & Flux**

Right now Uncle Sam's armed forces have first call. After Victory, our products will once again return to civilian service—improved by wartime experience and more dependable than ever.

L. S. BRACH MFG. CORP.

Antenna Designers & Manufacturers for Past 20 Years

Main Office & Factory: 55-65 Dickerson St., Newark, N. J.

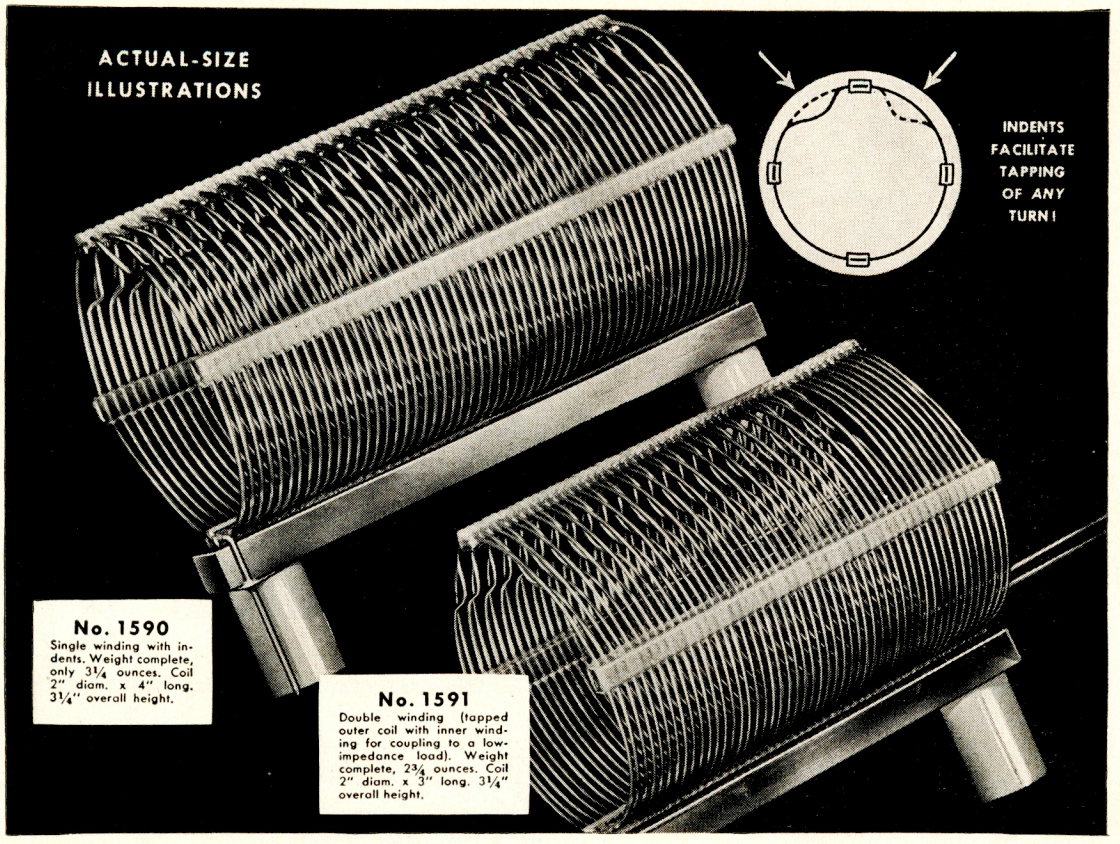

MADE "SPECIAL"—MADE FAST—*and* MADE RIGHT!

These two Air-Wound units, designed for ship-to-shore radio telephone transmitters, are typical of B & W small coils now being produced to meet exacting specifications by modern production methods *at the rate of 1200 a day!*

Many outstanding advantages accrue to these coils as a result of the famous B & W Air-Wound construction: Exceptionally light weight; mechanical ruggedness (they are not likely to be put out of commission by dropping or rough handling); adaptability to design or engineering changes in laboratory or field use; and the ease with which *ANY* of the closely-wound turns may be tapped, thanks to the special indent feature.

B & W Air Inductors of this general type are available for all normal frequency ranges. Literature on request.

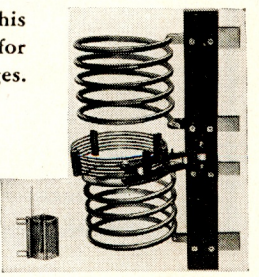

BIG COILS, TOO! →

Here you see the small No. 1591 Air Inductor shown in comparison to a B & W high-power unit for 10 KW. service. Details on any type gladly sent.

B&W

AIR INDUCTORS

Air-Wound and Ceramic and Phenolic Form Types

BARKER & WILLIAMSON, 235 Fairfield Ave., Upper Darby, Pa.

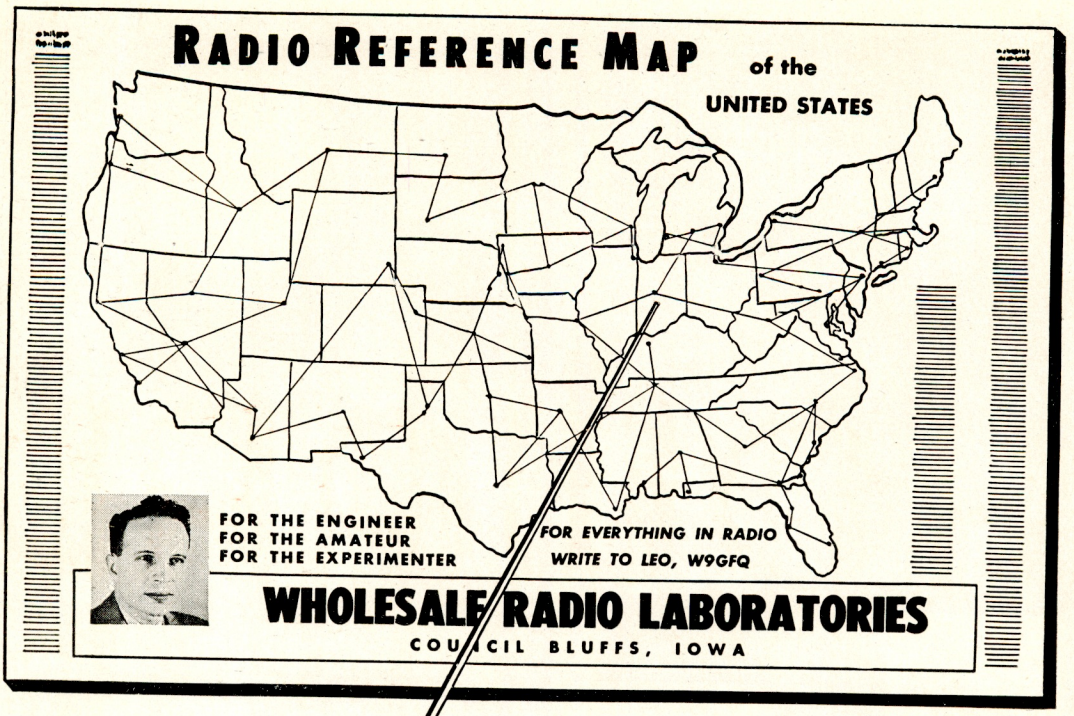



Get this Giant Wall-Size Radio Reference Map FREE from LEO

Here's the map that'll come in handy time and again. Leo, W9GFQ wants to send it to you absolutely free,—just to get acquainted.

Just right for your control room wall. Measures 4½ by 3½ feet, printed in three colors. Contains systems of four major networks, time zones, amateur zones, world's leading shortwave stations, all standard broadcast stations, monitoring stations, capitals, etc. Send 15 cents to cover packing and mailing. Get yours today. Write Leo, W9GFQ.

PARTS — SETS — REPAIR

My stock of parts is the most complete you'll ever find. Thousands of parts to build your own outfits or replace break-downs. Also quick, skillful repair service by our trained experts. Let us help you get your equipment in first-class shape. Don't forget, I pay highest prices for test equipment, communication receivers, transmitters and associated equipment. Also best trade-ins. Write today for big free catalog, full of everything needed by the amateur, serviceman and engineer. Write to Leo, W9GFQ.

Wholesale RADIO LABORATORIES
COUNCIL BLUFFS, IOWA

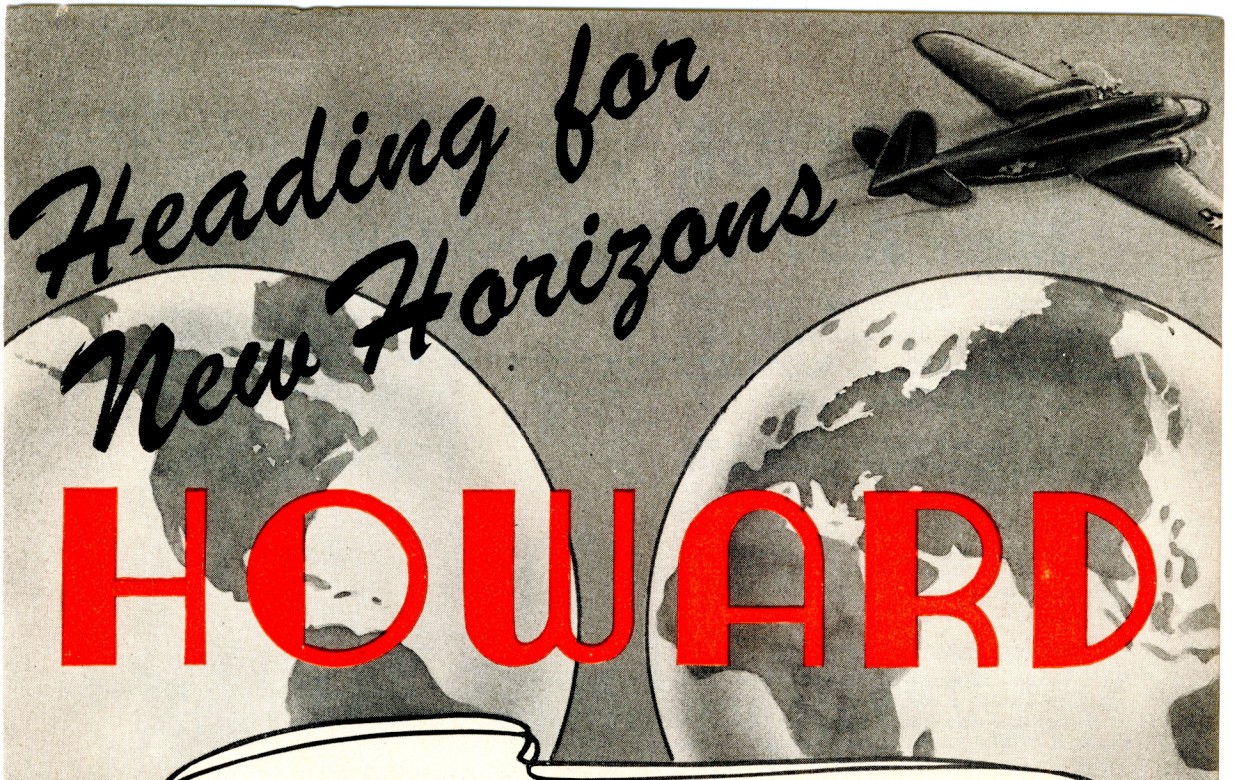

HOWARD

Improved Communication Receivers Will Come from the Tests of War!

America's communications take the lead in every action of this war. Through new and skillful engineering applications, laboratory performance standards are being carried right into the battle areas themselves.

Howard, as "America's Oldest Radio Manufacturer", is daily adding to its storehouse of knowledge and experience through its large production of precision-built military communications equipment. When Howard again turns to civilian manufacturing you can depend on getting the finest and most up to date radio equipment.

HOWARD RADIO COMPANY

1731-35 Belmont Ave., Chicago, Ill., Cable Address: HOWARDCO, U.S.A.

109

America's Oldest Radio Manufacturer

Learn CODE . . .

the EASY Instructograph *WAY*

Beginners, Amateurs and Experts alike recommend the **INSTRUCTOGRAPH,** *to learn code and increase speed*

Learning Code the easy Instructograph way gives you a decided advantage when qualifying for Amateur, Commercial, Civil or Military examinations. It is the quick, dependable way to increase your words per minute to the standard of an expert, enabling you to perform at your best when taking examinations from government machines.

ACQUIRING THE CODE

Well known is the fact that practice, and practice alone, constitutes ninety percent of the entire effort necessary to "Acquire the Code." The Instructograph supplies this "ninety percent" — taking the place of an expert operator in teaching the student. It can be adjusted to send slowly at first, then gradually faster and faster, until one is able to copy fast sending without conscious effort.

DIRECTING THE PRACTICE

Besides the practice afforded by the Instructograph, every student should have well directed practice instruction. This is supplied by the complete book of instructions that comes with every Instructograph Machine. This informative book provides the remaining "ten percent" necessary to obtain Code mastery. In simple, easy to understand language it guides the student, step by step, to best advantage, explaining the few important "short cuts" known to experienced operators. The Instructograph, the tapes that come with it and the book of instructions, gives you everything necessary to "Acquire the Code" as well as to increase and maintain speed.

CONVENIENT RENTAL PLANS

The Instructograph is made in several models, any of which may be rented on very reasonable terms. As government restrictions allow, it may also be purchased outright for cash or on convenient monthly payments — allowance being made for part of the rental paid. A large variety of tapes is always available to Instructograph users — elementary words, plain language, advanced messages and coded groups. Available too, is an "Airways" series of tapes for those interested in Aviation.



SPEED RANGE: 3 to 40 W.P.M.

The Instructograph

ACCOMPLISHES THESE PURPOSES:

FIRST: *It teaches you to receive telegraph symbols, words and messages.*

SECOND: *It teaches you to send perfectly.*

THIRD: *It increases your speed of sending and receiving after you have learned the code.*

With the Instructograph it is never necessary to impose on friends for practice. It is always ready and at your immediate service. And too, you are free from interfering Q.R.M. often experienced in listening through your radio receiver. The Instructograph is just as valuable to the advanced operator for increasing and maintaining his speed as to the beginner wishing to obtain his operating credentials.

Postal Card WILL BRING FULL PARTICULARS IMMEDIATELY ▪ WRITE TODAY!

THE INSTRUCTOGRAPH CO.

4707 SHERIDAN ROAD **CHICAGO, ILLINOIS**

Watch THIS NAME

HENRY

DISTRIBUTORS
MANUFACTURERS
ENGINEERS

For over a decade you've recognized it as the most popular name in distribution of communications equipment, serving Hams with a personalized service. You've seen it grow — probably you have contributed to its growth — to make it the world's largest dealer in Ham radio gear.

That was before Pearl Harbor!

Now Henrys are making crystals for your Army — for your Navy — doing their important part to bring home your relatives, your friends — the Amateur Radio Operators who are today's fighting radio men.

When the Hams go on the air again, Henry Radio will be in full stride, ready to serve you — to help you with any problem — to offer you the same co-operative service as always.

THANKS !!!
Our thanks, and the appreciation of the armed forces go out to the many customers who have lent or sold their receivers to us, to be distributed to the fighting fronts, where they can do a really important job. If you have a receiver you are not using, lend it or sell it to one of the services. They need them . . .

HENRY *Manufacturing Company*

2213 WESTWOOD BOULEVARD, LOS ANGELES (25) CALIFORNIA
MANUFACTURERS • ENGINEERS • PIEZO ELECTRIC QUARTZ CRYSTALS

ESICO

REG. U. S. PAT. OFF.

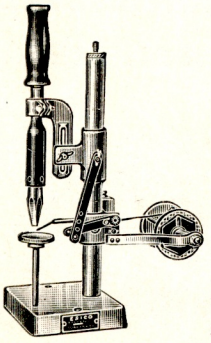

SOLDERING IRONS

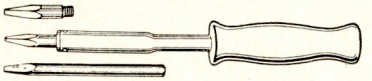

are widely used in industrial plants throughout the country. They are designed to withstand the strain of continuous service required of factory tools.

SPOT SOLDERING MACHINE

designed for treadle operation for advancement of iron and solder leaving operator's hands free for handling of product.

SOLDERING IRON TEMPERATURE CONTROLS

prevent overheating of soldering irons between soldering operations. Irons do not deteriorate when being used. The idle period causes oxidation and shortens life.

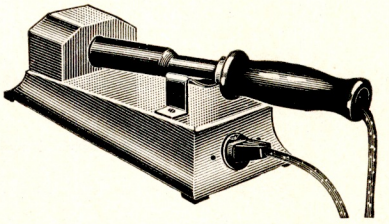

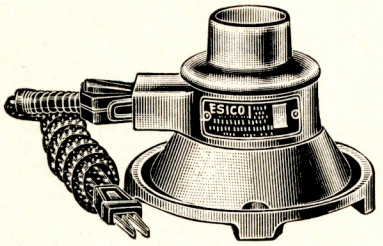

SOLDER POTS

ruggedly constructed pots of various sizes designed for continuous operation and so constructed that they are easily and quickly serviced, should elements have to be replaced.

Write for Catalog

ELECTRIC SOLDERING IRON CO., INC.

2544 West Elm Street

DEEP RIVER, CONNECTICUT

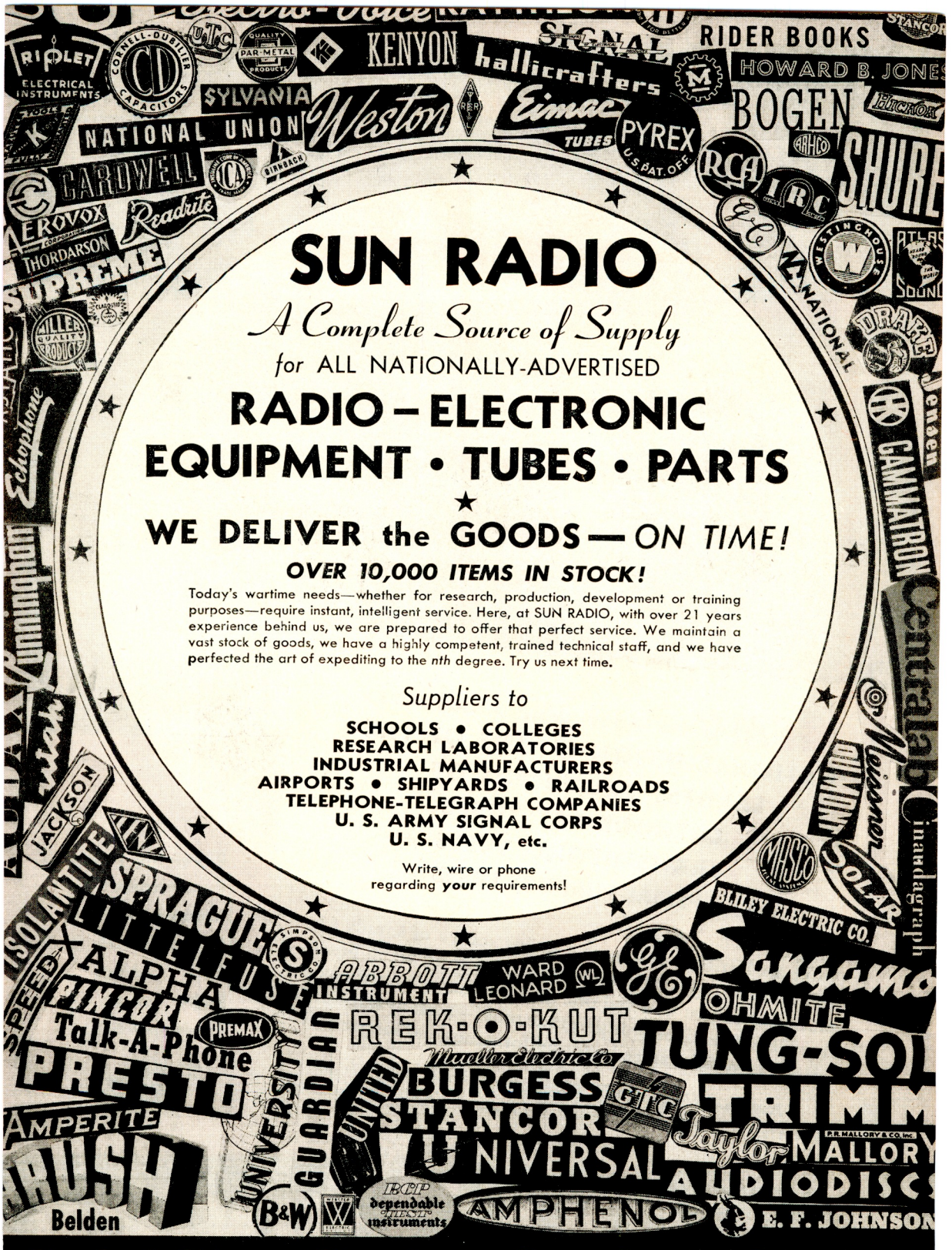

SUN RADIO

A Complete Source of Supply

for ALL NATIONALLY-ADVERTISED

RADIO – ELECTRONIC EQUIPMENT • TUBES • PARTS

★

WE DELIVER the GOODS — ON TIME!

OVER 10,000 ITEMS IN STOCK!

Today's wartime needs—whether for research, production, development or training purposes—require instant, intelligent service. Here, at SUN RADIO, with over 21 years experience behind us, we are prepared to offer that perfect service. We maintain a vast stock of goods, we have a highly competent, trained technical staff, and we have perfected the art of expediting to the *nth* degree. Try us next time.

Suppliers to

SCHOOLS • COLLEGES
RESEARCH LABORATORIES
INDUSTRIAL MANUFACTURERS
AIRPORTS • SHIPYARDS • RAILROADS
TELEPHONE-TELEGRAPH COMPANIES
U. S. ARMY SIGNAL CORPS
U. S. NAVY, etc.

Write, wire or phone
regarding ***your*** requirements!

New York's Oldest and Most Complete Radio-Electronic Supply House

SUN RADIO CO.

212 FULTON STREET
NEW YORK 7, N. Y.
Tel. BArclay 7-1840

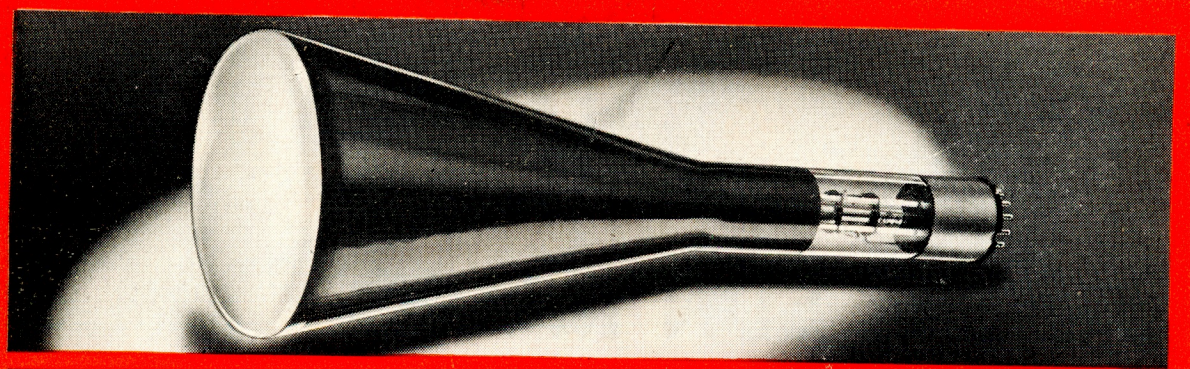



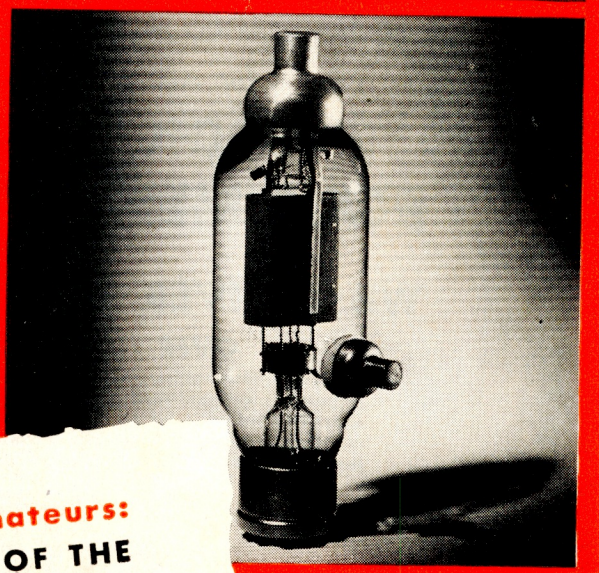

MEMO to Post-War Amateurs:

NATIONAL UNION IS ONE OF THE LARGEST PRODUCERS OF

- ★ **CATHODE-RAY TUBES**
- ★ **TRANSMITTING TUBES**
- ★ **SPECIAL PURPOSE TUBES**

Count on National Union as a major source of supply for the advanced types of tubes you'll be wanting when peace returns. Here you will find one of this industry's most complete Post-War lines of high grade tubes—built to war-time tolerances which assure better performance and longer life.

National Union Radio Corporation, Newark, N. J.
Factories: Newark, Maplewood, N. J.; Lansdale, Robesonia, Pa.

NATIONAL UNION PRODUCTS ALSO INCLUDE:

- **Receiving Tubes**
- **Condensers**
- **Volume Controls**
- **Photo-Electric Cells**
- **Exciter Lamps**
- **Panel Lamps**
- **Flashlight Bulbs**

ARMY E NAVY

NATIONAL UNION

RADIO AND ELECTRONIC TUBES

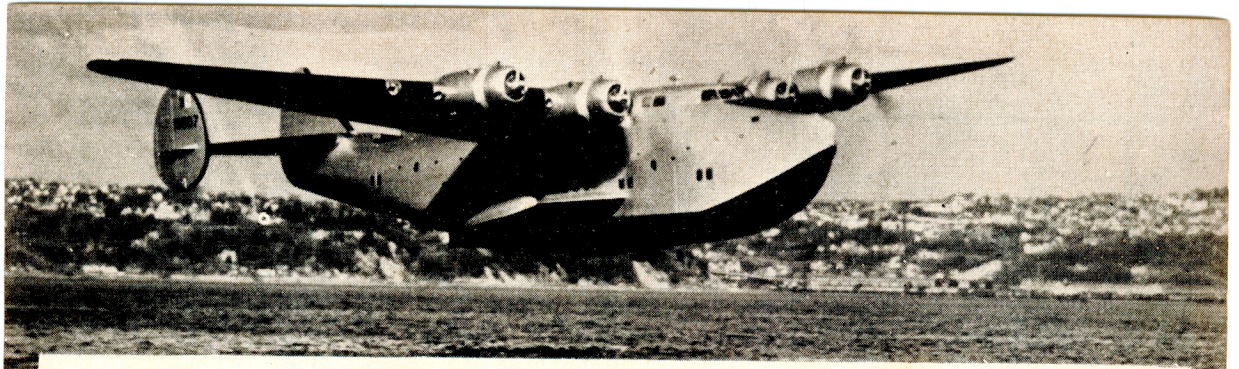

PREMAX ANTENNAS

Are Serving the Allies on Land and Sea

YOU CANNOT SECURE Premax Tubular Antennas today because our entire production is going into the service of the Allied Nations, maintaining communications in every land . . . on every sea.

Photographs used on this page are by courtesy of PAN AMERICAN WORLD AIRWAYS.

The skill and engineering ability of Premax Products has produced not one or two types of Tubular Metal Radiators, but scores of them . . . standard designs and special types. All are doing their job and doing it well.

When Victory comes, this wealth of knowledge and experience in Antenna design will again be at your service to supply you . . . as well as commercial users . . . with the finest, most efficient types of Antennas and Mountings available.

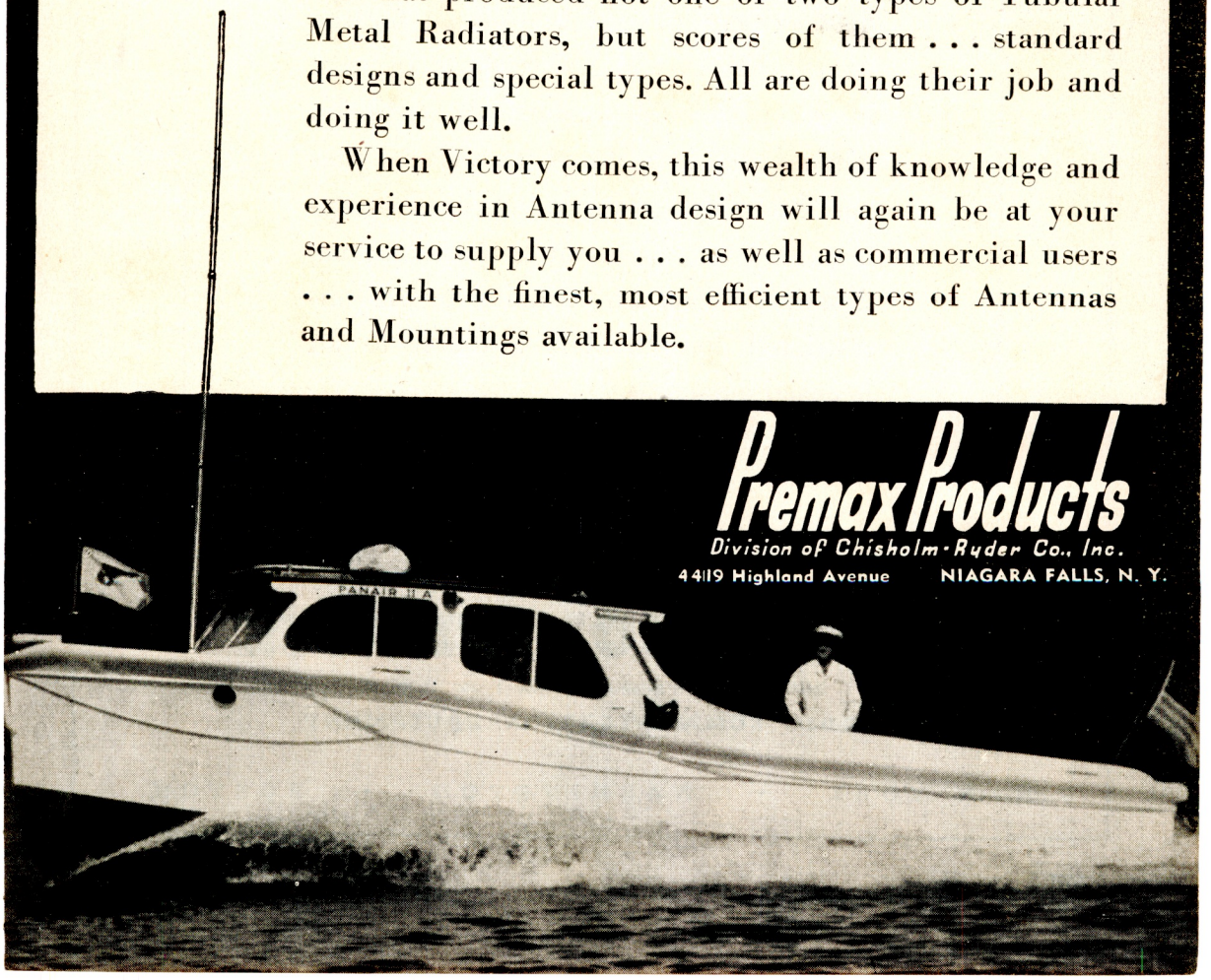

Premax Products

Division of Chisholm-Ryder Co., Inc.

44119 Highland Avenue NIAGARA FALLS, N. Y.

Announcement!

Despite our complete preoccupation with war production, we at Jefferson-Travis have not lost sight of the role two-way radio-communication equipment will play in the better days to come. Our highly specialized engineering staff is devoting all available time and skill to the development of new equipment for the Armed Forces which will prove of great interest to the radio amateur. Accordingly, when peace is restored we will be prepared to offer you vastly improved equipment for your enjoyment. In the meantime, descriptive literature relating to our unrestricted equipment is available to all licensed amateurs.

JEFFERSON-TRAVIS

245 East 23rd Street · New York 10, N. Y.

RADIO COMMUNICATION EQUIPMENT

NEW YORK · WASHINGTON · BOSTON



Men's lives depend on this perfection

...YOU CAN DEPEND ON IT, TOO!

Perfection is what counts in a crystal. And perfection comes only through painstaking work—plus constant research to develop better and yet better methods of production.

At Scientific Radio Products Company we're developing those better methods. New methods of etching, edging, mechanically tumbling crystals into frequency . . . all aimed at producing a better finished crystal at lower cost.

Our armed forces gets most of those perfect crystals. But we can handle your important needs, too . . . on special order. Write us if we can help.

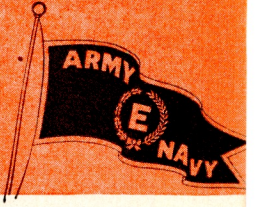

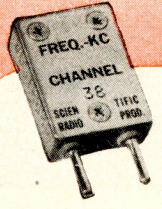

Scientific Radio Products Co.

LEO MEYERSON - W9GFQ — E. M. SHIDELER - W9IFI

738 W. BROADWAY, COUNCIL BLUFFS, IOWA

MANUFACTURERS OF PIEZO ELECTRIC CRYSTALS AND ASSOCIATED EQUIPMENT

HARRISON HAS IT!

Factory Distributors of

ABBOTT
ADVANCE
AEROVOX
ALADDIN
ALLIANCE
ALPHA
AMERICAN
AMPHENOL
AHRCO
ARRL
ATR
AMPEREX
AMPERITE
ASTATIC
ATLAS
B & W
BELDEN
BELL
BIRNBACH
BLILEY
BOGEN
BRUSH
BUD
BURGESS
CARDWELL
CENTRALAB
CINAUDAGRAPH
CONTINENTAL
CORNELL
CROWE
DRAKE
DUMONT
DUNCO
ECHOPHONE
EIMAC
ESICO
ELECTRONIC
ERIE
GAMMATRON
GC
GE
GENERAL
GUARDIAN
HALLICRAFTERS
HAMMARLUND
HICKOK
HOWARD
ICA
IRC
JACKSON

Since 1925, amateurs everywhere have been saying "Harrison has it!" whenever they wanted radio material—quickly and economically.

Today — Purchasing Agents, Engineers, and Expediters in War Plants, Laboratories, Government Agencies, Schools, etc. know that "Harrison has it!" when it comes to high priority Radio-Electronic parts and equipment.

You can concentrate and streamline your purchasing by depending upon Harrison—a single, dependable source for the products of over a hundred different manufacturers!

Our large and diversified stock, our technical sales assistance, and our eighteen years of procurement experience are at your service.

(Tomorrow — when Victory is won, we will be happy to again serve our friends, old and new, with the latest and best in equipment for peaceful purposes)

JANETTE
JENSEN
JOHNSON
JONES
KENYON
KRAEUTER
LECTROHM
LITTELFUSE
MEISSNER
MILLEN
MILLER
MUELLER
NATIONAL
OHMITE
PARMETAL
PIONEER
PRECISION
PREMAX
PRESTO
PYREX
RADIART
RCP
RME
RAYTHEON
RCA
SANGAMO
SHURE
SIGNAL
SIMPSON
SPEED-X
SPRAGUE
STANCOR
SUPREME
SYLVANIA
TAYLOR
THORDARSON
TRIMM
TRIPLETT
TURNER
UNITED
UTC
UNIVERSAL
UNIVERSITY
UTAH
VIBROPLEX
WARD LEONARD
WESTINGHOUSE
WESTON

800 PAGE

BUYER'S GUIDE

FREE to those directly connected with high priority purchasing. Kindly write on Company letterhead, giving your title.



Save Time!

Call WOrth 2-6276 First!

HARRISON RADIO CORPORATION

12 WEST BROADWAY • NEW YORK CITY 7

Telephone – WOrth 2-6276 • Cable – Harrisorad

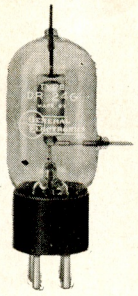

DR 24 G

Suitable for pulses of instantaneous high power at high frequencies. Also for ultra high frequency work.



DR 872 A

Medium power Rectifier. 10,000 volt inverse peak. Extensively used for power supplies from 1,000 to 5,000 volt output. Current output . . . 2 tubes . . . 2½ amperes.



DR 873

Similar to 872 A except that it's grid controlled. Can be used for the very smooth control of rectified DC voltage.



DR 1·7

Grid Control Rectifier similar in characteristics to 866.

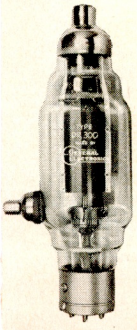

DR 300

A rugged tube for rugged service. Made by pioneers in the use of graphite anodes which protect against excess anode temperature. 300 watt capacity.



VACUUM CONDENSER

A permanent capacitance. Protected by vacuum from moisture, dirt, changing characteristics and mechanical injury. 50 mmf. 5,000 volt.



IONIZATION GAUGE

A very sensitive instrument for determining degree of vacuum in a system. Convenient, stable, trouble free. Indispensable for production of quality vacuum tubes.

Specialists in Engineering and Manufacturing

VACUUM PRODUCTS

FOR ELECTRONIC APPLICATIONS



EXPERIENCED heads, which among other things, pioneered the graphite anode and carburizing thoriated filament, have joined in this young and virile company to develop and manufacture the finest in vacuum products for electronic applications . . . with no prejudices, no preconceptions, no antiquated equipment or methods to hinder their creative and productive abilities. The products shown are modern in design and construction and represent use of the latest knowledge in the electronic field.

GENERAL ELECTRONICS INC.

101 HAZEL STREET, PATERSON, N. J.

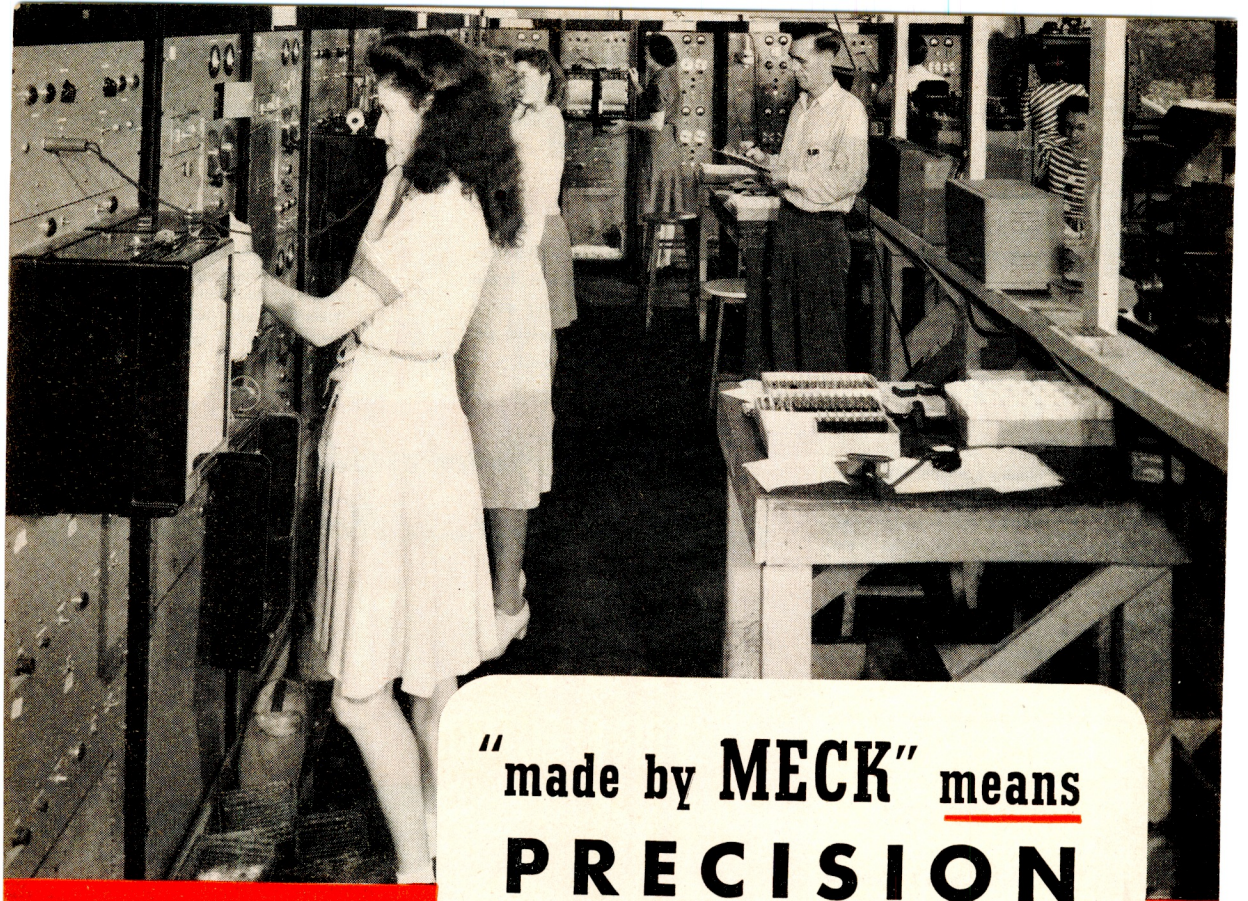

Here are made the final, conclusive tests on quartz crystals for our fighting forces. Equipment such as this guarantees precision in every phase of manufacture on every product from these world-famed engineers.

"made by MECK" means PRECISION

Preparing now for the era of development before us, John Meck Industries are among the leaders in constructive planning. John Meck products are now — and always will be — characterized by high quality and rigid precision.

From these laboratories will come improved instruments and equipment in the field of electronics — for industry and home.

CRYSTAL DIVISION
"Crystals quickly by 'phone". Service for volume users — for small orders — for special developments.

AUDIOGRAPH DIVISION
"Audiograph — The First Name in Sound". For excellence in voice and music recreating instruments.

MIRROR-TONE DIVISION
Recreating phonographs of high quality for home entertainment.

WEBER DIVISION
Quality testing instruments covering the electronics field.

JOHN MECK INDUSTRIES

PLYMOUTH, INDIANA

EXCELLENCE IN MUSIC AND VOICE RECREATING INSTRUMENTS

ONE OF A SERIES OF ADVERTISEMENTS SHOWING DeJUR PRECISION PRODUCTS IN ACTION ON THE HOME FRONT

LITTLE KNOWN APPLICATIONS

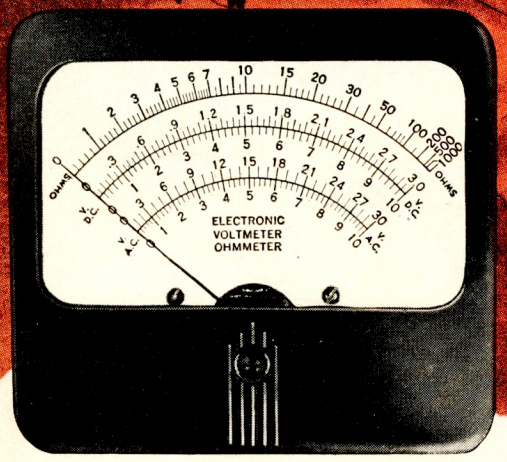

Because of the secrecy encircling war production, little can be told of a meter's importance to almost every phase of the work. Suffice it to say that over a wide range of industrial electronic applications . . . heat treating, counting, refining, sound detection, color selection, and many others about which not a word has been spoken or written . . . electrical measuring instruments are universally used.

It is of interest to know . . . for present and future reference . . . that DeJur precision meters are built into the equipment employed by many war plants. Wherever used, these meters enjoy confidence from the standpoint of sensitivity, durability and dependability. Peace will usher in even more new uses for meters. To insure absolute satisfaction, specify DeJur.

Send your blood out to fight... donate a pint to the Red Cross today

NAVY

Awarded for Excellence in Production and Quality of Material

DeJUR-AMSCO CORPORATION 121

SHELTON, CONNECTICUT

NEW YORK PLANT:
99 Hudson Street, New York City

CANADIAN SALES OFFICE
560 King Street West, Toronto



WHEN
the Smoke has Cleared Away

● Visions of the future are somewhat obscured today by smoke that ascends from battlefields. Dissipation of these clouds of war is an obligation which rests, in part, upon all American industries supplying essential products. Astatic is proud of its place on the production line.

Diversion of Astatic facilities to wartime demands has necessitated limited production of Astatic Microphones, only certain models of which are still manufactured to fill orders with high priority ratings.

Eventually, however, when the clouds of war are rolled away, Astatic products, incorporating newest advanced ideas, will again be available through leading Radio Parts Jobbers, to the great host of radio fans to whom the name "Astatic" has always meant performance of the highest type.

ASTATIC

THE ASTATIC CORPORATION

YOUNGSTOWN, OHIO

Licensed Under Brush Development Co Patents

In Canada
Canadian Astatic Ltd
Toronto, Ontario.

Destination Known

Somewhat at the mercy of the elements, a paratrooper can't always select the exact spot for his landing. But he will approach his objective.

With new applications for electronic devices appearing rapidly, we can't be very specific about our peacetime program now. One thing is certain, however... *we know where we are going.* If past performances and present accomplishments are any indication, we can anticipate our postwar objectives and plan for them accordingly. Specialists in the electronic field for almost a quarter century, ours is a progressive organization, with perfectly coordinated labor-management relations. Ever on the alert for new ideas, we cannot help but compile an enviable record of advanced designs and applications, many of which appear to be suited for postwar civilian requirements. Today, 100% in vital war work, production schedules occasionally permit us to accept additional contracts of a similar nature. May we be of service to you?



ELECTRONIC CORP. OF AMERICA

45 WEST 18th STREET • NEW YORK 11, N.Y. • WATKINS 9-1870

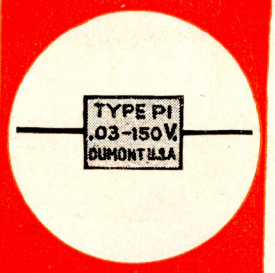

HAVE YOU A SPACE PROBLEM ?

★ *DUMONT offers the Smallest Paper Capacitor* for your space problem . . . Regardless of its wee size, it gives the most satisfactory results for the big job as well.

IT IS NON-INDUCTIVE SUITABLE FOR 95° Humidity operation.

Leads are sealed in Bakelite Resinold.

TYPES P1 and P2	TYPES P1N and P2N
Suitable for 95° Humidity	Suitable for 100° Humidity

CAPACITIES .0001 to .03 MFD

VOLTAGES from 150 to 600 Volts

DUMONT
ELECTRIC CO.

MFR'S OF
CAPACITORS FOR EVERY REQUIREMENT
34 HUBERT STREET NEW YORK, N. Y.

If you are a buyer of RADIO AND ELECTRONIC COMPONENTS



. . . here are the facts you should know!

This is Harvey's 18th year in the service . . .

buying and selling radio and electronic parts and equipment . . . representing and warehousing stock from America's leading manufacturers. Now, more than ever, we are in a strong position to help speed your production. We can supply the equipment you need in practically any quantity . . . if we haven't what you want in stock, we know where to get it for you quickly. Our experienced technical staff will gladly consult with you on any of your problems . . . and our trained expediters assure you the fastest possible delivery. Moreover, all of our merchandise is backed by an ironclad guarantee of satisfaction. ***It pays nowadays to see Harvey first.***

SOME OF THE MANUFACTURERS WHOSE PRODUCTS WE DISTRIBUTE

Abbott Instrument, Inc.
Airovox Corporation
American Phenolic Corp.
American Radio Hardware Co.
American Televn. & Radio Co.
Amperite Company
Amperex Electronic Products
Alliance Manufacturing Co.
Astatic Microphone Laboratory
Atlas Sound Corp.
Audak Company
Audio Devices Co.
Barker & Williamson
Belden Mfg. Co.
Birnbach Radio Co.
Bliley Electric Co.
Bogen Company, David
Brush Development Co.
Bud Radio Company
Cardwell Mfg. Co.
Centralab
Cornell-Dubilier
Corning Glass Works
Daven Attenuators
Dial Plates
Drake Electric Works
Dumont Laboratories, Inc., Allen B.
Eastern Mike-Stand Co.
Eby Co., Hugh H.
Eitel McCullough (Eimac)
Electronic Laboratories
Emco Radio Products
General Industries Co.
Gordon Specialties Co.
Hallicrafters, Inc.
Hammarlund Mfg. Co.
Hytron Corporation
Heintz-Kaufman (Gammatron)
Insuline Corp. (ICA)
International Resistance Co. (IRC)
Janette Mfg. Co.
Jensen Radio Mfg. Co.
Johnson Co., E. F.
Jones, Howard B.
Kenyon Transformer Co.
Kraeuter & Co., Inc.
Lenz Electric Mfg. Co.
Littelfuse Laboratories
McElroy, T. R.
Meissner Mfg. Co.
Millen Mfg. Co.
Miller Co., J. W.
Mueller Electric Co.
National Company
National Union Radio Corporation
Ohmite Mfg. Co.
Par-Metal Products Corp.
Philco
Pioneer Genemotor Corp.
Precision Apparatus Co.
Presto Recording Corp.
Radio Mfg. Engineers (RME)
Raytheon Production Corp.
RCA Manufacturing Co.
Sangamo Electric Co.
Shure Brothers
Signal Electric Mfg. Co.
Simpson Electric Mfg. Co.
Standard Electr. Products Co. (Staco)
Standard Transformer Corp. (Stancor)
Stromberg-Carlson
Struthers Dunn, Inc. (Dunco)
Supreme Instruments Corp.
Taylor Tubes, Inc.
Thordarson Electric Mfg. Co.
Trimm Headphones
Triplett Electr. Instr. Co.
Turner Company
United Transformer Co. (UTC)
University Laboratories
Utah Radio Products Co.
Ward-Leonard Electric Co.
Weston Electr. Instr. Co.
Worner Products Co.

125

HARVEY RADIO COMPANY

103 WEST 43rd STREET NEW YORK 18, N. Y.

Telephone Orders to BRyant 9-1946

Specify JAMES Crystals KNIGHTS

For Dependability Efficiency and Performance!

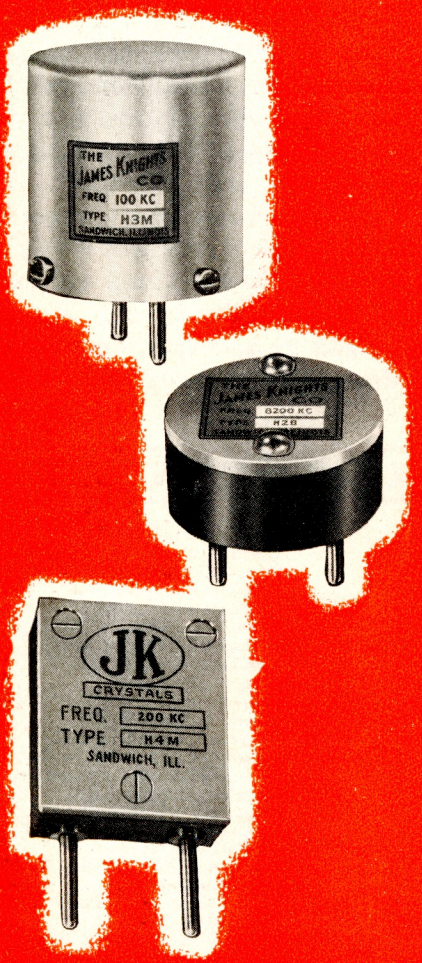

CRYSTALS EXCLUSIVELY!

The men of The James Knights Company are pioneers in the Radio Communications field — they have been designing and making Crystals since 1932. Today, all of the skill, experience and output of the James Knights staff is concentrated on Crystals exclusively — precision Crystals of all frequencies and all tolerances between 15 KC. and 10 MC.— Crystals for every conceivable purpose. And too, there will be J K Crystals for the Amateur when he is again back on the air.

If you have an important Crystal problem The James Knights Company can solve it for you. Why not send us your specifications today?

PRECISION CUTTERS OF QUARTZ
for
COMMUNICATIONS & OPTICAL USES

JK CRYSTALS

The JAMES KNIGHTS Co.

SANDWICH, ILLINOIS PHONE 65



SPECIFY *Tomorrow's* PERFECT INSULATING MATERIAL . . . *Today*

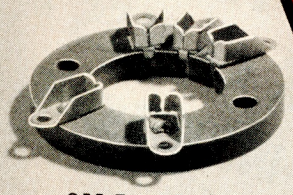

955 Type Socket

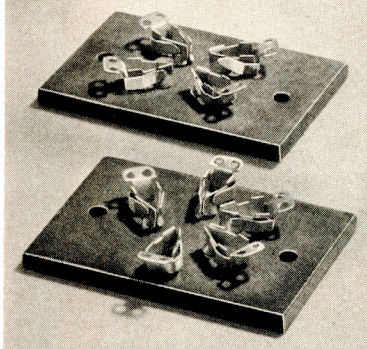

Standard 4 Prong and 5 Prong With CSK Rivets

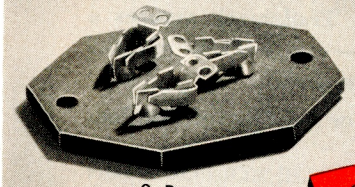

3 Prong Crystal Socket

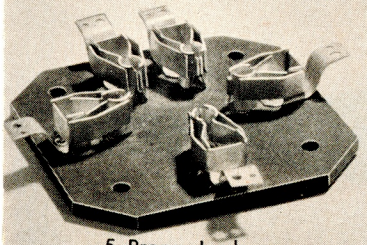

5 Prong Jumbo or 803 Socket

There is no insulating material more advanced than MYKROY . . . the perfect glass-bound mica product.

MYKROY will not pass or dissipate high frequencies, owing to its low loss characteristics. It is not organic, and will not carbonize under arc and create an electrical path.

MYKROY is non-porous . . . non-absorbent and non-adsorbent. It has exceptionally high surface resistivity and can withstand temperatures up to 1000 F. Mechanically it has strength comparable with cast iron . . . will not warp or change form. It can be machined to exceedingly close tolerances.

MYKROY is available in any quantities. Supplied in rods and sheets . . . or processed to your specifications in our plant. Let our engineers help solve your high frequency insulating problems with MYKROY.

MYKROY

Ask Your Dealer Or Write for book of complete engineering facts

ELECTRONIC MECHANICS INC.

70 Clifton Blvd., Clifton, N. J.
Chicago (47), 1917 No. Springfield Ave.
Tel. Albany 4310
Export Office 85 Broad St., N. Y. C.

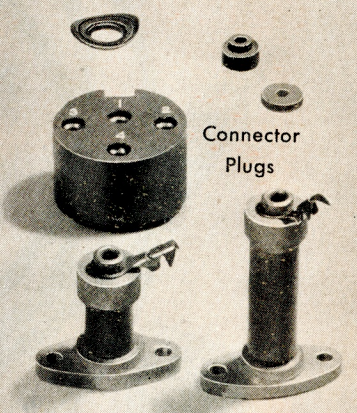

Stand-Off Insulators

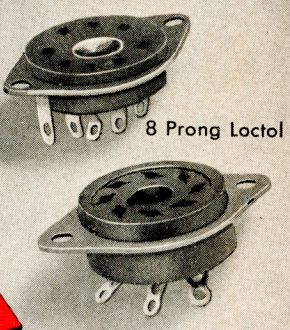

8 Prong Octal

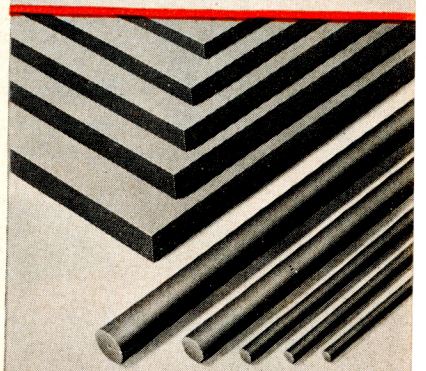

Rods and Strip Stock Available

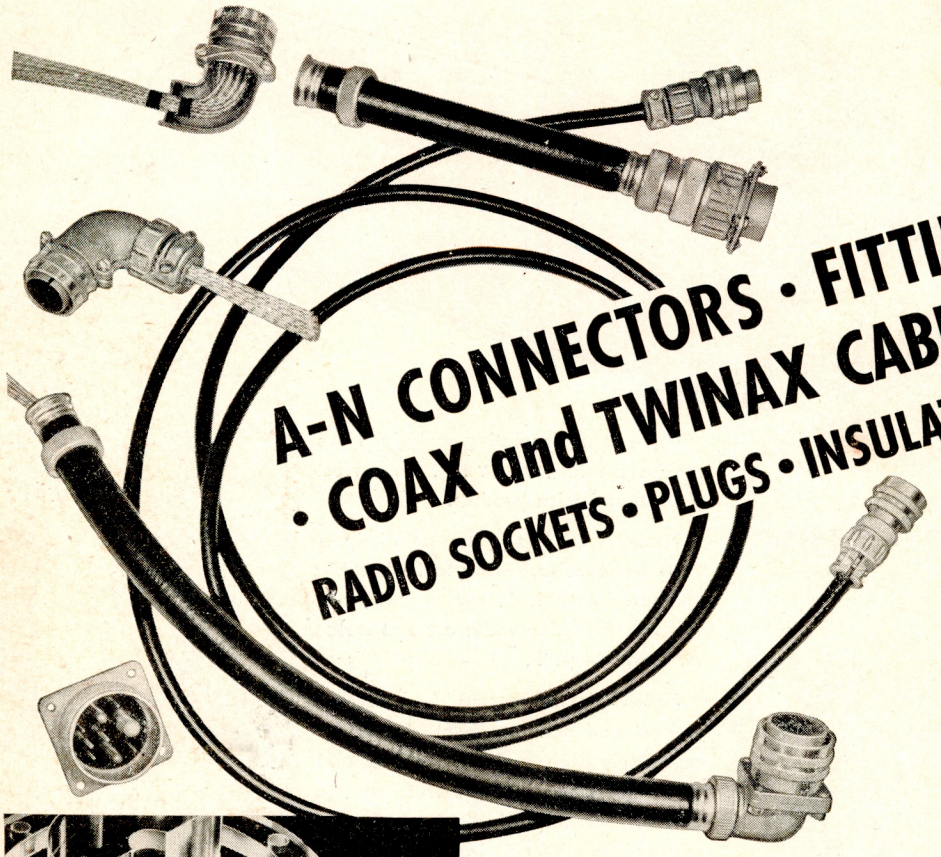

A-N CONNECTORS • FITTINGS • COAX and TWINAX CABLES • RADIO SOCKETS • PLUGS • INSULATIONS

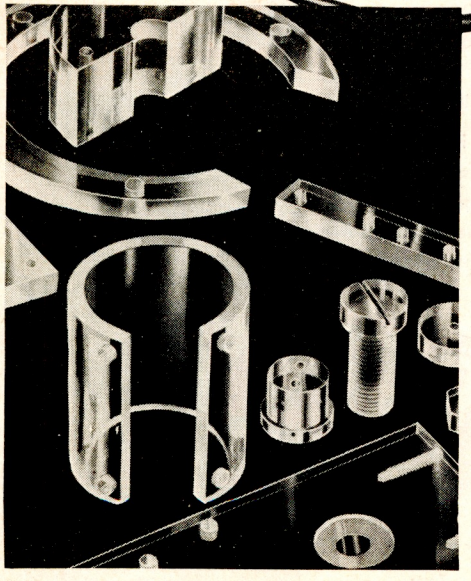

POLYSTYRENE coil forms • parts • sheet • rods • tapes for all electrical and radio requirements.

American Phenolic Corporation specializes in the design and construction of plastic parts and products for electrical and communications equipment of all types.

The Amphenol Trademark assures a quality product—engineered to give greatest satisfactory service.

Ask your dealer or write for information.

AMERICAN PHENOLIC CORPORATION
CHICAGO

IN CANADA—AMPHENOL LIMITED
TORONTO

AMPHENOL

A SNAP-ACTION Sensitive Relay for Use on Slowly-Varying Coil Currents

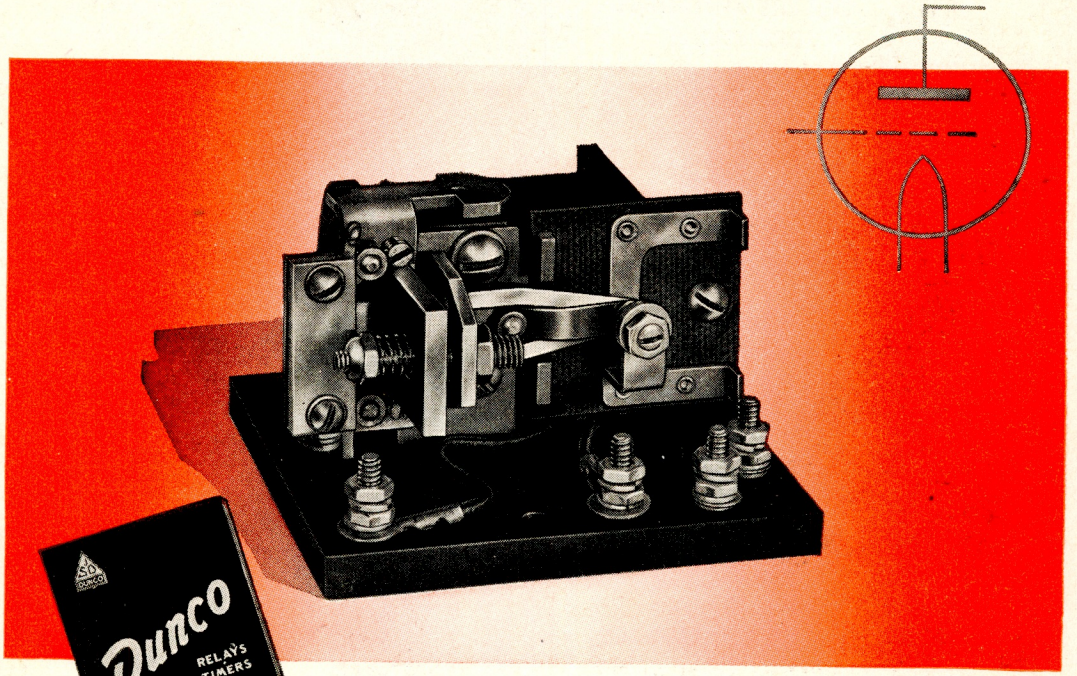

WRITE FOR CATALOG and RELAY-TIMER DATA BOOK

Other Struthers-Dunn Relay types described include: 30 ampere • Sensitive • Instrument-Controlled • Low-Voltage, Heavy-Current D. C. • Mechanical Latch-in, Electrical Reset ("Memory" Relays) • Mercury Contact • Telephone Auxiliary • Lamp Controlling • Polarized • Overload • Timing • Sequence, Ratchet Type • Motor-Reversing, etc.

This new Struthers-Dunn Relay is ideally suited for a wide variety of electronic circuit applications calling for snap-action contacts combined with a high degree of sensitivity. Contact pressure remains constant despite slow variations in the coil current. Then, when this current reaches a certain point, the contact operates with a positive snap action.

The relay operates on as little as 10 milliwatts in its coil circuit, and is recommended for dozens of highly sensitive vacuum tube applications, and in detecting overloads at low current levels. Its greatest field of use lies in applications where current varies between various limits, rather than from 0 to rated value.

Details gladly supplied to electronic equipment manufacturers. Ask regarding Relay 79XAX.

STRUTHERS-DUNN, INC.

1321 ARCH STREET PHILADELPHIA, PA

DISTRICT ENGINEERING OFFICES: ATLANTA • BALTIMORE • BOSTON • BUFFALO • CHICAGO • CINCINNATI • CLEVELAND • DALLAS • DENVER • DETROIT • HARTFORD INDIANAPOLIS • LOS ANGELES • MINNEAPOLIS • MONTREAL • NEW YORK • PITTSBURGH • ST. LOUIS • SAN FRANCISCO • SEATTLE • SYRACUSE • TORONTO • WASHINGTON

In Service on All Fronts

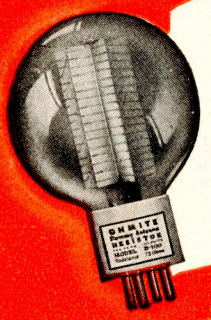

DUMMY ANTENNA RESISTORS

To check R. F. power, determine transmission line losses, check line to antenna impedance match. Helps tune up to peak efficiency. Non-inductive, non-capacitive, constant in resistance. 100 and 250 watt sizes in various resistances.

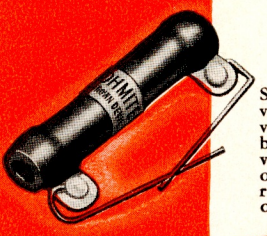

BROWN DEVIL RESISTORS

Small, extra sturdy, wire wound vitreous enameled resistors for voltage dropping, bias units, bleeders, etc. Proved right in vital installations the world over. 10 and 20 watt sizes in resistances up to 100,000 ohms.

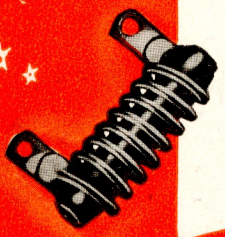

PARASITIC SUPPRESSOR

Small, light, compact non-inductive resistor and choke, designed to prevent u.h.f. parasitic oscillations which occur in the plate and grid leads of push-pull and parallel tube circuits. Only 1¾" long overall and ⅝" in diameter.

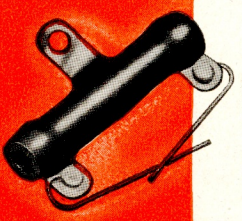

CENTER-TAPPED RESISTORS

For use across tube filaments to provide an electrical center for the grid and plate returns. Center tap accurate to plus or minus 1%. Wirewatt (1 watt) and Brown Devil (10 watt) units, in resistances from 10 to 200 ohms.



R. F. PLATE CHOKES

Single-layer wound on low power factor steatite cores, with moisture-proof coating. Built to carry 1000 M.A. 5 stock sizes from 2½ meters to 160 meters. 2½ and 5 meter chokes mount by wire leads. Larger sizes mount on brackets.

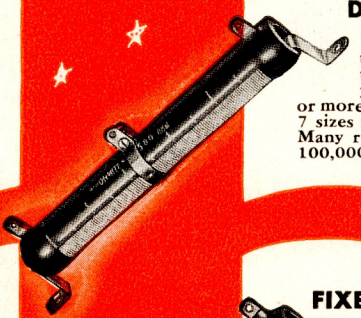

ADJUSTABLE DIVIDOHMS

You can quickly adjust these handy Dividohms to the exact resistance you want, or put on one or more taps wherever needed. 7 sizes from 10 to 200 watts. Many resistance values up to 100,000 ohms.



R. F. POWER LINE CHOKES

Keep R.F. currents from going out over the power line and causing interference with radio receivers. Also used at receivers to stop incoming R.F. interference. 3 stock sizes, rated at 5, 10 and 20 amperes.



FIXED RESISTORS

Resistance wire is wound over a porcelain core, permanently locked in place, insulated and protected by Ohmite vitreous enamel. Available in 25, 50, 100, 160 and 200 watt stock sizes, in resistances from 1 to 250,000 ohms.

Be Right with OHMITE

RHEOSTATS ★ RESISTORS ★ CHOKES ★ TAP SWITCHES

Ohmite Vitreous Enamel is unexcelled as a protective and bonding covering for resistors and rheostats.

OHMITE Rheostats ★ Resistors ★ Chokes ★ Switches



CLOSE-CONTROL RHEOSTATS

Insure permanently smooth, close control of electronic devices, communications and electrical equipment. Widely used in industry and in planes, tanks, ships. All ceramic, vitreous enameled. 25, 50, 75, 100, 150, 225, 300, 500, 750 and 1000 watt sizes. Approved Army & Navy types.

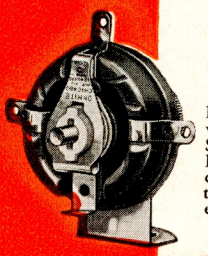

HIGH-VOLTAGE SWITCH

For general use where high voltage insulation is required. Suitable for circuits up to 1 K.W. rating. Used for band changing, meter switching, tapped transformer circuits, etc. Ceramic construction.

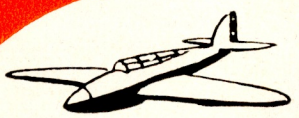

Many of you now engaged in vital war industries or in active service have long been familiar with the rugged dependability of Ohmite Products. Their wide use in planes, tanks and ships, in walkie-talkies and field units, in communications, electronic and electrical equipment, gives you added assurance in dealing with today's resistance-control problems. This is well worth remembering when you build original equipment or make vital replacements — *today and tomorrow.*

Besides the units shown here, there are Ohmite Non-Inductive Vitreous Enameled Resistors, Riteohm Precision Resistors, Hermetically-Glass-Sealed Resistors, Direction-Indicator Rheostats, Attenuators, and many others.

HANDY OHMITE OHM'S LAW CALCULATOR

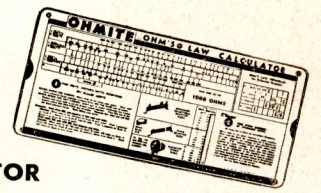

Very useful in training schools, in laboratories and in industry. Figures ohms, watts, volts, amperes — quickly, easily. Solves any Ohm's Law problem with one setting of the slide. All values are direct reading. No slide rule knowledge is necessary. Scales on two sides cover the range of currents, resistances, wattages and voltages commonly used in radio and electronic applications. Size only 4⅛" x 9". Send only 10¢ in coin to cover handling cost.

AUTHORIZED DISTRIBUTORS EVERYWHERE

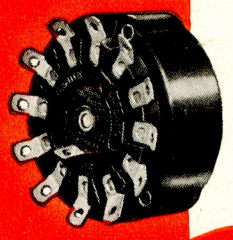

HIGH-CURRENT TAP SWITCHES

Compact, all ceramic, multi-point rotary selectors for A.C. use. Silver to silver contacts. Rated at 10, 15, 25, 50 and 100 amperes with any number of taps up to 11, 12, 12, 12, and 8 respectively. Single or tandem assemblies.

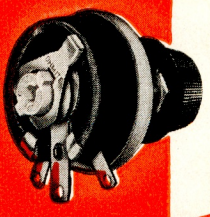

LC-2 LINK CONTROL

Simplified, compact, convenient panel regulation of the transfer of R.F. energy thru the link or low impedance line used in many transmitters. Eliminates swinging coupling coils. All ceramic vitreous enameled construction.



SEND FOR FREE CATALOG 18 — Gives helpful information and data on Ohmite stock units for essential applications — lists hundreds of stock values. Very handy for quick reference.

OHMITE MANUFACTURING COMPANY

4822 Flournoy Street, Chicago, U.S.A. Cable "Ohmiteco"

CRYSTALS

by

DX XTALS

'the heart of a good transmitter'

Complete automatic production plus electronic measuring and testing in temperature ranges from —30° to 130° F. make DX Xtals perfect, modern, tele-communication instruments. Ample production of these "battle-tested" types allow for civilian delivery of many cuts and frequencies — priorities, of course.

DX CRYSTAL CO.

GENERAL OFFICES: 1841 W. CARROLL AVE., CHICAGO, ILL., U.S.A.

DX XTALS

'the heart of a good transmitter'

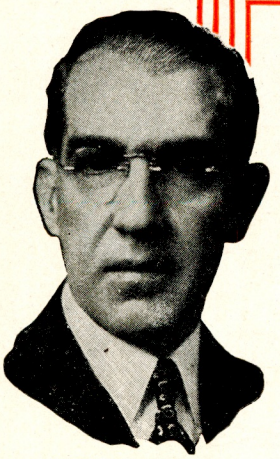

WALTER H. CANDLER

Originator of the famous Candler System and founder of the Candler System Company.

Radio Operators

ARE URGENTLY NEEDED IN PRACTICALLY EVERY BRANCH OF THE SERVICES . . . .

ARMY—NAVY—AIR CORPS—COAST GUARD—MERCHANT MARINE—AIRWAYS COMMERCIAL COMMUNICATIONS



T. R. McELROY

Official Champion Radio Operator, Speed 75.2 wpm., won at Asheville Code Tournament July 2, 1939, says: "My skill and speed are the result of the exclusive, scientific training Walter Candler gave me. Practice is necessary, but without proper training to develop Concentration, Co-ordination and a keen Perceptive Sense, practice is of little value. One likely will practice the wrong way."

SEND TODAY FOR THIS

FREE Book of Facts

It gives you the story of CANDLER CODE CHAMPIONS, and many inside tips that will help you. It is FREE. A post-card will bring it to you. No obligation.

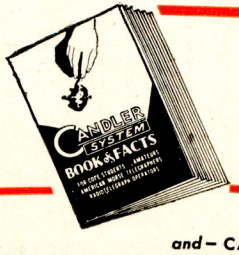

YOU can LEARN RADIO CODE and prepare for an interesting career or improve your present speed and proficiency with the CANDLER SYSTEM which trains you to meet all code speed requirements for these services, also Amateur and Commercial License.

YOU CAN LEARN CODE RIGHT, from the beginning, as you will be using it as an operator, with the CANDLER SYSTEM TRAINING in half the usual time.

YOU CAN SPEED UP YOUR CODE and obtain your LICENSE or qualify for HIGHER RATING and a GOOD JOB by taking CANDLER TRAINING in your home or present location.

The excellence of CANDLER SYSTEM TRAINING has accounted for the SUCCESS of many thousands of present day HIGH SPEED — HIGH RATED — HIGH PAID OPERATORS. It is surprisingly easy and inexpensive. Numerous Amateurs and Members of the A.R.R.L. and R.S.G.B. are CANDLER TRAINED.

It takes more than memorizing the code and merely sending and receiving to become a skilled radio operator. Ask any good operator. He will tell you CANDLER teaches you quickly, thoroughly, the technique of fast, accurate telegraphing, and trains you to meet all requirements.

LEARN WHEREVER YOU ARE to send and Receive Code at HIGH SPEED.

Let CANDLER give you SPEED — ACCURACY — TELEGRAPHING TECHNIQUE, and eliminate all worry and code problems.

★ **COURSES FOR BEGINNERS *and* OPERATORS**

THE SCIENTIFIC CODE COURSE *is a complete radio-code course for beginners. It teaches all the necessary fundamentals scientifically.*

THE HIGH SPEED TELEGRAPHING COURSE *is for operators who want to increase their w.p.m. and improve their proficiency.*

THE TELEGRAPH TOUCH TYPEWRITING COURSE *is specially prepared for those who want to become expert in the use of the typewriter for copying code.*

NO EXPENSIVE PRACTICE EQUIPMENT NEEDED

Learning Code or Improving Speed and Accuracy are Mental Processes that require Special Training, which vast experience in developing high-speed operators enables CANDLER to give you simply, thoroughly, interestingly. Practice without understanding these laws and fundamentals governing speed and skill is always hard, and wastes much valuable time. CANDLER shows you the EASY, BETTER WAY to SPEED, SKILL and CODE PROFICIENCY, quickly.

CANDLER SYSTEM

BOX 928 — DEPT. 10-A, DENVER 1, COLORADO

***and*— CANDLER SYSTEM COMPANY, 121 KINGSWAY, LONDON, W. C. 2, ENGLAND**



The Great Wall of China—2550 miles long—built about 3000 B.C.

Throughout every step of manufacture long life is built into Tobe Capacitors. And before manufacture begins, Tobe engineers have shown great ingenuity in pioneering new and advanced designs. The original capacitor (Tobe OM-601) with hold-down bracket is shown below. It has many outstanding advantages over certain other types and shapes of capacitors. This new capacitor is strong, compact and space-saving and the new hold-down bracket permits the use of either inverted or upright terminals, with wiring underneath or on top of chassis.

Write us about your capacitor problems. They will have the best efforts of Tobe engineers.

LONG LIFE ASSURED

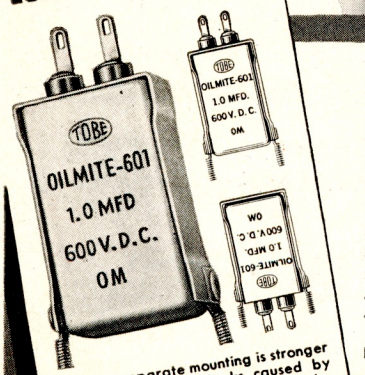

This new separate mounting is stronger and helps prevent leaks caused by breaks in can. This outstanding Tobe design takes the minimum of space.

SPECIFICATIONS
TOBE OM-601 CAPACITORS

TYPE	OM
RATINGS	.05 to 2.0 mfd. 600 V.D.C. .05 mfd. to 1.0 mfd. 1,000 V.D.C.
STANDARD CAPACITY TOLERANCE	. . . 10%
TEST VOLTAGE	. . . Twice D.C. rating
GROUND TEST	. . . 2,500 Volts, D.C.
OPERATING TEMPERATURE	55° F to 185° F
SHUNT RESISTANCE	.05 to 0.1 mfd. 20,000 megohms. .25 to 0.5 mfd. 12,000 megohms. 1.0 to 2.0 mfd. 12,000 megohms.
POWER FACTOR	At 1,000 cycles—.002 to .005
CONTAINER SIZE	Width ⅝", length 1 5/16", ht. 2¼"
MOUNTING HOLE CENTERS	1½"

TOBE DEUTSCHMANN CORP.
TOBE
CANTON · MASSACHUSETTS

A small part in victory today

A BIG PART IN INDUSTRY TOMORROW

ORDER FROM NEWARK
FOR QUICK SERVICE ON
RADIO PARTS

DON'T let slow deliveries of radio and electronic components delay production schedules in your plant. SEND US AN ORDER for **ALL** the things you need right now . . . and we will ship **AT ONCE** every possible item we have in stock, advising probable delivery date on the balance. We supply transformers, filters, wire, resistors, rheostats, rectifiers, panels, sockets, tubes and thousands of other parts DIRECT FROM STOCK to America's war industries, schools, laboratories, etc.

ATTENTION! INDUSTRIALS, SCHOOLS, COLLEGES

OIL FILLED . . . OIL IMPREGNATED

FILTER CONDENSERS

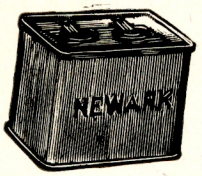

Our regular Filter Condensers, made by a famous manufacturer, and fully guaranteed at rated voltages. Thousands have been sold. Ideal for your own equipment, for laboratory and experimental purposes.

→ NO PRIORITY REQUIRED

Only L 265

Mfd.	Volts DC.	Size	Price
1	1000	5 x 3⅜ x 1½	$ .59
2	2000	4⅞ x 3⅛ x 1¾	1.50
4	3000	5 x 3⅛ x 3⅞	3.75

NEW IMPROVED TYPE

Oil Filled—Oil Impregnated

FILTER CONDENSERS

Our finest quality condensers. Complete with porcelain insulators and mounting brackets. Gray enamel finished metal case, size 1¾" x 3¾" x 4½" high. Not illustrated.

9 mfd. 2000 v. DC.

$3.25

NO PRIORITY REQUIRED

Only L 265

ORDER TODAY DIRECT FROM THIS ADVERTISEMENT

Sorry . . . No Catalogs for the Duration

When ordering supplies (except Filter Condensers) be sure to state priority, end use, precedence rating, and CMP allotment number.

NEWARK *Electric Company*

323 W. MADISON ST. CHICAGO, ILL.

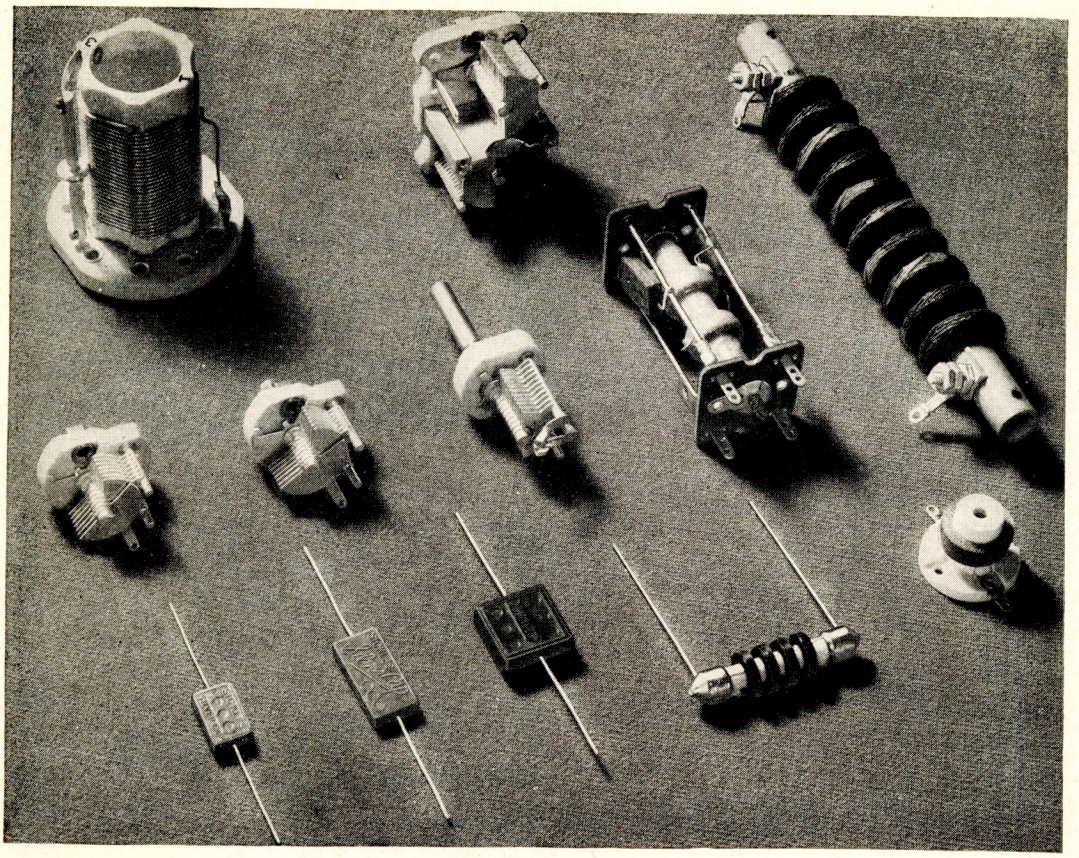

Jewelry? *In a way, yes . . .*

These are Sickles products — coils and condensers —
as precise and clean-cut as a Swiss watch, as handsome as Florentine silver,
and as scarce, for non-military purposes, as rubies . . . though our production is up
in several departments some 400% over that of pre-war days. They're jewels as performers, too . . .
as you might well judge by our recently-won Army-Navy "E."
Superior Sickles specialties of this same high quality will be available
for general use as soon as Victory is won. Meanwhile, please bear us in mind.
The F. W. Sickles Company, Chicopee, Massachusetts.

ARMY E NAVY

SICKLES *Radio and Electronic Specialties*

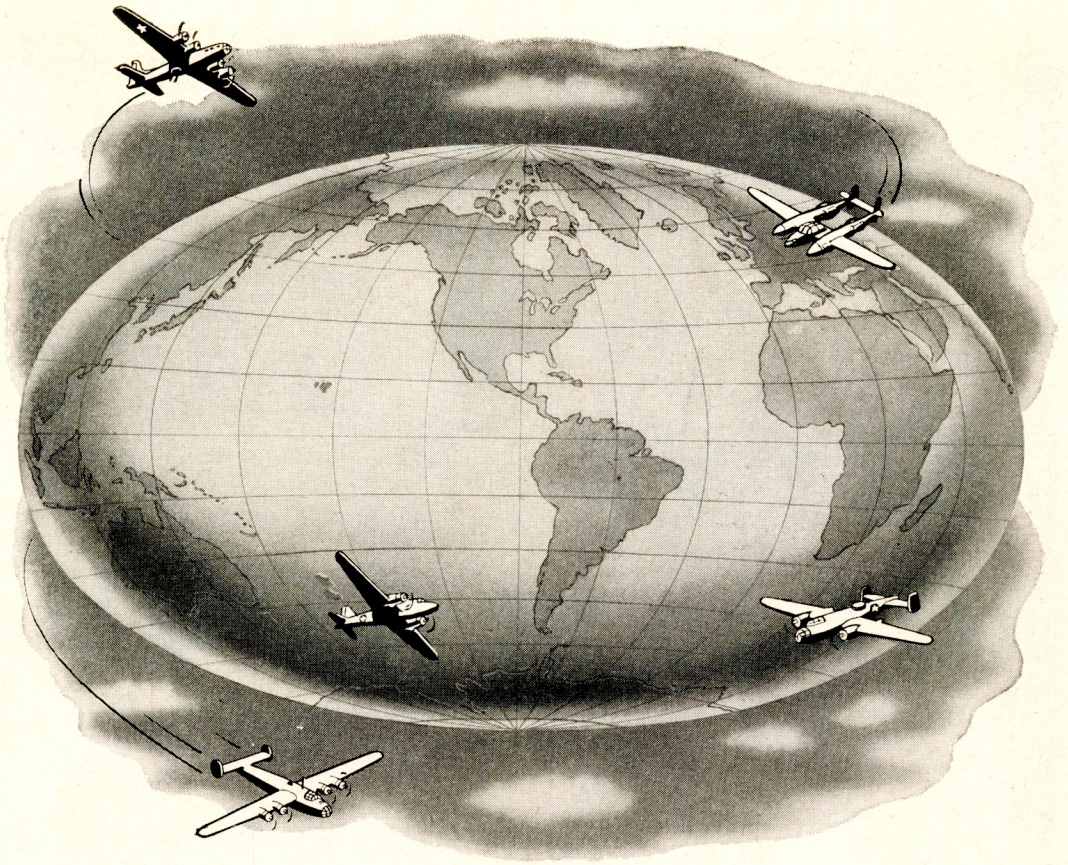

Serving the Air Routes of the World
. . . *TODAY and TOMORROW*

On established passenger and cargo airlines, as well as on military missions, dependable communications are vital. Wilcox Aircraft Radio, Communication Receivers, Transmitting and Airline Radio Equipment have served leading airlines for many years . . . and while, today, Wilcox facilities are geared to military needs, the requirements of the commercial airlines likewise are being handled. Look to Wilcox for leadership in dependable communications!

WILCOX ELECTRIC COMPANY

Manufacturers of Radio Equipment

14th & Chestnut Kansas City, Mo.

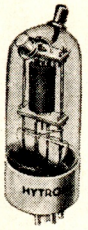

HY75

HY75 $3.95

	HY 75**
Filament potential	*6.3 volts
Filament current	2.6 amps.
Plate potential (max.)	450 volts
Plate current (max.)	80 ma.
Plate dissipation (max.)	15 watts
Nominal Class C output	20 watts

HY114B $2.25 HY615 $2.25

	HY114B**	HY615**
Filament potential	*1.4v.	6.3 v.
Filament current	0.155 a.	0.175 a.
Plate potential (max.)	180 v.	300 v.
Plate current (max.)	12 ma.	20 ma.
Plate dissipation (max.)	1.8 w.	3.5 w.
Nominal Class C output	1.4 w.	3.8 w.

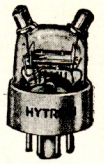

HY615

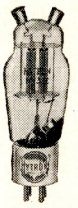

HY31Z

HY30Z $2.75 HY31Z $3.50

	HY30Z#	HY31Z#
Filament potential	*6.3 v.	*6.3 v.
Filament current	2.25 a.	2.5 a.
Plate potential (max.)	850 v.	500 v.
Plate current (max.)	90 ma.	150 ma.
Plate dissipation (max.)	30 w.	30 w.
Nominal Class C output	58 w.	56 w.
Nominal Class B audio output	110 w.	51 w.

THEY'VE GOT TO BE GOOD



Soldiers, sailors, marines, coast guardsmen, and airmen unite in a vast amphibious operation—the whole linked and coordinated by former radio amateurs and potential "hams" operating intricate radio and electronic equipment.

In that action, every Hytron tube is on its mettle. Failures are out! Each tube must meet the full shock of mechanized war, and still maintain the vital electronic nerve system which spells teamwork and victory.

Quality-conscious Hytron engineers have met the challenge. Close observance, throughout manufacture, of the tight tolerances of rigid Hytron electrical and mechanical specifications insures production of only the best.

The peacetime stamp of amateur approval has carried over into war. Ask the fighting men who use these dependable Hytron war tubes. For war equipment, WERS units, and that post-war deluxe station you are planning, Hytron tubes should be your choice too. They're good, because they've got to be good.

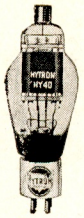

HY40

HY40 $3.75 HY40Z $3.75

	HY40#	HY40Z#
Filament potential	7.5 v.	7.5 v.
Filament current	2.25 a.	2.5 a.
Amp. factor	25	80
Plate dissipation (max.)	40 w.	40 w.
Plate	1000 max. v. & 125 max. ma.	
Nominal Class C output		94 w.
Nominal Class B output (2 tubes)		185 w.

HY51A HY51B HY51Z $4.75

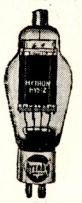

HY51Z

	HY51A,Z#	HY51B#
Filament potential	7.5 v.	10 v.
Filament current	3.5 a.	2.25 a.
Amp. factor	25–85	25
Plate dissipation (max.)	65 w.	65 w.
Plate	1000 max. v. & 175 max. ma.	
Nominal Class C output		131 w.
Nominal Class B output (2 tubes)		285 w.

HY24 $1.50 801A/801 $2.50



HY67

	HY24#	801A#
Filament potential	*2.0 v.	7.5 v.
Filament current	0.13 a.	1.25 a.
Plate potential (max.)	180 v.	600 v.
Plate current (max.)	20 ma.	70 ma.
Plate dissipation (max.)	2.0 w.	20 w.
Nominal Class C output	2.7 w.	25 w.

HY63 $2.50 HY67 $7.75

	HY63††	HY67††
Filament potential	*1.25 or 2.5 v.	*6.3 or 12.6 v.
Filament current	0.22 or 0.11 a.	4 or 2 a.
Plate potential (max.)	200 v.	1250 v.
Plate current (max.)	20 ma.	175 ma.
Plate dissipation (max.)	3 w.	65 w.
Nominal Class C output	3 w.	152 w.

HY65 $3.00 HY69 $3.95

	HY65††	HY69††
Filament potential	*6.0 v.	*6.0 v.
Filament current	0.85 a.	1.6 a.
Plate potential (max.)	450 v.	600 v.
Plate current (max.)	75 ma.	100 ma.
Plate dissipation (max.)	15 w.	27 w.
Nominal Class C output	20 w.	35 w.

HY60 $2.75 HY61/807 $2.25

	HY60††	HY61/807††
Filament potential	6.3 v.	6.3 v.
Filament current	0.5 a.	0.9 a.
Plate potential (max.)	425 v.	600 v.
Plate current (max.)	60 ma.	100 ma.
Plate dissipation (max.)	15 w.	25 w.
Nominal Class C output	16 w.	40 w.



HY65



HY69

HY866 Jr. $1.05
866A/866 $1.50

	HY866 Jr.##	866A/866##
Filament potential	2.5 v.	2.5 v.
Filament current	2.5 a.	5.0 a.
Peak inverse potential	5000 v.	10000 v.
Peak plate current	500 ma.	1000 ma.
Max. D.C. output pot.	1575 v.	3165 v.
Max. D.C. Cur. (2 tubes)	250 ma.	500 ma.

OTHER POPULAR HYTRON TUBES†

Type	Description	Price
2C25	15-watt medium-mu triode	$3.00
2C45	7.5-watt triode (modulator)	2.50
1OY	15-watt general-purpose triode*	1.50
837	12-watt r.f. pentode	2.80
841	15-watt high-mu triode*	2.25
864	Non-microphonic voltage-amp. triode	1.00
954	Sharp cut-off acorn pentode	4.50
955	Acorn triode	2.75
1616	Half-wave high-vacuum rectifier*	5.75
1625	25-watt r.f. tetrode (12-v. heater)	2.25
1626	5-watt triode oscillator	1.60
E1148	3.5-watt u-h-f triode	2.25
VR105-30	Gaseous voltage regulator (OC3)	1.00
VR150-30	Gaseous voltage regulator (OD3)	1.00

† This is not a complete list.
* Instant-heating filament.
# Triode
** U. H. F. Triode
†† Beam Tetrode
Rectifier



HYTRON RADIO TUBES

OLDEST EXCLUSIVE MANUFACTURER OF RADIO RECEIVING TUBES

HYTRON CORPORATION

ELECTRONIC AND RADIO TUBES

SALEM AND NEWBURYPORT, MASS.

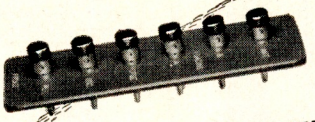

DOING A BIG JOB IN RADIONICS

Closely allied with many electronic developments during the past twenty years, it's been our assignment to provide numerous component parts to the leaders in the field. Some of these components are simple to manufacture, others are more intricate—in any event, each one is doing a big job in today's electronic applications.

Thousands of ARHCO parts roll out of our plant every day. Always built to superior standards, they've been improved to an even higher degree because of stringent wartime specifications. We welcome your inquiries.

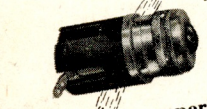

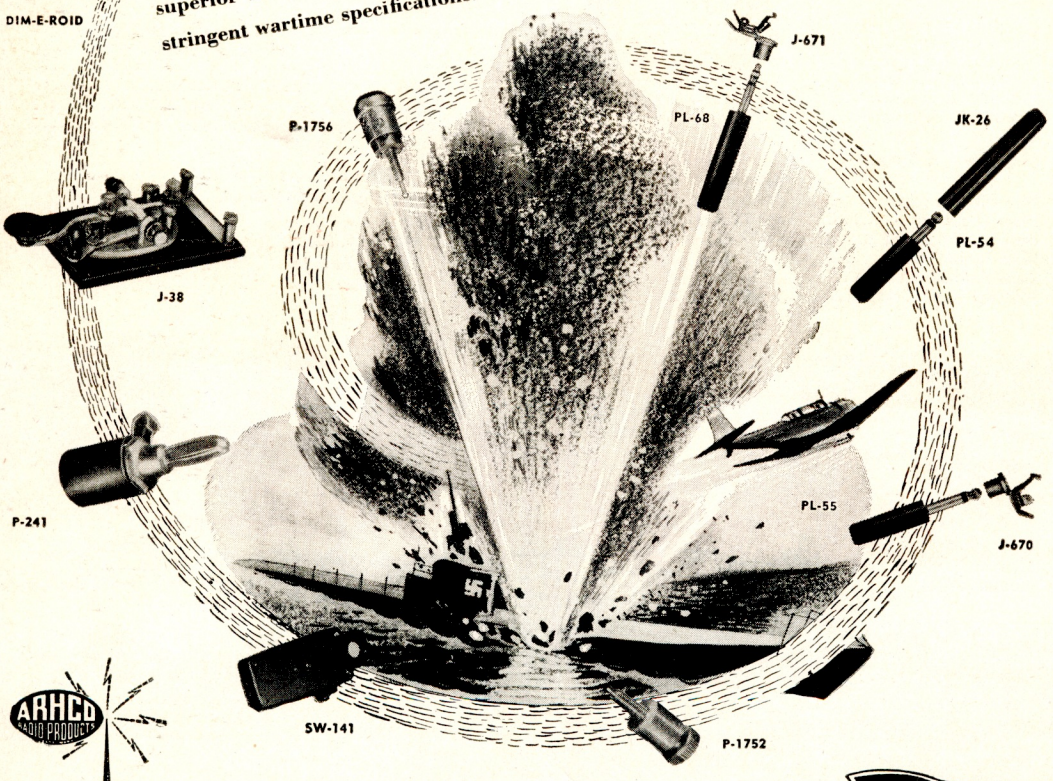

ARHCO RADIO PRODUCTS

Back the Attack—Buy More War Bonds

American Radio Hardware Co., Inc.

476 BROADWAY • NEW YORK 13, N. Y.

MANUFACTURERS OF SHORT WAVE • TELEVISION • RADIO • SOUND EQUIPMENT



Constant-impedance output attenuators for control of individual loud-speakers.

Let CLAROSTAT Solve your RESISTANCE PROBLEM

Greenohms — extra-rugged power resistors — 4 to 200 watts, fixed or adjustable.



Plug-in tube type resistors and ballasts.

Wire-wound rheostats and potentiometers in widest range of resistances, tapers, taps, etc.

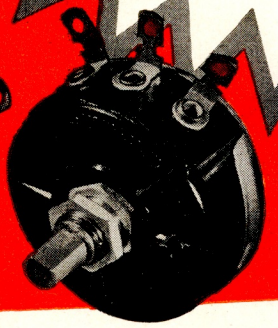

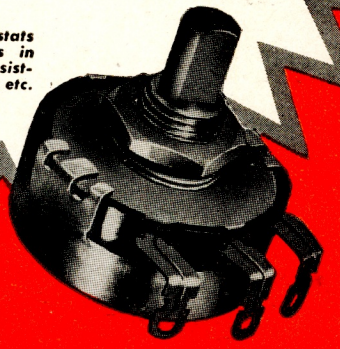

Above: Composition-element control. Below: Wire-wound power rheostat.

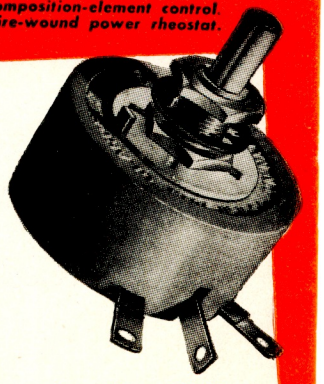

★ Another year rolls around—and the main problem remains the winning of the war—quickly, efficiently, economically. For that reason Clarostat continues to be pledged 100% to meet the needs of our fighting men. You can count on Clarostat, to the very limit, in your war effort. ★ And after the war, with the return to peacetime radio and electronic activities, Clarostat's greatly expanded facilities will serve you even better than ever before. ★ Meanwhile, bear in mind Clarostat for . . .

Resistors . . .

All types, both standard and special. Metal-clad strip resistors. Bakelite-molded strip resistors. Voltage dividers. Flexible resistors including Glasohms or glass-insulated power resistors and low-wattage heating elements. Greenohms—the tougher green-colored cement-coated power resistors found in quality assemblies.

Controls . . .

Composition element Clarostat controls with the stabilized element, establishing new standards for this type. 250 ohms to 5 megohms. Wire-wound rheostats and potentiometers. ½ to 100,000 ohms. Choice of tapers, taps, shafts, switches. Single or multiple units in tandem. Power rheostats in 25 and 50 watt sizes — the toughest things in their class. Also padders, faders, mixers and other controls. Also output attenuators, constant-impedance, for control of individual loud-speakers. The most intricate resistance devices designed and made to meet extraordinary requirements.

Resistance Devices . . .

Tube-type plug-in resistors for AC-DC sets, ballasts, line-voltage regulators, voltage-dropping power cords, etc.

Ask Our Jobber . . .

If your resistance or control requirements are conventional, ask your jobber for standard Clarostat units. Otherwise, write us direct.

CLAROSTAT *Controls and Resistors*

CLAROSTAT MFG. CO., Inc. - 285-7 N. 6th St., Brooklyn, N. Y.

THERMADOR'S 'THERMATITE TREATED'

Solves Heat  Cold 

Humidity  Problems in

Radio Transformers

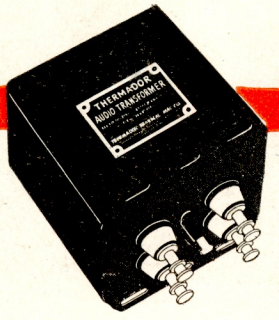

Thermador Transformers are Thermatite treated to withstand extreme temperatures and humidity—arid or moist heat—dry or damp cold do not hamper their efficiency. Thermatite is the name of a process of accurate heat controlled vacuum impregnation developed and improved over a period of ten years.

Thermador also manufactures built-in Electric Heaters, Electric Ranges, Electric Water Heaters

THERMADOR TRANSFORMERS



THERMADOR ELECTRICAL MFG. CO.

5119 South Riverside Drive • Los Angeles 22, California

"Seven Leagues Ahead"

CINAUDAGRAPH SPEAKERS
-where precision counts!

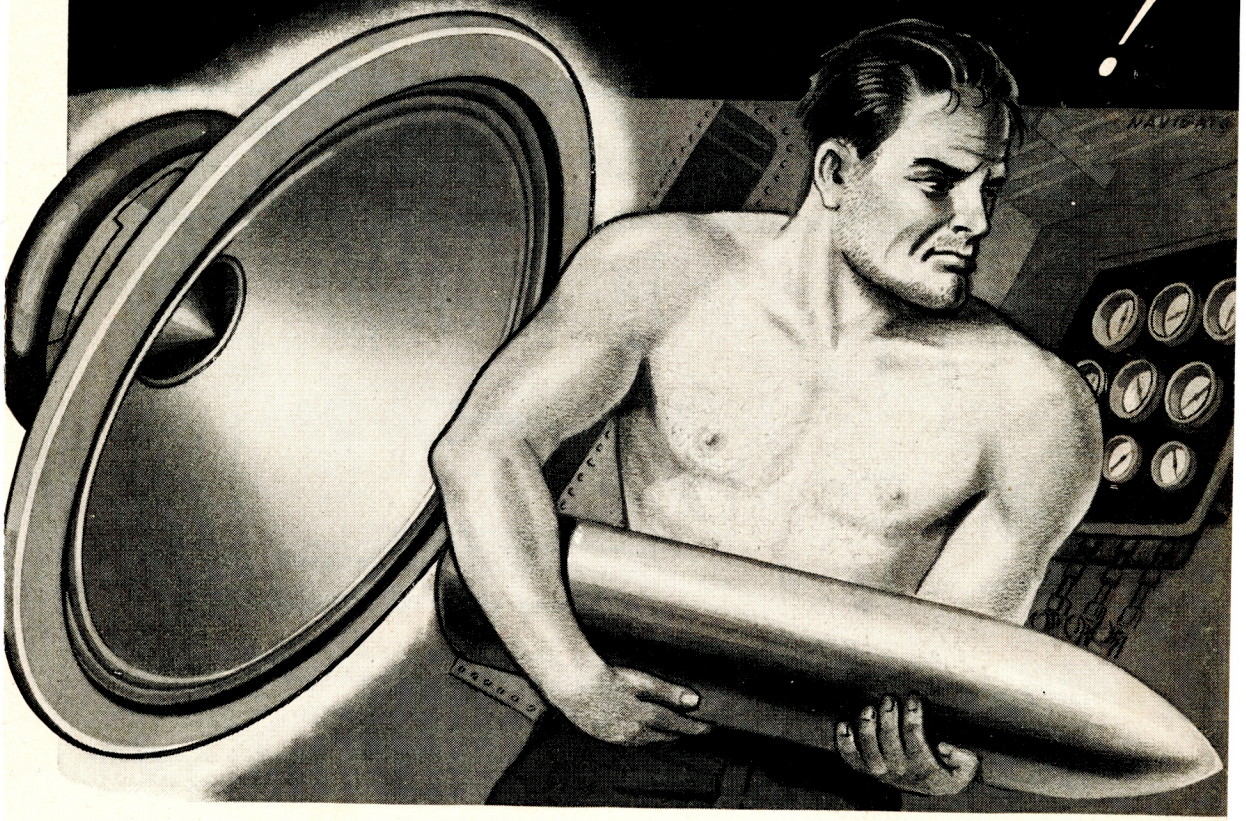

Constant research, experience, vigilant production and continuous testing are built into the precision construction of every Cinaudagraph Speaker. That's why you get top performance, stamina to spare and maximum fidelity from Cinaudagraph Speaker installations.

Take the "Mallard" — a typical Cinaudagraph Speaker achievement. This masterpiece of craftsmanship and engineering is impervious to moisture and rugged — recommended for most marine and out-of-door installations.

But no matter what size or type of Cinaudagraph Speaker you choose — for War or Peace — you can be sure that only the finest materials and highest inspection standards go into each unit. Add up all of these factors and they tell you why Cinaudagraph Speakers are internationally famous for doing a better job.

Watch Cinaudagraph Speakers after Victory!

Send for free catalog, mentioning your regular dealer's name.

CINAUDAGRAPH SPEAKERS

Cinaudagraph Speakers, Inc.

3911 S. Michigan Ave., Chicago

"No Finer Speaker Made in all the World"

Audels RADIO -MANS GUIDE

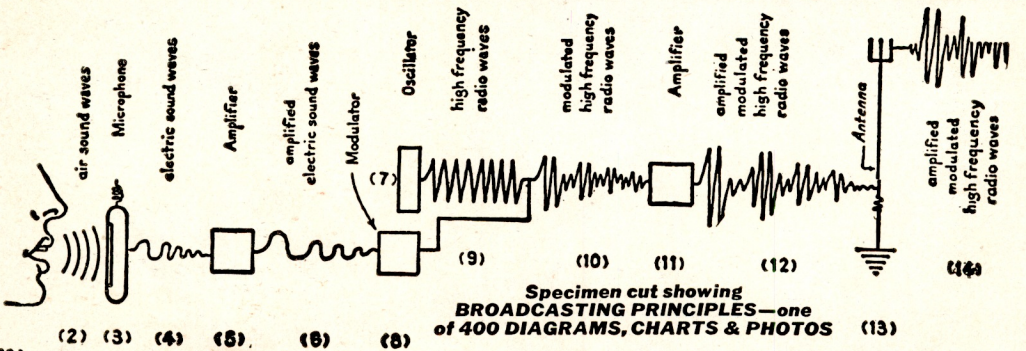

Specimen cut showing BROADCASTING PRINCIPLES—one of 400 DIAGRAMS, CHARTS & PHOTOS

QUESTIONS AND ANSWERS

1001 FACTS



THE KEY TO PRACTICAL RADIO INFORMATION

Including Frequency Modulation—Television, etc.

Inside Information for Aviation, Marine, Commercial Operators and Technicians, Servicemen and Students

772 PAGES, 400 DIAGRAMS, CHARTS & PHOTOS

This well organized reading course in Radio is especially suitable for home study and as a ready reference guide to help you learn the inside facts about radio. The amount of mathematics required for a successful study of this book is fully covered as the various chapters include numerous practical radio problems, carefully worked out, step by step, to their final solution. The contents are PROGRESSIVELY ARRANGED AND CAREFULLY INDEXED.

LATE DATA—EASY TO READ AND UNDERSTAND

Gives Authentic Principles and Practices in Construction, Operation, Service & Repairs. Covers clearly and concisely Radio fundamentals—Ohm's Law—Physics of sound as related to radio science—Measuring instruments—Power supply—Resistors—Inductors—Condensers—Transformers and examples—Broadcasting stations—Radio Telephony—Receivers—Diagrams—Construction—Control systems—Loudspeakers—Antennas—Auto Radio—Phonograph pickups—Public Address Systems—Aircraft & Marine Radio—Radio Compass—Beacons—Automatic Radio Alarms—Short Wave—Coil Calculations—Testing—Cathode ray oscillographs—Static Elimination—Trouble Pointers—Underwriter's standards—Units & tables. REVIEW QUESTIONS—Ready Reference Index.

HIGHLY ENDORSED—ASK TO SEE IT ON 7 DAYS' FREE TRIAL

MAIL COUPON TODAY

THEO. AUDEL & CO., Publishers, 49 West 23rd St., New York

Mail AUDELS NEW RADIOMAN'S GUIDE for free examination. If O.K. I will send you $1 in 7 days; then remit $1 monthly until $4 is paid. Otherwise I will return it.

Name.....

Address.....

Occupation.....

Reference.....

QST

$4 COMPLETE PAY ONLY $1 A MO.

TRIPLETT

Thin-Line INSTRUMENTS

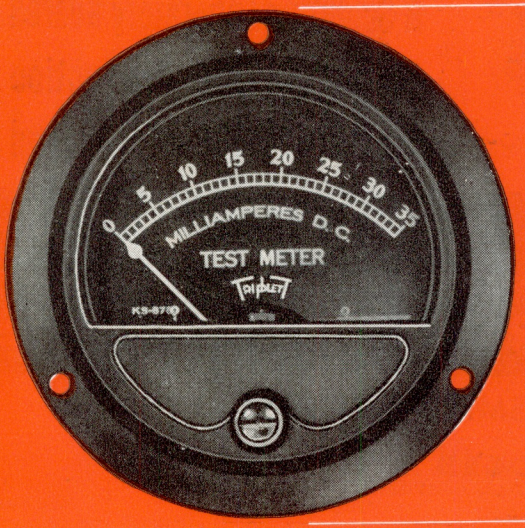

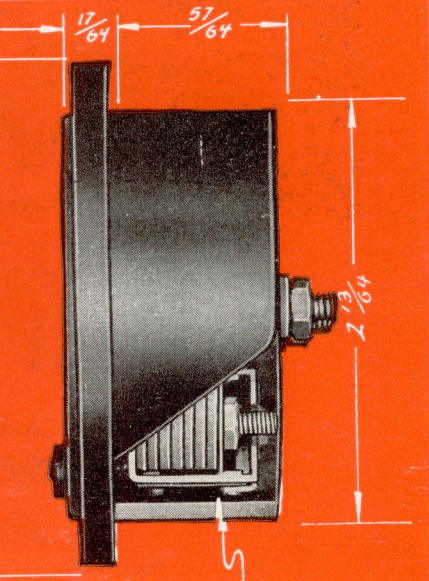

NOTE – THIN MOLDED CASE WITH FULL SIZE TRIPLETT MECHANISM.

FULL SIZE TRIPLETT MECHANISM.

TRIPLETT *Thin-Line*

INSTRUMENT "SPECS"

- Minimum case depth.
- Full standard size rigid mechanism . . . no projecting base.
- Wider shroud strengthens face: focuses attention on scale.
- Simplified zero adjustment.
- Sapphire or equivalent jewels. All component parts finely made and of superior quality.
- Balanced Bridge Support.
- Metal Bridges at both ends.
- Separate Scale Mounting.
- Doubly Supported Core.

Also available in metal case

NOTE: When space is at a premium and for all installations where space is efficiently used, Triplett Thin-Line Instruments set a new standard of precision performance in "condensed" space. For full details write for Triplett Thin-Line Bulletin to The Triplett Electrical Instrument Co., Bluffton, Ohio.

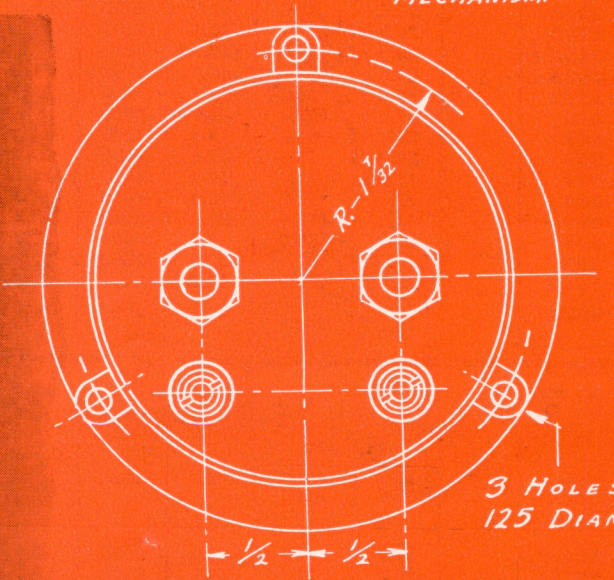

3 HOLES, 125 DIAM.

DIMENSIONS OVERALL WITH STUDS & NUTS. ORDER K. S. 8789

0221-T

THE TRIPLETT ELECTRICAL INSTRUMENT CO.
BLUFFTON, OHIO, U.S.A.

DRAWN	H.A.	4-29-42
CHECKED	W.F.	5-16-42
APPROVED	J.A.	5/16/42

5417X



AMPEREX

A Scientific Laboratory Geared for Large-Scale Production of Water and Air Cooled

TRANSMITTING and RECTIFYING TUBES

AMPEREX TRANSMITTING TUBES

WATER-COOLED TYPES

TYPE NO.		FILAMENT Volts	FILAMENT Amps.	Mu	Gm	Capacitance Grid to Plate	*PLATE Max. Volts	*PLATE Max. Amps.	*PLATE Max. Dissipation Watts	*Nominal Output Watts	Max. Freq. MC. At Max. Plate Input	Max. Freq. MC. At 50% Max. Plate Input
207		22.0	52.0	20.0	6500	27.0	15000	2.00	10000	C20000	1.6	20
220C		21.5	41.0	35.0	5000	22.0	15000	1.00	10000	BR2500	3.0	30
228A		21.5	41.0	17.0	6500	23.4	6000	.75	3000	BR1000	1.5	20
232C		20.0	72.0	40.0	8000	22.0	20000	2.00	20000	BR8500	1.5	20
342A		20.0	67.0	40.0	6820	27.0	18000	1.40	25000	BR8500	4.0	16
343A		21.5	57.5	40.0	6750	23.5	15000	.70	10000	BR3500	4.0	8
520B		22.0	34.0	17.0	5000	27.0	10000	1.20	5000	C5000	2	.....
846		11.0	51.0	40.0	2800	9.0	7500	1.00	1600	C2500	50	150
848		22.0	52.0	8.0	4200	27.0	12000	....	7500	A2000	1.6	20
858		22.0	52.0	42.0	4500	18.0	20000	2.00	20000	C20000	1.6	40
859		11.0‡	71.0	36.0	8000	15.0	20000	3.50	20000	C35000	1.5	40
863		22.0	52.0	50.0	7000	27.0	15000	2.00	7500	B22000	1.6	20
889		11.0	195.0	21.0	8000	17.5	7500	2.00	5000	C10000	50	150
891		11.0‡	60.0	8.0	4200	27.0	15000	2.00	5000	B22000	1.6	20
892		11.0‡	60.0	50.0	7000	32.0	10000	1.00	6600	CP6000	1.6	20
1652		14.5	52.0	14.0	....	27.0	7500	1.25	5000	C6000	1.5	10
HF50K		27.0** / 13.5**	100.0 / 200.0	36.0	1600	20.0	20000	5.00	30000	øC25000	10	50

‡ Single or two-phase filament (two units); voltage is per unit. ** Single or two-phase filament excitation. ø At upper frequency limit of 50 megacycles.

FORCED-AIR COOLED TYPES

TYPE NO.		FILAMENT Volts	FILAMENT Amps.	Mu	Gm	Capacitance Grid to Plate	*PLATE Max. Volts	*PLATE Max. Amps.	*PLATE Max. Dissipation Watts	*Nominal Output Watts	Max. Freq. MC. At Max. Plate Input	Max. Freq. MC. At 50% Max. Plate Input
220R†		21.5	41.0	35.0	5000	22.0	12500	1.00	6000	BR2500	4.0	30
232R†		20.0	72.0	40.0	8000	22.0	12500	2.00	7500	CP10000	3.0	20
343R†		21.5	57.5	40.0	6750	23.5	7500	1.50	5000	CP5000	4.0	30
889R‡		11.0	125.0	21.0	8000	19.0	6000	1.00	3000	CP4000	25	100
891R†		11.0‡	60.0	8.0	4200	28.0	10000	2.00	4500	B10000	1.6	20
892R†		11.0‡	60.0	50.0	7000	32.0	8500	1.00	4000	CP5000	1.6	20
HF3000°		21.5	40.5	16.0	6500	10.0	10000	1.35	3000	C7500	20	50
ZB3200°		21.5	40.5	85.0	5000	10.0	10000	1.50	2000	B8000	20	50

* $75.00 credit will be allowed against purchase of new tube if radiator and crate are returned in good condition.
‡ Single or two-phase filament (two units); voltage is per unit.
° All glass radiation and air-cooled transmitting tubes.
† $100.00 credit will be allowed against purchase of new tubes if radiator and crate are returned in good condition.

RADIATION COOLED TYPES

TYPE NO.	FILAMENT Volts	FILAMENT Amps.	Mu	Gm	Capacitance Grid to Plate	*PLATE Max. Volts	*PLATE Max. Ma.	*PLATE Max. Dissipation Watts	*Nominal Output Watts	Max. Freq. MC. At. Max. Plate Input	Max. Freq. MC. At. 50% Max. Plate Input
AB-150	10.0	3.25	5.3	3400	9.5	1500	.....	100	AB150	.....	.....
HF- 60	10.0	2.50	20.0	5000	5.2	1600	150	60	C100	30	100
HF- 75	10.0	3.25	12.5	4000	2.0	2000	120	75	C150	75	200
HF-100	10.0	2.50	23.0	4200	4.5	1500	150	75	C150	30	150
HF-120	10.0	3.25	12.0	4500	10.5	1250	175	100	C150	20	80
HF-125	10.0	3.25	25.0	4500	11.5	1500	175	100	C200	30	90
HF-130	10.0	3.25	12.5	4300	9.0	1250	210	125	C170	20	90
HF-140	10.0	3.25	12.0	4500	12.5	1250	175	100	C150	15	60
HF-150	10.0	3.25	12.5	4300	7.2	1500	210	125	C200	30	100
HF-175	10.0	4.00	18.0	5000	6.3	2000	250	125	C300	25	100
HF-200	10.5	4.00	18.0	5000	5.8	2500	200	150	C350	20	100
HF-250	10.5	4.00	18.0	5000	5.8	3000	200	150	C375	20	100
HF-300	11.0	4.00	23.0	5600	6.5	3000	275	200	C600	20	100
ZB-120	10.0	2.50	30.0	5000	5.2	1500	160	75	B300	30	90
111H	10.0	2.50	23.0	4200	4.6	1500	160	75	C175	25	50
203A	10.0	3.25	25.0	4500	13.5	1250	175	100	C150	15	80
203H	10.0	3.25	25.0	4500	11.5	1500	175	100	C200	30	90
204A	11.0	3.85	23.0	4000	15.0	2500	275	250	C500	3	30
211	10.0	3.25	12.0	4500	12.5	1250	175	100	C150	15	80
211C	10.0	3.25	12.5	4300	9.0	1250	210	125	C175	20	90
211H	10.0	3.25	12.5	4300	7.2	1500	210	125	C200	30	100
212E	14.0	6.00	16.0	8000	19.0	2000	350	275	BR75	1.5	3.0
241B	14.0	6.00	16.0	8500	18.8	2000	350	275	C400	7.5	20
242A	10.0	3.25	12.5	3600	13.0	1250	150	85	A20	6	25
242B	10.0	3.25	12.5	3600	13.0	1250	150	100	A20	6	25
242C	10.0	3.25	12.5	3600	13.0	1250	150	100	A20	6	25
251A	10.0	16.00	10.5	3800	8.0	3000	600	1000	C1200	30	60
261A	10.0	3.25	12.0	4000	9.0	1250	210	125	C175	30	50
270A	10.0	9.75	16.0	5700	21.0	3000	375	350	C700	7.5	20
276A	10.0	3.25	12.0	4000	9.0	1250	210	125	C175	30	50
279A	10.0	21.00	10.0	5000	18.0	3000	800	1200	BR500	20	40
304B	7.5	3.25	11.0	2000	2.5	1250	100	50	C85	100	350
308B	14.0	6.00	8.0	7500	17.4	2250	325	250	A50	1.5	3
800	7.5	3.25	15.0	2000	2.5	1250	80	35	C65	60	190
801	7.5	1.25	8.0	1600	6.0	600	70	42	C25	60	120
805	10.0	3.25	50.0	4800	6.0	1500	210	125	B400	30	80
810	10.0	4.50	35.0	5000	4.8	2000	250	125	C375	30	100
830	10.0	2.50	8.0	2000	9.9	750	130	40	C60	6	50
830B	10.0	2.50	25.0	3080	11.0	1000	150	60	B175	15	65
833	10.0	10.00	35.0	8000	6.3	3000	500	300	C1000	30	100
834	7.5	3.25	11.0	2000	2.5	1250	100	50	C75	100	350
838	10.0	3.25	50.0	4800	8.0	1250	175	100	B275	30	120
841	7.5	1.25	30.0	750	7.0	425	60	15	B25	6	50
842	7.5	1.50	3.0	1250	7.0	425	.....	12	A3	.....	.....
845	10.0	3.25	5.3	3400	11.5	1250	.....	75	A25	.....	.....
849	11.0	5.00	19.0	6000	33.0	3000	350	300	B1225	3	30
849A	11.0	7.70	19.0	7600	11.5	4000	500	500	B1900	3	30
849H	11.0	7.70	19.0	7600	11.5	3500	500	500	C1180	20	40
851	11.0	15.50	20.5	15000	47.0	2500	1000	750	C1700	3	15
852	10.0	3.25	12.0	1200	2.6	3000	150	100	C165	30	120

* Ratings given are typical of the class of service in which the tube is most commonly used.

The letter preceding each rating identifies the particular class of service as follows:

A —power output per tube as Class A power amplifier and modulator

AB—power output per pair of tubes as Class AB power amplifier and modulator

B —power output per tube as Class B power amplifier and modulator

BR—power output per pair of tubes as Class B Radio Frequency power amplifier

C —power output per tube as Class C power amplifier or oscillator

CP—power output per tube as Class C plate modulated power amplifier

AMPEREX RECTIFYING TUBES

MERCURY VAPOR RECTIFIERS

TYPE NO.	FILAMENT Volts	FILAMENT Amps.	Peak Inverse Volts	Approx. ◆Ave. Plate Amps.	Peak Plate Amps.
249B	2.5	7.50	7500	0.50	1.5
258B	2.5	7.50	7500	0.50	1.5
266B	5.0	42.00	22000	7.00	20.0
267B	5.0	6.75	10000	1.25	5.0
315A	5.0	10.00	15000	1.50	6.0
575A	5.0	10.00	15000	1.50	6.0
857B	5.0	40.00	22000	10.00	40.0
866	2.5	5.00	7500	0.25	1.0
866A	2.5	5.00	10000	0.25	1.0
869B	5.0	20.00	20000	2.50	10.0
872A	5.0	6.75	10000	1.25	5.0

◆ Actual value will depend on wave-form resulting from load and filter circuit.

WATER-COOLED VACUUM RECTIFIERS

TYPE NO.	FILAMENT Volts	FILAMENT Amps.	Peak Inverse Volts	Ave. Emission Amps.	Peak Plate Amps.
222A	21.5	41.00	25000	7.0	5.5
237A	20.0	61.00	50000	10.0	8.0

RADIATION COOLED HIGH VACUUM RECTIFIERS

TYPE NO.	FILAMENT Volts	FILAMENT Amps.	Peak Inverse Volts	Ave. Emission Amps.	Peak Rate Amps.
8020	5	6	40000	0.100	0.750
221A	5	10	25000	0.300	1.5

AMPEREX

ELECTRONIC PRODUCTS

79 Washington St. • Brooklyn 1, N. Y.

EXTRA

TYPEWRITER KEYBOARD PERFORATOR AND TRANSMITTER OF THE WHEATSTONE TYPE



SEVERAL different types of these instruments will be available. » One type is a complete perforator and transmitter in one unit designed to be used on heavy circuits now manually operated. This will provide high speed, accurate transmission with less fatigue for both the sending and receiving operator. It will also greatly reduce the possibilities of errors. The transmitting, of course, may be done by a typist with no knowledge of the code. » There will be available also the regular commercial type of separate perforator and transmitter.

FOLDER WITH FULL DESCRIPTION WILL BE FURNISHED UPON REQUEST



Also complete line of Code Instruction instruments. MASTER TELEPLEX remains the only Code instructor that will record your own sending so that you can see exactly how you make your signals and then repeat them back to you.

WRITE FOR BOOKLET QB

TELEPLEX CO.

107 Hudson Street «» Jersey City, N. J.



NEGLIGIBLE HARMONIC DISTORTION

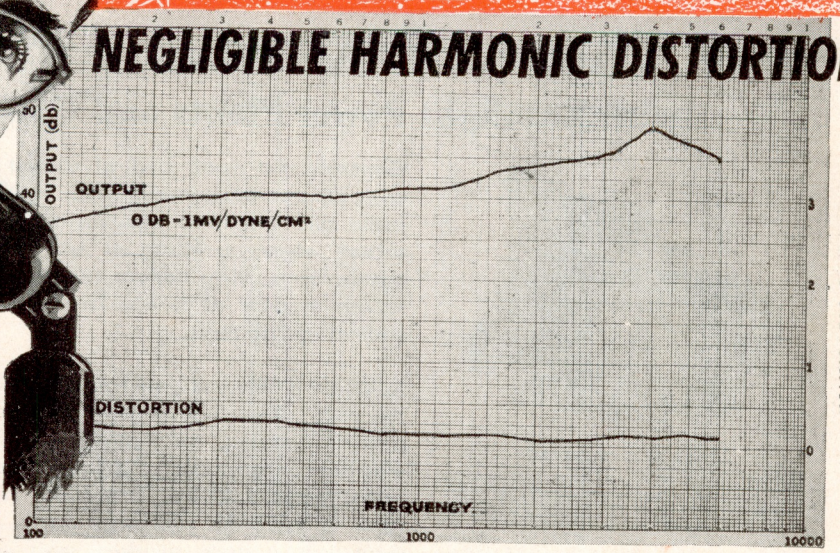

A Statement of Fact —Not a Boast

Every microphone manufactured by Electro-Voice has been designed and developed by our engineers—many in collaboration with the U. S. Army Signal Corps.

Harmonic distortion is the addition of spurious frequencies to the fundamental in definite harmonic relationship. Though the frequency curve may be excellent, harmonic distortion turns up as raspy reproductions, with an unnatural twang in microphones, amplifiers and speakers. Five percent is considered a satisfactory upper limit for good reproduction, and as much as fifteen percent is allowable for speech communication.

Now come new Electro-Voice Dynamic Microphones with radical innovations in diaphragm fabrication, reducing harmonic distortion to a lower degree than hitherto possible. Cleaner, crisper, more highly intelligible reproductions are achieved. New Electro-Voice Dynamic Microphones are aiding both the CAA and the Signal Corps in securing improved communications. If you are a manufacturer of war equipment, details will be sent upon request.

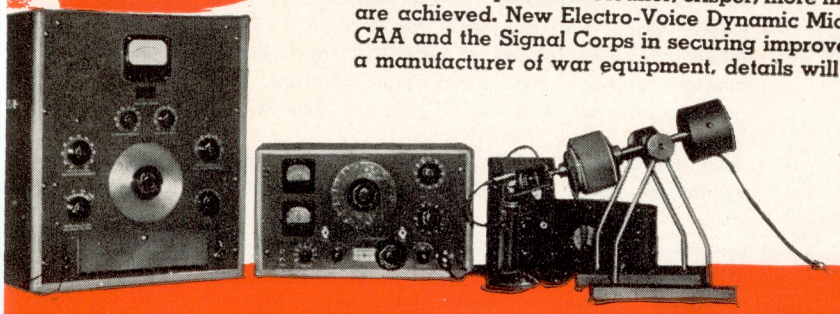

The Harmonic Wave Analyzer measures the presence of spurious frequencies introduced by microphone distortion. To the ear, such frequencies give the feeling of ragged and false speech quality that may be unintelligible under the stress and strain of battle.

Electro-Voice engineers have found a way to eliminate harmonic distortion in microphone design, as proved by the Wave Analyzer; and the completely natural reproduction from the new Electro-Voice microphones.



Electro-Voice MICROPHONES

ELECTRO-VOICE MANUFACTURING CO., INC. · 1239 SOUTH BEND AVENUE · SOUTH BEND, INDIANA

Export Division: 13 East 40th Street, New York 16, N. Y. — U. S. A. *Cables: ARLAB*

KATOLIGHT

110-VOLTS A.C. ANYTIME, ANYWHERE!

with Katolight Power Plants and Generators

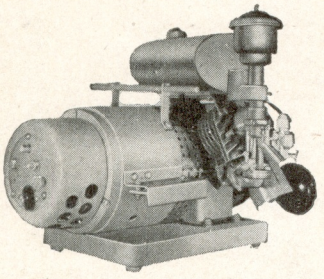

23A, 500 WATTS, AC

500-watt, self-excited generator, 110-volts, 60-cycle AC 1800 r.p.m. Bolted directly to engine crankcase. 22 amperes at 6-volts DC may be drawn from the DC terminals when plant is not carrying full AC load. Brushes easily accessible for adjustment and inspection. Filtered and shielded for radio operation. Powered with a Johnson 1 h.p. single cylinder aircooled engine. 21" long x 16½" wide x 17½" high, weight 135 lbs.; shipping wt. 170 lbs.

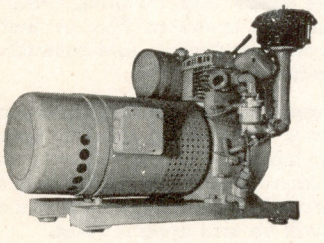

28A, 1500 WATTS, AC

1500-watt, self-excited generator, 110-volts, 60-cycle AC 1800 r.p.m. Bolted directly to engine crankcase. Brushes easily accessible for replacement and adjustment. Filtered and shielded for radio operation. Good voltage regulation. Plant complete ready to go by adding gasoline and oil. Powered with a Briggs & Stratton Model ZP, single cylinder, aircooled engine.

Generate the same kind of current obtained from power lines for operating transmitters, receivers, sound apparatus, radio and electronic equipment, lights, etc. For continuous service where no source of A.C. is available—for summer homes, farms, filling stations, resorts or for standby emergency service in case of power line failure for hospitals, radio stations and so forth.

Katolight Plants and generators supply electricity right out in the field where power line hook-up is not available. They permit equipping our fighting forces with the most modern electrical appliances. Fighting forces need guns, planes, tanks, trucks, kitchens, emergency hospitals, lights, and so forth. To keep this equipment going, complete repair equipment such as drills, grinders, saws, air compressors, grease guns, and electrical testing devices are needed. Katolight generators supply this electricity. They also supply current for beacons, land field controls and other uses too numerous to mention.

350 through 25,000 watts capacities available

Can be furnished for all standard voltages, 110, 220, or 440 volts single phase or 115/230 or 220/440, four ring, single phase. Also available for straight 110, 220 or 440, three wire, three phase or 120/208 four wire, three phase. Inherent voltage regulation approximately 10% between no load and full load with 3% speed change.

Also manufacturers of A.C. and D.C. generators, motor generators, high frequency generators, frequency changers, etc.

Watts Capacity	Model No.	Code Word	Type of Cooling	Make of Engine	No. Cyl.	Engine H.P.	Cranking Volts	Ship. Wt.	List Price
110-VOLTS, 60-CYCLE, 1800 R.P.M.									
350	19HAJ4	ABODE	air	Johnson	1	⅝	6	125	$102.00
500	23HAJ4	ABTOL	air	Johnson	1	1	6	170	158.00
600	14HAB4	ALERT	air	*B & S	1	1.4	12	220	210.00
1000	26HAB4	ABBOT	air	*B & S	1	2.4	12	295	298.00
1500	28HAB4	ABEAR	air	*B & S	1	4.5	18	340	365.00
2000	30HAB4	ABIDE	air	*B & S	1	5	18	360	450.00
4000	44HAW4	ACTIN	air	LeRoi	4	13	24	800	750.00
5000	45HAL4	ALBION	water	LeRoi	4	16	32	880	850.00
7500	47HAL4	ALBON	water	LeRoi	4	19	6	1290	1350.00
10,000	49HAL4	ALBUN	water	LeRoi	4	26	6	1680	1460.00
15,000	51HAL4	ACTIV	water	LeRoi	4	38	6	1680	1630.00
1200 R.P.M.									
5000	45HAL6	ALBERT	water	LeRoi	4	19	6	1290	1100.00
7500	47HAL6	ALBOX	water	LeRoi	4	26	6	1680	1460.00
10,000	49HAL6	ALBUS	water	LeRoi	4	38	6	1680	1630.00
15,000	51HAL6	ALBAT	water	LeRoi	4	38	6	1680	1760.00

*Briggs & Stratton

KATOLIGHT

KATOLIGHT ROTARY KONVERTERS

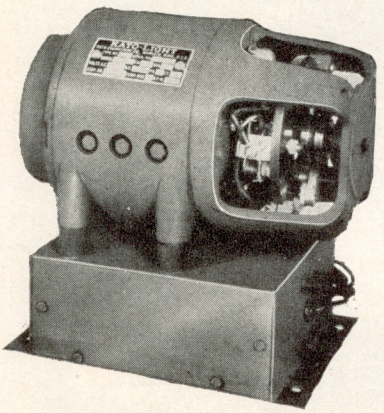

MODEL 5KA23, 5KA33, 5KA43
225 volt-amperes continuous load capacity at 3600 R.P.M. 40°C Temperature Rise

Illustrations show machines with covers removed

Specifications on machines with special voltages furnished on request

Changes 32, 110 or 220-volts D.C. to standard 110-volt, 60-cycle A.C. Permits using standard 60-cycle A.C. appliances where the source of current is direct current.

Everything has been done in the design of these machines to minimize radio interference, reduce ripple and to provide best possible wave form. D.C. ripple is low because of extra number of commutator bars. Pole pieces shaped from scientific procedure eliminating trouble making harmonics. Very high efficiency due to low loss 26 Gauge electrical sheets.

Furnished with and without filter. Filter not needed for operation of appliances such as electric signs, amplifiers, etc. Special filters furnished upon specification. Smaller sizes available with governor. Recommended where D.C. input voltage is not steady.

Power factor of load should be specified when ordering converter. If unknown, describe load—whether transformers, electric motors or resistive.

KATO ROTARY KONVERTERS, 3600 R.P.M., BALL BEARING

D.C. Input	*Capacity Volt-Amperes	Output A.C.	Model No.	Code Word	Frame Patt. No.	R.P.M.	Dimensions Without Filter			Net Wt.	Ship. Wt.
							Length	Height	Width		
32	110	110	3KA43	KIT	641	3600	8 1/2''	7 1/16''	6 7/8''	29	39
32	150	110	4KA43	KIG	5–1	3600	10 3/4''	7 1/16''	6 7/8''	52	62
32	225	110	5KA43	KIY	5–1	3600	10 3/4''	7 1/16''	6 7/8''	52	62
32	350	110	19KA43	KIN	7–1	3600	11 3/4''	7 13/16''	7 13/16''	65	75
32	500	110	23KA43	KIB	642	3600	12 7/8''	7 13/16''	7 13/16''	72	85
32	750	110	14KA43	KID	627	3600	12 7/8''	10 7/8''	11 1/2''	105	125
32	1000	110	26KA43	KIP	627	3600	12 7/8''	10 7/8''	11 1/2''	111	131
110	110	110	3KA33	KAT	641	3600	8 1/2''	7 1/16''	6 7/8''	29	39
110	150	110	4KA33	KAG	5–1	3600	10 3/4''	7 1/16''	6 7/8''	52	62
110	225	110	5KA33	KAY	5–1	3600	10 3/4''	7 1/16''	6 7/8''	52	62
110	350	110	19KA33	KAN	7–1	3600	11 3/4''	7 13/16''	7 13/16''	65	75
110	500	110	23KA33	KAB	642	3600	12 7/8''	7 13/16''	7 13/16''	72	85
110	750	110	14KA33	KAD	627	3600	12 7/8''	10 7/8''	11 1/2''	105	125
110	1000	110	26KA33	KAP	627	3600	12 7/8''	10 7/8''	11 1/2''	111	131
220	110	110	3KA23	KET	641	3600	8 1/2''	7 1/16''	6 7/8''	29	39
220	150	110	4KA23	KEG	5–1	3600	10 3/4''	7 1/16''	6 7/8''	52	62
220	225	110	5KA23	KEY	5–1	3600	10 3/4''	7 1/16''	6 7/8''	52	62
220	350	110	19KA23	KEN	7–1	3600	11 3/4''	7 13/16''	7 13/16''	65	75
220	500	110	23KA23	KEB	642	3600	12 7/8''	7 13/16''	7 13/16''	72	85
220	750	110	14KA23	KED	627	3600	12 7/8''	10 7/8''	11 1/2''	105	125
220	1000	110	26KA23	KEP	627	3600	12 7/8''	10 7/8''	11 1/2''	111	131
1800 R.P.M. BALL BEARING											
32	350	110	19KA44	KINK	232–1	1800	12 7/8''	9''	9''	87	106
32	500	110	23KA44	KICE	263–1	1800	12 3/4''	10 1/2''	10 1/4''	135	171
32	750	110	14KA44	KITE	263–1	1800	12 3/4''	10 1/2''	10 1/4''	135	171

*Watts when operating non inductive load

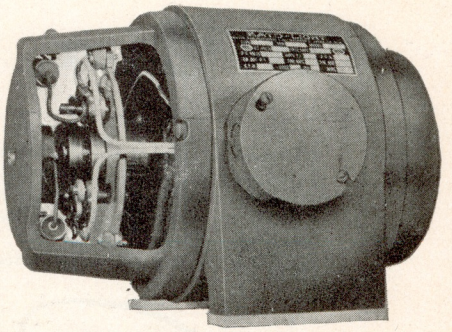

MODEL 19KA23, 19KA33, 19KA43
350 volt-amperes continuous load capacity at 1800 R.P.M. 40°C Temperature Rise

KATO ENGINEERING COMPANY, Inc., MANKATO, MINNESOTA



3 Plants . . . 2 Flags . . . ONE PURPOSE

To beat the band of Axis bandits, three Solar factories are now operating "round the clock". The men and women of Eastern Plants 1 and 2 were told "Well Done" by the Army and Navy; they proudly wear the Army-Navy "E".

The Midwestern Plant has just started production; the men and women of this modern air-conditioned factory are ready to help you speed the day of Victory.

If your capacitor or filter problem is made ours, you can be certain of "Quality Above All".

Solar Manufacturing Corporation, General Offices: Bayonne, New Jersey.

Solar SOLAR —CAPACITORS—

CAPACITORS and RADIO NOISE-SUPPRESSION FILTERS

3762

WHEREIN WE SERVE

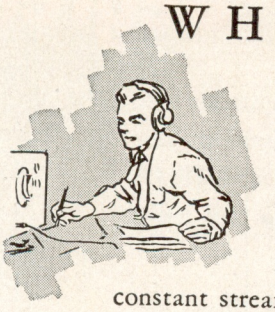

New and unusual calls for wartime supply have enlarged the scope of Allied service. As a result, Allied has been termed a centralized arsenal of supply for *everything in radio and electronics*. Twenty years of specialized experience has made this possible. From the large Allied stock flows a constant stream of radio and electronic parts and equipment . . . earmarked for the war training centers, the battle fronts, the war plants, the laboratories and the government agencies of the United Nations.

★ Perhaps the soldier who transmits urgent battlefront messages was trained on equipment supplied by Allied Radio. Perhaps a vital production line was kept going, a new development project completed sooner, a communications service maintained, or a needed repair part quickly obtained—because of some service Allied was able to render.

★ Close contact with all leading manufacturers has been a factor in coordinating and simplifying procurement of every type of item for radio communications, as well as industrial electronic applications. Precious time has been saved . . . deliveries have been expedited. A technical staff frequently assists on design and application problems.

★ This *complete centralized service* has provided purchasers with a convenient, dependable source of supply for all their needs. During the emergency every effort is being made to supply available repair and replacement parts without priority. And, when Victory is won, Allied's wartime experience will make it possible to render an even broader and more helpful peacetime service.



ALLIED BUYING GUIDE—*Thousands find this catalog a convenient, procurement guide. A copy will be supplied on request. Whatever the need in radio and electronics, most likely Allied can supply it.*

ALLIED RADIO CORP., 833 W. Jackson Blvd., Dept. 10-44, Chicago 7, Ill.

As a special wartime service, Allied has prepared a series of technical books for radio training and for helpful reference on the job. They are available at the cost of preparation and mailing.



HELPFUL TECHNICAL BOOKS

Radio Builders' Handbook No. 37-750
Dictionary of Radio Terms No. 37-751
Radio Formulas & Data Book No. 37-752
Radio Circuit Handbook . . No. 37-753
Simplified Radio Servicing No. 37-755
Above Books 10c each
Radio Data Handbook No. 37-754—25c
All Six Books . . . No. 37-799 — 75c
Write for Quantity Quotations.

Allied Radio
Everything in Radio and Electronics

PRECISION to the "Nth" Degree

Perfect co-ordination of skilled minds and hands in a well knit organization with 20 years of radio manufacturing experience has been the secret of MERIT'S success in building precision equipment to the most exacting specifications.

Now manufacturing for every branch of the Armed Services, including component parts for the Army's famous SCR-299 mobile unit.

Enlarged facilities enable us to offer prompt shipment on priority orders.

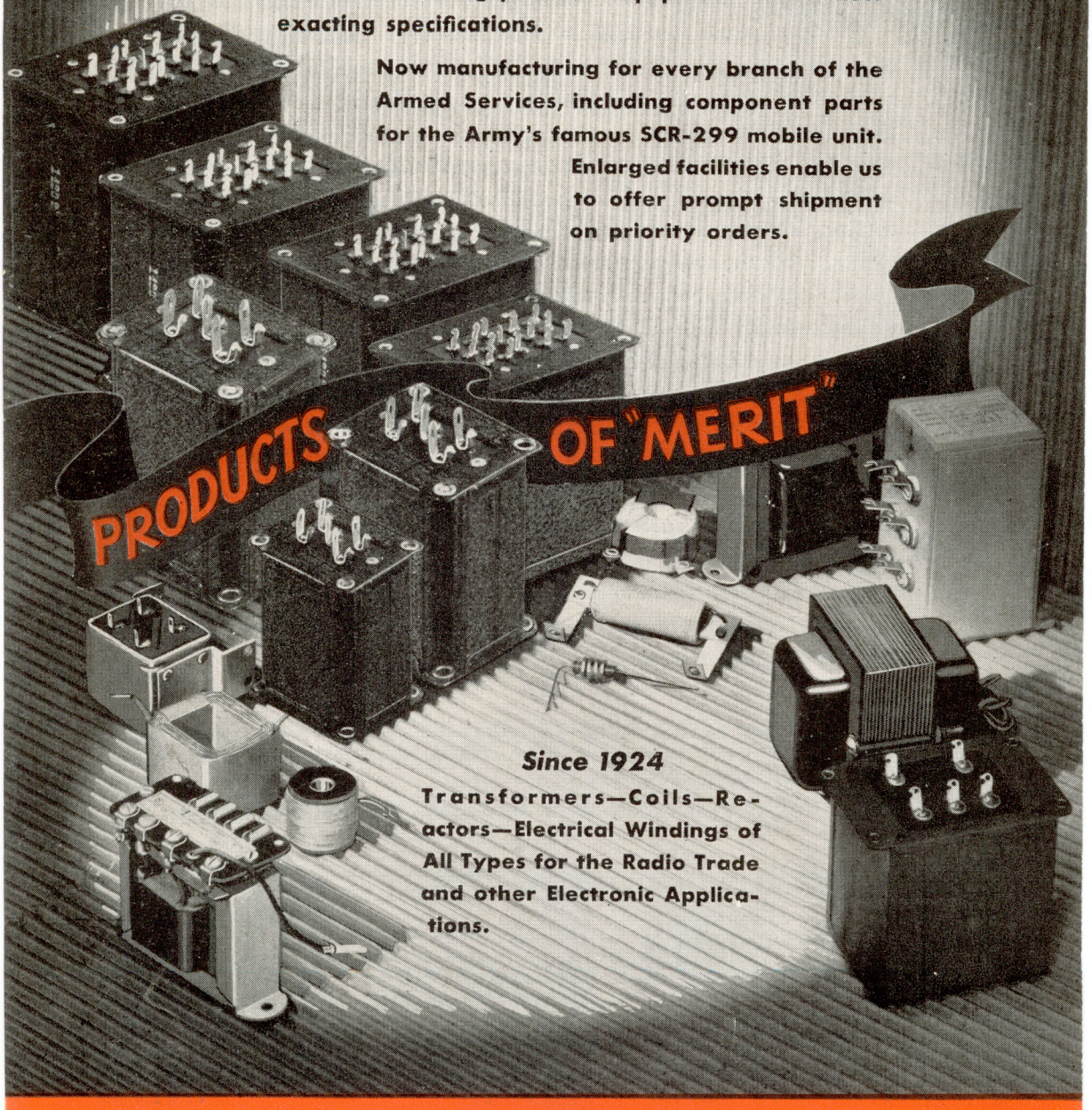

Since 1924

Transformers—Coils—Reactors—Electrical Windings of All Types for the Radio Trade and other Electronic Applications.

MERIT COIL & TRANSFORMER CORP.

311 NORTH DESPLAINES ST. CHICAGO 6, U. S. A.

America's Finest Key

The Key Champions Prefer

GENUINE EASY-WORKING

VIBROPLEX

Reg. Trade Marks: Vibroplex, Lightning Bug, Bug

Semi-Automatic Radio Telegraph Key

The "BUG" Trade Mark identifies the Genuine Vibroplex

The "CHAMPION"

ONLY $9.95

Answers every need for a low-priced semi-automatic radio key that's smart, efficient and dependable. Easy to use. Full size black crackle base. Bright plated parts. 3/16th contacts. Without circuit closer, cord and wedge. *For radio use only.*

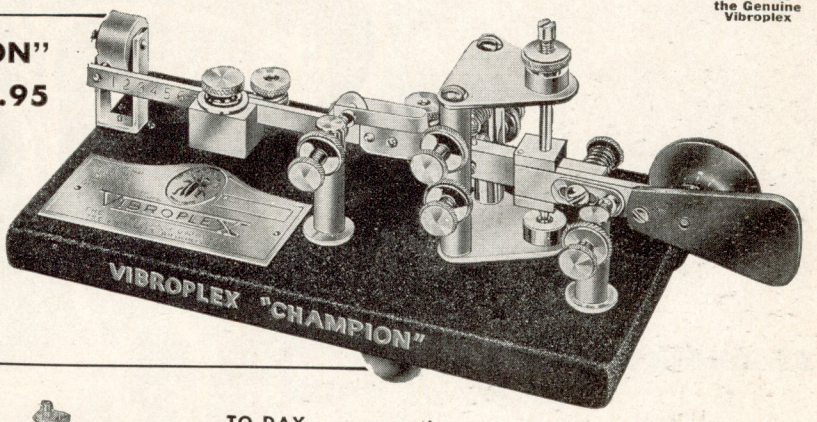

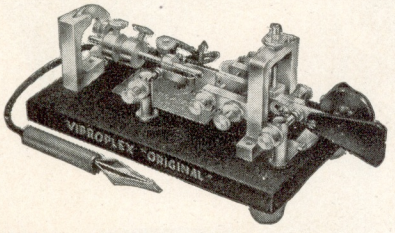

TO-DAY . . . more than ever before telegraphing demands the utmost in sending skill and endurance to withstand long operating periods. Day after day the world over . . . the VIBROPLEX SEMI-AUTOMATIC KEY is demonstrating its ability to develop sending skill to a remarkable degree, and at the same time cut sending effort in half. No wonder experienced operators—over 100,000 of them—use only VIBROPLEX.

FAMOUS "ORIGINAL" MODEL

This popular key has proved its ability to do a high-class sending job anywhere, anytime. Internationally famous for its smooth, rhythmic action, distance reach, superior signal and easy manipulation. Every necessary detail perfected for expert sending performance. Standard black crackle base. Bright machined parts. Precision construction including **DIE CUT** contact and main spring. 3/16th contacts. Complete with circuit closer, cord and wedge..... **$15.95**

De Luxe finish with Patent Jewel movement..... **$19.50**

EASY-WORKING "LIGHTNING BUG" MODEL

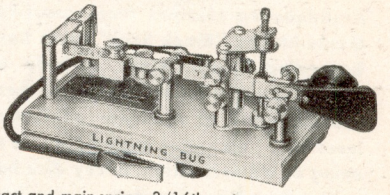

This is an exceptional easy-working key that gives superior sending performance at a low price that need not keep anyone from owning a truly fine radio key. Striking new design. Many advanced features contributing to easier, better, longer-lasting sending pleasure. Standard black crackle base. Bright machine parts. Precision construction including **DIE CUT** contact and main spring. 3/16th contacts. Complete with circuit closer, cord and wedge..... **$13.95**

De Luxe finish with Patent Jewel movemen **$17.50**

HANDY "BLUE RACER" MODEL

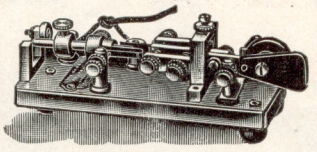

Patterned after the "Original" model. Smaller, handier. A space saver. Surprisingly compact. Sturdily constructed of the finest materials. Capable of the finest sending performance. Easy to handle. Black crackle base. Bright machined parts. Precision construction including **DIE CUT** contact and main spring. 3/16th contacts. Complete with circuit closer, cord and wedge..... **$15.95**

De Luxe finish with Patent Jewel movement..... **$19.50**

DE LUXE MODEL WITH PATENT JEWEL MOVEMENT

Equipped with all the newest improvements necessary to a fine instrument of this type, plus the sensational and exclusive **PATENT JEWEL MOVEMENT,** providing higher quality signals and easier manipulation than has ever before been attained. Bright machined parts. **Battle Ship Gray** base. Colorful red switch knob, finger and thumb piece. Green silk cord and wedge. If you want a key with 'feather-touch' action that will out-perform any key you've ever used—a key that will give you a lifetime of sending pleasure, this is the key for you. Available in three designs. **"Original," "Lightning Bug"** and **"Blue Racer"** models. Specify model when ordering. Remit by money order or registered mail. Write for **FREE** illustrated catalog of Vibroplex Semi-Automatic Keys.

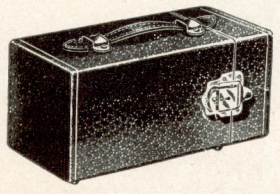

CARRYING CASE

Keeps out dirt, dust and moisture. Prolongs life of key. Handsome black morocco. Heavily reinforced. Flexible leather handle. Patent lock and key..... **$3.50**

Zipper case. Flexible. Genuine leather..... **$2.50**

Why be a galley slave to a hand key? Why run the risk of ruining your 'fist?' VIBROPLEX cuts sending effort in half.

FREE Catalog

THE VIBROPLEX CO., Inc.

833 Broadway **New York, N. Y.**

J. E. Albright, President

GOULD-MOODY "BLACK SEAL" GLASS BASE INSTANTANEOUS RECORDING BLANKS...



RECORDING AMERICA'S *POWERFUL* VOICE

Transmitter of America's Powerful Voice is Radio . . . awake twenty-four hours a day . . . talking to our friends and our enemies . . . transporting Broadway and Hollywood and the girl next door to the boys over there . . . building morale on the home front.

Recording America's Powerful Voice . . . in leading broadcasting stations from coast-to-coast . . . are Gould-Moody "Black Seal" Glass Base Instantaneous Recording Blanks. Made entirely of glass, "Black Seals" are as thin as aluminum, thereby eliminating the necessity of recorder adjustments. No foreign inserts . . . no metal grommets . . . no ageing, hardening or deterioration. Every disc has four holes . . . center-flow thread action . . . may be played back for months without appreciable loss of fidelity. Enclosure of your preference rating extensions with your order will expedite deliveries.

SHARE YOUR BLOOD WITH A WOUNDED SOLDIER

—donate a pint to the Red Cross today—

THE GOULD-MOODY COMPANY

RECORDING BLANK DIVISION

395 BROADWAY, NEW YORK 13, N. Y.



Universal Microphones get around

AS FAR as Universal microphones are concerned there isn't much difference between amateurs at peace and amateurs at war. For, in both cases, they know and use Universal products. From the production line of our factories, to training centers, into actual combat zones, in the supply services, and all branches of the Armed Forces, Universal microphones, jacks, plugs, switches, and other accessories are filling an important niche as vital voice communication components. When peace comes, once more amateurs will renew their allegiance to microphones by Universal, and the many new catalog items, which will be available the world over.

Available from your Radio Jobber. 1700-U Series microphone. Single button carbon type, push-to-talk switch, etc. For trainers, intercommunication and general transmitter service.

UNIVERSAL MICROPHONE CO. LTD.

INGLEWOOD, CALIFORNIA

FOREIGN DIVISION, 301 CLAY STREET, SAN FRANCISCO 11, CALIFORNIA
CANADIAN DIVISION, 560 KING STREET W., TORONTO 2, ONTARIO, CANADA

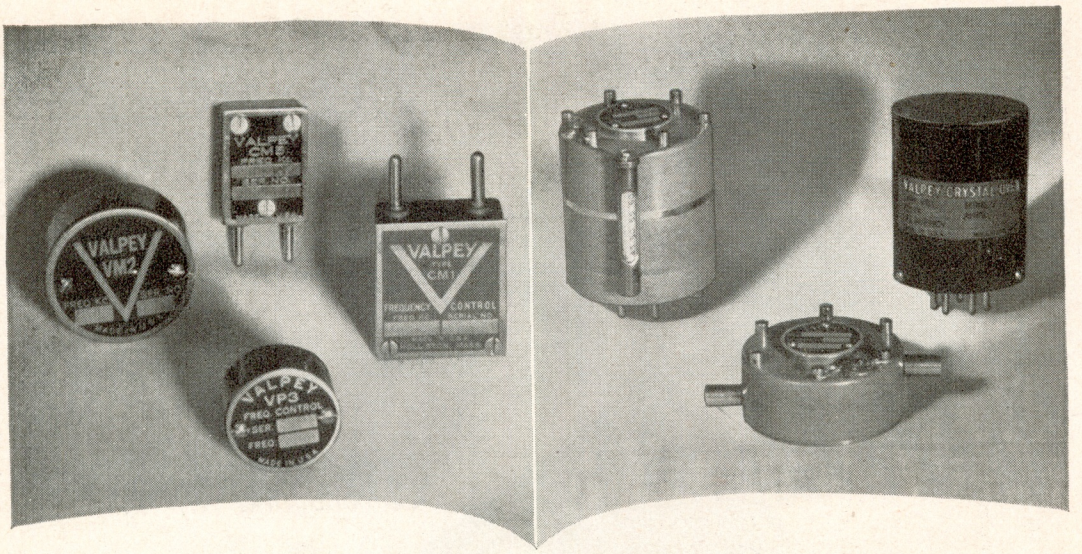

RELIABLE PERFORMANCE

Is Only One of the Many Reasons Why...

Valpey *Crystals*

Meet the Exact Specifications of Our Armed Forces

With peace will come again those products of industry such as radio, television, airplanes, refrigerators, washing machines, etc., which never really were luxuries so much as necessities ... and to those who are thinking in terms of post-war, we are prepared to help build precision parts and accessories for such products required by the electronics industry again, as well as help design and produce many complex new ones that are destined to emerge from this war — plan ahead with — VALPEY.

QUARTZ CRYSTALS *for All Frequency Control Applications*

QUARTZ CRYSTAL MOUNTINGS
TEMPERATURE CONTROL OVENS
QUARTZ PRISMS, LENSES *and Special Optical Pieces*

VALPEY CRYSTAL CORP.

Successor to THE VALPEY CRYSTALS
PLANT AND OFFICES
HIGHLAND AND WASHINGTON STS.
Box 321A, **Holliston, Mass.**

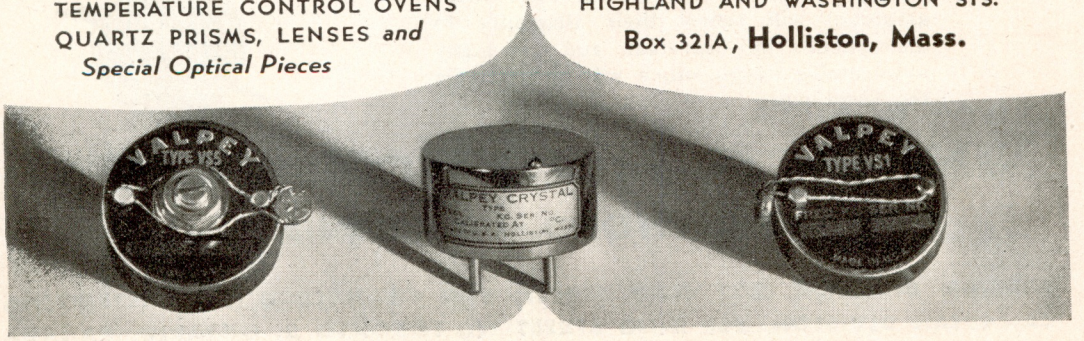

for truly dependable SERVICE

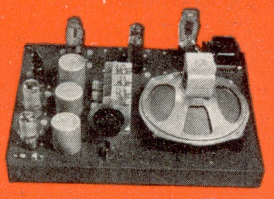

7-TUBE T.R.F. RECEIVER KIT

A complete training unit which may be assembled and operated stage by stage. Tip jacks and jumpers provide means for operating each stage separately or in conjunction with other stages after assembly for many different combinations. Complete with tubes and speaker $22.31

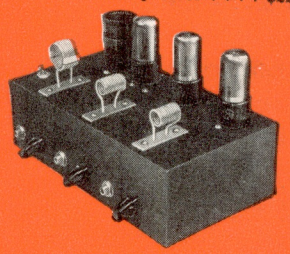

HIGH FREQUENCY TRANSMITTER KIT

R.F. Unit, complete on one chassis. The oscillator circuit, which can be used as crystal or electron coupled, operates at 7 MC. The first doubler operates at 14 MC, and the output stage at 28 MC. Complete with tubes and coils but less crystal . . . $15.90

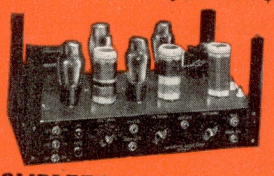

COMPLETE TRANSMITTER TRAINING KIT

Complete in every detail, this kit consists of a 6L6G Hartley type oscillator, a 6L6G neutralized amplifier, 6L6G modulator, and 5Z3 rectifier. Chassis is completely punched and formed with all controls marked and calibrated. Every necessary part is supplied with the exception of meter and microphone. Complete . . $29.00

Lafayette Radio Corporation of Chicago and Atlanta handles the products of every outstanding manufacturer whose advertisements appear in QST Magazine.

Lafayette is proud that the training kits illustrated are being used by the military forces in making thousands of new friends for amateur radio.

159

LAFAYETTE RADIO CORP. CHICAGO

LAFAYETTE RADIO CORP.

901 W. JACKSON BLVD. CHICAGO 7, ILLINOIS

265 PEACHTREE STREET ATLANTA 3, GEORGIA

22 YEARS OF RADIO RELIABILITY

To Manufacturers of Products Used in Short-Wave Radio Communication

THE RADIO AMATEUR'S HANDBOOK is the world's standard reference on the technique of high-frequency radio communication. Now in its twenty-first annual edition, it is universally used by radio engineers as well as the thousands of amateurs and experimenters for whom it is published. Year after year, each succeeding edition has sold more widely than its predecessor, until the Handbook now has a world-wide annual distribution in excess of two hundred thousand copies of its English and Spanish editions. To manufacturers whose integrity is established and whose products meet the approval of the American Radio Relay League technical staff, we offer use of space in the Handbook's Catalog-Advertising Section. Testimony to its effectiveness is the large volume of advertising which the Handbook carries each year. It is truly the standard guide for amateur, commercial and government buyers of short-wave radio equipment. Particularly valuable as a medium through which complete data on products can be made easily available to the whole radio engineering and experimenting field, it offers a surprisingly inexpensive method of producing and distributing a creditable catalog, accomplishes its production in the easiest possible manner, and provides adequate distribution and permanent availability impossible to attain by any other means. We solicit inquiries from qualified manufacturers who wish full data for their examination when catalog and advertising plans are under consideration.

ADVERTISING DEPARTMENT . . .

American Radio Relay League

WEST HARTFORD 7, CONNECTICUT

WHAT

should be asked of a...

HIGH ALTITUDE SUB-ZERO Temperature Test Chamber

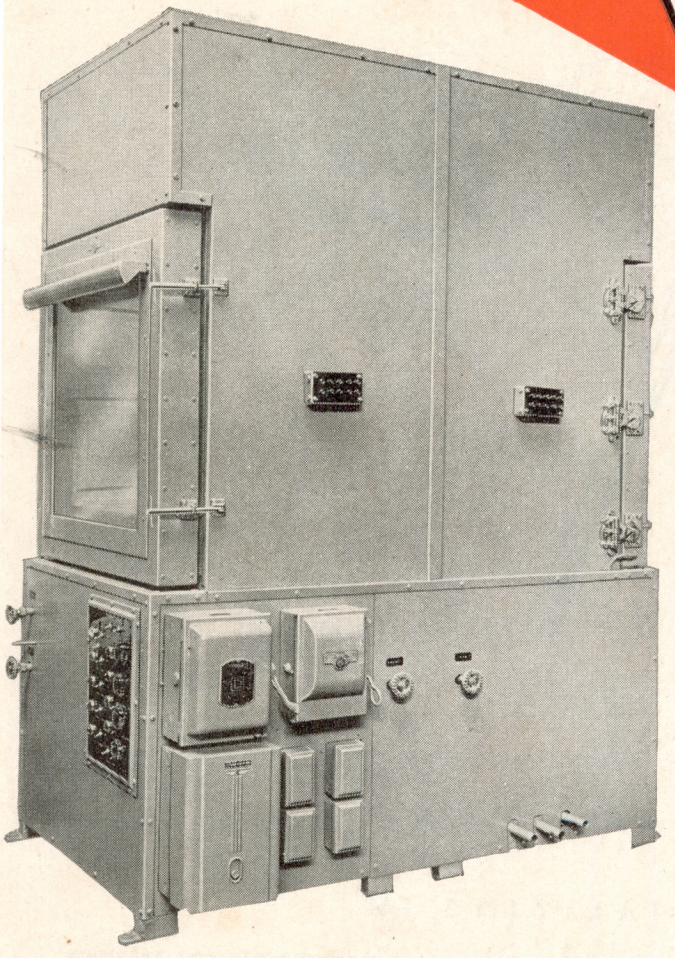

High Altitude Development Chambers

Temperature: —120°F. to +200°F.
Vacuum: to .25 Hg absolute.
Time: complete cycle within 90 minutes.
Size: minimum of 12" x 12" x 12" to any greater capacity.
Humidity: 20% to 95% relative manual or automatic control.

Cold Chambers

Specifications are identical with those listed for altitude chambers, except that cold chambers have no vacuum provision.

Flight Chambers

Temperature: to —120°F., or without refrigeration.
Vacuum: to 80,000 ft. with automatic control of temperature compared to pressure.
Size: 6' x 4' x 4' to as large as 10' x 10' x 50'.
Humidity: manual or automatic control in range between 20% and 95% R. H.

Accessory Instruments

Special Recording Pyrometers
Manometers and Altimeters
Vertical Speed Indicators
Instrument Panels and Switchboards

MOBILE REFRIGERATION

38-32 54th Street
Woodside, L. I., N. Y.

★ DIVISION OF S. F. BOWSER & COMPANY, INC. ★

ESPEY

MANUFACTURING COMPANY, INCORPORATED

SIGNAL GENERATORS - AUDIO OSCILLATORS - TEST EQUIPMENT

RADIO RECEIVERS - TRANSMITTERS - ELECTRONIC DEVICES

Licensed by RCA · HAZELTINE · ARMSTRONG

305 EAST 63rd STREET, NEW YORK CITY 21, N. Y. · Tel.: REgent 7-3090



SPECIALIZING IN

QUALITY TEST INSTRUMENTS ● ULTRA-HIGH FREQUENCY EQUIPMENT

● HIGH-FIDELITY HOME RECEIVERS ●

Prepare to Get your "ticket" with the New 1943 Revised Edition of

DREW'S HOW TO PASS RADIO LICENSE EXAMINATIONS

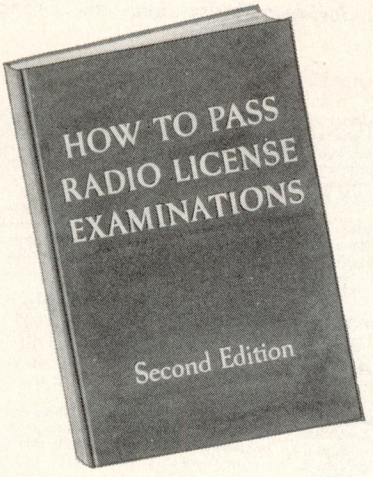

By Charles E. Drew, I.R.E., A.I.E.E.

If you are an amateur and want to win your "ticket" this is the book for you. It will help you pass your radio license examinations.

Now brought up to date, for you who want to win your mark in the radio profession, this edition covers every type of radio activity whether it is marine, aeronautical, police or amateur broadcasting.

Presented in easy-to-follow question and answer form, the new 1943 edition of Drew's HOW TO PASS is the "bible" of radio operators, radiotelephone and telegraph men. Take the sure way to knowledge and equip yourself with this book. Send for your copy today.

Ready in November (1943) *Second Edition*

$3.00

10 Days' Free Examination

For Amateur Radio Operators, Radiotelephone and Telegraph Operators

COVERS

Broadcasting • Marine • Aeronautical or any field of Radio Transmission and Reception

CONTENTS

I. Basic Radio Laws
II. Basic Theory and Practice
III. Radiotelephone
IV. Advanced Radiotelephone
V. Radiotelegraph
VI. Advanced Radiotelegraphy

ON APPROVAL COUPON

JOHN WILEY & SONS, Inc.
440 Fourth Avenue, New York 16, N. Y.

Please send me a copy of Drew's HOW TO PASS RADIO LICENSE EXAMINATIONS on ten days' approval. At the end of that time, if I decide to keep the book, I will remit $3.00 plus postage; otherwise I will return the book postpaid.

Name.....

Address.....

City and State.....

Employed by.....

RAH—1944

THE AMATEUR'S BOOKSHELF

A balanced selection of good technical books, additional to the ARRL publications, should be on every amateur's bookshelf. We have arranged, for the convenience of our readers, to handle through the ARRL Book Department those works which we believe to be most useful. Make your selection from the following, add to it from time to time, and acquire the habit of study for improvement. ***Prices quoted include postage.*** Please remit with order.

Radio Theory and Engineering

FUNDAMENTALS OF RADIO, *by F. E. Terman.* An elementary version of the author's classic "Radio Engineering," simplified in treatment and intended for readers of limited mathematical ability. 458 pages, illustrated. 1938.....**$3.75**

PRINCIPLES OF RADIO, *by Keith Henney.* A medium-level text covering both electrical and radio fundamentals, particularly written for home study. 549 pages, illustrated. 4th edition, 1942.....**$3.50**

BASIC RADIO, *by J. Barton Hoag.* A complete treatment of the circuits used in radio, television and electronics apparatus, including up-to-date applications. 380 pages, illustrated. 1942.....**$3.25**

BASIC ELECTRICITY FOR COMMUNICATIONS, *by W. H. Timbie.* A practical treatment of the electrical principles which underlie communications circuits and practice. 603 pages, illustrated. 1943.....**$3.50**

ELECTRICAL FUNDAMENTALS OF COMMUNICATION, *by A. L. Albert.* Basic electrical circuits and vacuum-tube operation for the communications student. 554 pages, illustrated. 1942.....**$3.50**

RADIO ENGINEERING, *by F. E. Terman.* A comprehensive treatment covering all phases of radio communication. An all-around book for students and engineers, it is a recognized authority in its field. 813 pages, illustrated. 2nd edition, 1937.....**$5.50**

COMMUNICATION ENGINEERING, *by W. L. Everitt.* Complete treatment of network theory, including mathematical analysis of radio circuits and tube operation. 727 pages, illustrated. 1937.....**$5.00**

THEORY AND APPLICATION OF ELECTRON TUBES, *by H. J. Reich.* A comprehensive treatment of the theory, characteristics and applications of electron tubes and their circuits. 670 pages, illustrated. 1939. **$5.00**

RADIO ENGINEERING HANDBOOK, *Keith Henney, Editor.* An authoritative handbook for engineers, with technical data on all fields and aspects of radio, contributed by 23 specialists. 945 pages, illustrated. 1941.....**$5.00**

PRINCIPLES OF AERONAUTICAL RADIO ENGINEERING, *by P. C. Sandretto.* Covers radio aids to air navigation and air communication from the applied engineering viewpoint. 414 pages, illustrated. 1942..**$3.50**

HYPER AND ULTRA-HIGH FREQUENCY ENGINEERING, *by Sarbacher and Edson.* A digest of published literature covering all phases of technique from 30 Mc. to 10,000 Mc. 644 pages, illustrated. 1943....**$5.50**

ULTRA-HIGH-FREQUENCY TECHNIQUES, *by Brainerd, Koehler, Reich and Woodruff.* A complete text on radio engineering, emphasizing v.h.f. and u.h.f. aspects. 534 pages, illustrated. 1942.....**$4.50**

MICROWAVE TRANSMISSION, *by J. C. Slater.* A comprehensive treatment of principles and techniques employed in the region between 300 and 3000 Mc. For the advanced student or engineer. 309 pages, illustrated. 1942.....**$3 50**

FREQUENCY MODULATION, *by August Hund.* An advanced engineering text on f.m., presenting both theory and practice. 375 pages, illustrated. 1942.....**$4.00**

PRINCIPLES OF TELEVISION ENGINEERING, *by D. G. Fink.* Information on the fundamental processes of television reception and transmission, with design data and descriptions of modern equipment. 541 pages, illustrated. 1940.....**$5.00**

Radio Experiments and Measurements

MEASUREMENTS IN RADIO ENGINEERING, *by F. E. Terman.* A comprehensive engineering treatment of the measurement problems encountered in engineering practice, with emphasis on basic principles. 400 pages, illustrated. 1935.....**$4.00**

RADIO FREQUENCY ELECTRICAL MEASUREMENTS, *by H. A. Brown.* A laboratory course in r.f. measurements for communications students. Contains practical information on methods. 384 pages, illustrated. Second edition, 1938.....**$4.00**

LABORATORY MANUAL IN RADIO, *by Almstead, Davis, and Stone.* Laboratory experiments for elementary radio courses, including shop practice and circuit recognition, with work sheets. Paper bound, 139 pages, illustrated. 1943..... **$0.80**

EXPERIMENTAL RADIO, *by R. R. Ramsey.* A widely used laboratory manual describing 132 basic experiments designed to bring out the principles of radio theory, instruments and measurements. 196 pages, illustrated. 4th edition, 1937..... **$2.75**

THE CATHODE-RAY TUBE AT WORK, *by John F. Rider.* Cathode-ray tube theory, sweep circuits, a.c. wave patterns, and descriptions of commercial oscilloscope units, including actual photographs of screen patterns. 322 pages, illustrated.....**$3.00**

A GUIDE TO CATHODE-RAY PATTERNS, *by Merwyn Bly.* Types of oscilloscope patterns encountered in practice are shown, with explanations. A section on graphic analysis is included. Paper bound, 39 pages, illustrated. 1943..... **$1.50**

Commercial Equipment and Operating

RADIO OPERATING QUESTIONS AND ANSWERS, *by Nilson and Hornung.* Gives the answers to the paraphrased questions in the FCC study guide, covering all six elements of the commercial examinations. 415 pages, illustrated. 7th edition, 1940.....**$3.00**

PRACTICAL RADIO COMMUNICATION, *by Nilson and Hornung.* Covers basic principles and technical requirements in the commercial fields—broadcasting, police, aviation and marine communication. 927 pages, illustrated. 2nd edition, 1943.....**$6.00**

THE RADIO MANUAL, *by G. E. Sterling.* An excellent practical handbook, invaluable to the commercial and broadcast operator and engineer. Covers principles, methods and apparatus of all phases of radio. 666 pages, illustrated. 2nd edition, 1938.....**$6.00**

Miscellaneous

MATHEMATICS FOR ELECTRICIANS AND RADIOMEN, *by N. M. Cooke.* Furnishes the student with a sound mathematical foundation and shows how to apply this knowledge to practical radio and electrical problems. 604 pages, illustrated. 1942.....**$4.00**

RADIO AS A CAREER, *by J. L. Hornung.* A comprehensive discussion of the opportunities to be found in the various radio fields and the relationship of the radio amateur to these fields. 212 pages. 1940.....**$1.50**

AUDEL'S NEW RADIOMAN'S GUIDE, *by E. P. Anderson.* For one who wants to get a working knowledge of radio. Not an engineering text, but filled with useful information for the practicing radioman. 765 pages, illustrated. 1940.....**$4.00**

GETTING ACQUAINTED WITH RADIO, *by Alfred Morgan.* Gives the average person interested in radio the basic principles of the science. For the neophyte. 285 pages, illustrated. 1940.....**$2.50**

PRINCIPLES AND PRACTICE OF RADIO SERVICING, *by H. J. Hicks.* Receiver circuit fundamentals and their application to general service practice. Covers modern testing equipment and business principles in servicing. 391 pages, illustrated. 1943.....**$3.50**

SERVICING SUPERHETERODYNES, *by John F. Rider.* Theory and practice of superheterodyne receivers, together with adjustment and trouble-shooting data. 278 pages, illustrated.....**$1.00**

THE AMERICAN RADIO RELAY LEAGUE, INC., WEST HARTFORD 7, CONNECTICUT

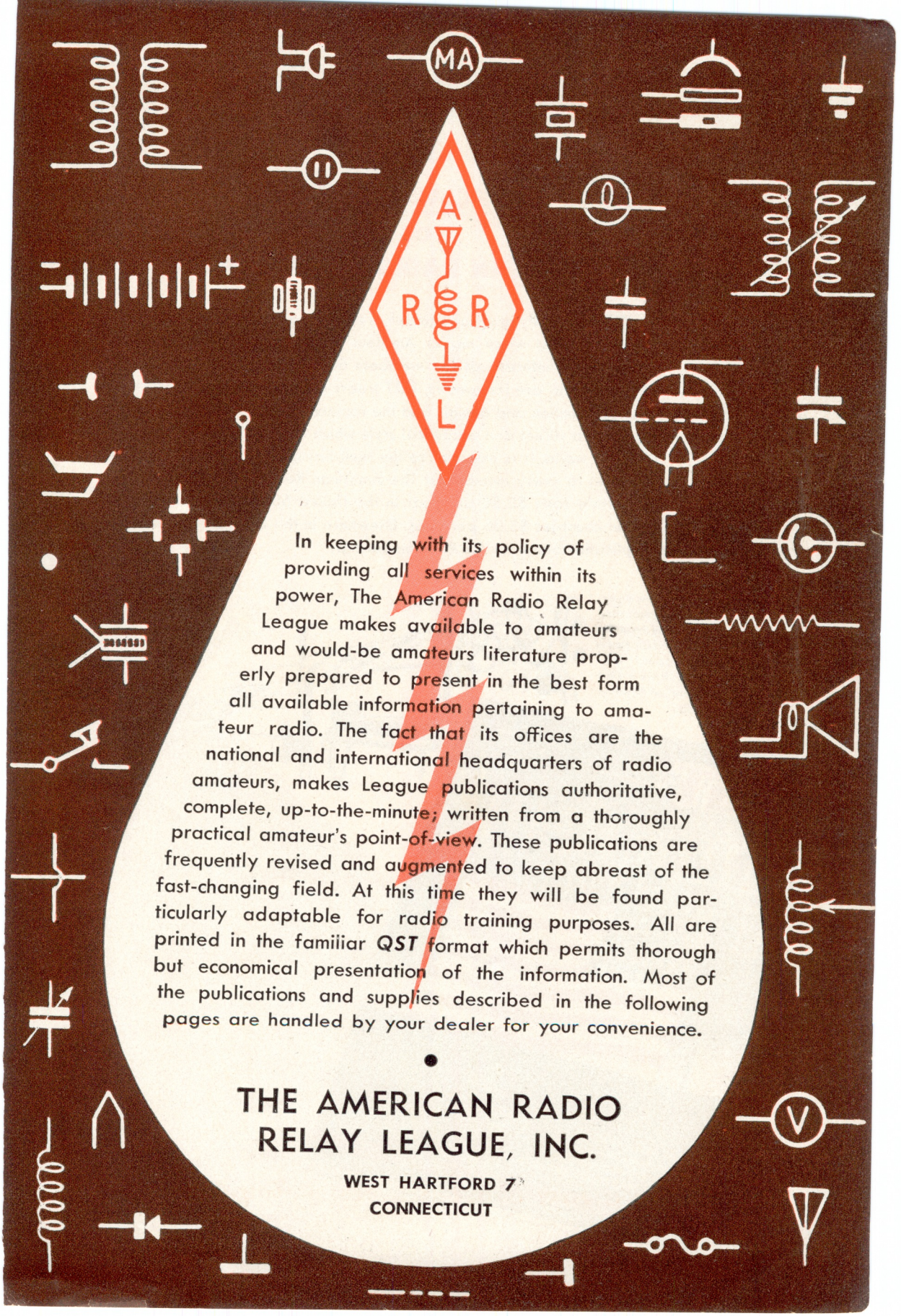

In keeping with its policy of providing all services within its power, The American Radio Relay League makes available to amateurs and would-be amateurs literature properly prepared to present in the best form all available information pertaining to amateur radio. The fact that its offices are the national and international headquarters of radio amateurs, makes League publications authoritative, complete, up-to-the-minute; written from a thoroughly practical amateur's point-of-view. These publications are frequently revised and augmented to keep abreast of the fast-changing field. At this time they will be found particularly adaptable for radio training purposes. All are printed in the familiar ***QST*** format which permits thorough but economical presentation of the information. Most of the publications and supplies described in the following pages are handled by your dealer for your convenience.

•

THE AMERICAN RADIO RELAY LEAGUE, INC.

WEST HARTFORD 7
CONNECTICUT

THE OFFICIAL MAGAZINE OF THE AMERICAN RADIO RELAY LEAGUE

QST faithfully and adequately reports each month the rapid development which makes Amateur Radio so intriguing. Edited in the sole interests of the members of The American Radio Relay League, who are its owners, ***QST*** treats of equipment and practices and construction and design, and the romance which is part of Amateur Radio, in a direct and analytical style which has made ***QST*** famous all over the world. It is essential to the well-being of any radio amateur. ***QST*** goes to every member of The American Radio Relay League and membership costs $2.50 per year in the United States and Possessions. All other countries $3.00 per year. Elsewhere in this book will be found an application blank for A.R.R.L. membership.

For twenty-nine years (and thereby the oldest American radio magazine) ***QST*** has been the "bible" of Amateur Radio.

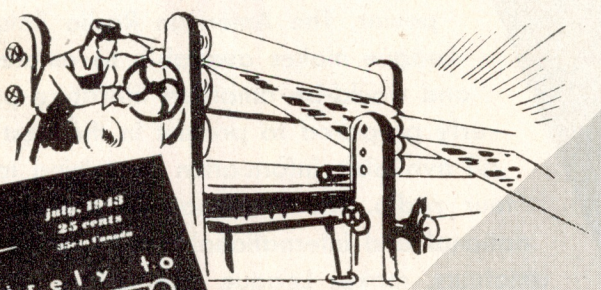

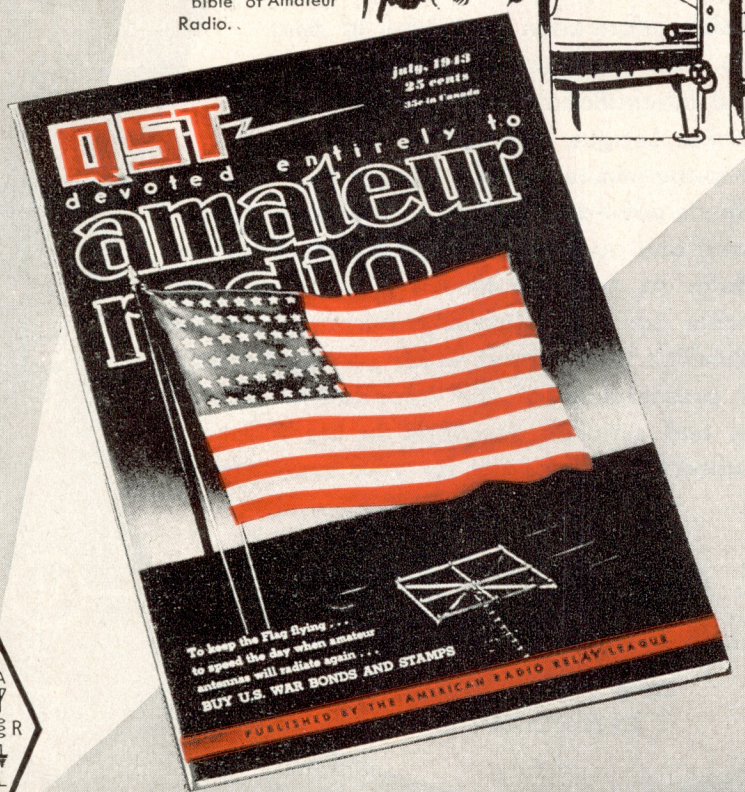

QST
BINDERS

Those who take pride in the appearance of their lay-out and wish to keep their reference file of ***QST***'s in a presentable manner, appreciate the ***QST*** binder. It is stiff-covered, finished in beautiful and practical fabrikoid. Cleverly designed to take each issue as received and hold it firmly without mutilation, it permits removal of any desired issue without disturbing the rest of the file. It accommodates 12 copies of ***QST***. Opens flat at any page of any issue.

With each Binder is furnished a sheet of gold and black gummed labels for years 1922 through 1945. The proper one can be cut from the sheet and pasted in the space provided for it on the back of the binder. The back copies of ***QST*** contain the record of development of modern amateur technique. They are invaluable as technical references. Back copies are generally available—list will be sent upon request.

Binder Price

$1.50 each, postpaid

Available only in U. S. and Possessions

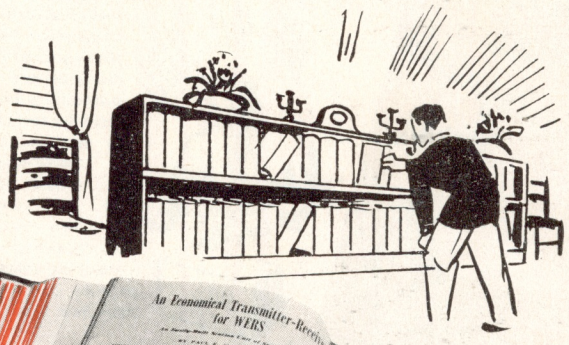

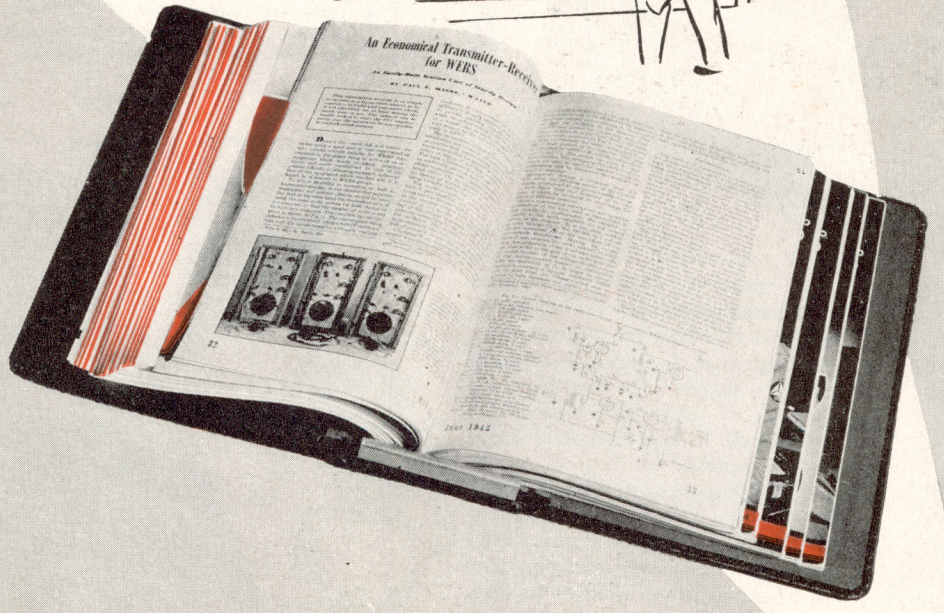



The standard elementary guide for the prospective amateur. Features equipment which, although simple in construction, conforms in every detail to present practices. The apparatus is of a thoroughly practical type capable of giving long and satisfactory service—while at the same time it can be built at a minimum of expense. The design is such that a high degree of flexibility is secured, making the various units fit into the more elaborate station layouts which inevitably result as the amateur progresses. Complete operating instructions and references to sources of detailed information on licensing procedure are given.

25c

Postpaid Anywhere

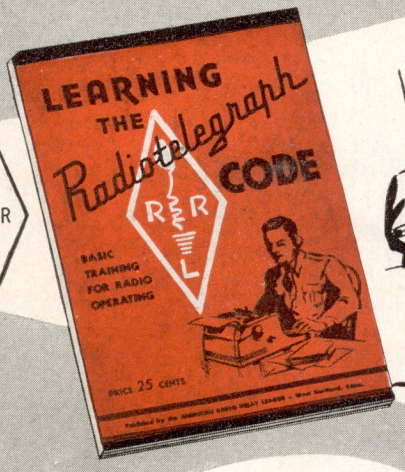

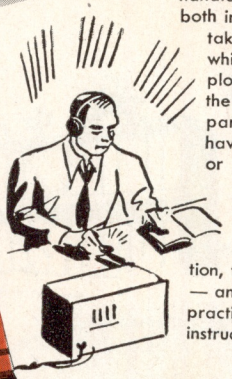

Designed to train students to handle code skillfully and with precision, both in sending and in receiving, this booklet takes first rank among the League's publications which meet today's special training needs. Employing a novel system of code-learning based on the accepted method of *sound* conception, it is particularly excellent for the student who does not have the continuous help of an experienced operator or access to a code machine. It is similarly helpful home-study material for members of code classes. Adequate practice material is included for classwork as well as for home-study. There are also helpful data on high-speed operation, typewriter copy, general operating information — and an entire chapter on tone sources for code practice, including the description of a complete code instruction table with practice oscillator.

25c

Postpaid Anywhere

To obtain an amateur operator's license you must pass a government examination. The License Manual tells how to do that—tells what you must do and how to do it. It makes a simple and comparatively easy task of what otherwise might seem difficult. In addition to a large amount of general information, it contains questions and answers such as are asked in the government examinations. If you know the answers to the questions in this book, you can pass the examination without trouble.

25c

Postpaid Anywhere

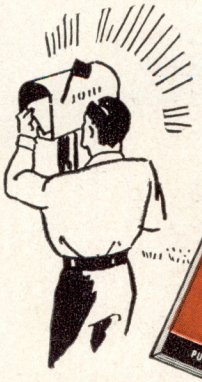

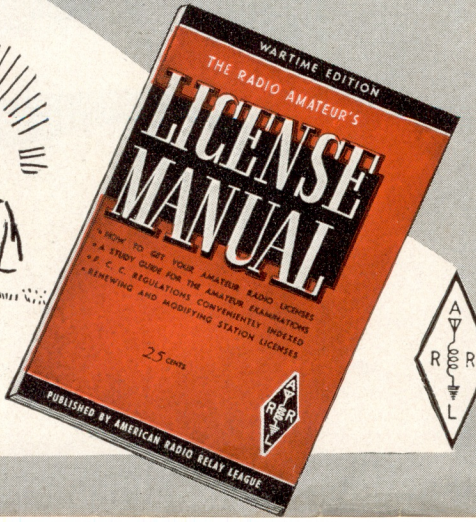





Amateurs are noted for their ingenuity in overcoming by clever means the minor and major obstacles they meet in their pursuit of their chosen hobby. An amateur must be resourceful and a good tinkerer. He must be able to make a small amount of money do a great deal for him. He must frequently be able to utilize the contents of the junk box rather than buy new equipment. Hints and Kinks is a compilation of hundreds of good ideas which amateurs have found helpful. It will return its cost many times in money savings—and it will save hours of time.

50c
Postpaid

A comprehensive manual of antenna design and construction, by the headquarters staff of the American Radio Relay League. Eighteen chapters, profusely illustrated. Both the theory and the practice of all types of antennas used by the amateur, from simple doublets to multi-element rotaries, including long wires, rhomboids, vees, phased systems, u.h.f. systems, etc. Feed systems and their adjustment. Construction of masts, lines and rotating mechanisms. The most comprehensive and reliable information ever published on the subject.



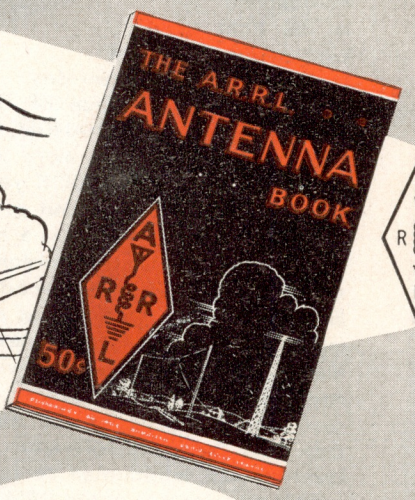

50c
Postpaid

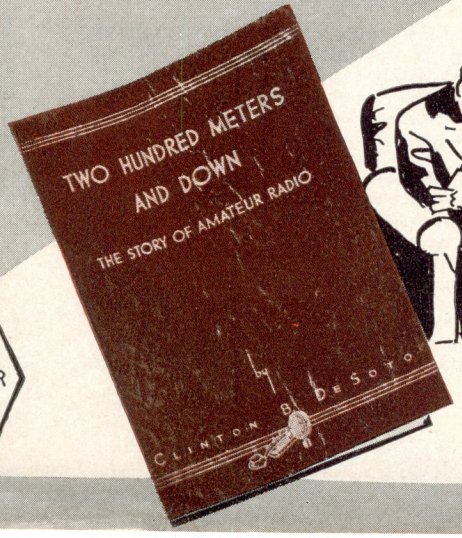



The Story of Amateur Radio, by Clinton B. DeSoto—a detailed, accurate presentation in full book length of all the elements that have served to develop the most unique institution of its kind in the history of the world. A book of history but not a history-book, TWO HUNDRED METERS AND DOWN: The Story of Amateur Radio tells in spirited, dramatic fashion the entire chain of significant events in the development of the art.

Approximately 200 pages, 90,000 words, with durable imitation leather red paper cover

$1.00 ***Postpaid***

Deluxe edition bound in blue cloth

$2.00 ***Postpaid***



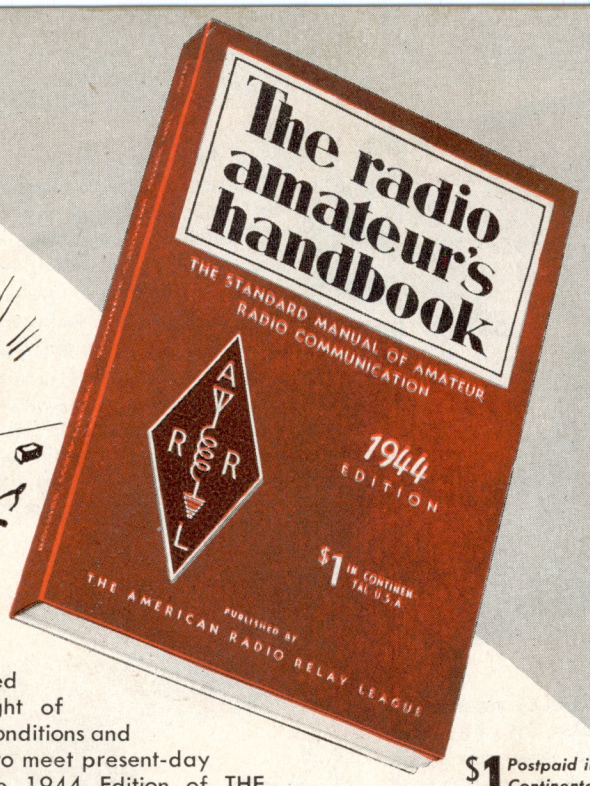

Re-designed in the light of wartime conditions and re-styled to meet present-day needs, the 1944 Edition of THE RADIO AMATEUR'S HANDBOOK contains more pages and more information per page than any HANDBOOK yet published. Greatly expanded, the revised and re-written section on theory and fundamentals is basically the same highly successful treatment that made the HANDBOOK the world's outstanding radio training text. In addition to the established features, the new edition includes an enlarged chapter on the War Emergency Radio Service and an entirely new chapter on carrier-current communication, plus other useful new material—all added without sacrificing any of the essential information in previous editions. Every subject encountered in practical radio communication is covered, arranged for maximum convenience to the reader, sectionalized by topics with abundant cross-referencing and fully indexed. More than ever the ideal reference work, the 1944 edition also contains the practical constructional information on tested and proved gear which has always been the outstanding feature of the HANDBOOK.

$1 *Postpaid in Continental U. S. A.*

$1.50 Postpaid Elsewhere
Buckram Bound $2.00

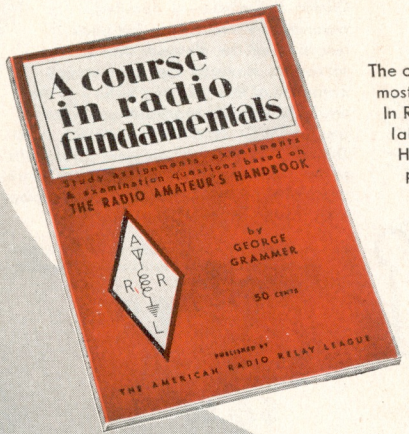

50c

Postpaid Anywhere

The objective in preparing this course was to accent those principles most frequently applied in actual radio communication. "A Course In Radio Fundamentals" is a study guide, examination book and laboratory manual. Its text is based on the "Radio Amateur's Handbook." Either the special edition for war training purposes or the Standard Edition may be used. References contained in the "Course" are identical in both editions. As a text, this book greatly smooths the way for the student of the technicalities of radio. It contains interesting study assignments, experiments and examination questions for either class or individual instruction. It describes in detail 40 experiments with simple apparatus giving a complete practical knowledge of radio theory and design.