RYCOM INSTRUMENTS
Railway Communications Inc
9351 E 59th
Raytown Missouri 64133

NAVELEX 0967-422-2010
R1307A/GR
RADIO RECEIVER

Serial No. _____

Addendum to Manual WO 638-12FD

R1307A/GR

Serial Nos. 779 up:

Tube types changed as follows:

Symbol	Delete	Add Part no.
V3, V12, V13	MIL-E-1B, 12AU7, 5960-166-7663	6189
V5	MIL-E-1B, 5960-188-6589	-
V14	MIL-E-1B, 5960-166-7673	-

TABLE OF CONTENTS

	Paragraph	Page
Chapter I General	1-5	1-3
Scope	1	1
Classification	2	1
Description and Data	3	1
Technical Characteristics	4	1
Additional Equipment	5	3
Chapter II Installation	6-8	4-5
Inspection	6	4
Power Requirements and Distribution	7	4
Initial Adjustments	8	4
Chapter III Operation	9-13	6-11
Operating Controls and Inputs-Outputs	9	6
Calibration	10	7
Measurements	11	8
Demodulation	12	8
FC Operation	13	11
Chapter IV Theory of Operation	14-20	12-16
General	14	12
Input Circuit	15	12
Oscillator-Mixer	16	12
2.215 MC IF Amplifier	17	13
Demodulators	18	14
Audio Amplifier	19	16
Power Supply	20	16
Chapter V Maintenance	21-25	18-64
Introduction	21	18
Trouble Shooting	22	18
Test Procedure	23	18
Alignment Procedure	24	20
Resistance and Voltage Charts	25	25
Identification Table of Parts	--	26

LIST OF ILLUSTRATIONS

Block Diagram	Figure 1	
Schematic Diagram	Figure 2	65

LIST OF ABBREVIATIONS

AC	Alternating Current
AM	Amplitude Modulation
B.A.	Bias Adjust
BFO	Beat Frequency Oscillator
B.W.	Bandwidth
C	Capacitance
CCW	Counterclockwise
CPS (~)	Cycles per Second
CW	Carrier Wave
D	Deep
DB	Decibel
DC	Direct Current
F.C.	Frequency Control
FM	Frequency Modulation
FSK	Frequency Shift Keying
GM	Transconductance
H	High
IF	Intermediate Frequency
J	Connector
K	1000 Ohms
KC	Kilocycle per Second
L	Inductance
LSB	Lower Sideband
MC	Megacycle per Second
MCW	Modulated Carrier Wave
MV	Millivolt
Ω	Ohm
PP	Peak to Peak
SSB	Single Sideband
USB	Upper Sideband
UV	Microvolt
V	Volt
VTVM	Vacuum Tube Voltmeter
W	Wide

CERTIFICATION

The RYCOM Instruments Company certifies that this instrument was thoroughly tested and inspected and found to meet its published specifications when it was shipped from the factory.

WARRANTY AND ASSISTANCE

All RYCOM Instruments Products are warranted against defects in material and workmanship. This warranty applies for one year from the date of delivery, or, in the case of certain major components listed below for the specified period we will repair or replace products that prove to be defective during the warranty period. No other warranty is expressed or implied. We are not liable for consequential damages.

Exceptions in our products using dry batteries or Ni-Cad batteries the above warranty applies to the equipment only. Ni-Cad batteries are subject to original manufacturers inspection.

Where it is necessary to return the instrument to the factory, furnish information to the nature of trouble encountered. Ship prepaid to:

RYCOM INSTRUMENTS
9351 East 59th Street
Raytown, Missouri 64133

Attention: Service Department

R1307A/GR
RADIO RECEIVER
SER. NO.
115 VOLTS
RYCOM
RAILWAY COMMUNICATIONS INC.
FREQUENCY – KILOCYCLES
POWER OFF
CAL
IF
METER OFF
METER
DB VOLTS
VOLTS DB
ATTENUATOR
SELECTIVITY KC
TUNING
B.F.O.
SPEAKER
ON
OFF
AM
LSB
USB
BFO
FM
MONITOR
BFO
CAL 1 LEV
CAL 2 LEV
2KC
FLAT
4KC

CHAPTER I

GENERAL

1. SCOPE.

a. This publication contains chapters on General (Introduction), Installation, Operation, Theory of Operation and Maintenance for the R1307A/GR Radio Receiver.

b. All symbols referred to such as V1,X1 and all controls capitalized such as CAL 1 LEV or METER are used in the schematic drawing and/or marked on the chassis or front panel of the instrument. The R1307A/GR is hereafter referred to as Receiver.

2. CLASSIFICATION. This publication and the equipment to which it refers are UNCLASSIFIED. Caution should be exercised, however, when handling or discussing this equipment since it may be used as part of an overall system which carries a higher classification.

3. DESCRIPTION AND DATA.

a. The Receiver covers the frequency range of 3 KC to 810 KC in five bands. The Receiver circuitry has provisions for demodulating most types of signal: Amplitude modulation detector, product detector and a limiter-frequency discriminator. The local oscillator frequency can be controlled by the application of an external DC voltage.

b. The Receiver is designed for relay rack mounting in a standard 19 inch rack. The Receiver requires 8-3/4 inches of panel space and 16 inches of space behind the panel. Weight of the Receiver is 35 pounds.

c. Input and output connections including primary power are on the rear of the unit. All signals are on type BNC receptacles. The primary power receptacle is a MS3102A-14S-7P receptacle. An 8-foot power cord is supplied with the unit.

d. All operator controls are located on the front panel of the Receiver. A speaker and HEADSET jack on the front panel permit aural monitoring by the operator.

4. TECHNICAL CHARACTERISTICS.

a. Input Characteristics.

(1) Impedance: 3K or greater over entire frequency range (capacitively coupled).
(2) Level: 100uv to 30V.
(3) Frequency Range: 3 KC to 810 KC.
(4) Types of Signal: AM, CW, MCW, SSB, FM and FSK.

Reverse (Page 1) Blank

b. Receiver Characteristics.

(1) IF Center Frequency: 2.215 MC.
(2) IF Selectivities: 1 KC, 2 KC, 4 KC and 8 KC.

(a) Passband ripple: ±1 DB maximum.

(3) Detectors.

(a) AM detector used for amplitude modulation and modulated carrier wave.
(b) Product detector used for single sideband and carrier wave.

1. Injection oscillator control.

a. Crystals for upper sideband and lower sideband.

b. Beat frequency oscillator for carrier wave. BFO adjustable ±7 KC from center IF frequency.

(c) Limiter: Frequency discriminator, used for frequency modulation and frequency shift keying. .9 volts per kilocycle, nominal output.

(4) Local Oscillator.

(a) Thermal stability: ±100 CPS (constant environment one hour warmup).
(b) FC sensitivity: 500 CPS, minimum shift per volt input.
(c) Dial error: ±2 KC maximum. ±500 CPS nominal.

(5) Internally generated harmonics of input signal: nominal -60 DB (0 DB meter reference, with attenuator set 40 DB below input signal).

c. Output Characteristics.

(1) Impedance.

(a) Audio output: 600 ohms.
(b) FM output: 5K ohms or greater.
(c) IF output: 200 ohms or greater.

(2) Level.

(a) Audio output: adjustable, 10 volts maximum.
(b) FM output: 0.9 volt/KC nominal centered at approximately +8V DC.
(c) IF output: 1 volt PP nominal.

Reverse (Page 2) Blank

(3) Frequency Response.

(a) Audio output: determined by IF selectivity switch and audio bandwidth switch (2 KC, 6 KC and Flat).
(b) FM output: dc coupled, determined by IF selectivity.
(c) IF output: centered at 2.215 MC and determined by IF selectivity.

(4) Signal to noise ratio: 36 DB nominal measured at IF output J7 with 4 KC selectivity and MONITOR in AM position.

d. Mechanical Characteristics.

(1) Size: 19"W, 15"D and 8-3/4"H.
(2) Weight: 35 pounds.
(3) Mounting: 19 inch relay rack.

e. Power Requirements.

(1) Voltage: 98 to 130V AC 48 to 62 CPS, single phase.
(2) Current: 0.6 amps.

5. ADDITIONAL EQUIPMENT. The following test equipment is required to test and align the Receiver and is not supplied.

a. Sweep Generator and Display Unit. Use to align IF amplifier and crystal filters.

(1) Center frequency between 50 KC and 500 KC.
(2) Sweep width variable from 5 KC to 40 KC.
(3) Sweep rate 1 to 4 per second.

b. VTVM. (Triplett 850 or equivalent).

c. Counter.

(1) Minimum counting rate 3 MC.
(2) Gate time 1 second and .01 second.
(3) Display time variable.

d. Signal Generator. (Measurements Corp 65-B or equivalent).

e. AC-VTVM. (Hewlett-Packard 400L or equivalent).

Reverse (Page 3) Blank

CHAPTER II

INSTALLATION

6. INSPECTION. The Receiver has been thoroughly tested and inspected before shipment. After unpacking it should be inspected for shipping damage such as external dents, scratches, bent or broken controls and receptacles. The dust cover should be removed and the unit checked for internal loose or damaged parts. All instances of damage must be logged and reported to the officer in charge of the installation.

7. POWER REQUIREMENTS AND DISTRIBUTION. The power source for satisfactory operation is 115V AC 50/60 CPS. A variation (98 to 130V and 48 to 62 CPS) may be tolerated without appreciable effect on the equipment.

8. INITIAL ADJUSTMENT. After the Receiver has been unpacked and inspected, plug into the proper 115V AC receptacle. Turn "ON" with the METER switch and allow to warm up. After five minute warm up, perform the following tests.

a. Preliminary Settings. Set controls listed in the following table to designated position.

METER switch - CAL
SELECTIVITY KC - 1
BAND SELECTOR - B or C
MONITOR - AM
ATTENUATOR - CAL
MONITOR LEVEL - Clockwise
BFO - 0
SPEAKER - ON
AUDIO B.W. - FLAT

b. Procedure.

(1) Tune Receiver for a maximum meter indication at approximately CAL (250 KC).

(2) Adjust CAL 1 LEV for a 0 DB meter reading. Noise should be audible at speaker.

(3) Tune Receiver until meter indicates -10 DB. Switch SELECTIVITY to 2 KC. Meter indication should return to approximately 0 DB.

(4) Tune Receiver until meter indicates -10 DB. Switch SELECTIVITY to 4 KC. Meter indication should return to approximately 0 DB.

(5) Tune Receiver until meter indicates -10 DB. Switch SELECTIVITY to 8 KC. Meter indication should return to approximately -2 DB.

(6) Set MONITOR LEVEL to 50% rotation. Set MONITOR to LSB. An audio tone should be on the monitor.

Reverse (Page 4) Blank

(7) Set MONITOR to USB. Audio level should not change, audio frequency should change.

(8) Set MONITOR to BFO. Rotate BFO control. Audio tone should change in frequency when the BFO control is rotated.

(9) Set MONITOR to FM. Set MONITOR LEVEL to clockwise position. Audio output should be "quiet." Set ATTENUATOR to +30 DB. Audio output should become "noisy."

(10) The above tests indicate the Receiver is in electrically operating condition, may be placed in rack and connected to interconnect cables.

Reverse (Page 5) Blank

CHAPTER III

OPERATION

9. OPERATING CONTROLS AND INPUTS-OUTPUTS.

	Control	Function
a.	AUDIO B.W.	Determines audio "roll off" frequency ---2 KC, 6 KC or FLAT.
b.	ATTENUATOR	Controls input level to receiver in 10 DB steps. Feeds output of the calibrate oscillator into the "front end" in CAL position.
c.	B.A.	Adjust bias on voltage variable capacitors Vc1 and Vc2.
d.	BAND SELECTOR	Determines operating frequency of the Receiver in conjunction with the TUNING.
e.	BFO	Controls frequency of the BFO when it is in use.
f.	CAL 1 LEV	Determines gain of the Receiver by adjusting of the IF gain.
g.	CAL 2	Sets calibrate frequency level.
h.	METER	Place short across meter in METER OFF position. Read average output of IF amplifier in IF position. Turn on calibrate oscillator and read average output of IF in CAL 1 and CAL 2 positions. Turn AC power off in POWER OFF position.
i.	SPEAKER	Turns speaker ON or OFF.
j.	MONITOR LEVEL	Controls audio amplifier gain.
k.	SELECTIVITY KC	Determines IF passband of Receiver--- 1, 2, 4 or 8 KC.
l.	MONITOR AM, LSB, USB, BFO, FM	Determines type of detection the Receiver will perform. Feeds detected signal to the audio amplifier.
m.	TUNING	Determines operating frequency of the Receiver in conjunction with the BAND SELECTOR.

Reverse (Page 6) Blank

	Receptacle or Jack	Type	Function
n.	INPUT J1	BNC	Signal input.
o.	IF OUTPUT J7	BNC	2.215 MC IF output, 1 volt PP.
p.	FM OUTPUT J6	BNC	DC coupled FM detector output centered at approximately +7V DC.
q.	AUDIO OUTPUT J8	BNC	600Ω audio output.
r.	F.C. J5	BNC	FC input.
s.	HEADSET J9	PHONE	Standard headset, output.
	Indicating Devices		Function
t.	METER		Reading indicates proper ATTENUATOR setting for best demodulation.

10. CALIBRATION (Level and Frequency). Calibration of the Receiver is performed to set the level or gain of the Receiver and check the frequency calibration. (The level calibration of the unit is performed at 250 KC). The frequency check points are every 250 KC and "0" frequency on Band A).

a. Preliminary Settings. Set controls listed in the following table to designated position.

METER switch - CAL 1
ATTENUATOR - CAL
SELECTIVITY KC - 1
BAND SELECTOR - B or C
MONITOR - BFO
BFO - 0
MONITOR LEVEL - 50% ROTATION
SPEAKER - ON
AUDIO B.W. - FLAT

b. Procedure.

(1) Adjust TUNING at CAL (250 KC) until meter reads maximum. Adjust TUNING so the signal is in the approximate center of the 1 KC passband. Adjust BFO until audio output indicates a "zero beat." If necessary loosen the screw holding the BFO knob to the shaft and rotate the knob to align it with the "0" on the panel. Tighten screw. Set CAL 1 LEV for a 0 DB meter reading.

(2) Frequency may be checked on other bands by tuning to harmonics of 250 KC and listening for an audio "zero beat." (It may be checked on Band A by tuning to "0" frequency).

11. MEASUREMENTS (Level and Frequency). The Receiver may be used to measure frequencies and levels of discreet signals spaced more than 1.5 KC apart.

a. Preliminary Settings. Set controls listed in the following table to designated position.

METER switch - IF
SELECTIVITY KC - 1
MONITOR - AM
SPEAKER - ON
MONITOR LEVEL - 50% ROTATION
AUDIO B.W. - FLAT

b. Procedure.

(1) Receiver should be calibrated according to Paragraph 10 before a series of level measurements are made.

(2) Set ATTENUATOR to the lowest level signal to be measured. Adjust TUNING and BAND SELECTOR until meter is deflected.

(3) Adjust TUNING for maximum meter indication while increasing attenuation of ATTENUATOR. Final adjustment should reflect an indication of between +2 DB and -8 DB on DB meter scale.

(4) The level of the tuned signal is determined by the algebraic sum of meter indication and the ATTENUATOR setting. The frequency is determined by the TUNING pointer and BAND SELECTOR. If the audio output is noise, the signal is a single frequency and does not have amplitude modulation under 500 CPS. Higher modulation frequencies can be checked for by using a wider selectivity. FM can be checked for by using the FM monitor position

12. DEMODULATION. To achieve full use of Receiver, the types of modulation to be demodulated must be understood. The Receiver is equipped with three types of demodulators. 1) peak envelope detector. 2) product detector. 3) limiter-frequency discriminator. Use of the detectors will demodulate Amplitude Modulation (AM); Modulated Carrier Wave; single sideband; either lower sideband (LSB) or upper sideband (USB); carrier wave; Frequency Modulation (FM) and Frequency Shift Keying. The procedures to adjust the Receiver to perform the above demodulations are as follows.

a. AM (Amplitude Modulation) or MCW (Modulated Carrier Wave).

(1) Preliminary Settings. Set controls listed in the following table to designated positions.

METER switch - IF
MONITOR - BFO
SPEAKER - ON
MONITOR LEVEL - 50% ROTATION
AUDIO B.W. - 6 KC

(2) Procedure.

(a) Receiver should be calibrated daily according to Paragraph 10. Set BFO to zero position according to Paragraph 10. Set SELECTIVITY KC to desired bandwidth or 8 KC. Set ATTENUATOR to approximate level of signal to be demodulated or the noise base of spectrum. Set BAND SELECTOR to appropriate frequency range.

(b) Adjust TUNING to frequency to be demodulated. Simultaneously increase attenuation by turning ATTENUATOR clockwise until a maximum on scale meter reading is reached. This maximum should read between -8 DB and +2 DB on DB meter.

(c) Listen to audio output and zero beat BFO with carrier. Switch MONITOR to AM. If modulation is narrow, frequency wise, the selectivity and audio bandwidth of the unit may be decreased.

b. SSB (Single Sideband). The procedure for demodulating either upper or lower sideband are identical except the upper sideband is demodulated with the MONITOR switch in USB. The lower sideband is demodulated with the MONITOR switch in LSB.

(1) Preliminary Settings. Set controls listed in the following table to designated positions.

METER switch - IF
MONITOR - LSB or USB
SPEAKER - ON
MONITOR LEVEL - 50% ROTATION
SELECTIVITY KC - 4
AUDIO B.W. - 6 KC

(2) Procedure.

(a) Receiver should be calibrated daily according to Paragraph 10.

(b) Set ATTENUATOR to approximate level of signal to be demodulated or the noise base of the spectrum. Set BAND SELECTOR to appropriate frequency range.
Adjust TUNING to frequency to be demodulated. Simultaneously increase attenuation by turning ATTENUATOR clockwise and adjust TUNING until a maximum on scale meter reading is reached.
This maximum should read between -8 DB and +2 DB on DB meter.

(c) Listen to audio output, adjusting TUNING for best demodulation characteristics.
Upper sideband will give best demodulation characteristics when the TUNING is set to the lower frequency edge of the channel being demodulated. Lower sideband to the upper frequency edge.

c. CW (Carrier Wave).

(1) Preliminary Settings. Set controls listed in table on following page to designated positions.

Reverse (Page 9) Blank

METER switch - IF
MONITOR - BFO
SPEAKER - ON
MONITOR LEVEL - 50% ROTATION
SELECTIVITY KC - 1
AUDIO B.W. - 2 KC

(2) Procedure.

(a) Receiver should be calibrated daily according to Paragraph 10. Set BFO to zero according to Paragraph 10.

(b) Set ATTENUATOR to approximate level of signal to be demodulated or the noise base of the spectrum. Set BAND SELECTOR to appropriate frequency range.
Adjust TUNING to frequency to be demodulated. Simultaneously increase attenuation by turning ATTENUATOR clockwise until a maximum, on scale, meter reading is reached. Zero beat BFO with signal. The maximum should read -8 DB and +2 DB on DB meter (Note: the meter will be pulsating).

(c) Adjust the BFO to desired audio tone.

d. FM (Frequency Modulation).

(1) Preliminary Settings. Set controls listed in the following table to designated position.

METER switch - IF
MONITOR - FM
SPEAKER - ON
MONITOR LEVEL - 50% ROTATION
SELECTIVITY KC - 8

(2) Procedure.

(a) Receiver should be calibrated daily according to Paragraph 10.

(b) Set ATTENUATOR to approximate level of signal to be demodulated or the noise base of the spectrum.
Set BAND SELECTOR to appropriate frequency range. Adjust TUNING to frequency to be demodulated. Simultaneously increase attenuation by turning ATTENUATOR clockwise until a maximum, on scale, reading is reached. The maximum should read between -8 DB and +2 DB on DB meter. Turn ATTENUATOR CCW one position.

(c) Readjust TUNING for "cleanest" output. An external FM output may be obtained from the audio output J8 or the FM output J6.

e. FSK (Frequency Shift Keying).

(1) Preliminary Settings. Set controls listed in table on following page to designated positions.

METER switch - IF
MONITOR - BFO
SPEAKER - ON
SELECTIVITY KC - 2
MONITOR LEVEL - 50% ROTATION
AUDIO B.W. - 6 KC

(2) Procedure.

(a) Receiver should be calibrated daily according to Paragraph 10. Set BFO to zero according to Paragraph 10.

(b) Set ATTENUATOR to approximate level of signal to be demodulated or the noise base of the spectrum. Set BAND SELECTOR to appropriate frequency range. Adjust TUNING to frequency to be demodulated. Simultaneously increase attenuation by turning ATTENUATOR clockwise until a maximum, on scale, reading is reached. The maximum should read between -8 DB and +2 DB on DB meter. Turn ATTENUATOR CCW one position.

(c) Adjust the TUNING until a nearly continuous tone is heard. The selectivity may be reduced if it does not affect the continuous tone.

(d) The FM output, J6, will be a low level keyed DC FSK signal.

(e) Adjust the BFO to obtain two audio output frequencies in the desired part of the audio spectrum. The audio output is available at J8.

13. FC (FREQUENCY CONTROL) OPERATION.

a. Preliminary Settings.

None.

b. Procedure.

(1) The equipment to control the frequency of the Receiver should have a residual output of +15V DC. This should be fed into the FC receptacle J5.

(2) With no controlling voltage out of the control unit, adjust the B.A. potentiometer (R203) on the front panel so there is no frequency change of the Receiver when the control unit is connected. (This can be determined by listening to the calibrate signal of 250 KC on LSB or USB).

CHAPTER IV

THEORY OF OPERATION

14. GENERAL. The Receiver is broken down into six sections: 1) Input Circuit. 2) IF Amplifier. 3) Demodulators. 4) Audio Amplifier. 5) Oscillator-mixer. 6) Power Supply. These sections are further broken down into functional circuits (see Block Diagram, Figure 1). The descriptions in this chapter follow the block diagram of Figure 1 and the schematic of Figure 2.

15. INPUT CIRCUIT. The input circuit is the broad band portion of the Receiver and operates over the frequency range 3 KC to 810 KC. This section consists of the input jack, lowpass filter, attenuator and video amplifier.

a. Lowpass Filter. The input signal at the input jack J1 is fed to the lowpass filter FL5 through DC blocking capacitor C1. The output impedance of the filter is 6K. The cutoff frequency of the filter is 900 KC. The filter is a 6 pole Tchebycheff design, with a series L input and shunt C output.

b. Attenuator. The input signal from the lowpass filter is fed into the attenuator. The function of the attenuator is to set the proper level to drive the mixer for minimum distortion and noise. The input impedance of the attenuator is 6K. The attenuator uses both voltage dividing and L networks to achieve its broad band attenuation characteristics and has 100 DB range. The output of the attenuator drives the Video Amplifier V1. In the CAL position the attenuator disconnects the input signal from V1 and replaces it by a controlled level 250 KC signal from the calibration oscillator Q2. This signal is used to maintain a constant IF gain and check the dial accuracy every 250 KC.

c. Calibrate Oscillator. The Calibrate Oscillator is a 250 KC transistorized Pierce oscillator. The feedback circuit is isolated from the collector of Q2 by R56. This allows the collector voltage of Q2 to swing between the supply voltage and ground. The output closely resembles a square wave. The transistor supply voltage is held constant by zener diode CR5. The 250 KC output of Q2 is fed to the attenuator in CAL position. It is used to calibrate the Receiver for level and to check the Receiver for dial accuracy.

d. Video Amplifier. The video amplifier V1 is direct coupled from the attenuator. The video amplifier is a cathode follower which acts as a broad band constant impedance driver for the mixer.

16. OSCILLATOR-MIXER. This section consists of a Mixer, Phase Splitter, Local Oscillator, Frequency Control devices and a +75 volt regulator. The purpose of this section of the Receiver is to convert

an incoming signal to 2.215 MC so it may be amplified and demodulated. When the Receiver is tuned to a frequency, the following equation applies. LOCAL OSCILLATOR FREQUENCY = TUNED FREQUENCY +2.215 MC.

a. Mixer. The input signal is heterodyned (mixed) with the local oscillator injection in mixer diodes CR6. The mixer diodes operate as a balanced shunt mixer and short the signal to ground during half the local oscillator cycle. The output of the mixer is direct coupled to the grid of the mixer amplifier V2.

b. Phase Splitter. The phase splitter V3a drives the mixer diodes into conduction during half the local oscillator cycle. Conduction occurs when the signal on the plate of V3a is negative and the signal on the cathode of V3a is positive. The local oscillator signal level at the junction of the mixer diodes is very small because of the matching of the diodes. The drive to the phase splitter is obtained from the local oscillator through the capacity divider composed of C58 and C59.

c. Local Oscillator. The local oscillator V3b is of the Hartley type in a grounded plate configuration. The frequency of the oscillator within each band is varied by C65. The BAND SELECTOR S1 determines the operating band. Capacitors C66 and C67 are temperature compensated and determine the thermal stability of the oscillator. The frequency of the local oscillator can be externally controlled by a DC voltage applied to J6.

d. Frequency Control. Voltage variable capacitors Vc1 and Vc2 are used to control the frequency of the local oscillator for small local oscillator frequency changes. Vc1 remains in the circuit continuously while Vc2 is switched out between band D and C. An initial bias of +15V DC appears on the diodes and is adjusted to this value by B.A. R203. This initial bias also appears at the F.C. (Frequency Control) jack J6.

e. +75V DC Regulator. A +75V DC regulated voltage is obtained by dropping resistor R63 and zener diode CR7 from the +160 volt line. This voltage is used by the local oscillator V3b.

17. 2.215 MC IF AMPLIFIER. This section consists of a mixer amplifier, crystal filters, three IF stages and an IF buffer.

a. Mixer Amplifier. The grid of mixer amplifier V2 is direct coupled from the mixer. V2 supplies approximately 20 DB of gain to the input signal which has been converted to 2.215 MC. The output of the mixer amplifier is fed to switch S2b.

b. Crystal Filters. The Receiver contains four IF selectivities which is determined by one of four crystal filters selected by S2. The center frequency of all the filters is 2.215 MC and the

bandwidths are 1 KC, 2 KC, 4 KC and 8 KC. The input and output impedance of the filters is 560Ω. Tuning capacitors C6 through C13 tune the filters for maximum flatness. The outputs of the filters are switched by S2a.

c. IF Amplifiers. The crystal filter outputs, as switched by S2a feed the grid of the 1st amplifier V4. The 1st, 2nd and 3rd IF amplifiers (V4,V5,V6) are coupled from plate to grid by double tuned transformers.

The 2nd amplifier gain is controlled by CAL 1 LEV R201 in the cathode circuit. CAL 1 LEV adjusts the plate current of V5 which varies the transconductance (GM) of the tube.

The 3rd amplifier V6 output is coupled by the double tuned transformer T3 to all demodulators.

d. IF Buffer. The IF buffer V7 is driven from the primary tap of T3 through the divider consisting of R22 and R23. The IF buffer is a cathode follower. Its output is capacitive coupled to the IF OUT jack J7.

18. DEMODULATORS. This section describes the three demodulators incorporated in the Receiver. 1) AM detector. 2) Product detector. 3) FM detector. Using the demodulators of the Receiver the following signals can be demodulated. AM, MCW, CW, LSB, USB, FM and FSK (see Chapter 3, Operation).

a. AM-Meter Detector. The AM-Meter Detector diode CR1 is used as a peak envelope detector. The drive is obtained from the primary tap of T3. The output is fed through S4a to the audio amplifier with the MONITOR in AM position. The detected output is also fed through a lowpass filter consisting of R24 and C28 to the meter M1. The meter responds to the average DC level out of the detector diode. R25 is a meter damping resistor.

b. Product Detector. The product detector V9 is a beam deflection tube. The total cathode current is determined by the voltages applied to grids 1 and 2. When the voltage difference between the two deflecting electrodes is zero the cathode current is split between the plates of V9. If a signal is applied to one of the deflection plates (pin 9) the cathode current beam is shifted back and forth between the two plates at the signal rate. If the cathode current beam is being modulated simultaneously by an oscillator connected to grid 1, the output of the tube appearing on the plates will be an almost perfect frequency difference. The AM rejection of this type detector is 40 DB. The signal input to the product detector is from the primary of T3 through a divider consisting of R26 and R27. The carrier injection to the product detector is from the SSB and BF oscillator V11. The output is fed to the audio amplifier when MONITOR is in BFO, LSB or USB.

(1) SSB and BF Oscillator. The SSB and BF Oscillator V11 is crystal controlled for LSB and USB operation and LC controlled for BFO operation. The crystal oscillators are of the Pierce type in a ground plate configuration. The LC oscillator is a Clapp type in a grounded plate configuration. The oscillator supplies injection signal to the product detector V9 for LSB, USB and BFO demodulation.

c. FM Detector. The FM detector consists of a two-section limiter, an amplifier, a discriminator and a discriminator buffer. The FM is fed to the audio amplifier with the MONITOR in FM.

(1) Limiter. The Limiter is made up of two sections. 1) A grid limiting neutralized triode amplifier V8a and 2) A diode clipper CR3 and CR4. The triode is neutralized to obtain maximum stable gain. The purpose of the limiter neutralized triode amplifier and diode clipper is to reduce the noise on the FM discriminator output and hold the FM discriminator output constant for changes in input level. The secondary of T3 supplies drive to V8a. Capacitors C33, C24 and C31 plus the interelectrode capacities of the tube form a bridge neutralizing circuit.

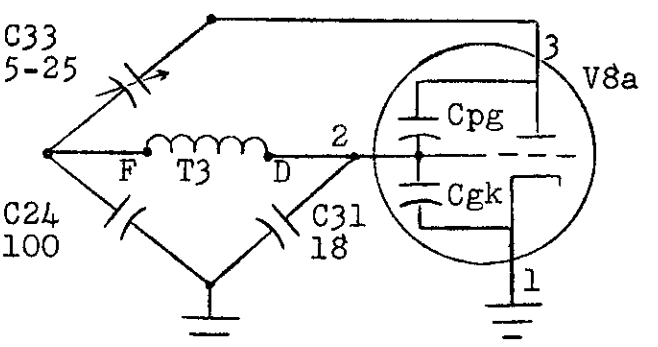

The output of the triode is fed to the diode clipper CR3, CR4. The clipping level of diode CR3 is approximately .5 volts. The clipping level of diode CR4 is set by R31 and R32 and is approximately 5V. If the level is increased beyond the clipping points of the diodes, the triode with CR2 from grid to cathode will grid limit. This two-stage limiter will operate from a -15 DB meter reading to 30 DB of overdrive. The output of the clippers is fed to the amplifier V8b.

(2) Amplifier. The Amplifier to drive the crystal discriminator FL6 is V8b, a pentode. The amplifier receives its drive from the clipper, through the divider R33 and R34. The output is a tuned circuit to eliminate harmonics. The output is fed to the crystal discriminator FL6.

(3) Discriminator. The crystal Discriminator FL6 produces a change in DC output as frequency into it, is changed. A curve showing an approximate output versus frequency into the crystal discriminator is shown below. The output of the discriminator drives the buffer.

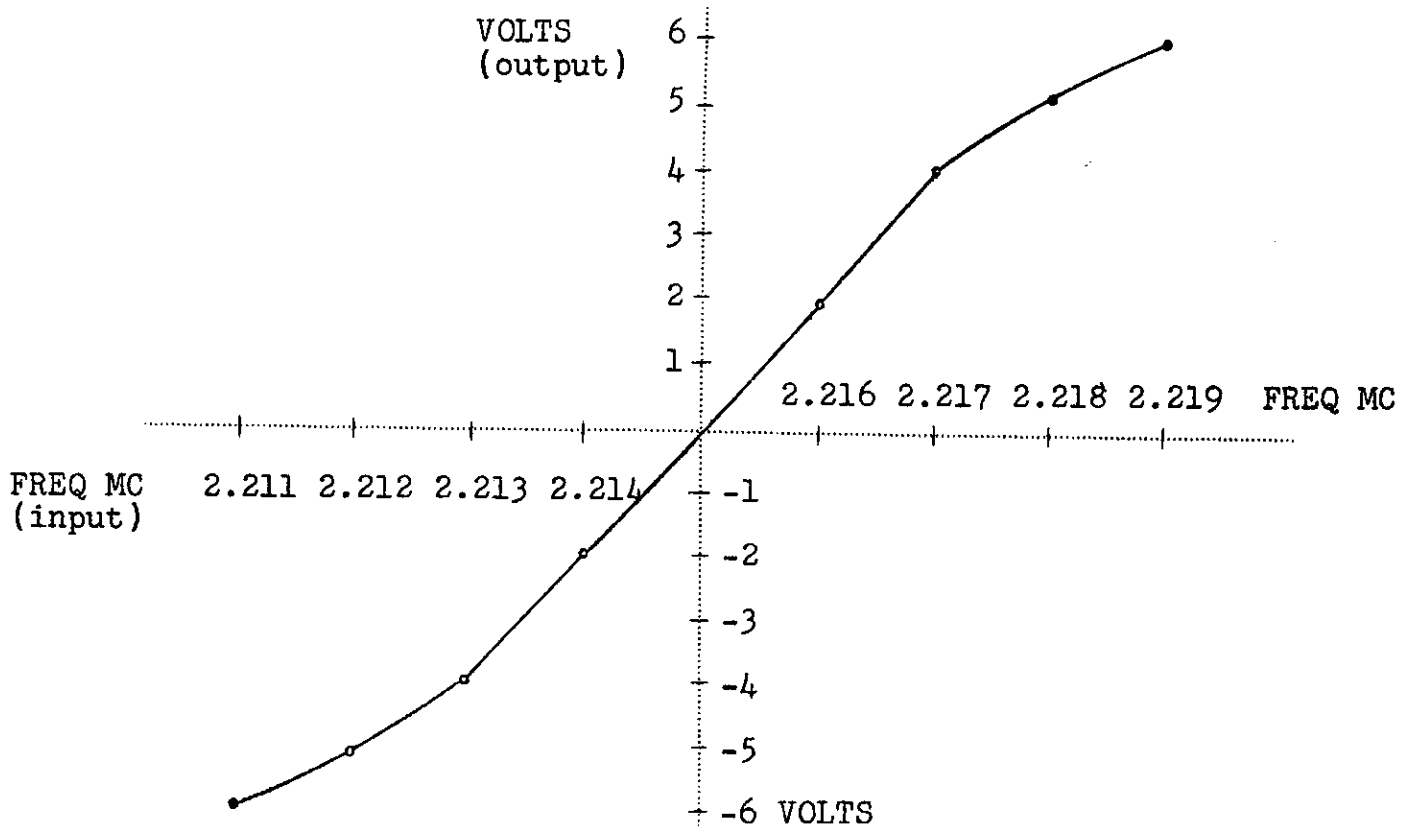

(4) Discriminator Buffer. The Discriminator Buffer V12 is a dual triode cathode follower with a transistor as a constant current cathode resistor. With 0 volts into the buffer approximately +8V DC appears on the cathode. A transistor is used as a cathode resistor to reduce the shift of cathode voltage with DC load changes. The output of the buffer discriminator is fed to the FM OUT jack J5 and the MONITOR switch S4.

19. AUDIO AMPLIFIER. The Audio Amplifier consists of a voltage amplifier, phase splitter and push-pull output stage.

a. Voltage Amplifier and Phase Splitter. The Voltage Amplifier ½V13 is a triode amplifier. The drive is obtained from MONITOR LEVEL potentiometer R204 through the MONITOR switch S4a. The output of the voltage amplifier drives the phase splitter. The Phase Splitter ½V13 is a triode. The AC plate and cathode loads R78 and R76 are the same value. There is an AC bypassed resistor R79 in the cathode which is the DC bias resistor only. The grid return is to bottom of R79.

b. Audio Output. The Audio Output is a push-pull class AB amplifier consisting of V14 and V15. The output of V14 and V15 is transformer coupled to the speaker, the HEADSET jack J9 and the AUDIO OUT jack J8.

20. POWER SUPPLY. The power supply section of the Receiver consists of a RF power line filter, transformer, rectifier, filter, regulator, reference and amplifier. The regulator, reference and amplifier form an active regulator loop.

a. RF Power Line Filter, Transformer, Rectifier and Filter. The nominal 115V input is fed through the RF Power Line Filter to the transformer. It is fused in the primary by F1. There are two secondaries on T3, a 6.3V and a 300V. The 6.3 volt winding supplies filament power to all tubes. The 300 volt winding is rectified by CR8, an encapsulated silicon bridge rectifier. The rectified output is then filtered and fed to the regulator tube V18.

b. Regulator, Reference and Amplifier. The amplifier V16 controls the regulator tube V18 output by comparing V18 output to the reference tube V17 output. V18 output is applied to the voltage divider R98, R205 and R97. The divider output on the arm of the potentiometer R205 is applied to the grid of V16. V17 output of +75 volts is applied to the cathode of V16. The difference of the voltage on V16 grid and cathode is amplified by V16 and applied to the grid of V18 to control its cathode output. Potentiometer R205 is adjusted for +160 volts output of V18 cathode circuit.

The +75V from V17 is also used to supply bias to the frequency control diodes Vc1 and Vc2.

Reverse (Page 17) Blank

CHAPTER V

MAINTENANCE

21. INTRODUCTION. This equipment should give comparatively trouble free performance provided normal operating procedures are observed. In the event of loss of output from the Receiver, the trouble will generally be loss of input, incorrect tuning or excessive noise. Before internal trouble shooting is begun, check to insure that all external connections to the Receiver are made and that an input signal is present. In most instances, if trouble does exist, it will be a bad vacuum tube.

22. TROUBLE SHOOTING. Before attempting to trouble shoot the Receiver, Chapter IV "Theory of Operation" should be studied. The following steps should be performed for trouble shooting the Receiver.

a. Check for low quality or non-existent input signal.

b. Check input and output connections.

c. Measure filament voltage and regulated +160V DC supply.

Observe all tubes and touch all nuvistors to insure filaments are operating.

d. Localize malfunctioning circuits by following "Test Procedure" Paragraph 23.

e. Check and replace tubes in malfunctioning circuits as required. If this fails to remedy the malfunction, voltage and resistance measurements should be performed. (See Paragraph 25 for voltage and resistance charts).

f. If a tube or component is replaced in a circuit that is covered in the "Alignment Procedure" Paragraph 24, check to insure the circuit is properly aligned.

23. TEST PROCEDURE. Perform the following tests in sequence. If a Receiver does not respond properly to the test for a particular group of circuits, a circuit of the group is at fault.

Circuit Being Tested	Tests
a. Power Supply	Regulated 160V DC voltage 158 to 160. AC ripple less than 10 mv. Filaments 6.0 to 6.5 with 115V input line.

b. Input circuit, osc- mixer IF Amplifier, AM-Meter Detector and Audio Amplifier.	Set input SELECTIVITY to 4 KC and MONITOR to AM. Put a 250 KC signal at .78 volts RMS into IN jack J1 and tune Receiver to input signal with ATTENUATOR at 0 DB. METER should read zero DB by adjusting CAL 1 LEV. Noise should be heard with 50% MONITOR LEVEL setting. If audio noise is present and meter does not read, proceed to f.)
c. Calibrate oscillator.	Place meter switch in CAL position and tune Receiver to 250 KC. Meter should read approximately 0 DB.
d. Product detector, FM discriminator and audio amplifier.	With Receiver tuned to calibrate signal switch MONITOR to LSB, USB and BFO. A tone should be heard on speaker. With MONITOR LEVEL turned fully clockwise and the speaker OFF, the tone level at AUDIO OUT jack J8, terminated in 600 ohms, should be between 15V AC and 30V AC. Measure DC level at FM output jack and adjust TUNING of Receiver. DC voltage should vary with TUNING around approximately +8V.
e. Crystal filters.	Tune to calibrate signal with 1 KC SELECTIVITY. The level of the meter reading in 2 KC and 4 KC should remain approximately the same. In the 8 KC position the reading should decrease 2 to 4 DB.
f. IF Amplifier and AM-Meter detector.	Place a 47Ω resistor from the output terminal to ground on the crystal filter assembly. Note: Output terminal is located above SELECTIVITY switch shaft. Connect the signal generator across the 47Ω resistor. Adjust signal generator frequency to 2.215 MC and adjust generator level for a 0 DB meter reading. The output of the signal generator should be between 150 UV and 300 UV.
g. Input circuit and osc-mixer.	If the above tests are all satisfactory, it indicates that the malfunction is in the Input circuit or osc-mixer.

Reverse (Page 19) Blank

24. ALIGNMENT PROCEDURE. The Receiver has been aligned at the factory and should not be realigned as a routine maintenance procedure.

a. IF Amplifier Adjustment. Alignment of the IF transformers should not be attempted without using a sweep "set up."

(1) Test Set Up.

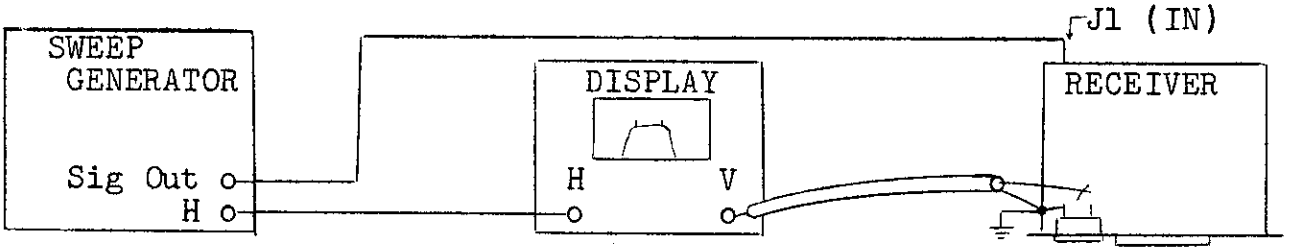

(2) Preliminary Adjustments. Disconnect the lead with violet insulation which is normally connected to the meter terminal and connect to the vertical deflection of the display unit (see test set up).

Connect the test set up as shown above.

Remove the crystal filter wiring cover.

Place a 27 to 47Ω resistor on the output terminal of the crystal filter wiring box to ground.

Connect a shorting wire from the input to the output terminals of the 8 KC crystal filter FL4

Set controls listed in the following table to the designated position.

METER switch - IF
ATTENUATOR - compatible with the output of the sweep generator
MONITOR LEVEL - 50% rotation
MONITOR - AM
SELECTIVITY - 8 KC

For optimum tuning results set sweep generator center frequency to 120 KC.

Sweep width of sweep generator approximately 40 KC.

(3) Procedure. Set BAND SELECTOR and adjust TUNING until the response appears on the display unit.

Adjust T1 (top and bottom), T2 (top and bottom), and T3 bottom until the response is flat between and the markers and the skirts are symetrical. (The markers are caused by the 8 KC crystal filter). Caution: The ATTENUATOR must be set so the IF amplifier is not overloaded.

Return Receiver to original condition or proceed with the crystal filter adjustment.

b. Crystal Filter Adjustment. Check IF Amplifier tuning before adjusting crystal filters.

(1) Test Set Up. (same as IF amplifier adjustment).
(2) Preliminary adjustments. Remove the lead with violet insulation from the meter terminal and connect to the vertical deflection of the display unit.
Remove the crystal filter wiring cover.
Connect the test set up as shown in IF Amplifier Adjustment.
Set controls listed in the following table to the designated position.

METER switch - IF
ATTENUATOR - compatible with the output of the sweep generator
MONITOR LEVEL - 50% rotation
MONITOR - AM

(3) Procedure. Adjust BAND SELECTOR and TUNING until the response appears on the display unit.
Set SELECTIVITY switch to 1 KC and adjust sweep width of sweep generator until response occupies approximately one fourth of display horizontally.
Adjust C6 and C10 for a flat passband response.
Set SELECTIVITY to 2 KC and adjust sweep width of sweep generator until response occupies approximately one fourth of the display horizontally.
Adjust C7 and C11 for a flat passband response.
Set SELECTIVITY to 4 KC and adjust sweep width of sweep generator until response occupies approximately one fourth of the display horizontally.
Adjust C8 and C12 for a flat passband response.
Set SELECTIVITY to 8 KC and adjust sweep width of sweep generator until response occupies approximately one fourth of the display horizontally.
Adjust C9 and C13 for a flat passband response.
Return Receiver to original condition.

c. Local Oscillator Adjustment. Caution: Entire local oscillator adjustment procedure must be performed in sequence.

(1) Test Set Up.

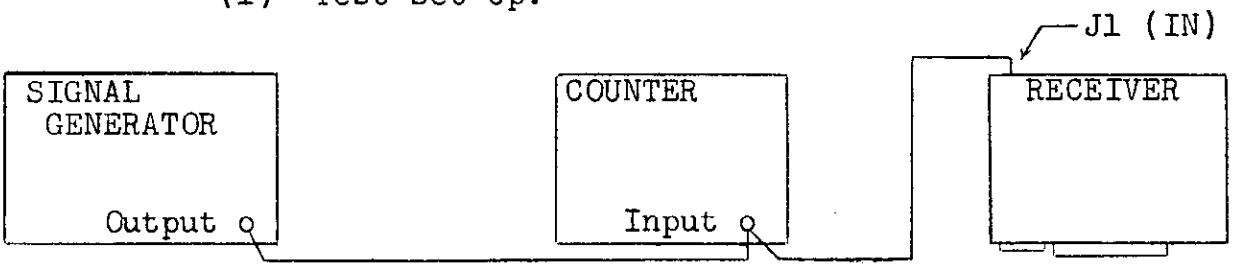

(2) Preliminary Adjustments. Set controls listed in table on following page to indicated position.

SELECTIVITY KC - 1
MONITOR LEVEL - 50% rotation
MONITOR - BFO
BAND SELECTOR - E
ATTENUATOR - compatible with signal generator output

(3) Procedure.

(a) Set signal generator to exactly 800 KC.
Tune Receiver to signal.
Move counter to IF OUT, J7.
Apply exactly +15V DC to FC, J6 and record the counter reading.
Remove +15V DC and adjust B.A., R203, until the counter reading is recorded above.
Adjust C78 until counter reads 2.215000 MC.
Adjust BFO for a zero beat in the audio output.

(b) Move counter back to signal generator.
Set signal generator to exactly 600 KC.
Set Receiver TUNING to exactly 600 KC.
Adjust L7 for a zero beat in the audio output.

(c) Set signal generator to exactly 800 KC.
Set Receiver TUNING to exactly 800 KC.
Adjust C78 for a zero beat in the audio output.

(d) Repeat steps (b) and (c) until a tone under 100 cps is heard at the audio output at both 600 KC and 800 KC without further adjustment of C78 and L7.

(e) Switch BAND SELECTOR to band D.
Set signal generator to exactly 500 KC.
Set Receiver TUNING to exactly 500 KC.
Adjust C76 for a zero beat in the audio output.

(f) Switch BAND SELECTOR to band C.
Set signal generator to exactly 340 KC.
Set Receiver TUNING to exactly 340 KC.
Adjust C73 for a zero beat in the audio output.

(g) Switch BAND SELECTOR to band B.
Set signal generator to exactly 200 KC.
Set Receiver TUNING to exactly 200 KC.
Adjust C71 for a zero beat in the audio output.

(h) Switch BAND SELECTOR to band A.
Set signal generator to exactly 80 KC.
Set Receiver TUNING to exactly 80 KC.
Adjust C69 for a zero beat in the audio output.

d. Limiter-Frequency Discriminator (Neutralizing and Tuning).

(1) Test Set Up.

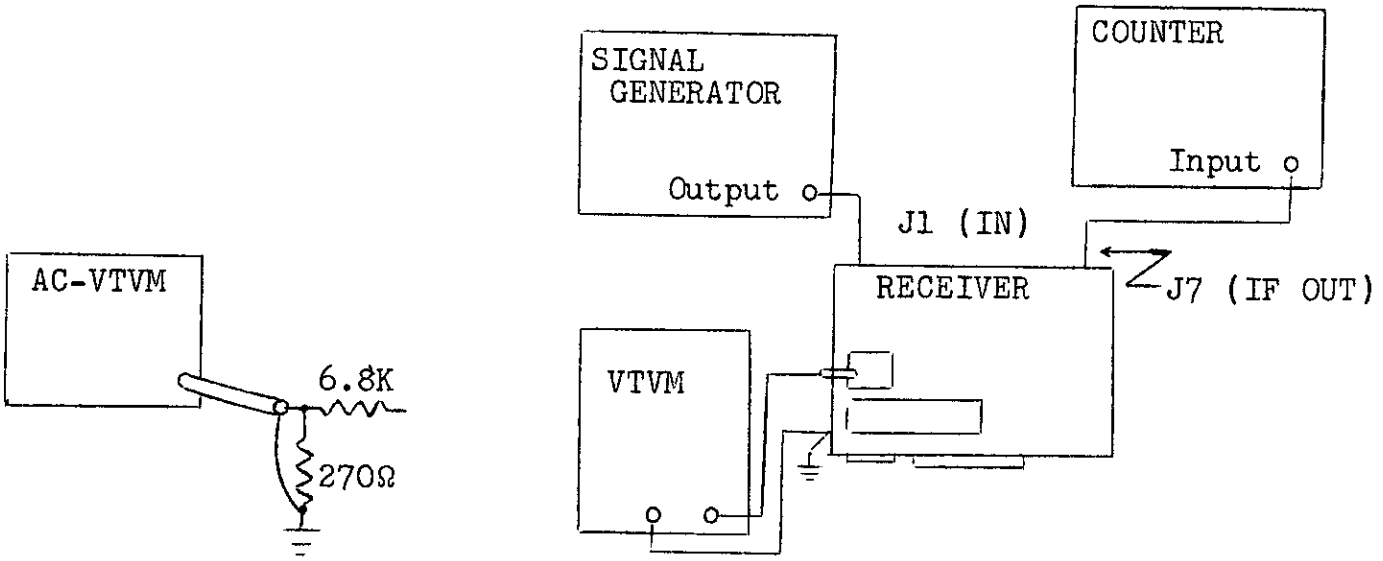

(2) Preliminary Adjustments. Set controls listed in the following table to the designated positions.

METER switch - IF
ATTENUATOR - compatible with signal generator output
SELECTIVITY KC - 8

Remove brown wire from discriminator assembly (filaments). Do not allow this wire to short to ground.

Make probe for AC-VTVM as shown in test set up using carbon resistors of the approximate value shown.

Connect DC probe of VTVM to terminal with coax marked 5 on demodulator assembly and connect common lead of VTVM to Receiver chassis.

(3) Procedure.

(a) Connect test set up as shown and perform preliminary adjustments.

(b) Adjust BAND SELECTOR and TUNING to signal generator frequency. Set TUNING for maximum meter indication and adjust signal generator level for a 0 DB meter indication.

(c) Neutralization: Adjust TUNING for a 2.215000 MC indication on the counter.

Connect loose end of 6.8K resistor on AC-VTVM cable to J3 of demodulator assembly.

Adjust C33 for minimum AC-VTVM reading.
Adjust T3 (top) for maximum AC-VTVM reading.
Adjust C33 for minimum AC-VTVM reading.
Remove 6.8K resistor.
Turn unit "off" and reconnect brown filament wire.

Reverse (Page 23) Blank

(d) Tuning: Adjust Receiver until counter reads 2.219000 MC and record VTVM reading.

Adjust Receiver until counter reads 2.211000 MC and record VTVM reading.

The 2.219 MC DC voltage and the 2.211 MC DC voltage should be approximately equal in magnitude and opposite in polarity (within .3 V DC). If the voltage readings are not equal and opposite in polarity, adjust L4 on the demodulator assembly, until the DC voltage on coax 5 is equal and opposite at 2.219 MC and 2.211 MC.

e. BFO Beat Frequency Oscillator.

(1) Connect the signal generator output to J1.
Connect the counter input to J7.
Place MONITOR switch in BFO.

(2) Adjust the BAND SELECTOR, TUNING and signal generator level so the Receiver meter indication is 0 DB and the counter reading is 2.215000 MC.

(3) Set BFO control to 0 on front panel of Receiver and adjust L11 for a zero beat in audio output.

f. Calibrate Oscillator.

(1) Test Set Up.

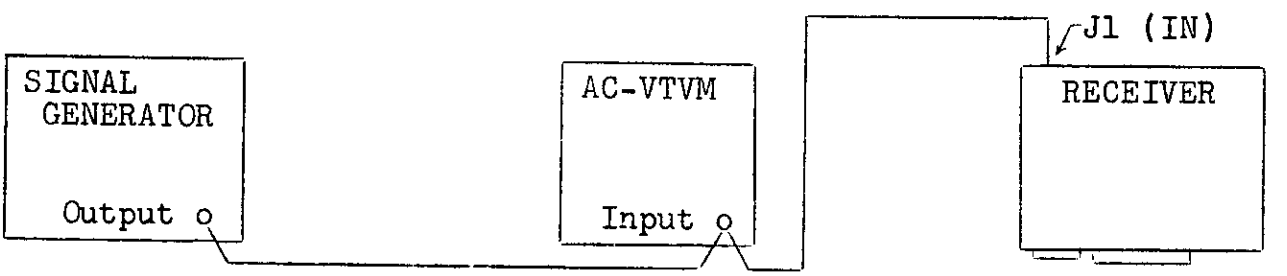

(2) Preliminary Adjustment. Set signal generator to 250 KC and an output level of .776 volts as indicated on the AC-VTVM. Set controls in the following table to the designated positions.

METER switch - IF
SELECTIVITY KC - 1
BAND SELECTOR - B or C
ATTENUATOR - 0 DB
MONITOR LEVEL - 50% rotation
MONITOR - AM
TUNING - exactly on CAL (250 KC)

(3) Procedure. Tune signal generator for maximum Receiver meter indication.

Adjust CAL 1 LEV for exact 0 DB meter indication.

Set ATTENUATOR to CAL position, METER switch to CAL, and adjust Receiver TUNING for a maximum meter indication.

Adjust CAL 2 LEV for exact 0 DB meter indication.

RESISTANCE MEASUREMENTS

Tube No.	Pin No.											
	1	2	3	4	5	6	7	8	9	10	11	12
V1 7586		135K		10				2.2K		0		1.8
V2 7586		35K		2.3K				160		1.8		0
V3 12AU7	34K	100K	470	0	0	28K	120K	4.7K	0			
V4 6BH6	.5	510	0	2	22K	26K	0					
V5 6BJ6	4	1.7K	0	2	22K	26K	0					
V6 6BH6	4	510	0	2	22K	26K	0					
V7 6CW4		32K		4K				200		2		0
V8 6AW8	390	1200	40K	.1	0	300	10K	30K	22K			
V9 7360	820	32K	100K	0	.2	70K	70K	11K	22K			
V10 Not Used												
V11 6CW4		80K		27K				50		0		1.5
V12 12AU7	22K	140K	INF	0	0	22K	140K	INF	0			
V13 12AU7	60K	250K	560	0	0	27K	120K	5.7K	0			
V14 6AQ5	100K	820	0	0	24K	23K	100K					
V15 6AQ5	100K	820	0	0	24K	23K	100K					
V16 6AU6	400K	38K	0	0	INF	55K	38K					
V17 0C2	38K	0	INF	0	38K	INF	0					
V18 6080	INF	INF	22K	INF	22K	INF	0	0				
Q1	Do not measure.											
Q2	Do not measure.											

Notes:
1) All resistances taken with primary power removed.
2) Switch settings:
MONITOR LEVEL - clockwise.
MONITOR - BFO.
ATTENUATOR - CAL.
3) INFindicates above 1 megohm.
4) Measure resistance with ohmmeters positive voltage on measuring lead.

VOLTAGE MEASUREMENTS

Tube No.	Pin No.											
	1	2	3	4	5	6	7	8	9	10	11	12
V1 7586		38		0				2.4		0		6.3AC
V2 7586		64						1.0		6.3AC		0
V3 12AU7	75	-2.5	1.5	6.3AC	6.3AC	147	0	7.2	0			
V4 6BH6	0	2.0	0	6.3AC	160	152	0					
V5 6BJ6	0	8.0	0	6.3AC	160	151	0					
V6 6BH6	0	2.0	0	6.3AC	160	150	0					
V7 6CW4		110		0				1.1		6.3AC		0
V8 6AW8	.9	0	120	6.3AC	0	3.1	0	140	160			
V9 7360	2.9	157	0	0	6.3AC	90	100	25	25			
V10 Not Used												
V11 6CW4		45		.9				.1		0		6.3AC
V12 12AU7	160	0	7.5	6.3AC	6.3AC	160	0	7.5	0			
V13 12AU7	61	0	1.6	6.3AC	6.3AC	150	20	24	0			
V14 6AQ5	0	13	6.3AC	0	160	160	0					
V15 6AQ5	0	13	6.3AC	0	160	160	0					
V16 6AU6	71	73	0	6.3AC	120	105	73					
V17 0C2	73	0	0	0	73	0	0					
V18 6080	120	270	165	120	270	165	6.3AC	0				

Transistor No.	e	b	c
Q1	.7	1.3	7.8
Q2	.5	1.1	4.6

Notes:
1) All voltages positive DC unless indicated otherwise.
2) Control settings: CAL 1 LEV - normal operating. METER switch - CAL MONITOR - BFO
3) Measurements taken with no signal tuned in.

IDENTIFICATION TABLE OF PARTS FOR R1307A/GR RADIO RECEIVER FSN 5820-908-5494

CONTRACTOR: RYCOM INSTRUMENTS

CONTRACT NO.: DA18-119-AMC-03406(X)

REF. SYM. OR PART NO. (1)	NAME OF PARTS AND DESCRIPTION (2)	FUNCTION (3)	ALL SYMBOLS AND PART NUMBERS INVOLVED (4)	JAN OR MIL TYPE NUMBER (5)	EQUIPMENT REPAIR PART KIT QUANTITIES PER SERVICE (6)					FEDERAL STOCK NUMBER (7)	TOTAL NUMBER PARTS PER END ITEM (8)
					ARMY	AF	NSA	NAVY	OTHER		
AT	RESISTOR, step by step: 11 steps, 10 db per step, 6000 ohm impedance; 0 to 810 KC frequency response; 10 ohm resistor in position 11 for calibration; 1-9/16 in. dia by 2-3/16 in. lg behind mtg surface body dim, solder lug terminals, bushing mtd 3/8-32 thd by 3/8 in. lg, $\frac{1}{4}$ in. dia shaft 2 in. lg from mtg surface. RYCOM INSTRUMENTS part no. 1307AAT.	Attenuates input signal in 10 db steps	AT							5905-909-5491	1
ATS1	SWITCH, rotary part of AT, 2 pole, 12 throw, 2 section; 30 degree positioning, shorting type, .35 amp at 500 vac max. resistive current rating; silver plated contacts; 1-5/16 in. h by 1-5/16 in. w by 2-3/16 lg behind mtg surface, solder lug terminals, bushing mtg 3/8-32 thd by 3/8 in. lg; $\frac{1}{4}$ in. dia shaft by $3\frac{1}{2}$ in. lg from mtg surface; RYCOM INSTRUMENTS pt. no. 1307AS-ATA.	Attenuator switch	ATS1								1
ATR1	RESISTOR, fixed, film part of AT, 3830Ω ±1%, $\frac{1}{4}$W at 70°C; temperature coefficient +200, -500 PPM/°C; .156 in. dia by .550 in. lg max; insulated; 2 axials wire leads MIL equivalent RN60; Electra Mfg. Co. part no. MF5C-D-3831F.	Attenuator resistor	ATR1								1
ATR2	RESISTOR, fixed, film: part of AT; 1620Ω ±1%, $\frac{1}{4}$W at 70°C; temperature coefficient +200, -500 PPM/°C; .156 in. dia by .550 in. lg max; insulated; 2 axial wire leads MIL equivalent RN60; Electra Mfg. Co. part no. MF5C-D-1621F.	Attenuator resistor	ATR2								1
ATR3	RESISTOR, fixed, film: part of AT, 412Ω ±1%, $\frac{1}{4}$W at 70°C; temperature coefficient +200, -500 PPM/°C; .156 in. dia by .550 in. lg max; insulated; 2 axial wire leads MIL equivalent RN60; Electra Mfg. Co. part no. MF5C-D-4120F.	Attenuator resistor	ATR3								1

Reverse (Page 26) Blank

IDENTIFICATION TABLE OF PARTS FOR R1307A/GR RADIO RECEIVER

CONTRACTOR: RYCOM INSTRUMENTS | CONTRACT NO.: DA18-119-AMC-03406(X)

REF. SYM. OR PART NO. (1)	NAME OF PARTS AND DESCRIPTION (2)	FUNCTION (3)	ALL SYMBOLS AND PART NUMBERS INVOLVED (4)	JAN OR MIL TYPE NUMBER (5)	EQUIPMENT REPAIR PART KIT QUANTITIES PER SERVICE (6)					FEDERAL STOCK NUMBER (7)	TOTAL NUMBER PARTS PER END ITEM (8)
					ARMY	AF	NSA	NAVY	OTHER		
ATR4	RESISTOR, fixed, film: part of AT; 130Ω ±1%, ¼W at 70°C, temperature coefficient +200, -500 PPM/°C; .156 in. dia by .550 in. lg max; insulated; 2 axial wire leads MIL equivalent RN60; Electra Mfg. Co. part no. MF5C-D-1300F.	Attenuator resistor	ATR4								1
ATR5	RESISTOR, fixed, film: part of AT; 41.2Ω ±1%, ¼W at 70°C; temperature coefficient +200, -500 PPM/°C; .156 in. dia by .550 in. lg max; insulated; 2 axial wire leads MIL equivalent RN60; Electra Mfg. Co. part no. MF5C-D-41R2F.	Attenuator resistor	ATR5								1
ATR6	RESISTOR, fixed, film: part of AT; 13 Ω ±1%, ¼W at 70°C, temperature coefficient +200, -500 PPM/°C, .156 in. dia by .550 in. lg max; insulated; 2 axial wire leads MIL equivalent RN60; Electra Mfg. Co. part no. MF5C-D-13R0F.	Attenuator resistor	ATR6, ATR7, ATR8, ATR9, ATR10								5
ATR7	RESISTOR, fixed, film: part of AT. Same as ATR6.	Attenuator resistor									
ATR8	RESISTOR, fixed, film: part of AT; same as ATR6.	Attenuator resistor									
ATR9	RESISTOR, fixed, film: part of AT; Same as ATR6	Attenuator resistor									
ATR10	RESISTOR, fixed, film: part of AT; Same as ATR6	Attenuator resistor									
ATR11	RESISTOR, fixed, film: part of AT; 6Ω ±1% ¼W at 70°C; temperature coefficient +200, -500 PPM/°C; .156 in. dia by .550 in. lg max; insulated; 2 axial wire leads MIL equivalent RN60; Electra Mfg. Co. part no. MF5C-D-6R00F.	Attenuator resistor	ATR11								1

Reverse (Page 27) Blank

IDENTIFICATION TABLE OF PARTS FOR R1307A/GR RADIO RECEIVER

CONTRACTOR: RYCOM INSTRUMENTS | CONTRACT NO.: DA18-119-AMC-03406(X)

REF. SYM. OR PART NO. (1)	NAME OF PARTS AND DESCRIPTION (2)	FUNCTION (3)	ALL SYMBOLS AND PART NUMBERS INVOLVED (4)	JAN OR MIL TYPE NUMBER (5)	EQUIPMENT REPAIR PART KIT QUANTITIES PER SERVICE (6)					FEDERAL STOCK NUMBER (7)	TOTAL NUMBER PARTS PER END ITEM (8)
					ARMY	AF	NSA	NAVY	OTHER		
ATR12	RESISTOR, fixed, film: part of AT; 8.77Ω ±1%, ¼W at 70°C; temperature coefficient +200, -500 PPM/°C; .156 in. dia by .550 in. lg max.; insulated; 2 axial wire leads MIL equivalent RN60; Electra Mfg. Co. part no. MF5C-D-8R77F.	Attenuator resistor	ATR12, ATR13, ATR14, ATR15								4
ATR13	RESISTOR, fixed, film: part of AT; Same as ATR12	Attenuator resistor									
ATR14	RESISTOR, fixed, film: part of AT; Same as ATR12	Attenuator resistor									
ATR15	RESISTOR, fixed, film: part of AT; Same as ATR12	Attenuator resistor									
ATR16	RESISTOR, fixed, film: part of AT; 10Ω ±1%, ¼W at 70°C; temperature coefficient +200, -500 PPM/°C; .156 in. dia by .550 in. lg max; insulated; 2 axial wire leads MIL equivalent RN60; Electra Mfg. Co. part no. MF5C-D-10R0F.	Attenuator resistor	ATR16								1
C1	CAPACITOR, fixed, plastic dielectric (metalized mylar) 470,000 uuf ±20%, 200v dcw; .40 in. d by .30 in. h by .90 in. w body dim; 2 axial wire lead terminals; Electro Cube Inc. part no. 210B1C474.	DC blocking capacitor	C1, C2, C3 C54, C60								5
C2	CAPACITOR, fixed, plastic dielectric Same as C1	Decoupling capacitor									
C3	CAPACITOR, fixed, plastic dielectric Same as C1	Coupling capacitor									
C4	CAPACITOR, fixed, ceramic dielectric; 10,000 uuf -0% + tol not specified, 500v dcw; .593 in. dia by .156 in. lg body dim, 2 parallel wire lead terminals, Erie Technological Products Inc. part no. 0811000Z5U00103P.	Decoupling capacitor	C4, C5, C15 C17, C20, C22, C23 C26 C43, C46, C50, C56 C57, C61, C63, C68 C81 C82, C102 C118, C119							5910-854-3342	21

IDENTIFICATION TABLE OF PARTS FOR R1307A/GR RADIO RECEIVER

CONTRACTOR: RYCOM INSTRUMENTS

CONTRACT NO.: DA18-119-AMC-03406(X)

REF. SYM. OR PART NO. (1)	NAME OF PARTS AND DESCRIPTION (2)	FUNCTION (3)	ALL SYMBOLS AND PART NUMBERS INVOLVED (4)	JAN OR MIL TYPE NUMBER (5)	EQUIPMENT REPAIR PART KIT QUANTITIES PER SERVICE (6)					FEDERAL STOCK NUMBER (7)	TOTAL NUMBER PARTS PER END ITEM (8)
					ARMY	AF	NSA	NAVY	OTHER		
C5	CAPACITOR, fixed, ceramic dielectric: Same as C4	Coupling capacitor									
C6	CAPACITOR, variable, ceramic dielectric 1.5-7 uuf, NPO temperature coefficient, 350v dcw; screwdriver adjust; .531 in. dia by .305 in. h body dim; 2 solder lug terminals; Erie Technological Products Inc. Part no. 0557051C0P010R.	Filter input tuning capacitor	C6, C7, C8, C9							5910-870-5814	4
C7	CAPACITOR, variable, ceramic dielectric; Same as C6	Filter input tuning capacitor									
C8	CAPACITOR, variable, ceramic dielectric, Same as C6	Filter input tuning capacitor									
C9	CAPACITOR, variable, ceramic dielectric; Same as C6	Filter input tuning capacitor									
C10	CAPACITOR, variable, ceramic dielectric; 5-25 uuf, NPO temperature coefficient, 350v dcw; screwdriver adjust .531 in. dia by .305 in. h body dim; 2 solder lug terminals; Erie Technological Products Inc. part no. 0557051C0P039R	Filter output tuning capacitor	C10, C11, C12 C13								4
C11	CAPACITOR, variable, ceramic dielectric; Same as C10	Filter output tuning capacitor									
C12	CAPACITOR, variable, ceramic dielectric; Same as C10	Filter output tuning capacitor									
C13	CAPACITOR, variable, ceramic dielectric; Same as C10	Filter output tuning capacitor									
C14	CAPACITOR, fixed, ceramic dielectric: 10,000 uuf ±20%, 200v dcw; .344 in. dia by .125 in. lg, body dim; 2 parallel wire lead terminals; Erie Technological Products Inc. part no. 0805030Z5U00103M.	Bypass capacitor	C14, C18 C19, C21, C28, C30, C32, C35, C39, C47, C49 C103 C105, C107, C108, C109, C110, C112								18

IDENTIFICATION TABLE OF PARTS FOR R1307A/GR RADIO RECEIVER

CONTRACTOR: RYCOM INSTRUMENTS | CONTRACT NO.: DA18-119-AMC-03406(X)

REF. SYM. OR PART NO. (1)	NAME OF PARTS AND DESCRIPTION (2)	FUNCTION (3)	ALL SYMBOLS AND PART NUMBERS INVOLVED (4)	JAN OR MIL TYPE NUMBER (5)	EQUIPMENT REPAIR PART KIT QUANTITIES PER SERVICE (6)					FEDERAL STOCK NUMBER (7)	TOTAL NUMBER PARTS PER END ITEM (8)
					ARMY	AF	NSA	NAVY	OTHER		
C15	CAPACITOR, fixed, ceramic dielectric: Same as C4	Bypass capacitor									
C16	CAPACITOR, fixed, plastic dielectric: (metalized mylar); 100, 000 uuf ±10%, 200v dcw, .30 in. d by .20 in. h by .53 in. w body dim; 2 axial wire lead terminals, Electro Cube Inc. part no. 210B1C104K.	Decoupling capacitor	C16, C48, C111, C115 C116 C120, C121,								7
C17	CAPACITOR, fixed, ceramic dielectric: Same as C4	Decoupling capacitor									
C18	CAPACITOR, fixed, ceramic dielectric: Same as C14	Bypass capacitor									
C19	CAPACITOR, fixed, ceramic dielectric: Same as C14	Decoupling capacitor									
C20	CAPACITOR, fixed, ceramic dielectric: Same as C4	Bypass capacitor									
C21	CAPACITOR, fixed, ceramic dielectric: Same as C14	Bypass capacitor									
C22	CAPACITOR, fixed, ceramic dielectric: Same as C4	Bypass capacitor									
C23	CAPACITOR, fixed, ceramic dielectric: Same as C4	Decoupling capacitor									
C24	CAPACITOR, fixed, mica dielectric: 100 uuf ±5%, 500v dcw; .360 in. d by .175 in. h by .451 in. w, body dim; 2 parallel wire lead terminals; Electro Motive Mfg. Co. Inc. part no. DM15E101J.	Bypass neutralizing capacitor	C24, C59, C62							5910-682-2518	3
C25	CAPACITOR, fixed, ceramic dielectric: 1000 uuf ±20%, 500v dcw; .290 in. dia by .156 in. lg, body dim, 2 parallel wire lead terminals; Erie Technological Products Inc. part no. 0831000Z5U00102M.	Coupling capacitor	C25 C29, C36, C38, C40, C41, C42, C44							5910-854-3346	8

IDENTIFICATION TABLE OF PARTS FOR R1307A/GR RADIO RECEIVER

CONTRACTOR: RYCOM INSTRUMENTS

CONTRACT NO.: DA18-119-AMC-03406(X)

REF. SYM. OR PART NO. (1)	NAME OF PARTS AND DESCRIPTION (2)	FUNCTION (3)	ALL SYMBOLS AND PART NUMBERS INVOLVED (4)	JAN OR MIL TYPE NUMBER (5)	EQUIPMENT REPAIR PART KIT QUANTITIES PER SERVICE (6)					FEDERAL STOCK NUMBER (7)	TOTAL NUMBER PARTS PER END ITEM (8)
					ARMY	AF	NSA	NAVY	OTHER		
C26	CAPACITOR, fixed, ceramic dielectric: Same as C4	Bypass capacitor									
C27	CAPACITOR, fixed, ceramic dielectric: 3000 uuf -0% + tol not specified, 500v dcw; .360 in. dia by .156 in. lg, body dim; 2 parallel wire lead terminals; Erie Technoiogical Products Inc. part no. 080100Z5U-00302P.	DC blocking capacitor	C27, C34, C45, C51							5910-854-3347	4
C28	CAPACITOR, fixed, ceramic dielectric: Same as C14	Decoupling capacitor									
C29	CAPACITOR, fixed, ceramic dielectric: Same as C25	Decoupling capacitor									
C30	CAPACITOR, fixed, ceramic dielectric Same as C14	Coupling capacitor									
C31	CAPACITOR, fixed, mica dielectric; 18 uuf ±5%, 500v dcw; .351 in. d by .163 in. h by .446 in. w, body dim; 2 parallel wire lead terminals; Electro Motive Mfg. Co. Inc. part no. DM15C180J.	Neutralizing capacitor	C31							5910-834-5738	1
C32	CAPACITOR, fixed, ceramic dielectric: Same as C14	Bypass capacitor									
C33	CAPACITOR, variable, ceramic dielectric: 5-25 uuf, 350v dcw, zero temp coef; screwdriver adjust; .750 in. d by .234 in. h by .531 in. w, body dim; two .124 in. dia mtg holes spaced .312 in. c to c; 2 solder lug terminals; Erie Technological Products Inc. part no. 0557006C0P039R.	Variable neutralizing capacitor	C33								1
C34	CAPACITOR, fixed, ceramic dielectric: Same as C27	Coupling capacitor									
C35	CAPACITOR, fixed, ceramic dielectric: Same as C14	Bypass capacitor									
C36	CAPACITOR, fixed, ceramic dielectric: Same as C25	Coupling capacitor									

IDENTIFICATION TABLE OF PARTS FOR R1307A/GR RADIO RECEIVER

CONTRACTOR: RYCOM INSTRUMENTS

CONTRACT NO.: DA18-119-AMC-03406(X)

REF. SYM. OR PART NO. (1)	NAME OF PARTS AND DESCRIPTION (2)	FUNCTION (3)	ALL SYMBOLS AND PART NUMBERS INVOLVED (4)	JAN OR MIL TYPE NUMBER (5)	EQUIPMENT REPAIR PART KIT QUANTITIES PER SERVICE (6)					FEDERAL STOCK NUMBER (7)	TOTAL NUMBER PARTS PER END ITEM (8)
					ARMY	AF	NSA	NAVY	OTHER		
C37	CAPACITOR, fixed, mica dielectric: 82 uuf ±5%, 500v dcw; .359 in. d by .172 in. h by .450 in. w, body dim; 2 parallel wire lead terminals; Electro Motive Mfg. Co. Inc. part no. DM15E820J.	FL6 tuning capacitor	C37, C53							5910-062-1993	2
C38	CAPACITOR, fixed, ceramic dielectric: Same as C25	Bypass capacitor									
C39	CAPACITOR, fixed, ceramic dielectric: Same as C14	Bypass capacitor									
C40	CAPACITOR, fixed, ceramic dielectric: Same as C25	Coupling capacitor									
C41	CAPACITOR, fixed, ceramic dielectric: Same as C25	Decoupling capacitor									
C42	CAPACITOR, fixed, ceramic dielectric: Same as C25	Bypass capacitor									
C43	CAPACITOR, fixed, ceramic dielectric: Same as C4	Coupling capacitor									
C44	CAPACITOR, fixed, ceramic dielectric: Same as C25	Coupling capacitor									
C45	CAPACITOR, fixed, ceramic dielectric: Same as C27	Bypass capacitor									
C46	CAPACITOR, fixed, ceramic dielectric: Same as C4	Bypass capacitor									
C47	CAPACITOR, fixed, ceramic dielectric: Same as C14	Bypass capacitor									
C48	CAPACITOR, fixed, plastic dielectric: Same as C16	Decoupling capacitor									
C49	CAPACITOR, fixed, ceramic dielectric: Same as C14	Bypass capacitor									
C50	CAPACITOR, fixed, ceramic dielectric: Same as C4	Coupling capacitor									

IDENTIFICATION TABLE OF PARTS FOR R1307A/GR RADIO RECEIVER

CONTRACTOR: RYCOM INSTRUMENTS

CONTRACT NO.: DA18-119-AMC-03406(X)

REF. SYM. OR PART NO. (1)	NAME OF PARTS AND DESCRIPTION (2)	FUNCTION (3)	ALL SYMBOLS AND PART NUMBERS INVOLVED (4)	JAN OR MIL TYPE NUMBER (5)	EQUIPMENT REPAIR PART KIT QUANTITIES PER SERVICE (6)					FEDERAL STOCK NUMBER (7)	TOTAL NUMBER PARTS PER END ITEM (8)
					ARMY	AF	NSA	NAVY	OTHER		
C51	CAPACITOR, fixed, ceramic dielectric: Same as C27	Coupling capacitor									
C52	CAPACITOR, fixed, mica dielectric: 500 uuf ±5%, 500v dcw; .482 in. d by .186 in. h by .628 in. w, body dim; 2 parallel wire lead terminals; Electro Motive Mfg. Co. Inc. part no. DM19E501J.	Crystal tuning capacitor	C52							5910-850-9666	1
C53	CAPACITOR, fixed, mica dielectric: Same as C37	Crystal tuning capacitor									
C54	CAPACITOR, fixed, plastic dielectric: Same as C1	Decoupling capacitor									
C55	Not used										
C56	CAPACITOR, fixed, ceramic dielectric: Same as C4	Coupling capacitor									
C57	CAPACITOR, fixed, ceramic dielectric: Same as C4	Coupling capacitor									
C58	CAPACITOR, fixed, mica dielectric: 150 uuf ±5%, 500v dcw; .367 in. d by .184 in. h by .445 in. w, body dim; 2 parallel wire lead terminals; Electro Motive Mfg. Co. Inc. part no. DM15E151J.	V3a drive divider capacitor	C58, C91, C93							5910-726-3212	3
C59	CAPACITOR, fixed, mica dielectric: Same as C24	V3a drive divider capacitor									
C60	CAPACITOR, fixed, plastic dielectric: Same as C1	Decoupling capacitor									
C61	CAPACITOR, fixed, ceramic dielectric: Same as C4	Decoupling capacitor									
C62	CAPACITOR, fixed, mica dielectric: Same as C24	Coupling capacitor									
C63	CAPACITOR, fixed, ceramic dielectric: Same as C4	Bypass capacitor									

IDENTIFICATION TABLE OF PARTS FOR R1307A/GR RADIO RECEIVER

CONTRACTOR: RYCOM INSTRUMENTS

CONTRACT NO.: DA18-119-AMC-03406(X)

REF. SYM. OR PART NO. (1)	NAME OF PARTS AND DESCRIPTION (2)	FUNCTION (3)	ALL SYMBOLS AND PART NUMBERS INVOLVED (4)	JAN OR MIL TYPE NUMBER (5)	EQUIPMENT REPAIR PART KIT QUANTITIES PER SERVICE (6)					FEDERAL STOCK NUMBER (7)	TOTAL NUMBER PARTS PER END ITEM (8)
					ARMY	AF	NSA	NAVY	OTHER		
C64	CAPACITOR, fixed, mica dielectric: 10,000 uuf ±5%, 500v dcw; .879 in. d by .323 in. h by .783 in. w, body dim, 2 parallel wire lead terminals; Electro Motive Mfg. Co. Inc. part no. DM30E103J.	DC blocking capacitor	C64, C97, C117							5910-702-0112	3
C65	CAPACITOR, variable, air dielectric: 6.8-99 uuf, 1500v ac peak rating: 2-1/32 in. lg by 1-3/8 in. w by 1-3/8 in. h, body dim, ¼ in. dia by 25/32 in. lg shaft, from mtg surface; bushing mtd, 3/8-32 thd by 3/8 in. lg; 2 solder lug terminals; oilite bearing; RYCOM INSTRUMENTS part no. 167-151-10	Variable main tuning capacitor	C65							5910-854-3346	1
C66	CAPACITOR, fixed, mica dielectric: 266 uuf ±1%, 500v dcw; .391 in. d by .214 in. h by .467 in. w, body dim; 2 parallel wire lead terminals; Electro Motive Mfg. Co. Inc. part no. DM15E266OF. Note: Below Ser. No. 401 used 270 uuf, Use 266 or 270 uuf for replacement as required for frequency calibration.	Tuning capacitor	C66								1
C67	CAPACITOR, fixed, ceramic dielectric: 75 uuf ±5%, N750 ±120 ppm temperature coefficient, 500v dcw; .437 in. dia by .156 in. lg, body dim; 2 parallel wire lead terminals; Erie Technological Products Inc. part no. 0851000U2J0750J.	Temperature compensating capacitor	C67								1
C68	CAPACITOR, fixed, ceramic dielectric: Same as C4	Decoupling capacitor									
C69	CAPACITOR, variable, air dielectric: 2.2-34 uuf, 650v peak rating; screwdriver adjust; .887 in. lg by .500 in. w by .563 in. h, body dim; two solder terminals (mtg tabs) spaced .500 in. c to c; E. F. Johnson Company part no. 193-10-5.	Band A variable tuning capacitor	C69, C71, C73, C76, C78								5

IDENTIFICATION TABLE OF PARTS FOR R1307A/GR RADIO RECEIVER

CONTRACTOR: RYCOM INSTRUMENTS

CONTRACT NO.: DA18-119-AMC-03406(X)

REF. SYM. OR PART NO. (1)	NAME OF PARTS AND DESCRIPTION (2)	FUNCTION (3)	ALL SYMBOLS AND PART NUMBERS INVOLVED (4)	JAN OR MIL TYPE NUMBER (5)	EQUIPMENT REPAIR PART KIT QUANTITIES PER SERVICE (6)					FEDERAL STOCK NUMBER (7)	TOTAL NUMBER PARTS PER END ITEM (8)
					ARMY	AF	NSA	NAVY	OTHER		
C70	CAPACITOR, fixed, ceramic dielectric: 68 uuf ±5%, NPO ±30 ppm temperature coefficient, 500v dcw; .593 in. dia by .156 in. lg, body dim; 2 parallel wire lead terminals; Erie Technological Products Inc. part no. 0811000C0G0680J.	Band A tuning capacitor	C70, C72, C77								3
C71	CAPACITOR, variable, ceramic dielectric: Same as C69	Band B variable tuning capacitor									
C72	CAPACITOR, fixed, ceramic dielectric: Same as C70	Band B tuning capacitor									
C73	CAPACITOR, variable, ceramic dielectric: Same as C69	Band C variable tuning capacitor									
C74	CAPACITOR, fixed, ceramic dielectric: 47 uuf ±5%, NPO ±30 ppm temperature coefficient, 500v dcw; .593 in. dia by .156 in. lg, body dim; 2 parallel wire lead terminals; Erie Technological Products Inc. part no. 0811000C0G0470J.	Band C tuning capacitor	C74								1
C75	CAPACITOR, fixed, ceramic dielectric: 10 uuf ±.5 uuf, N750 ±120 ppm temperature coefficient, 500v dcw; .290 in. dia by .156 in. lg, body dim; 2 parallel wire lead terminals; Erie Technological Products Inc. part no. 0831000U2J0100D.	Band C temperature compensating capacitor	C75								1
C76	CAPACITOR, variable, ceramic dielectric: Same as C69	Band D variable tuning capacitor									
C77	CAPACITOR, fixed, ceramic dielectric: Same as C70	Band D tuning capacitor									
C78	CAPACITOR, variable, ceramic dielectric: Same as C69	Band E variable tuning capacitor									
C79	Not used										
C80	Not used										

IDENTIFICATION TABLE OF PARTS FOR R1307A/GR RADIO RECEIVER

CONTRACTOR: RYCOM INSTRUMENTS | CONTRACT NO.: DA18-119-AMC-03406(X)

REF. SYM. OR PART NO. (1)	NAME OF PARTS AND DESCRIPTION (2)	FUNCTION (3)	ALL SYMBOLS AND PART NUMBERS INVOLVED (4)	JAN OR MIL TYPE NUMBER (5)	EQUIPMENT REPAIR PART KIT QUANTITIES PER SERVICE (6)					FEDERAL STOCK NUMBER (7)	TOTAL NUMBER PARTS PER END ITEM (8)
					ARMY	AF	NSA	NAVY	OTHER		
C81	CAPACITOR, fixed, ceramic dielectric: Same as C4	Bypass capacitor									
C82	CAPACITOR, fixed, ceramic dielectric: Same as C4	Bypass capacitor									
C83	Not used										
C84	CAPACITOR, fixed, mica dielectric: 200 uuf ±5%, 500v dcw; .360 in. d by .175 in. h by .451 in. w, body dim; 2 parallel wire lead terminals; Electro Motive Mfg. Co. Inc. part no. DM15E201J.	Coupling capacitor	C84							5910-850-9322	1
C85	CAPACITOR, fixed, ceramic dielectric: 100 uuf ±5%, NPO ±30 ppm temperature coefficient, 500v dcw; .675 in. dia by .156 in. lg, body dim; 2 parallel wire lead terminals; Erie Technological Products Inc. part no. 0841000C0G0101J.	BFO tuning capacitor	C85								1
C86	CAPACITOR, fixed, ceramic dielectric: 22 uuf ±5%, N330 ±60 ppm temperature coefficient, 500v dcw; .360 in. dia by .156 in. lg, body dim; 2 parallel wire lead terminals; Erie Technological Products Inc. part no. 0801000S2H0220J.	BFO temperature compensating capacitor	C86								1
C87	CAPACITOR, variable, air dielectric: 4.6-51 uuf, 1500v peak rating; 61/64 in. lg by 1-3/8 in. w by 1-3/8 in. h, body dim, $\frac{1}{4}$ in. dia by 25/32 in. lg shaft, from mtg. surface; bushing mtd 3/8-32 thd, 2 solder lug terminals; E. F. Johnson Co. part no. 167-3.	BFO variable tuning capacitor	C87							5910-908-5498	1
C88	CAPACITOR, fixed, mica dielectric: 1000 uuf ±5%, 500v dcw; .490 in. d by .197 in. h by .636 in. w, body dim; 2 parallel wire lead terminals; Electro Motive Mfg. Co. Inc. part no. DM19E102J.	BFO tuning capacitor	C88, C89							5910-691-0333	2

Reverse (Page 36) Blank

IDENTIFICATION TABLE OF PARTS FOR R1307A/GR RADIO RECEIVER

CONTRACTOR: RYCOM INSTRUMENTS

CONTRACT NO.: DA18-119-AMC-03406(X)

REF. SYM. OR PART NO. (1)	NAME OF PARTS AND DESCRIPTION (2)	FUNCTION (3)	ALL SYMBOLS AND PART NUMBERS INVOLVED (4)	JAN OR MIL TYPE NUMBER (5)	EQUIPMENT REPAIR PART KIT QUANTITIES PER SERVICE (6)					FEDERAL STOCK NUMBER (7)	TOTAL NUMBER PARTS PER END ITEM (8)
					ARMY	AF	NSA	NAVY	OTHER		
C89	CAPACITOR, fixed, mica dielectric: Same as C88	BFO tuning capacitor									
C90	CAPACITOR, fixed, mica dielectric: 27 uuf ±5%, 500v dcw; .344 in. d by .156 in. h by .437 in. w, body dim; 2 parallel wire lead terminals; Electro Motive Mfg. Co. Inc. part no. DM15E270J.	Y3 tuning capacitor	C90, C92								2
C91	CAPACITOR, fixed, mica dielectric: Same as C58	Y3 tuning capacitor									
C92	CAPACITOR, fixed, mica dielectric: Same as C90	Y2 tuning capacitor									
C93	CAPACITOR, fixed, mica dielectric: Same as C58	Y2 tuning capacitor									
C94	CAPACITOR, fixed, electrolytic: (tantalum); 6.8 uf ±20%, 35v dcw; metal case in plastic sleeve; .195 in. dia by .525 in. lg, body dim; 2 axial wire lead terminals; Texas Instruments Inc. part no. SCM685BP-035A4.	Bypass capacitor	C94, C99							5910-894-0710	2
C95	CAPACITOR, fixed, plastic dielectric: 220,000 uuf ±20%, 400v dcw; .50 in. d by .40 in. h by .90 in. w body dim; 2 axial wire lead terminals; Electro Cube Inc. part no. 210B1E224.	Coupling capacitor	C95, C98, C100							5910-854-3350	3
C96	CAPACITOR, fixed, mica dielectric: 3,900 uuf ±5%, 500v dcw; .533 in. d by .296 in. h by .683 in. w, body dim; 2 parallel wire lead terminals; Electro Motive Mfg. Co. Inc. part no. DM19E392J.	Frequency response determining capacitor	C96								1
C97	CAPACITOR, fixed, mica dielectric: Same as C64	Frequency response determining capacitor									
C98	CAPACITOR, fixed, plastic dielectric: Same as C95	Coupling capacitor									

IDENTIFICATION TABLE OF PARTS FOR R1307A/GR RADIO RECEIVER

CONTRACTOR: RYCOM INSTRUMENTS

CONTRACT NO.: DA18-119-AMC-03406(X)

REF. SYM. OR PART NO. (1)	NAME OF PARTS AND DESCRIPTION (2)	FUNCTION (3)	ALL SYMBOLS AND PART NUMBERS INVOLVED (4)	JAN OR MIL TYPE NUMBER (5)	EQUIPMENT REPAIR PART KIT QUANTITIES PER SERVICE (6)					FEDERAL STOCK NUMBER (7)	TOTAL NUMBER PARTS PER END ITEM (8)
					ARMY	AF	NSA	NAVY	OTHER		
C99	CAPACITOR, fixed, electrolytic: Same as C94	Bypass capacitor									
C100	CAPACITOR, fixed, plastic dielectric: Same as C95	Coupling capacitor									
C101	CAPACITOR, fixed, electrolytic: 20-40-40 uf, 25v-450v-450v dcw; 1-3/8 in. dia by 3-3/32 in. lg, body dim; 3 solder lug type terminals plus can negative terminal; mounted in 2 holes 1/8 in. dia, spaced 1-13/16 in. c to c; General Instruments Corp. part no. TMT-3625.	Bypass capacitor (20 uf) Filter capacitor (40-40 uf)	C101							5910-854-3349	1
C102	CAPACITOR, fixed, ceramic dielectric: Same as C4	Decoupling capacitor									
C103	CAPACITOR, fixed, ceramic dielectric: Same as C14	Decoupling capacitor									
C104	Not used										
C105	CAPACITOR, fixed, ceramic dielectric: Same as C14	Decoupling capacitor									
C106	Not used										
C107	CAPACITOR, fixed, ceramic dielectric: Same as C14	Decoupling capacitor									
C108	CAPACITOR, fixed, ceramic dielectric: Same as C14	Decoupling capacitor									
C109	CAPACITOR, fixed, ceramic dielectric: Same as C14	Decoupling capacitor									
C110	CAPACITOR, fixed, ceramic dielectric: Same as C14	Decoupling capacitor									
C111	CAPACITOR, fixed, plastic dielectric: Same as C16	Decoupling capacitor									
C112	CAPACITOR, fixed, ceramic dielectric: Same as C14	Decoupling capacitor									

Reverse (Page 38) Blank

IDENTIFICATION TABLE OF PARTS FOR R1307A/GR RADIO RECEIVER

CONTRACTOR: RYCOM INSTRUMENTS

CONTRACT NO.: DA18-119-AMC-03406(X)

REF. SYM. OR PART NO. (1)	NAME OF PARTS AND DESCRIPTION (2)	FUNCTION (3)	ALL SYMBOLS AND PART NUMBERS INVOLVED (4)	JAN OR MIL TYPE NUMBER (5)	EQUIPMENT REPAIR PART KIT QUANTITIES PER SERVICE (6)					FEDERAL STOCK NUMBER (7)	TOTAL NUMBER PARTS PER END ITEM (8)
					ARMY	AF	NSA	NAVY	OTHER		
C113	CAPACITOR, fixed, plastic dielectric: (metalized mylar); 100,000 uuf ±10%, 600v dcw; .500 in. dia by 1.38 in. lg body dim; 2 axial wire lead terminals; Cornell Dubilier Electric Corp. pt. no. WMF6P1. Note: Below Ser. No. 401 used 400v dcw, use 600v dcw for replacement on all units.	Transient suppression capacitor	C113								1
C114	CAPACITOR, fixed, plastic dielectric: (metalized mylar); 100,000 uuf ±10%, 400v dcw; .421 in. dia by 1.0 in. lg body dim; 2 axial wire lead terminals; Cornell Dubilier Electric Corp. pt. no. WMF4P1.	Decoupling capacitor	C114								1
C115	CAPACITOR, fixed, plastic dielectric: Same as C16	Bypass capacitor									
C116	CAPACITOR, fixed, plastic dielectric: Same as C16	Coupling capacitor									
C117	CAPACITOR, fixed, mica dielectric: Same as C64	Cathode tuning capacitor									
C118	CAPACITOR, fixed, ceramic dielectric: Same as C4	Decoupling capacitor									
C119	CAPACITOR, fixed, ceramic dielectric: Same as C4	Decoupling capacitor									
C120	CAPACITOR, fixed, plastic dielectric: Same as C16	Decoupling capacitor									
C121	CAPACITOR, fixed, plastic dielectric: Same as C16	Decoupling capacitor									
CR1	SEMICONDUCTOR DEVICE, diode: germanium, max rating at 25°C, 75 ma continuous forward current, 125v inverse voltage; hermetically sealed glass case, .107 in. dia by .265 in. lg; 2 axial wire lead terminals; Sylvania Electric Products Inc. part no. 1N277.	AM-Meter detector diode	CR1							5960-669-6884	1

Reverse (Page 39) Blank

IDENTIFICATION TABLE OF PARTS FOR R1307A/GR RADIO RECEIVER

CONTRACTOR: RYCOM INSTRUMENTS | CONTRACT NO.: DA18-119-AMC-03406(X)

REF. SYM. OR PART NO. (1)	NAME OF PARTS AND DESCRIPTION (2)	FUNCTION (3)	ALL SYMBOLS AND PART NUMBERS INVOLVED (4)	JAN OR MIL TYPE NUMBER (5)	EQUIPMENT REPAIR PART KIT QUANTITIES PER SERVICE (6)					FEDERAL STOCK NUMBER (7)	TOTAL NUMBER PARTS PER END ITEM (8)
					ARMY	AF	NSA	NAVY	OTHER		
CR2	SEMICONDUCTOR DEVICE, diode: switching diode; 75 ma dc avg fwd current, 250 mw max at 25°C; hermetically sealed in glass case, .125 in. max dia by .300 in. max lg; 2 axial wire lead terminals; Texas Instruments Inc. part no. 1N914.	Limiter diode	CR2; CR3, CR4							5960-842-9864	3
CR3	SEMICONDUCTOR DEVICE, diode: Same as CR2	Clipper diode									
CR4	SEMICONDUCTOR DEVICE, diode: Same as CR2	Clipper diode									
CR5	SEMICONDUCTOR DEVICE, diode: Silicon voltage regulator, 7.5v nominal zener voltage, 400 mw max at 25°C; hermetically sealed in glass case, .104 in. max dia by .300 in. max lg; 2 axial wire lead terminals; Motorola Inc. part no. 1N755.	Zener regulator diode	CR5							5960-081-6102	1
CR6	SEMICONDUCTOR DEVICE, set: Silicon signal, planar epitaxial passivated diodes; 75 ma dc avg fwd current, 250 mw max. at 25°C; 2 matched diodes; plastic outer case .156 in. h by .250 in. w, 4 axial wire lead terminals; RYCOM INSTRUMENTS pt. no. RY4306. Note: Below Ser. No. 401 used 1N4306, use either 1N4306 or RY4306 for replacement on all units.	Mixer diode assembly	CR6								1
CR7	SEMICONDUCTOR DEVICE, Diode: silicon voltage regulator, 75v nominal zener voltage, 1 watt max at 25°C; hermetically sealed in metal top hat case, .200 in. dia by .350 in. lg; 2 axial wire lead terminals; Dickson Electronics Corp. part no. 1N1792.	Zener regulator diode	CR7							5960-752-6021	1

IDENTIFICATION TABLE OF PARTS FOR R1307A/GR RADIO RECEIVER

CONTRACTOR: RYCOM INSTRUMENTS

CONTRACT NO.: DA18-119-AMC-03406(X)

REF. SYM. OR PART NO. (1)	NAME OF PARTS AND DESCRIPTION (2)	FUNCTION (3)	ALL SYMBOLS AND PART NUMBERS INVOLVED (4)	JAN OR MIL TYPE NUMBER (5)	EQUIPMENT REPAIR PART KIT QUANTITIES PER SERVICE (6)					FEDERAL STOCK NUMBER (7)	TOTAL NUMBER PARTS PER END ITEM (8)
					ARMY	AF	NSA	NAVY	OTHER		
CR8	DIODE ASSEMBLY: Silicon rectifier full wave bridge assembly, maximum rating at 25°C with resistive load 1.5 amperes average rectified current 560 volts RMS; open construction 1 in. lg by 1 in. w by 5/8 in. h; 3 solder terminals; one 6-32 tapped mtg hole terminal; RYCOM INSTRUMENTS pt. no. 3055-1 (Interchangeable with Erie pt. no. FWB3008AS).	Power rectifier assembly	CR8								1
None	SEMICONDUCTOR DEVICE, diode: Replacement diode for pt. no. 3055-1 above. Silicon rectifier, 850 ma maximum average output current at 25°C with resistive or inductive load, 800 piv at 25°C; plastic insulated; .230 in. dia by .225 in. lg; two axial wire lead terminals; Semicon Inc. pt. no. SM180S.	Replacement diodes for CR8									4
DS1	LAMP, incandescent: 6.3 volt .15 amp, miniature bayonet base; clear bulb, 1-3/16 in lg; General Electric Co. part no. 47.	Dial light	DS1, DS2							6240-155-8706	2
DS2	LAMP, incandescent: Same as DS1	Dial light									
F1	FUSE, cartridge: 2 amp; 125v max slow blow; ferrule type; $\frac{1}{4}$ in. dia by $1\frac{1}{4}$ in. lg; glass body; Bussman Mfg. Division McGraw Edison part no. MDX-2.	Primary power fuse	F1							5920-581-4144	1
FL1	FILTER, bandpass: 2.215 mc center frequency, 1000 cps bandwidth, 4 K input impedance to be shunted by 30 uuf, 5.6 K output impedance to be shunted by 40 uuf; metal case 2-5/8 in. lg by 1-5/16 in. w by 1-3/4 in. h; 2 solder lug terminals; two 6-32 tapped mtg holes; RYCOM INSTRUMENTS pt. no. 1307FL1.	1 KC bandpass filter	FL1							5915-757-9245	1

IDENTIFICATION TABLE OF PARTS FOR R1307A/GR RADIO RECEIVER

CONTRACTOR: RYCOM INSTRUMENTS

CONTRACT NO.: DA18-119-AMC-03406(X)

REF. SYM. OR PART NO. (1)	NAME OF PARTS AND DESCRIPTION (2)	FUNCTION (3)	ALL SYMBOLS AND PART NUMBERS INVOLVED (4)	JAN OR MIL TYPE NUMBER (5)	EQUIPMENT REPAIR PART KIT QUANTITIES PER SERVICE (6)					FEDERAL STOCK NUMBER (7)	TOTAL NUMBER PARTS PER END ITEM (8)
					ARMY	AF	NSA	NAVY	OTHER		
FL2	FILTER, bandpass: 2.215 mc center frequency, 2000 cps bandwidth, 4 K input impedance to be shunted by 30 uuf, 5.6 K output impedance to be shunted by 40 uuf; metal case 2-5/8 in. lg by 1-5/16 in. w by 1-3/4 in. h; 2 solder lug terminals; two 6-32 tapped mtg holes: RYCOM INSTRUMENTS pt. no. 1307FL2.	2 KC bandpass filter	FL2							5915-757-9246	1
FL3	FILTER, bandpass: 2.215 mc center frequency, 4000 cps bandwidth, 4 K input impedance to be shunted by 30 uuf, 5.6 K output impedance to be shunted by 40 uuf; metal case 2-5/8 in. lg by 1-5/16 in. w by 1-3/4 in. h; 2 solder lug terminals; two 6-32 tapped mtg holes; RYCOM INSTRUMENTS pt. no. 1307FL3.	4 KC bandpass filter	FL3							5915-757-9247	1
FL4	FILTER, bandpass: 2.215 mc center frequency, 8000 cps bandwidth, 4 K input impedance to be shunted by 30 uuf, 5.6 K output impedance to be shunted by 40 uuf; metal case 2-5/8 in. lg by 1-5/16 in. w by 1-3/4 in. h; 2 dolder lug terminals; two 6-32 tapped mtg holes, RYCOM INSTRUMENTS pt. no. 1307FL4.	8 KC bandpass filter	FL4							5915-757-9248	1
FL5	FILTER, lowpass: 800 KC cutoff, 5000 ohm impedance; metal case 2-7/8 in. by 2½ in. by 1-5/8 in; 3 solder lug terminals; two 8-32 thd mtg studs on 1-3/4 in. mtg centers, RYCOM INSTRUMENTS part no. 1307FL5.	Lowpass filter	FL5							5915-757-9249	1
FL6	CONVERTER, frequency shift: 2.215 mc center frequency, 12 KC bandwidth, 0 dc out at 2.215 mc ±200 cps, output voltage to be least .7 volt dc/KC when tested in a RYCOM test fixture 1307-100; hermetically sealed case 2-3/8 in. lg by 1 in. w by 1 in. h; 2 solder lug terminals; two 4-40 by 11/32 in. lg mtg studs; RYCOM INSTRUMENTS part no. 1307FL6.	8 KC frequency discriminator	FL6							5915-757-9250	1

IDENTIFICATION TABLE OF PARTS FOR R1307A/GR RADIO RECEIVER

CONTRACTOR: RYCOM INSTRUMENTS | CONTRACT NO.: DA18-119-AMC-03406(X)

REF. SYM. OR PART NO. (1)	NAME OF PARTS AND DESCRIPTION (2)	FUNCTION (3)	ALL SYMBOLS AND PART NUMBERS INVOLVED (4)	JAN OR MIL TYPE NUMBER (5)	EQUIPMENT REPAIR PART KIT QUANTITIES PER SERVICE (6)					FEDERAL STOCK NUMBER (7)	TOTAL NUMBER PARTS PER END ITEM (8)
					ARMY	AF	NSA	NAVY	OTHER		
FL7	FILTER, radio interference: 130v ac, 200v dc max input voltage, 3 amp rated current; metal case 2-21/32 in. lg by 2-15/16 in. w by 2-3/16 in. h; two 10-32 by $\frac{1}{2}$ in. lg mtg studs 2-5/32 in. c to c; RYCOM INSTRUMENTS FPA-101A.	Power line filter, blocks radio frequency	FL7							5915-908-5497	1
J1	CONNECTOR, receptacle, electrical: 1 contact, 1 connector mating end; 9/16 in. dia by 1-1/16 in. oa lg; bayonet latch type; bushing mounted, 3/8-32 thd; MIL no. UG10-4/U.	Input connector	J1, J5, J6, J7, J8	UG1094/U						5935-843-9008	5
J2	CONNECTOR, receptacle, electrical: 1 gold plated female contact; 75 ohm inpedance teflon insulation; mating end 12-32 screw on; 9/32 in. dia by 5/8 in. lg; bushing mounted 12-32 thd; Amphenol part no. 5116-056825.	IF output connector on IF	J2, J4								2
J3	JACK, tip: accommodates .040 dia pin plug; teflon body, .187 in. dia by .359 in. lg oa; press-fit mtg in .148 hole; Sealectro Corp part no. SKT-400.	Neutralizing connector on demodulator assembly	J3								1
J4	CONNECTOR, receptacle, electrical: Same as J2	Demodulation injection connector on demodulator assembly									
J5	CONNECTOR, receptacle, electrical: Same as J1	FM output connector									
J6	CONNECTOR, receptacle, electrical: Same as J1	Frequency control connector									
J7	CONNECTOR, receptacle, electrical: Same as J1	IF output connector									
J8	CONNECTOR, receptacle, electrical: Same as J1	Audio output connector									

IDENTIFICATION TABLE OF PARTS FOR R1307A/GR RADIO RECEIVER

CONTRACTOR: RYCOM INSTRUMENTS

CONTRACT NO.: DA18-119-AMC-03406(X)

REF. SYM. OR PART NO. (1)	NAME OF PARTS AND DESCRIPTION (2)	FUNCTION (3)	ALL SYMBOLS AND PART NUMBERS INVOLVED (4)	JAN OR MIL TYPE NUMBER (5)	EQUIPMENT REPAIR PART KIT QUANTITIES PER SERVICE (6)					FEDERAL STOCK NUMBER (7)	TOTAL NUMBER PARTS PER END ITEM (8)
					ARMY	AF	NSA	NAVY	OTHER		
J9	JACK, telephone: spring leaf type; 1-3/8 in. lg by 15/16 in. w by 15/16 in. h; accommodates two conductor plug .253 in. dia by 1-7/32 in. lg incl tip; bushing mounted 3/8-32 thd $\frac{1}{4}$ in. lg; Switchcraft Inc. part no. 11.	Headset connector	J9							5935-192-4894 5935-631-0115	1
L1	COIL, radio frequency: 500 uh, 11 ohm dc res, 15 min. Q; durez coating; $\frac{1}{2}$ in. dia by 5/16 in. lg; 2 axial wire lead terminals; Wilco Corp part no. 1500-12.	Decoupling inductor	L1, L2, L3, L5							5950-552-0776	4
L2	COIL, radio frequency: Same as L1	Decoupling inductor									
L3	COIL, radio frequency: Same as L1	Decoupling inductor									
L4	COIL, radio frequency: 35 to 60 uh inductance, tuned by means of a powdered iron core, ceramic form, 7/16 in dia by 7/8 in. lg behind mtg surface, 2 solder lug terminals on side; bushing mtd 10-32 thd by 5/16 in. lg; J. W. Miller Co. part no. 4509-41A.	FL6 variable tuning inductor	L4							5950-800-1648	1
L5	COIL, radio frequency: Same as L1	Decoupling inductor									
L6	TRANSFORMER, RADIO frequency: 19 turns tapped at 4 turns, 22 gauge wire; ceramic coil form 25/32 in. dia w/o terminals by 1-9/16 in. lg; bushing mtg $\frac{1}{4}$-32 thd by 13-32 in. lg, RYCOM INSTRUMENTS part no. 1307AL6.	Local oscillator tune inductor	L6							5950-908-5485	1
L7	COIL, radio frequency: variable inductance, 7 turns 28 gauge wire, ceramic form, TH powdered iron movable slug, 11/32 in. dia by 1-9/32 in. lg less tuning screw; 2 solder lug terminals; RYCOM INSTRUMENTS part no. 1307L7.	Local oscillator trimmer inductor	L7							5950-757-9268	1

Reverse (Page 44) Blank

IDENTIFICATION TABLE OF PARTS FOR R1307A/GR RADIO RECEIVER

CONTRACTOR: RYCOM INSTRUMENTS | CONTRACT NO.: DA18-119-AMC- 03408(X)

REF. SYM. OR PART NO. (1)	NAME OF PARTS AND DESCRIPTION (2)	FUNCTION (3)	ALL SYMBOLS AND PART NUMBERS INVOLVED (4)	JAN OR MIL TYPE NUMBER (5)	EQUIPMENT REPAIR PART KIT QUANTITIES PER SERVICE (6)					FEDERAL STOCK NUMBER (7)	TOTAL NUMBER PARTS PER END ITEM (8)
					ARMY	AF	NSA	NAVY	OTHER		
L8	COIL, radio frequency: 1.0 mh, 34 ohms dc res, 38 nom Q, 2.65 mc nom self resonate freq; 3/8 in. dia by 3/8 in. lg; 2 axial wire lead terminals; Wilco corp. part no. U102.	Decoupling inductor	L8, L10								2
L9	Not used										
L10	COIL, radio frequency: Same as L8	RF blocking inductor									
L11	COIL, radio frequency: 35 to 60 uh inductance, tuned by means of a powdered iron core, ceramic form, copper case 1¼ in. dia by 1-7/32 in. lg, two solder lug terminals, bushing mtd 10-32 thd by 5/16 in. lg; RYCOM INSTRUMENTS part no. 1307AL11.	BFO variable tuning inductor	L11							5950-908-5486	1
L12	COIL, radio frequency: 63 uh, 2 ohms dc res, 30 min. Q; carbonyl iron coil form; 7/32 in. dia by 5/16 in. lg, 2 axial wire lead terminals; Wilco Corp. part no. 3063-12.	Decoupling inductor	L12, L13, L14, L15, L16, L17, L18, L19, L21, L22							5950-843-7511	10
L13	COIL, radio frequency: Same as L12	Decoupling inductor									
L14	COIL, radio frequency: Same as L12	Decoupling inductor									
L15	COIL, radio frequency: Same as L12	Decoupling inductor									
L16	COIL, radio frequency: Same as L12	Decoupling inductor									
L17	COIL, radio frequency: Same as L12	Decoupling inductor									
L18	COIL, radio frequency: Same as L12	Decoupling inductor									

Reverse (Page 45) Blank

IDENTIFICATION TABLE OF PARTS FOR R1307A/GR RADIO RECEIVER

CONTRACTOR: RYCOM INSTRUMENTS — CONTRACT NO.: DA18-119-AMC-03406(X)

REF. SYM. OR PART NO. (1)	NAME OF PARTS AND DESCRIPTION (2)	FUNCTION (3)	ALL SYMBOLS AND PART NUMBERS INVOLVED (4)	JAN OR MIL TYPE NUMBER (5)	EQUIPMENT REPAIR PART KIT QUANTITIES PER SERVICE (6)					FEDERAL STOCK NUMBER (7)	TOTAL NUMBER PARTS PER END ITEM (8)
					ARMY	AF	NSA	NAVY	OTHER		
L19	COIL, radio frequency: Same as L12	Decoupling inductor									
L20	REACTOR, fixed inductance: 7 h min. at 175 ma dc, 180 ±10% ohms dc res, hermetically sealed metal case, 2-11/16 in. lg by 2-5/16 in. w by 3-3/4 in. h, two solder lug terminals; 4 mtg studs 6-32 thd by 11/32 in. lg: RYCOM INSTRUMENTS part no. 1307L20.	Power supply filter inductor	L20							5950-757-9252	1
L21	COIL, radio frequency: Same as L12	Decoupling inductor									
L22	COIL, radio frequency: Same as L12	Cathode tuning inductor									
LS1	LOUDSPEAKER, permanent magnet: 200 to 8000 cps ±5 db variation in output, 3.2 ohm voice coil at 400 cps, 3 watts peak power; 3½ in. dia cone, 3-3/64 in. lg by 3-3/64 in. w by 1-7/8 in. h; 4 mtg holes 2-13/16 in. c to c; Cleveland Electronics Inc. part no. PM3A.	Audio monitor	LS1							5965-892-3467	1
M1	MULTIMETER, replacement: 200 ua dc movement ±2% linearity, ±2% accuracy; 3 scales, 0-3, 0-10 volts RMS, -20 to +2 decibels with zero db equal 1 mw power in 600 ohm load; 3/4 in. depth of meter to mtg flange by 4¼ in. lg of mtg flange to 3-15/16 in. w of mtg flange, 2-7/8 in. dia of meter body by 1-1/8 in. lg of meter body; 2 stud terminals 10-32 thd; 4 mtg studs 6-32 thd; RYCOM INSTRUMENTS part no. 3005-31.	Level indicator	M1							6625-757-9253	1
P1	Not used										
P2	CONNECTOR, plug electrical: 1 gold plated male contact, 75 ohm impedance; teflon insulation; mating end 12-32 screw on; 13/32 in. dia by 1 in. lg; Amphenol part no. 5116-037525-1.	IF output cable connector	P2, P4								2

IDENTIFICATION TABLE OF PARTS FOR R1307A/GR RADIO RECEIVER

CONTRACTOR: RYCOM INSTRUMENTS | CONTRACT NO.: DA18-119-AMC-03406(X)

REF. SYM. OR PART NO. (1)	NAME OF PARTS AND DESCRIPTION (2)	FUNCTION (3)	ALL SYMBOLS AND PART NUMBERS INVOLVED (4)	JAN OR MIL TYPE NUMBER (5)	EQUIPMENT REPAIR PART KIT QUANTITIES PER SERVICE (6)					FEDERAL STOCK NUMBER (7)	TOTAL NUMBER PARTS PER END ITEM (8)
					ARMY	AF	NSA	NAVY	OTHER		
P3	Not used										
P4	CONNECTOR, plug electrical: Same as P2	Demodulator injection cable connector									
Q1	TRANSISTOR; switching, silicon NPN, double diffused, collector-base 25v, 1W, TO-18 case, .220 in. dia by .185 in. h; 3 wire lead terminals; Texas Instruments Inc. part no. 2N706.	V12 cathode load	Q1, Q2							5960-824-8448	2
Q2	TRANSISTOR: Same as Q1	Calibrate oscillator									
R1	RESISTOR, fixed, composition: 2200Ω ±5% ½W; .375 in. lg by .140 in. dia, insulated 2 axial wire lead terminals, spec no. MIL-R-11B.	Cathode resistor	R1	RC20GF222J						5905-279-1876	1
R2	RESISTOR, fixed, composition: 1800Ω ±5% ½W; .375 in. lg by .140 in. dia, insulated; 2 axial wire lead terminals, spec no. MIL-R-11B.	Coupling resistor	R2	RC20GF182J						5905-190-8881	1
R3	RESISTOR, fixed, composition: 120,000Ω ±5% ½W; .375 in. lg by .140 in. dia, insulated; 2 axial wire lead terminals, spec no. MIL-R-11B.	Decoupling resistor	R3, R62, R77	RC20GF124J						5905-192-3981	3
R4	RESISTOR, fixed, composition: 300Ω ±5% ½W; .375 in. lg by .140 in. dia, insulated; 2 axial wire lead terminals, spec no. MIL-R-11B.	Parasitic suppression resistor	R4, R36	RC20GF301J						5905-299-1965	2
R5	RESISTOR, fixed, composition: 10,000Ω ±5% ½W; .375 in. lg by .140 in. dia, insulated; 2 axial wire lead terminals, spec no. MIL-R-11B.	Grid resistor	R5, R20	RC20GF103J						5905-185-8510	2
R6	RESISTOR, fixed, composition: 160Ω ±5% ½W; .375 in. lg by .140 in. dia, insulated; 2 axial wire lead terminals, spec no. MIL-	Cathode resistor	R6	RC20GF161J						5905-256-0415	1

IDENTIFICATION TABLE OF PARTS FOR R1307A/GR RADIO RECEIVER

CONTRACTOR: RYCOM INSTRUMENTS | CONTRACT NO.: DA18-119-AMC-03406(X)

REF. SYM. OR PART NO. (1)	NAME OF PARTS AND DESCRIPTION (2)	FUNCTION (3)	ALL SYMBOLS AND PART NUMBERS INVOLVED (4)	JAN OR MIL TYPE NUMBER (5)	EQUIPMENT REPAIR PART KIT QUANTITIES PER SERVICE (6)					FEDERAL STOCK NUMBER (7)	TOTAL NUMBER PARTS PER END ITEM (8)
					ARMY	AF	NSA	NAVY	OTHER		
R7	RESISTOR, fixed, composition: 15,000Ω ±5% ½W; .375 in. lg by .140 in. dia, insulated; 2 axial wire lead terminals, spec no. MIL-R-11B.	Plate resistor	R7	RC20GF153J						5905-279-2616	1
R8	RESISTOR, fixed, composition: 1000Ω ±5% ½W; .375 in. lg by .140 in. dia, insulated; 2 axial wire lead terminals, spec no. MIL-R-11B.	Decoupling resistor	R8, R57, R64, R79, R82 R83, R84, R86	RC20GF102J						5905-195-6806	8
R9	RESISTOR, fixed, composition: 560Ω ±5% ½W; .375 in. lg by .140 in. dia, insulated; 2 axial wire lead terminals, spec no. MIL-R-11B.	Filter matching resistor	R9, R75	RC20GF561J						5905-195-6800	2
R10	RESISTOR, fixed, composition: 5600Ω ±5% ½W; .375 in. lg by .140 in. dia, insulated; 2 axial wire lead terminals, spec no. MIL-R-11B.	Filter matching resistor	R10	RC20GF562J						5905-195-6453	1
R11	RESISTOR, fixed, composition: 510Ω ±5% ½W; .375 in. lg by .140 in. dia, insulated 2 axial wire lead terminals, spec no. MIL-R-11B.	Cathode resistor	R11, R14, R17	RC20GF511J						5905-279-3511	3
R12	RESISTOR, fixed, composition: 6800Ω ±5% ½W; .375 in. lg by .140 in. dia, insulated; 2 axial wire lead terminals, spec no. MIL-R-11B.	Screen resistor	R12, R15, R18, R55	RC20GF682J						5905-279-3503	4
R13	RESISTOR, fixed, composition: 220,000Ω ±5% ½W; .375 in. lg by .140 in. dia, insulated; 2 axial wrie lead terminals, spec no. MIL-R-11B.	IF transformer swamping resistor	R13, R16, R98	RC20GF224J						5905-192-0667	3
R14	RESISTOR, fixed, composition: Same as R11	Cathode resistor									
R15	RESISTOR, fixed, composition: Same as R12	Screen resistor									
R16	RESISTOR, fixed, composition: Same as R13	IF transformer swamping resistor									

Reverse (Page 48) Blank

IDENTIFICATION TABLE OF PARTS FOR R1307A/GR RADIO RECEIVER

CONTRACTOR: RYCOM INSTRUMENTS

CONTRACT NO.: DA18-119-AMC-03406(X)

REF. SYM. OR PART NO. (1)	NAME OF PARTS AND DESCRIPTION (2)	FUNCTION (3)	ALL SYMBOLS AND PART NUMBERS INVOLVED (4)	JAN OR MIL TYPE NUMBER (5)	EQUIPMENT REPAIR PART KIT QUANTITIES PER SERVICE (6)					FEDERAL STOCK NUMBER (7)	TOTAL NUMBER PARTS PER END ITEM (8)
					ARMY	AF	NSA	NAVY	OTHER		
R17	RESISTOR, fixed, composition: Same as R11	Cathode resistor									
R18	RESISTOR, fixed, composition: Same as R12	Screen resistor									
R19	RESISTOR, fixed, composition: 47, 000Ω ±5% ½W; . 375 in. lg by . 140 in. dia, insulated; 2 axial wire lead terminals, spec no. MIL-R-11B.	Grid resistor	R19, R24, R26, R33, R70, R73	RC20GF473J						5905-254-9201	6
R20	RESISTOR, fixed, composition: Same as R5	Series attenuating resistor									
R21	RESISTOR, fixed, composition: 200Ω ±5% ½W; . 375 in. lg by . 140 in. dia, insulated; 2 axial wire lead terminals, spec no. MIL-R-11B.	Cathode resistor	R21	RC20GF201J						5905-279-2674	1
R22	RESISTOR, fixed, composition: 3900Ω ±5% ½W; . 375 in. lg by . 140 in. dia, insulated; 2 axial wire lead terminals, spec no. MIL-R-11B.	Grid resistor	R22	RC20GF392J						5905-279-3505	1
R23	RESISTOR, fixed, composition: 51, 000Ω ±5% ½W. . 375 in. lg by . 140 in. dia, insulated; 2 axial wire lead terminals spec no. MIL-R-11B.	Series attenuating resistor	R23	RC20GF513J						5905-279-3496	1
R24	RESISTOR, fixed, composition. Same as R19.	Decoupling resistor									
R25	RESISTOR, fixed, composition: 4700Ω ±5% ½W; . 375 in. lg by . 140 in. dia, insulated; 2 axial wire lead terminals; spec no. MIL-R-11B.	Meter damping resistor	R25, R52, R60, R61, R76, R78	RC20GF472J						5905-279-3504	6
R26	RESISTOR, fixed, composition: Same as R19.	Series attenuating resistor									
R27	RESISTOR, fixed, composition: 12, 000Ω ±5% ½W; . 375 in. lg by . 140 in. dia, insulated; 2 axial wire lead terminals, spec no. MIL-R-11B.	Shunt attenuating resistor	R27	RC20GF123J						5905-279-3502	1

IDENTIFICATION TABLE OF PARTS FOR R1307A/GR RADIO RECEIVER

CONTRACTOR: RYCOM INSTRUMENTS — CONTRACT NO.: DA18-119-AMC-03406(X)

REF. SYM. OR PART NO. (1)	NAME OF PARTS AND DESCRIPTION (2)	FUNCTION (3)	ALL SYMBOLS AND PART NUMBERS INVOLVED (4)	JAN OR MIL TYPE NUMBER (5)	EQUIPMENT REPAIR PART KIT QUANTITIES PER SERVICE (6)					FEDERAL STOCK NUMBER (7)	TOTAL NUMBER PARTS PER END ITEM (8)
					ARMY	AF	NSA	NAVY	OTHER		
R28	RESISTOR, fixed, composition: 18,000Ω ±5% ½W, .375 in. lg by .140 in. dia, insulated; 2 axial wire lead terminals, spec no. MIL-R-11B.	Plate resistor	R28, R56	RC20GF183J						5905-270-3500	2
R29	RESISTOR, fixed, composition: 390Ω ±5% ½W; .375 in. lg by .140 in. dia, insulated; 2 axial wire lead terminals, spec no. MIL-R-11B.	Cathode resistor	R29	RC20GF391J						5905-279-1890	1
R30	RESISTOR, fixed, composition: 4700Ω ±5% ¼W, .250 in. lg by .090 in. dia, insulated, 2 axial wire lead terminals, spec no. MIL-R-11B.	Series attenuating resistor.	R30, R34	RC07GF472J						5905-686-3998	2
R31	RESISTOR, fixed, composition: 47,000Ω ±5% 1W; .562 in. lg by .225 in. dia, insulated; 2 axial wire lead terminals, spec no. MIL-R-11B.	Series attenuating resistor	R31, R99	RC32GF473J						5905-299-2013	2
R32	RESISTOR, fixed, composition: 1500Ω ±5% ¼W; .250 in. lg by .090 in. dia, insulated, 2 axial wire lead terminals, spec no. MIL-R-11B.	Shunt attenuating resistor	R32	RC07GF152J						5905-683-7723	1
R33	RESISTOR, fixed, composition: Same as R19.	Series attenuating resistor									
R34	RESISTOR, fixed, composition Same as R30	Shunt attenuating resistor									
R35	RESISTOR, fixed, composition: 10,000Ω ±5% ¼W, .250 in. lg by .090 in. dia, insulated; 2 axial wire lead terminals, spec no. MIL-R-11B.	Screen resistor	R35, R37, R42	RC07GF103J						5905-683-2238	3
R36	RESISTOR, fixed, composition. Same as R4	Cathode resistor									
R37	RESISTOR, fixed, composition: Same as R35	Screen resistor									

IDENTIFICATION TABLE OF PARTS FOR R1307A/GR RADIO RECEIVER

MANUFACTURED BY: RYCOM INSTRUMENTS — REVISED BY: DA18-119-AMC-03406(X)

REF. SYM. OR PART NO. (1)	NAME OF PARTS AND DESCRIPTION (2)	FUNCTION (3)	ALL SYMBOLS AND PART NUMBERS INVOLVED (4)	JAN OR MIL TYPE NUMBER (5)	EQUIPMENT REPAIR PART KIT QUANTITIES PER SERVICE (6)					FEDERAL STOCK NUMBER (7)	TOTAL NUMBER PARTS PER END ITEM (8)
					ARMY	AF	NSA	NAVY	OTHER		
R38	RESISTOR, fixed, composition: 47,000Ω ±5% ¼W; .250 in. lg by .090 in. dia, insulated; 2 axial wire lead terminals, spec no. MIL-R-11B.	Plate resistor	R38, R40	RC07GF473J						5905-683-2246	2
R39	RESISTOR, fixed, composition: 100,000Ω ±5% ¼W; .250 in. lg by .090 in. dia, insulated; 2 axial wire lead terminals, spec no. MIL-R-11B.	Grid resistor	R39	RC07GF104J						5905-686-3128	1
R40	RESISTOR, fixed, composition: Same as R38	Plate resistor									
R41	RESISTOR, fixed, composition: 820Ω ±5% ¼W; .250 in. lg by .090 in. dia, insulated; 2 axial wire lead terminals, spec no. MIL-R-11B.	Cathode resistor	R41	RC07GF821J						5905-686-3996	1
R42	RESISTOR, fixed, composition: Same as R35	Decoupling resistor									
R43	RESISTOR, fixed, composition: 82,000Ω ±5% ½W; .375 in. lg by .140 in. dia, insulated; 2 axial wire lead terminals, spec no. MIL-R-11B.	Series attenuating resistor	R43	RC20GF823J						5905-279-3494	1
R44	RESISTOR, fixed, composition: 15,000Ω ±5% ¼W; .250 in. lg by .090 in. dia, insulated; 2 axial wire lead terminals, spec no. MIL-R-11B.	Shunt attenuating resistor	R44	RC07GF153J						5905-681-8816	1
R45	RESISTOR, fixed, composition: 2,000,000Ω ±5% ½W; .375 in. lg by .140 in. dia, insulated; 2 axial wire lead terminals, spec no. MIL-R-11B.	Grid resistor	R45	RC20GF205J						5905-279-1875	1
R46	RESISTOR, fixed, composition: 150Ω ±5% ½W; .375 in. lg by .140 in. dia, insulated; 2 axial wire lead terminals, spec no. MIL-R-11B.	Emitter resistor	R46	RC20GF151J						5905-299-1541	1

IDENTIFICATION TABLE OF PARTS FOR R1307A/GR RADIO RECEIVER

CONTRACTOR: RYCOM INSTRUMENTS | CONTRACT NO.: DA18-119-AMC-03406(X)

REF. SYM. OR PART NO. (1)	NAME OF PARTS AND DESCRIPTION (2)	FUNCTION (3)	ALL SYMBOLS AND PART NUMBERS INVOLVED (4)	JAN OR MIL TYPE NUMBER (5)	EQUIPMENT REPAIR PART KIT QUANTITIES PER SERVICE (6)					FEDERAL STOCK NUMBER (7)	TOTAL NUMBER PARTS PER END ITEM (8)
					ARMY	AF	NSA	NAVY	OTHER		
R47	RESISTOR, fixed, composition: 160,000Ω ±5% ½W; .375 in. lg by .140 in. dia, insulated 2 axial wire lead terminals, spec no. MIL-R-11B.	Bias resistor	R47	RC20GF164J						5905-279-1871	1
R48	RESISTOR, fixed, composition: 1500Ω ±5% ½W; .375 in. lg by .140 in. dia, insulated; 2 axial wire lead terminals, spec no. MIL-R-11B.	Base resistor	R48	RC20GF152J						5905-279-1757	1
R49	RESISTOR, fixed, composition: 1200Ω ±5% ½W; .375 in. lg by .140 in. dia, insulated; 2 axial wire lead terminals, spec no. MIL-R-11B.	Series attenuating resistor	R49	RC20GF122J						5905-190-8880	1
R50	RESISTOR, fixed, composition: 820Ω ±5% ½W; .375 in. lg by .140 in. dia, insulated; 2 axial wire lead terminals, spec no. MIL-R-11B.	Shunt attenuating resistor	R50, R53	RC20GF821J						5905-279-2286	2
R51	RESISTOR, fixed, composition: 27,000Ω ±5% ½W; .375 in. lg by .140 in. dia, insulated; 2 axial wrie lead terminals, spec no. MIL-R-11B.	Series attenuating resistor	R51, R54, R71, R72	RC20GF273J						5905-279-3499	4
R52	RESISTOR, fixed, composition: Same as R25.	Collector resistor									
R53	RESISTOR, fixed, composition: Same as R50.	Emitter resistor									
R54	RESISTOR, fixed, composition: Same as R51.	Bias resistor									
R55	RESISTOR, fixed, composition: Same as R12.	Base resistor									
R56	RESISTOR, fixed, composition: Same as R28.	Isolating resistor									
R57	RESISTOR, fixed, composition: Same as R8.	Decoupling resistor									

Reverse (Page 52) Blank

IDENTIFICATION TABLE OF PARTS FOR R1307A/GR RADIO RECEIVER

CONTRACTOR: RYCOM INSTRUMENTS

CONTRACT NO.: DA18-119-AMC-03406(X)

REF. SYM. OR PART NO. (1)	NAME OF PARTS AND DESCRIPTION (2)	FUNCTION (3)	ALL SYMBOLS AND PART NUMBERS INVOLVED (4)	JAN OR MIL TYPE NUMBER (5)	EQUIPMENT REPAIR PART KIT QUANTITIES PER SERVICE (6)					FEDERAL STOCK NUMBER (7)	TOTAL NUMBER PARTS PER END ITEM (8)
					ARMY	AF	NSA	NAVY	OTHER		
R58	RESISTOR, fixed film: 1300Ω ±1%, ¼W at 70°C; temperature coefficient +200, -500 PPM/°C; .156 in. dia by .550 in. lg max; insulated; 2 axial wire leads; MIL equivalent RN60; Electra Mfg. Co. part no. MF5C-D-1301F.	Equalizing resistor	R58, R59								2
R59	RESISTOR, fixed, film: Same as R58.	Equalizing resistor									
R60	RESISTOR, fixed, composition: Same as R25.	Plate resistor									
R61	RESISTOR, fixed, composition: Same as R25.	Cathode resistor									
R62	RESISTOR, fixed, composition: Same as R3.	Grid resistor									
R63	RESISTOR, fixed, composition: 10,000Ω ±5% 1W; .562 in. lg by .225 in. dia, insulated; 2 axial wire lead terminals, spec no. MIL-R-11B.	Regulator dropping resistor	R63	RC32GF103J						5905-279-1719	1
R64	RESISTOR, fixed, composition: Same as R8.	Plate resistor									
R65	RESISTOR, fixed, composition: 100,000Ω ±5% ½W; .375 in. lg by .140 in. dia, insulated; 2 axial wire lead terminals, spec no. MIL-R-11B.	Grid resistor	R65, R80, R81, R87, R96	RC20GF104J						5905-195-6761	5
R66	RESISTOR, fixed, composition: 470Ω ±5% ½W; .375 in. lg by .140 in. dia, insulated; 2 axial wire lead terminals, spec no. MIL-R-11B.	Cathode resistor	R66	RC20GF471J						5905-192-3973	1
R67	RESISTOR, fixed, composition: 150,000Ω ±5% ½W; .375 in. lg by .140 in. dia, insulated 2 axial wire lead terminals, spec no. MIL-R-11B.	Series attenuating resistor	R67	RC20GF154J						5905-279-2522	1

IDENTIFICATION TABLE OF PARTS FOR R1307A/GR RADIO RECEIVER

CONTRACTOR: RYCOM INSTRUMENTS | CONTRACT NO.: DA18-119-AMC-03406(X)

REF. SYM. OR PART NO. (1)	NAME OF PARTS AND DESCRIPTION (2)	FUNCTION (3)	ALL SYMBOLS AND PART NUMBERS INVOLVED (4)	JAN OR MIL TYPE NUMBER (5)	EQUIPMENT REPAIR PART KIT QUANTITIES PER SERVICE (6)					FEDERAL STOCK NUMBER (7)	TOTAL NUMBER PARTS PER END ITEM (8)
					ARMY	AF	NSA	NAVY	OTHER		
R68	RESISTOR, fixed, composition: 39,000Ω ±5% ½W; .375 in. lg by .140 in. dia, insulated; 2 axial wire lead terminals, spec no. MIL-R-11B.	Shunt attenuating resistor	R68, R74	RC20GF393J						5905-279-3497	2
R69	RESISTOR, fixed, composition: 510,000Ω ±5% ½W; .375 in. lg by .140 in. dia, insulated 2 axial wire lead terminals, spec no. MIL-R-11B. Note: Below Ser. 401, R69 was 1,000,000Ω.	Decoupling resistor	R69, R88	RC20GF514J						5905-279-2516	2
R70	RESISTOR, fixed, composition: Same as R19.	Grid resistor									
R71	RESISTOR, fixed, composition: Same as R51.	Decoupling resistor									
R72	RESISTOR, fixed, composition: Same as R51.	Decoupling resistor									
R73	RESISTOR, fixed, composition: Same as R19.	Series attenuating resistor									
R74	RESISTOR, fixed, composition: Same as R68.	Plate resistor									
R75	RESISTOR, fixed, composition: Same as R9.	Cathode resistor									
R76	RESISTOR, fixed, composition: Same as R25.	AC cathode resistor									
R77	RESISTOR, fixed, composition: Same as R3.	Grid resistor									
R78	RESISTOR, fixed, composition: Same as R25.	Plate resistor									
R79	RESISTOR, fixed, composition: Same as R8.	DC cathode resistor									
R80	RESISTOR, fixed, composition: Same as R65.	Grid resistor									

Reverse (Page 54) Blank

IDENTIFICATION TABLE OF PARTS FOR R1307A/GR RADIO RECEIVER

CONTRACTOR: RYCOM INSTRUMENTS

CONTRACT NO.: DA18-119-AMC-03406(X)

REF. SYM. OR PART NO. (1)	NAME OF PARTS AND DESCRIPTION (2)	FUNCTION (3)	ALL SYMBOLS AND PART NUMBERS INVOLVED (4)	JAN OR MIL TYPE NUMBER (5)	EQUIPMENT REPAIR PART KIT QUANTITIES PER SERVICE (6) ARMY	AF	NSA	NAVY	OTHER	FEDERAL STOCK NUMBER (7)	TOTAL NUMBER PARTS PER END ITEM (8)
R81	RESISTOR, fixed, composition: Same as R65.	Grid resistor									
R82	RESISTOR, fixed, composition: Same as R8.	Grid current limiting resistor									
R83	RESISTOR, fixed, composition: Same as R8.	Grid current limiting resistor									
R84	RESISTOR, fixed, composition: Same as R8.	Screen resistor									
R85	RESISTOR, fixed, composition: 820Ω ±5% 2W; .688 in. lg by .312 in. dia, insulated; 2 axial wire lead terminals, spec no. MIL-R-11B.	Cathode resistor	R85	RC42GF821J						5905-279-2286	1
R86	RESISTOR, fixed, composition Same as R8.	Screen resistor									
R87	RESISTOR, fixed, composition: Same as R65.	Decoupling resistor									
R88	RESISTOR, fixed, composition: Same as R69.	Plate resistor									
R89	RESISTOR, fixed, composition: 2000Ω ±5% ½W; .375 in. lg by .140 in. dia, insulated; 2 axial wire lead terminals, spec no. MIL-R-11B.	Grid current limiting resistor	R89, R90	RC20GF202J						5905-190-8887	2
R90	RESISTOR, fixed, composition: Same as R89.	Grid current limiting resistor									
R91	RESISTOR, fixed, composition: 43,000Ω ±5% ½W; .375 in. lg by .140 in. dia, insulated; 2 axial wire lead terminals, spec no. MIL-R-11B.	Series attenuating resistor	R91	RC20GF433J						5905-279-3498	1
R92	RESISTOR, fixed, composition: 20,000Ω ±5% 1W; .562 in. lg by .225 in. dia, insulated; 2 axial wire lead terminals, spec no. MIL-R-11B.	Regulator dropping resistor	R92	RC32GF203J						5905-299-2021	1

IDENTIFICATION TABLE OF PARTS FOR R1307A/GR RADIO RECEIVER

CONTRACTOR: RYCOM INSTRUMENTS

CONTRACT NO.: DA18-119-AMC-03406(X)

REF. SYM. OR PART NO. (1)	NAME OF PARTS AND DESCRIPTION (2)	FUNCTION (3)	ALL SYMBOLS AND PART NUMBERS INVOLVED (4)	JAN OR MIL TYPE NUMBER (5)	EQUIPMENT REPAIR PART KIT QUANTITIES PER SERVICE (6)					FEDERAL STOCK NUMBER (7)	TOTAL NUMBER PARTS PER END ITEM (8)
					ARMY	AF	NSA	NAVY	OTHER		
R93	RESISTOR, fixed, composition: 68,000Ω ±5% ½W; .375 in. lg by .140 in. dia, insulated; 2 axial wire lead terminals, spec no. MIL-R-11B.	Shunt attenuating resistor	R93	RC20GF683J						5905-249-3661	1
R94	RESISTOR, fixed, composition: 33Ω ±5% 1W; .562 in. lg by .225 in. dia, insulated; 2 axial wire lead terminals, spec no. MIL-R-11B.	Cathode resistor	R94, R95	RC32GF330J						5905-279-1734	2
R95	RESISTOR, fixed, composition: Same as R94.	Cathode resistor									
R96	RESISTOR, fixed, composition: Same as R65.	Decoupling resistor									
R97	RESISTOR, fixed, composition: 330,000Ω ±5% ½W; .375 in. lg by .140 in. dia, insulated; 2 axial wire lead terminals, spec no. MIL-R-11B.	Shunt attenuating resistor	R97	RC20GF334J						5905-279-2519	1
R98	RESISTOR, fixed, composition: Same as R13.	Series attenuating resistor									
R99	RESISTOR, fixed, composition: Same as R31.	Regulator dropping resistor									
R201	RESISTOR, variable, composition element: 5000Ω ±30%, ½W; linear taper, enclosed case, 1.125 in. oa h by .938 in. w by .453 in. d; .25 in. dia shaft, .75 in. lg from mtg surface 3 solder lug terminals; bushing mtd 3/8-32 thd by .375 in. lg; RYCOM INSTRUMENTS part no. JF7539.	IF gain adjustment	R201							5905-879-7512	1
R202	RESISTOR, variable, composition element: 5000Ω ±30%, ½W; linear taper, enclosed case, 1.125 in. oa h by .938 in. w by .453 in. d; .250 in. dia shaft .500 in. lg from mtg surface; 3 solder lug terminals, bushing mtd 3/8-32 thd by .375 in. lg; RYCOM INSTRUMENTS part no. JF7540.	Calibration level adjustment	R202							5905-879-7514	1

Reverse (Page 56) Blank

IDENTIFICATION TABLE OF PARTS FOR R1307A/GR RADIO RECEIVER

CONTRACTOR: RYCOM INSTRUMENTS — CONTRACT NO.: DA18-119-AMC-03406(X)

REF. SYM. OR PART NO. (1)	NAME OF PARTS AND DESCRIPTION (2)	FUNCTION (3)	ALL SYMBOLS AND PART NUMBERS INVOLVED (4)	JAN OR MIL TYPE NUMBER (5)	EQUIPMENT REPAIR PART KIT QUANTITIES PER SERVICE (6) ARMY	AF	NSA	NAVY	OTHER	FEDERAL STOCK NUMBER (7)	TOTAL NUMBER PARTS PER END ITEM (8)
R203	RESISTOR, variable, composition element: 25,000Ω ±30%, ¼W; linear taper; enclosed case, .750 in. oa h by .625 in. w by .375 in. d; .125 in. slotted shaft .625 in. long from mtg surface; 3 printed circuit type solder lug terminals, bushing mtd ¼-32 thd by .250 in. lg; RYCOM INSTRUMENTS part no. NX9786.	Frequency control bias adjustment	R203								1
R204	RESISTOR, variable, composition element: 250,000Ω ±30%, ¼W; linear taper; enclosed case; 1.125 in. oa h by .938 in. w by .453 in. d; .250 in. dia shaft .750 in. lg from mtg surface; 3 solder lug terminals; bushing mtd 3/8-32 thd by .375 in. lg; RYCOM INSTRUMENTS part no. NB3152.	Audio level adjustment	R204							5905-908-5492	1
R205	RESISTOR, variable, composition element: 500,000Ω ±30%, ¼W; linear taper; enclosed case, 1.125 in. oa h by .938 in. w by .453 in. d; .250 in. dia shaft .750 in. lg from mtg surface, 3 solder lug terminals; bushing mtd 3/8-32 thd by .375 in. lg; RYCOM INSTRUMENTS part no. LF4337.	160 volt adjustment	R205							5905-908-5493	1
S1	SWITCH, rotary: 1 pole, 5 throw, 1 section; 30 degree positioning; 1 moving progressively shorting type contact, 7 fixed contacts; .35 amp at 500v ac max res current rating; silver plated contacts; 1-5/16 in. h by 1-5/16 in. w by 15/16 in. lg behind mtg surface; solder lug terminals; bushing mtg 3/8-32 thd by 3/8 in. lg; ¼ in. dia shaft by 7/8 in. lg from mtg surface; RYCOM INSTRUMENTS part no. 1307AS1.	Band selector switch	S1							5930-908-5489	1
S2	SWITCH, rotary: 2 pole, 4 throw, 2 section; 30 degree positioning; 2 non-shorting type and 2 progressively shorting moving contacts, 12 fixed contacts, .35 amp at 500v ac max res current rating; silver plated contacts; 1-5/16 in. h by 1-5/16 in. w by 2-1/8 in. lg behind mtg surface; solder lug terminals; bushing mtg 3/8-32 thd by 3/8 in. lg; ¼ in. dia shaft by 4-11/16 lg from mtg surface; RYCOM	Selectivity switch	S2							5930-908-5490	1

Reverse (Page 57) Blank

IDENTIFICATION TABLE OF PARTS FOR R1307A/GR RADIO RECEIVER

CONTRACTOR: RYCOM INSTRUMENTS | CONTRACT NO.: DA18-119-AMC-03406(X)

REF. SYM. OR PART NO. (1)	NAME OF PARTS AND DESCRIPTION (2)	FUNCTION (3)	ALL SYMBOLS AND PART NUMBERS INVOLVED (4)	JAN OR MIL TYPE NUMBER (5)	EQUIPMENT REPAIR PART KIT QUANTITIES PER SERVICE (6)					FEDERAL STOCK NUMBER (7)	TOTAL NUMBER PARTS PER END ITEM (8)
					ARMY	AF	NSA	NAVY	OTHER		
S2 cont'd.	INSTRUMENTS part no. 1307AS2.										
S3	SWITCH, rotary: 2 pole, 4 throw, 2 section; 30 degree positioning, 2 non-shorting type moving contacts; .35 amp at 500v ac max res current rating; silver plated contacts; spst switch, 3 amp 125v, operates to off in ccw position of control; 1-5/16 in. h by 1-5/16 in. w by 1-21/32 in. lg behind mtg surface; solder lug terminal, bushing mtg 3/8-32 thd by 3/8 in. lg; $\frac{1}{4}$ in. dia shaft 7/8 in. lg from mtg surface; RYCOM INSTRUMENTS part no. 1307AS3.	Meter switch	S3							5930-908-5488	1
S4	SWITCH, rotary: 6 pole, 5 throw, 3 section; 30 degree positioning; 6 shorting type moving contacts, 22 fixed contacts; .35 amp at 500v ac max res current rating; silver plated contacts; 1-5/16 in. h by 1-5/16 in. w by 1-7/8 in. lg behind mtg surface; solder lug terminals; bushing mtg 3/8-32 thd by 3/8 in. lg; $\frac{1}{4}$ in. dia shaft 7/8 in. lg from mtg surface RYCOM INSTRUMENTS part no. 1307AS4.	Monitor switch	S4							5930-908-5487	1
S5	SWITCH, toggle: spdt, 3 position, ON-OFF-On, 10 amp 250v ac; body 1-5/16 in. lg by 3/4 in. w by 1-1/16 in. h; bat actuator 11/16 in. lg from bushing end; 6 solder lug terminals; bushing mtg 15/32-32 thd by 15/32 in. lg; Arrow-Hart and Hageman Electric Co. part no. 82603.	Audio bandwidth switch	S5							5930-552-1946	1
S6	Switch, toggle: spst, 3 amp at 250v ac-dc; body 1-3/16 in. lg by $\frac{1}{2}$ in. w by 35/64 in. h; bat actuator 5/8 in. lg from bushing end; 2 solder lug terminals; bushing mtg 15/32-32 thd by 13/32 in. lg; Arrow-Hart and Hageman Electric Co. part no. 20994NV.	Speaker switch	S6							5930-259-8422	1

Reverse (Page 58) Blank

IDENTIFICATION TABLE OF PARTS FOR R1307A/GR RADIO RECEIVER

CONTRACTOR: RYCOM INSTRUMENTS | CONTRACT NO.: DA18-119-AMC-03406(X)

REF. SYM. OR PART NO. (1)	NAME OF PARTS AND DESCRIPTION (2)	FUNCTION (3)	ALL SYMBOLS AND PART NUMBERS INVOLVED (4)	JAN OR MIL TYPE NUMBER (5)	EQUIPMENT REPAIR PART KIT QUANTITIES PER SERVICE (6)					FEDERAL STOCK NUMBER (7)	TOTAL NUMBER PARTS PER END ITEM (8)
					ARMY	AF	NSA	NAVY	OTHER		
T1	TRANSFORMER, radio frequency: 2.215 mc IF, powdered iron slug tuned; aluminum case 2 in. lg by 15/16 in. w by 15/16 in. h; 6 solder lug terminals. 2 mtg studs 4-40 thd; RYCOM INSTRUMENTS part no. R10000.	IF transformer	T1, T2, T3							5950-757-9261	3
T2	TRANSFORMER, radio frequency: Same as T1.	IF transformer									
T3	TRANSFORMER, radio frequency: Same as T1.	IF transformer									
T4	TRANSFORMER, audio frequency: Push-pull output, primary 10,000Ω center tapped, 250v 75 madc; secondary no. 1, 600Ω at 10 watt and no. 2, 4Ω at 10 watt; response ±0.5 db 30 cycle to 25 kilocycle; hermetically sealed metal case 2-5/16 in. lg by 2-9/16 in. w by 3-5/16 in. h, 6 solder lug terminals; 4 mtg studs 8-32 thd; RYCOM INSTRUMENTS part no. 1307T4.	Audio output transformer	T4							5950-757-9262	1
T5	TRANSFORMER, power: 117v nom rms 48 ~ to 62 ~ primary rating; secondary no. 1, 6.3v rms at 7 amp, secondary no. 2, 300v rms; static shield connected to case and core, copper band around coil and core connected to case; hermetically sealed metal case 3-7/8 in. lg by 3-5/16 in. w by 4 in. h, 6 solder lug terminals, 4 10-32 mtg studs; RYCOM INSTRUMENTS part no. 1307T5.	Power transformer	T5							5950-757-9263	1
V1	ELECTRON TUBE: medium mu triode; RCA part no. 7586.	Video amplifier	V1, V2							5960-060-6613	2
V2	ELECTRON TUBE; Same as V1.	Mixer amplifier									
V3	ELECTRON TUBE: amplifier tube; spec no. MIL-E-1B; RCA part no. 12AU7.	Local oscillator and phase splitter	V3, V12, V13							5960-166-7663	3

Reverse (Page 59) Blank

IDENTIFICATION TABLE OF PARTS FOR R1307A/GR RADIO RECEIVER

CONTRACTOR: RYCOM INSTRUMENTS

CONTRACT NO.: DA18-111-AMC-03406(X)

REF. SYM. OR PART NO. (1)	NAME OF PARTS AND DESCRIPTION (2)	FUNCTION (3)	ALL SYMBOLS AND PART NUMBERS INVOLVED (4)	JAN OR MIL TYPE NUMBER (5)	EQUIPMENT REPAIR PART KIT QUANTITIES PER SERVICE (6)					FEDERAL STOCK NUMBER (7)	TOTAL NUMBER PARTS PER END ITEM (8)
					ARMY	AF	NSA	NAVY	OTHER		
V4	ELECTRON TUBE: miniature sharp cutoff pentode; General Electric Co. part no. 6661/6BH6 or 6BH6.	1st IF amplifier	V4, V6							5960-854-3362	2
V5	ELECTRON TUBE: miniature rf amplifier pentode, remote cutoff, spec no. MIL-E-1B, RCA part no. 6BJ6.	2nd IF amplifier	V5							5960-188-6589	1
V6	ELECTRON TUBE: Same as V4.	3rd IF amplifier									
V7	ELECTRON TUBE: high mu triode, nuvistor type; RCA part no. 6CW4.	IF buffer amplifier	V7, V11							5960-956-8414	2
V8	ELECTRON TUBE: high mu triode and sharp cutoff pentode; RCA part no. 6AW8A.	Limiter amplifier and	V8							4935-072-0536	1
V9	ELECTRON TUBE: beam deflection tube; RCA part no. 7360.	Product detector	V9							5960-812-9874	1
V10	Not used										
V11	ELECTRON TUBE: Same as V7.	Injection oscillator									
V12	ELECTRON TUBE: Same as V3.	Discriminator cathode follower									
V13	ELECTRON TUBE: Same as V3.	Audio amplifier and phase splitter									
V14	ELECTRON TUBE: beam power amplifier; spec no. MIL-E-1B; RCA part no. 6AQ5.	Audio output amplifier	V14, V15							5960-166-7673	2
V15	ELECTRON TUBE: Same as V14.	Audio output amplifier									
V16	ELECTRON TUBE: sharp cutoff pentode; RCA part no. 6AU6.	Regulator amplifier	V16							5960-556-1328	1
V17	ELECTRON TUBE: voltage regulator tube; RCA part no. OC2.	Regulator reference	V17							5960-864-7516	1

Reverse (Page 6C) Blank

IDENTIFICATION TABLE OF PARTS FOR R1307A/GR RADIO RECEIVER

CONTRACTOR: RYCOM INSTRUMENTS

CONTRACT NO.: DA18-119-AMC-03406(X)

REF. SYM. OR PART NO. (1)	NAME OF PARTS AND DESCRIPTION (2)	FUNCTION (3)	ALL SYMBOLS AND PART NUMBERS INVOLVED (4)	JAN OR MIL TYPE NUMBER (5)	EQUIPMENT REPAIR PART KIT QUANTITIES PER SERVICE (6)					FEDERAL STOCK NUMBER (7)	TOTAL NUMBER PARTS PER END ITEM (8)
					ARMY	AF	NSA	NAVY	OTHER		
V18	ELECTRON TUBE: twin triode, Tung Sol part no. 6080.	Regulator	V18							5960-262-0180	1
VC1	SEMICONDUCTOR device, diode: Silicon 5 to 50 uuf voltage variable capacitor, 70v dcw max; hermetically sealed glass and metal case, .125 in. dia by .300 in. lg max, 2 axial wire lead terminals; TRW Semiconductors Inc. part no. TRW V20E.	Frequency control device	VC1, VC2							5961-909-8579	2
VC2	SEMICONDUCTOR device, diode: Same as VC1.	Frequency control device									
WA	CABLE ASSEMBLY, power electric: Three conductors, ea 16 strands of no. 30 AWG copper wire; rubber insulation, one ea white, green, black; with black rubber outer jacket type SJ; 8 feet oa length; one end has connector plug, three male contacts, 2 parallel and one round (for gnd ac power outlet); other end has MS series connector plug with 3 small female contacts; RYCOM INSTRUMENTS part no. 1307AWA.	Connect R1307A/GR to power source	WA								1
Y1	CRYSTAL UNIT, quartz: For oscillator, one plate 250,000 cps: body 3/4 in. lg by 5/16 in. w by 3/4 in. h; mtg, two $\frac{1}{4}$ in. lg terminal pins spaced .486 in. c to c; MIL-C-3098C, part no. CR-46A/U-250.0000 KC.	Calibrate oscillator frequency control	Y1	CR-46A/U-250.0000KC						5955-912-5963	1
Y2	CRYSTAL UNIT, quartz: For oscillator, one plate 2216.5 KC; body 3/4 in. lg by 5/16 in. w by 3/4 in. h; mtg, two $\frac{1}{4}$ in. lg terminal pins spaced .486 in. c to c; MIL-C-3098B, part no. CR-18/U-2216.	USB injection frequency control	Y2	CR-18/U-2216.500KC						5955-905-3382	1
Y3	CRYSTAL UNIT, quartz: For oscillator, one plate 2213.5 KC; body 3/4 in. lg by 5/16 in. w by 3/4 in. h; mtg, two $\frac{1}{4}$ in. lg terminal pins spaced .486 in. c to c; MIL-C-3098B, part no. CR-18/U-2213.500KC.	LSB injection frequency control	Y3	CR-18/U-2213.500KC						5955-912-5968	1

Reverse (Page 61) Blank

IDENTIFICATION TABLE OF PARTS FOR R1307A/GR RADIO RECEIVER

CONTRACTOR: RYCOM INSTRUMENTS

CONTRACT NO.: DA18-119-AMC-03406(X)

REF. SYM. OR PART NO. (1)	NAME OF PARTS AND DESCRIPTION (2)	FUNCTION (3)	ALL SYMBOLS AND PART NUMBERS INVOLVED (4)	JAN OR MIL TYPE NUMBER (5)	EQUIPMENT REPAIR PART KIT QUANTITIES PER SERVICE (6)					FEDERAL STOCK NUMBER (7)	TOTAL NUMBER PARTS PER END ITEM (8)
					ARMY	AF	NSA	NAVY	OTHER		
NONE	BD, PRINTED CKT: Glass epoxy material, 1/16 in. thk by 3-23/32 in. w by 4-11/16 in. lg, 2 oz copper strips tin plated, RYCOM INSTRUMENTS part no. 1307APC1.	Local Osc-Mixer component mtg board								5909-908-5496	1
NONE	ASSEMBLY, tuning: Continuous positioning, 180° pointer rotation, selector knob actuated 12 to 1 ratio; 6-$\frac{1}{2}$ in. h by 7-3/4 in. w by 5-5/8 in. d; RYCOM INSTRUMENTS pt. no. 3024-12.	Rotates local OSC tuning capacitor & frequency dial pointer. 48 or 12 to 1 reduction knob operated.									1
NONE	KNOB: Round with spinner, no skirt; 2-3/8 in. d by 7/8 in. h without spinner; spinner 7/16 in. d by 19/32 in. h; drilled for $\frac{1}{4}$ in shaft; two set screws, thermosetting plastic, black dull finish: Kurz-Kasch, Inc. pt. no. SCH-310-3-BB-40806-595.	Rotates tuning assembly.									1
NONE	SPRING: Conical, 3-5/8 coil .031 GALV MB spring wire .56 in. major d, .33 in. minor d by .375 in. h; RYCOM INSTRUMENTS pt. no. 3052-12.	Keeps transmission in 4 to 1 gear ratio in normal condition.									1
NONE	TRANSMISSION, mechanical: direct drive or 4 to 1 speed reduction $\frac{1}{4}$ in. dia by 21/32 in. lg drive shaft; 5/16 in. pitch dia by $\frac{1}{4}$ in. width of face driven spur gear; 20 teeth, brass case $1\frac{1}{4}$ in. lg by $1\frac{1}{2}$ in. w by 1-1/16 h less shaft; RYCOM INSTRUMENTS pt. no. 154-13A.	Provides direct drive or 4 to 1 reduction for frequency tuning.								3010-908-5495	1
NONE	CASE: Cast brass housing, 1-$\frac{1}{2}$ in. lg by 1-$\frac{1}{2}$ in. w by 1 in. h; RYCOM INSTRUMENTS pt. no. 154-13-1.	Housing for transmission gears one side open									1
NONE	COVER: Brass; 1-$\frac{1}{2}$ in. lg by 1-$\frac{1}{2}$ in. w by 3/32 3/32 in. h, includes oilite bearing for $\frac{1}{4}$ in. shaft; RYCOM INSTRUMENTS pt. no. 154-13-2A.	Cover for transmission case.									1
NONE	PINION, drive: Steel with black oxide finish, 20 teeth, .312 PD, by .105 lg; .250 in. dia shaft by .983 lg overall; RYCOM INSTRUMENTS; pt. no. 154-13-5A.	Couples knob to idler or driven gear for 4 to 1 ratio or direct drive.									1

Reverse (Page 62) Blank

IDENTIFICATION TABLE OF PARTS FOR R1307A/GR RADIO RECEIVER

CONTRACTOR: RYCOM INSTRUMENTS | CONTRACT NO.: DA18-119-AMC-03406(X)

REF. SYM. OR PART NO. (1)	NAME OF PARTS AND DESCRIPTION (2)	FUNCTION (3)	ALL SYMBOLS AND PART NUMBERS INVOLVED (4)	JAN OR MIL TYPE NUMBER (5)	EQUIPMENT REPAIR PART KIT QUANTITIES PER SERVICE (6)					FEDERAL STOCK NUMBER (7)	TOTAL NUMBER PARTS PER END ITEM (8)
					ARMY	AF	NSA	NAVY	OTHER		
NONE	GEAR, idler: Assy. of 20 tooth pinion and 40 tooth gear; pinion .312 PD, by 37/64 lg, steel with black oxide finish; gear .625 PD; RYCOM INSTRUMENTS pt. no. 154-13-21.	Couples pinion to driven gear for 4 to 1 ratio.									1
NONE	GEAR, driven: Assy. of 20 tooth pinion and 40 tooth gear; pinion .312 PD by 1.15 in. lg, steel with black oxide finish; gear .625 PD; RYCOM INSTRUMENTS pt. no. 154-13-22.	Couples pinion or idler to spur gear.									1
NONE	COVER, dial assy: 7.813 in. lg by 6.5 in. w by 1.0 in. h; three 3/16 in. dia mtg holes; black high impact plastic with clear window; RYCOM INSTRUMENTS pt. no. 3029-22.	Protects tuning drive assy. and provides window for viewing frequency scale.									1
NONE	SCALE, dial: 5 band, 0-820 KC, black printing on white: 3-15/32 in. h by 7-1/16 in. w by 1/32 thk; RYCOM INSTRUMENTS pt. no. 3035-5.	Indicates frequency setting.									1
NONE	WASHER, pointer: steel with Cadmium plate, 14-2 iridite finish; 7/8 in. OD, 9/32 in. ID by .03 in. thk. RYCOM INSTRUMENTS pt. no. 3025-5.	Holds pointer in place on spur gear.									1
NONE	POINTER, dial: Steel drill rod, .016 in. dia by 3.375 in. lg; red flourescent paint; RYCOM INSTRUMENTS part no. 3025-6.	Indicates frequency on frequency scale.								5355-886-4692	1
NONE	GEAR, spur: Brass with hub, 240 teeth; 3.750 in. pitch dia; .125 in. width of face; .250 in. dia bore; with two 6-32 threaded holes in hub; RYCOM INSTRUMENTS part no. 3032-2.	Couples transmission to frequency tuning capacitor and pointer.								3020-879-8734	1
XDS1	SOCKET, lamp: Miniature bayonet base; 2 solder lug terminals; 7/16 in. w by 5/8 in. h by 1-3/8 in. lg; one 9/64 in. mtg. hole; Leecraft Mfg. Co. pt. no. 7-08.	Holds dial lamp.									2

Reverse (Page 63) Blank

IDENTIFICATION TABLE OF PARTS FOR R1307A/GR RADIO RECEIVER

CONTRACTOR: RYCOM INSTRUMENTS

CONTRACT NO.: DA18-119-AMC-03406(X)

REF. SYM. OR PART NO. (1)	NAME OF PARTS AND DESCRIPTION (2)	FUNCTION (3)	ALL SYMBOLS AND PART NUMBERS INVOLVED (4)	JAN OR MIL TYPE NUMBER (5)	EQUIPMENT REPAIR PART KIT QUANTITIES PER SERVICE (6)					FEDERAL STOCK NUMBER (7)	TOTAL NUMBER PARTS PER END ITEM (8)
					ARMY	AF	NSA	NAVY	OTHER		
XDS2	SOCKET, lamp: Same as XDS1.	Holds dial lamp.									
NONE	PLATE, back: Mtg plate for tuning assy. no. 3024-12, steel, Cadmium plated, 14-2 iridite finish; 7-3/8 in. w by 6 in. h by 1/8 in. thk; RYCOM INSTRUMENTS pt. no. 3025-1F.	Mounting plate for dial assembly parts.									1

Reverse (Page 64) Blank

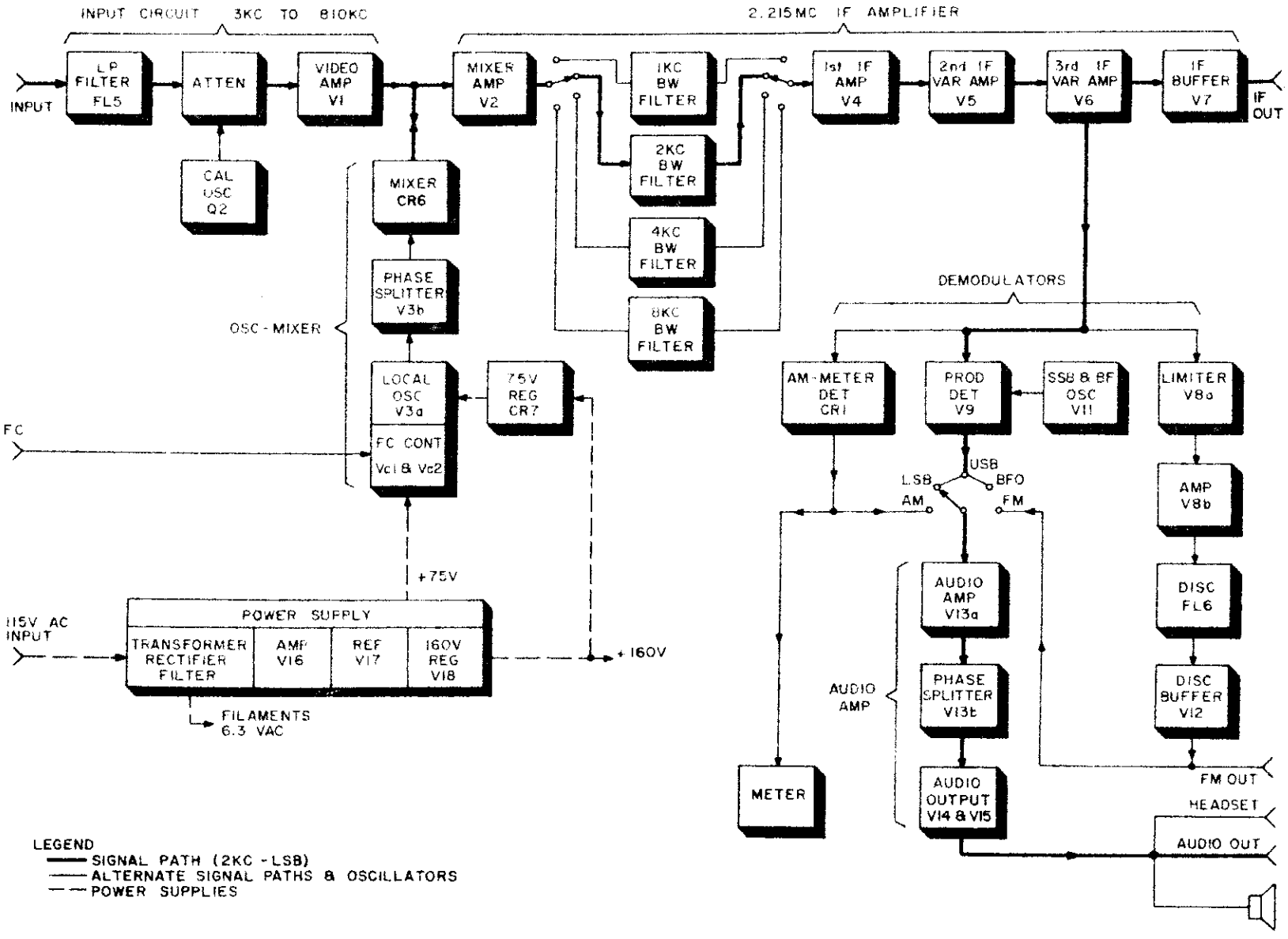

FIG. 1 BLOCK DIAGRAM, RI307A/GR RADIO RECEIVER

LAST USED-
C121, L22, R99

NOT USED-
P1, P3, V10, L9
C55, C79, C80, C104, C106, C83

ISSUE 1, 12-31-64
SER. NO. 201-400

ISSUE 2, 1-6-66
C66 WAS 270, CR6 MAY BE 2, IN3605'S
CR8-11 WAS CR8, FWB3008AS. R69 WAS 1M.
SER 401-500

ISSUE 3, 10-19-67
CR6 WAS IN4306
SER 501-625

ISSUE 4, 8-8-68
CR8 WAS CR8-11
SER 626-

NOTES

1. ALL CAPACITANCE IN UUF UNLESS SPECIFIED, ALL RESISTANCE IN OHMS.

2. ALL CONTROL AND CONNECTOR DESIGNATIONS UNDERLINED ON THIS DWG. APPEAR ON THE UNIT.

3. NOMINAL VALUE OF R33 & R34 LISTED. VALUE PICKED TO GIVE PROPER DISCRIMINATOR (FL6) RESPONSE.

TUBE SOCKET NUMBERING FOR V1, V2, V7, V11.

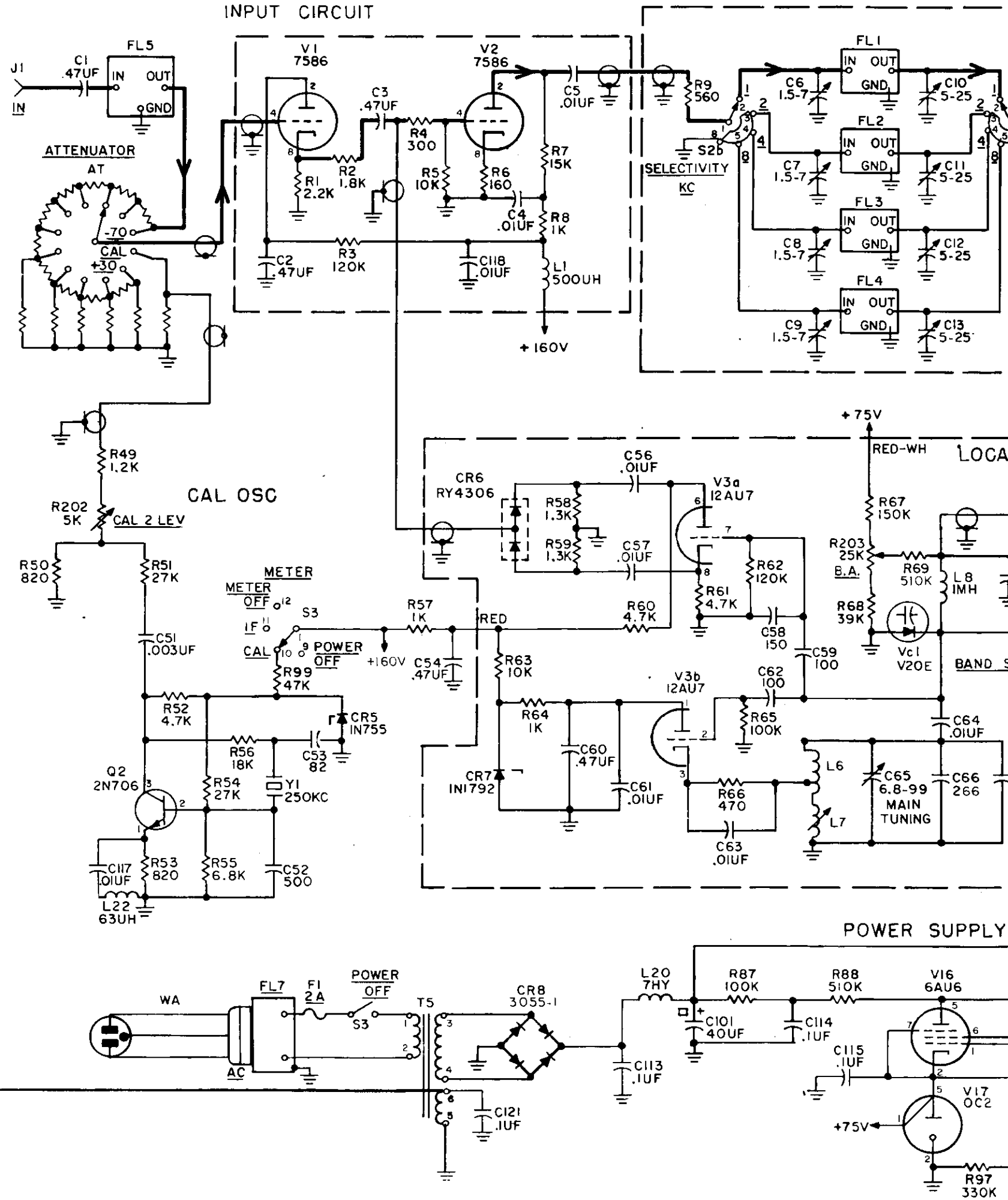

2.215MC IF AMPLIFIER

LIMITER AMPLIFIER

PRODUCT DETECTOR

IF BUFFER

AM-METER DETECTOR

CAL OSCILLATOR-MIXER

SSB & BF OSC

AUDIO AMPLIFIER

IF AMP ASSY

DEMODULATOR ASSY

S4 (KNOB VIEW)

FIG. 2 SCHEMATIC DIAGRAM, RI307A/GR RADIO RECEIVER