OPERATION AND MAINTENANCE MANUAL

for the

MODEL CX7

DELUXE INTEGRATED STATION

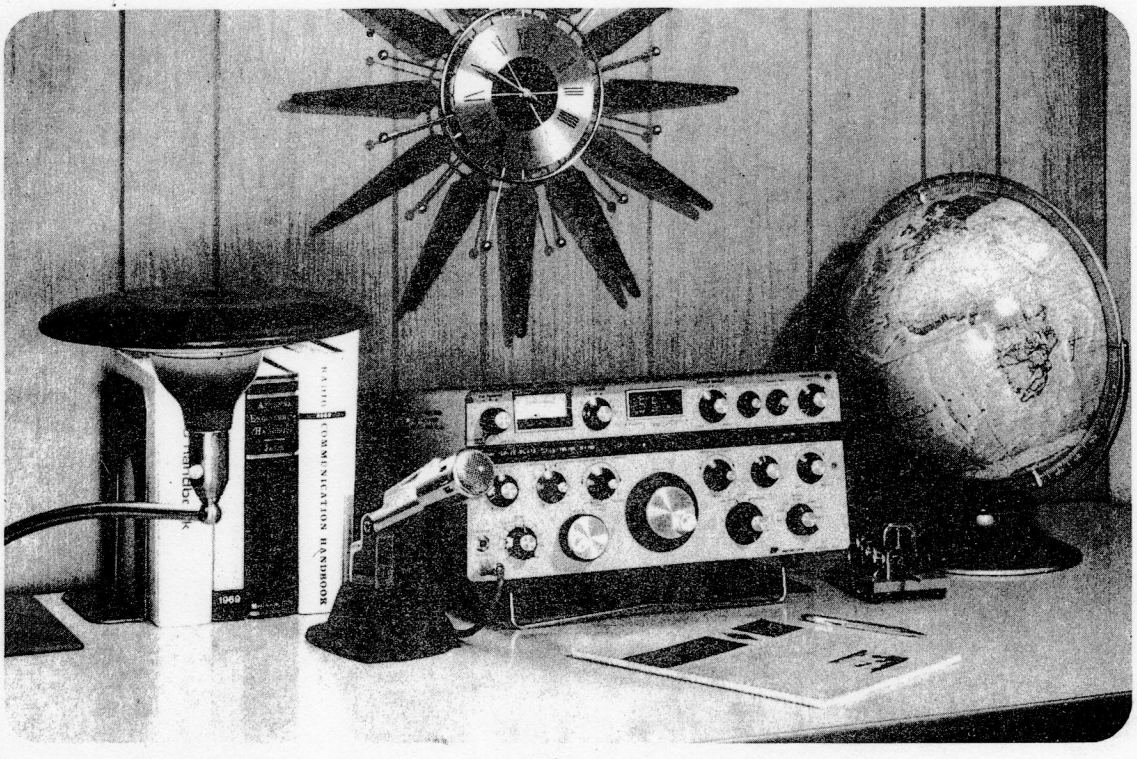

signal/one

OPERATION AND MAINTENANCE MANUAL

for the

MODEL CX7

DELUXE INTEGRATED STATION

NOVEMBER 1970

SIGNAL/ONE
A PRODUCT OF ECI
(AN NCR SUBSIDIARY)
1501 72ND STREET NORTH
ST. PETERSBURG, FLA. 33733

This page intentionally blank in original.

Scanned by Patrick Jankowiak KD5OEI

The original document was a 25 year old 2nd generation copy. We've done our best with it.

Contact information for this effort, and any other efforts at documenting and making freely available the manuals for the old laboratory classics, can be found at http://www.bunkerofdoom.com Please visit us.

Finally, this scan is provided free of charge to download. The original material, even though it is quite old, still belongs to the manufacturer, and it should be assumed there may still be a copyright. While we hope they will not mind home usage and sharing of the old manuals by electronics hobbyists who may own or wish to study the equipment, we insist that this material not be sold or bundled with any materials for sale (such as ebay, online stores, etc).

signal/one
A Subsidiary of COMPUTER MEASUREMENTS, INC.
1645 W. 135th STREET, GARDENA, CALIFORNIA 90249 • PHONE: (213) 532-9754

"IMPORTANT"

"READ BEFORE OPERATING!!!"

CONGRATULATIONS:

You have just acquired the most sophisticated piece of electronic communications equipment ever offered for use in ham radio.

We've never claimed that the CX7A "DELUXE INTEGRATED STATION" is a simple piece of equipment. It's complex, and like any complex unit it can deliver the maximum performance designed into it only when properly used.

PLEASE STUDY THE INSTRUCTION MANUAL BEFORE APPLYING POWER TO YOUR CX7A!

The CX7A is exceptionally rugged, but it is also a fine instrument and should not be abused unnecessarily. Should you by any chance experience difficulty in interpreting instructions in the manual or in securing normal performance from your CX7A, we hope that you will contact the factory directly for advice or clarification. We are located in Gardena, California, Area Code 213/532-9754.

To assure your protection under SIGNAL/ONE'S warranty, be sure to immediately fill in and mail the warranty registration card. We hope you won't require warranty service, but if you do both the SIGNAL/ONE factory repair department and our authorized distributors stand ready to serve you.

We are sure you will get a great deal of pleasure out of your new CX7A, and we'll be most happy to receive your comments after you have had the opportunity to become familiar with it.

signal/one
A Subsidiary of COMPUTER MEASUREMENTS, INC.
1645 W. 135th STREET, GARDENA, CALIFORNIA 90249 • PHONE: (213) 532-9754

INTERIM INFORMATION

Dear Customer:

Perusal of the manual as provided can eliminate serious damage to the radio; the tendency of the typical amateur radio operator to install and operate a complex piece of equipment without having read the manual is well known. A few words of caution before installation are entered on this sheet in the hope that it will call attention to particular errors frequently encountered.

First, the radio will not operate properly without installation of the auxiliary accessory plug. This plug, while intended to provide input/output connections for future accessories, does contain jumpers required for normal operation of the radio. When left disconnected, the symptoms are these: the frequency counter reads 900 on "A" VFO continuously, the RF gain control is inoperative and the meter functions do not work. Insertion of the auxiliary plug provided will cure this problem.

Secondly, several of the controls on the CX7A are unique; no other radio offered to the amateur provides these features and they warrant some special attention. First, the OUTPUT control provides variable output from less than 1 watt to full output at the twist of a knob. No matter how loudly you talk, to the unit, output will not be obtained unless the OUTPUT control is advanced from zero. Nominally, initial tune up should be effected by depression of the Tune button (after at least 60 seconds of warm-up) with the output control reduced to zero. Advancing the output control until a forward power of 150 watts (about 4 on the meter) is obtained, or until no further increase in output is noticed with increase in rotation of the control, will provide full power output from the CX7A. Returning to the PUSH TO TALK or VOX position and speaking into the microphone, advancement of the clipping control will provide this same peak power out in the sideband mode.

Third, neither the band switch nor the Broadband-Manual switch may be operated while power output is present from the CX7A. Doing so can result in a burned up switch which is a time-consuming repair job and not covered by the warranty as this is abuse of the radio. To avoid any possibility of this happening, be sure the PTT function switch is depressed and the microphone not keyed before changing bands or selecting Broadband-Manual operation.

Auxiliary connections on the rear of the unit are provided to key an external amplifier or antenna change-over relay. This set of contacts, when used in the CW mode with a power amplifier, will key the power amplifier relays on

each character, resulting in chattering. To prevent this, the TRANSMIT push-button parallels this set of contacts on the rear of the unit; when using the CX7A to drive a power amplifier that does not have the capability for full break-in operation, the transmit button should be depressed prior to the start of a transmission and released at the end of a transmission in order to hold the amplifier relays closed during transmission. An external foot switch may also be connected to the microphone PTT terminals for this purpose.

SIGNAL/ONE MODEL CX7A

IMPORTANT INSTALLATION, ADJUSTMENT AND OPERATING NOTES...

It is extremely important that a few basic procedures and precautions be observed in order to derive from your new CX7A the high level of performance designed into it, as well as to avoid damage to the power amplifier. PLEASE READ THE FOLLOWING TWO PAGES CAREFULLY, as well as the applicable portions of the instruction manual, before operating.

USING THE CX7A WITH A SEPARATE LINEAR AMPLIFIER

SSB: The inherent transmit-receive switching speed of the CX7A is necessarily extremely fast in order to permit full CX break-in operation. Typical relays used in high powered amplifiers, however, require up to 10 milliseconds or more to close. During the closing period, an open-circuit load is reflected back to the CX7A, resulting in very high momentary peak voltages which can damage the power amplifier or even the interconnecting coaxial cable fittings.

To avoid this problem in the CX7A during SSB (and AM) operation, a time delay of 10 milliseconds is introduced on the build-up of RF output after switching to "TRANSMIT" manually or by PTT or VOX operation. It is extremely important that the CX7A not be operated in the BROADBAND P. A. mode with a separate amplifier until it is determined that the amplifier's changeover relays complete closing within 10-12 ms. A monitor scope in the CX7A RF OUTPUT line will indicate existence of an excessively slow P. A. relay as follows: while feeding into the MIKE jack an audio tone sufficient to yield full transmitter output (or by whistling continuously into the mike), operate either the PTT switch on the mike or the CX7A manual TRANSMIT push-button. If the leading edge of the RF envelope appears smooth and slightly rounded, no problem exists. If a short "spike" appears, the amplifier relay is excessively slow and you should contact SIGNAL/ONE Customer Service for information on how to correct the problem.

CW: The CX7A operates full break-in on CW, with envelope rise and fall times on the order of 2-3 milliseconds. Any accompanying power amplifier must complete its internal relay closure within this period (which is generally impossible except for carefully selected vacuum-type relays), must be used with an electronic "T/R" switch, or must be manually switched before operating the key (as with a foot switch, for example).

ADJUSTMENT OF "CLIPPING" AND "OUTPUT" CONTROLS

CLIPPING: With the OUTPUT control full CCW (minimum) and CLIPPING meter button depressed, adjust the CLIPPING control until the meter just deflects off "O" on peaks while speaking in a normal voice. This set-up corresponds to approximately 5-10 db of RF clipping, which is appropriate for most operation under medium to strong signal conditions. To minimize background noise, it is highly desirable to use a good cardiod mike (such as the EV 664 or 674 or SHURE 545) and to close talk it. Under difficult conditions, transmitting effectiveness may be enhanced by increasing the CLIPPING control until the meter swings to half scale on occasional peaks. The use of more clipping than is required under any given circuit conditions will increase audio distortion, rather than intelligibility, at the receiver. For any given microphone and operator's voice, the setting of the CLIPPING control is quite consistent and non-critical, so that the knob setting for various degrees of CLIPPING may be once noted and then adjusted as required thereafter, without need to monitor the meter CLIPPING indication.

OUTPUT: With the CLIPPING control set for 5-10 db normal CLIPPING as described above, the OUTPUT control should be advanced (with the DRIVE METER BUTTON DEPRESSED) until the meter just deflects off "O" on peaks. It should not swing higher then " 1" on the upper meter scale under any conditions, and no benefit can ever be derived (except excessive background noise) by doing so. When EXTERNAL ALC is fed back from a separate power amplifier into the CX7A, the OUTPUT control should be turned only to the point of slight meter deflection described above with the linear in operation.

METER INDICATIONS UNDER NORMAL CX7A OPERATION

TUNE CONDITIONS: To determine if load SWR is sufficiently low to permit safe and efficient BROADBAND operation of the CX7A P. A., depress REV PWR push button and slowly increase OUTPUT control until meter indicates S-3 or fails to increase further with increased OUTPUT setting. Push FWD PWR button. If meter reads S-9 or greater (for REV PWR at or below S-3), BROADBAND operation will not damage the CX7A. NEVER OPERATE THE CX7A IN THE BROADBAND P. A. POSITION IF THE RATIO OF FWD PWR READING TO REV PWR READING IS LESS THAN

At full power output in TUNE, normal meter readings are:

CLIPPING:	0. (Deflects in) to S-9 range on peaks when transmitting voice, depending on CLIPPING setting).
DRIVE:	0 to S-3 (s-1 maximum on voice peaks).
PLATE:	2 to 3 (upper scale). (1.5 - 2.0 on voice peaks).
SCREEN:	0.5 to 2.0 (upper scale). (0 to 1.0 on voice peaks).

FWD PWR and REV PWR: See preceding paragraph.

BASIC CONTROL SET UP

CONTROL	SETTING
Broadband/Manual	Manual
PA Tuning	7-8
Loading	6-7
Keyer	Min
Spot Level	$\frac{1}{4}$ Range
Calibrate	In
FSK	Min
Preselector	1-2
Clipping	$2\frac{1}{2}$
Output	0
AGC	Slow
Meter	Plate
Transmit VFO	A
Control	PTT
Receive Channel	A
If Shift	0
Blanker	Off
RF Gain	10
Audio Gain	3
Mode	USB
AUX Ant Switch	Common
AC	On

With these control settings and an antenna attached 20 meter signals will be heard when VFO a is tuned through the proper range 14.00 to 14.35.

To transmit depress the tune button and advance the output control for a plate current reading of about 200 Ma. Tune the CX7A as you would any other transmitter. Always check the screen current; it should never exceed 1 on the black scale. Into a good antenna 0 or negative screen current is not uncommon in the tune up process. The CX7A output tunes very sharp so always recheck tuning after an adjustment to the output control or a drastic change in frequency.

It is also very important that the output control only be advanced until power

stops increasing. Advancing the output control further than necessary will degrade rather than improve performance.

After tuning up manually, if the reflected power is below 2 to 1, use the broadband position - do not switch the broadband manual switch with the CX7A keyed.

In broadband, again, only advance the output control until the power stops increasing.

TABLE OF CONTENTS

Paragraph		Page
	SECTION I	
	GENERAL DESCRIPTION	
1.1	INTRODUCTION	1-1
1.2	SPECIFICATIONS	1-4
1.2.1	General	1-4
1.2.2	Receiving System	1-4
1.2.3	Transmitting System	1-4
1.3	RECOMMENDED ACCESSORIES	1-5
1.4	OPTIONAL FILTERS AND CRYSTALS	1-5
1.5	PREPARATION FOR USE	1-5
1.5.1	Unpacking	1-5
1.5.2	Normal Operation Interconnections	1-5
1.5.3	Special Purpose Interconnections	1-6
1.5.3.1	Phone Patch Operation	1-6
1.5.3.2	FSK	1-6
1.5.3.3	Linear Amplifier	1-6
	SECTION II	
	OPERATING INSTRUCTIONS	
2.1	GENERAL	2-1
2.1.1	Operating Position	2-1
2.1.2	Operating Voltage	2-1
2.1.3	Operating Temperature	2-1
2.2	Controls, Connectors, and Indicators	2-1
2.3	Receive Mode Operating Procedures	2-1
2.3.1	General	2-1
2.3.2	Single Channel Receive Mode Operation	2-15
2.3.2.1	Operation of the "AGC" Switch	2-16
2.3.2.2	Operation of the "IF SHIFT" Control	2-16
2.3.2.3	Operation of the "BLANKER" Control	2-16
2.3.3	Dual Channel Receive Mode Operation	2-16
2.3.4	Calibration Using the "PULL TO CALIBRATE" Control	2-17
2.3.4.1	Compensation	2-17
2.3.4.2	Calibration Using "WWV"	2-17
2.3.4.3	Calibrating Internal 100 kHz Standard	2-17
2.4	Transmit Mode Operating Procedures	2-18
2.4.1	General	2-18
2.4.2	Tune Mode Operation	2-21
2.4.3	Normal Transmit Channel Operation	2-22
2.4.3.1	Operating with a VSWR Less than 1.5:1	2-22
2.4.3.2	Operating with a VSWR Exceeding 1.5:1	2-23
2.4.4	Single Sideband Transmission	2-23
2.4.4.1	Manual Keying	2-23
2.4.4.2	VOX-ANTI-VOX Keying	2-23
2.4.4.3	Operation of "CLIPPING" Control	2-24
2.4.5	AM Transmission	2-24

TABLE OF CONTENTS (CONTINUED)

Paragraph		Page
2.4.6	CW Transmission	2-24
2.4.6.1	Normal Telegraph Key Operation	2-24
2.4.6.2	Paddle Key Operation	2-24
2.4.6.3	Offset Channel Operation	2-25
2.4.7	FSK Mode	2-25
2.4.8	Linear Amplifier Operation	2-25
	SECTION III	
	THEORY OF OPERATION	
3.1	GENERAL	3-1
3.2	TRANSMITTER CIRCUITRY	3-2
3.2.1	Transmit Signal Path	3-2
3.2.2	Automatic Level Control	3-5
3.2.3	Sidetone	3-5
3.2.4	Transmitter Enabling	3-8
3.2.5	Transmit Control Switching	3-14
3.2.6	Automatic Keyer	3-14
3.3	RECEIVER CIRCUITRY	3-17
3.3.1	Receive Signal Path	3-17
3.3.2	Noise Blanker	3-21
3.3.3	Automatic Gain Control	3-21
3.3.4	Receiver Enabling	3-24
3.4	FREQUENCY MIXING NETWORK	3-24
3.4.1	Permeability Tuned Oscillator	3-25
3.4.2	Normal 34.2 MHz Source	3-25
3.4.3	Offset 34.2 MHz Oscillator	3-27
3.4.4	VFO Mixers	3-27
3.4.5	Actual Frequency Conversion	3-31
3.5	100 kHz OSCILLATOR	3-31
3.6	COUNTER	3-31
3.7	POWER SUPPLY	3-37
	SECTION IV	
	MAINTENANCE	
4.1	INTRODUCTION	4-1
4.2	PREVENTIVE MAINTENANCE	4-1
4.2.1	General	4-1
4.2.2	Cover Removal	4-1
4.2.3	Cleaning	4-1
4.2.4	Lubrication	4-1
4.2.5	Visual Inspection	4-1
4.3	TROUBLESHOOTING	4-5
4.3.1	General	4-5
4.3.2	Troubleshooting Techniques	4-5
4.4	CORRECTIVE MAINTENANCE	4-5
4.4.1	General	4-5

TABLE OF CONTENTS (CONTINUED)

Paragraph		Page
4.4.2	Obtaining Replacement Parts	4-29
4.4.3	Soldering Techniques	4-29
4.4.4	Component Replacement	4-30
4.4.4.1	Printed Circuit Board Replacement	4-30
4.4.4.2	Miscellaneous Part Replacement	4-34
4.4.4.3	Power Amplifier Tube Replacement	4-35
4.5	TROUBLESHOOTING AIDS	4-35
4.5.1	General	4-35
4.5.2	Location of Modules	4-35
4.5.3	Location of Electrical Parts and Terminals on Modules	4-35
4.5.4	Electrical Part Lead or Contact Identification	4-35
4.5.4.1	Chassis Wiring Color Code	4-36
4.5.5	Signal Tracing and Test Point Information	4-36
4.6	STRAPPING OPTIONS FOR 115/230 VAC OPERATION	4-45
4.6.1	115 Vac Operation	4-45
4.6.2	230 Vac Operation	4-45
4.7	OPTIONAL FILTER AND CRYSTAL INSTALLATION	4-45
4.7.1	Optional Filters	4-45
4.7.2	Optional Crystals	4-45

SECTION V

PERFORMANCE CHECK AND ALIGNMENT

5.1	GENERAL	5-1
5.2	PERFORMANCE CHECK	5-1
5.2.1	Transmitter	5-1
5.2.2	Receiver	5-1
5.3	ALIGNMENT PROCEDURES	5-2
5.3.1	Touch-Up Adjustments	5-2
5.3.2	Exact Frequency and Bandpass Adjustments	5-14
5.4	OPTIONAL FILTER AND CRYSTAL INSTALLATION CHECKOUT	5-22
5.4.1	Optional Filters	5-22
5.4.2	Optional Crystals	5-22

SECTION VI

WIRE RUN LIST AND SCHEMATIC DIAGRAMS

SECTION VII

ELECTRICAL PARTS LIST

Deluxe Integrated Station Model CX7	7-1
PTO Module A1	7-5
Front End Board A2	7-7
Power Supply Board A3	7-14
BFO Board A4	7-17
RF Driver Board A5	7-21

TABLE OF CONTENTS (CONTINUED)

Paragraph		Page
	Audio Board A6	7-26
	Counter Board A7	7-30
	IF Board A8	7-33
	AGC Detector Board A9	7-43
	Power Amplifier Assembly A10	7-48
	S2 Board A11	7-50
	Hi-Pass Filter Board A12	7-50
	Terminal Board Assembly TB1	7-50
	S3 Board A13	7-50

LIST OF ILLUSTRATIONS

Figure	Title	Page
1-1	Model CX7 Deluxe Integrated Station	1-1
1-2	Model CX7 Simplified Block Diagram	1-2
2-1	Model CX7 Front View	2-2
2-2	Model CX7 Rear View	2-3
2-3	Capacitor C31 Location	2-18
3-1	Block Diagram of Model CX7 Printed Circuit Boards	3-1
3-2	Transmit Signal Path Block Diagram	3-3
3-3	Automatic Level Control Simplified Schematic Diagram	3-6
3-4	Sidetone Simplified Schematic Diagram	3-7
3-5	T/R and R/T Command Simplified Schematic Diagram	3-8
3-6	T/R Distribution Block Diagram (Transmit Mode)	3-9
3-7	R/T Distribution Block Diagram (Transmit Mode)	3-10
3-8	VOX Keying Simplified Schematic Diagram	3-11
3-9	Manual Keying Simplified Schematic Diagram	3-12
3-10	Transmit Control Switching Simplified Schematic Diagram	3-13
3-11	Automatic Keyer Logic Block Diagram	3-15
3-12	"DOT" Generation Timing Diagram	3-15
3-13	"DASH" Generation Timing Diagram	3-16
3-14	Receive Signal Path Block Diagram	3-19
3-15	Noise Blanker Simplified Schematic Diagram	3-21
3-16	Automatic Gain Control Simplified Schematic Diagram	3-22
3-17	"SLOW" AGC Voltage Curve	3-23
3-18	"FAST" AGC Voltage Curve	3-23
3-19	Simplified Frequency Mixing Network Block Diagram	3-25
3-20	PTO Simplified Schematic Diagram	3-26
3-21	Normal 34.2 MHz Oscillator Simplified Schematic Diagram	3-26
3-22	Offset 34.2 MHz Oscillator Simplified Schematic Diagram	3-28
3-23	VFO Mixer Simplified Schematic Diagram	3-28
3-24	VFO Control Switching Simplified Schematic Diagram	3-29
3-25	100 kHz Oscillator Simplified Schematic Diagram	3-31
3-26	Simplified RF Counter Block Diagram	3-32
3-27	RF Counter Logic Block Diagram	3-33
3-28	RF Counter Timing Block Diagram	3-35
3-29	Power Supply Block Diagram	3-38
3-30	+15, -15 and +5 VDC Voltage Regulator Simplified Schematic Diagram	3-40
4-1	Model CX7 Top View	4-2
4-2	Model CX7 Bottom View	4-4
4-3	PTO Board	4-6
4-4	Front End Board	4-8
4-5	Power Supply Board	4-10
4-6	BFO Board	4-12
4-7	RF Driver Board	4-14
4-8	Audio Board	4-16
4-9	Counter Board	4-18
4-10	IF Board	4-20
4-11	AGC/Detector Board	4-22
4-12	TB1 Board	4-24
4-13	Hi-Pass Filter Board	4-25
4-14	S2 Board	4-26

LIST OF ILLUSTRATIONS (CONTINUED)

Figure		Page
4-15	S3 Board	4-27
4-16	Coupling Collars for Front End Board "MHZ" Selector Switch	4-30
4-17	PTO Terminals	4-31
4-18	Coupling Collar for IF Board "MODE" Selector Switch	4-32
4-19	Location of Screws Retaining Bottom of RF Driver Board	4-33
4-20	Power Amplifier Tube Removal	4-34
4-21	Strapping Option Pins Located on Power Supply Board	4-45
4-22	Installation Location for Optional Filters	4-46
4-23	Location of Sockets for Optional Crystals	4-47
4-24	Power Transformer Lead Identification	4-48
4-25	Location of Counter Assembly Terminals	4-48
4-26	Location of Parts in Upper PA Assembly	4-49
4-27	Location of Parts in Lower PA Assembly	4-50
4-28	Electrode Configuration for Semiconductor Devices	4-51
4-29	Switch Contact Identification	4-52
5-1	Location of R16 on Power Supply Board	5-2
5-2	Location of C30 on AGC Detector Board	5-3
5-3(a)	BFO Cover	5-4
5-3(b)	Location of C31 with BFO Cover Removed	5-4
5-4	Location of Front End Board Trimmers	5-5
5-5(a)	Location of Pin 405 on IF Board	5-6
5-5(b)	Location of C4, T3, and R43 on BFO Board	5-7
5-6	Location of AGC and "S" Meter Calibration Adjustments on AGC Detector Board	5-8
5-7	Location of Control Grid Fixed Bias and ALC Adjustments on RF Driver Board	5-9
5-8(a)	Location of Pin 501 on AGC Detector Board	5-10
5-8(b)	Location of R12 on Audio Board	5-10
5-9(a)	Location of Power Amplifier Assembly Adjustments	5-11
5-9(b)	Location of Power Amplifier Assembly Adjustments	5-12
5-9(c)	Location of Power Amplifier Assembly Adjustments	5-12
5-10	Reflectometer Adjustments	5-13
5-11(a)	Location of PTO Module Pin 3	5-14
5-11(b)	Location of C16 on PTO Board	5-14
5-12(a)	Location of Pins 487 and 495 on AGC Detector Board	5-15
5-12(b)	Location of Pin 500 and Access Hole on AGC Detector Board	5-16
5-13(a)	Location of Pin 487 on AGC Detector Board	5-16
5-13(b)	Location of Pins 407 and 405 on IF Board	5-17
5-13(c)	Location of Adjustment Holes on BFO Cover	5-17
5-14	Location of Pins and Adjustments on IF Board	5-18
5-15	Response Curve for 30.2 to 31.2 MHz Bandpass Adjustments	5-18
5-16(a)	Location of Pins and Adjustments on Front End Board	5-19
5-16(b)	Location of Pins and Adjustments on IF Board	5-20
5-16(c)	Location of L1 and L2 on RF Driver Board	5-21
5-17	Response Curve for the Transmit and Receive Bandpass Adjustments	5-21
5-18	Location of C56, C68, and C77 on Front End Board	5-23

LIST OF ILLUSTRATIONS (CONTINUED)

Figure		Page
6-1	Deluxe Integrated Station Model CX7 Schematic Diagram	6-13
6-2	PTO Module A1 Schematic Diagram	6-21
6-3	Front End Board A2 Schematic Diagram	6-23
6-4	Power Supply Board A3 Schematic Diagram	6-25
6-5	BFO Board A4 Schematic Diagram	6-27
6-6	RF Driver Board A5 Schematic Diagram	6-31
6-7	Audio Board A6 Schematic Diagram	6-35
6-8	Counter Board A7 Schematic Diagram	6-39
6-9	IF Board A8 Schematic Diagram	6-43
6-10	AGC Detector Board A9 Schematic Diagram	6-47
6-11	Power Amplifier Assembly A10 Schematic Diagram	6-49
6-12	S2 Board A11 Schematic Diagram	6-51
6-13	High Pass Filter Board A12 Schematic Diagram	6-53
6-14	S3 Board A13 Schematic Diagram	6-54

SECTION I

GENERAL DESCRIPTION

1.1 INTRODUCTION

The Signal/One Model CX7, shown in Figure 1-1, is a self-contained, deluxe integrated station, designed for the professional-amateur radio operator. The construction technique utilizes solid-state circuitry throughout, with the exception of the Nixie tubes and the transmitter power amplifier stage which is a ceramic-metal tube. The Model CX7 is capable of operation in the SSB, CW, FSK and compatible AM mode. Frequency coverage includes all the amateur bands between 1.8 and 29.7 MHz with provisions for accepting spare crystals permitting operation in the non-amateur frequencies from 2 to 3, 4 to 7, or 8 to 14 MHz. Two separate VFO's provide the capability of simultaneously receiving two separate frequencies within the same band and transmitting on either. Tuning to the precise frequency is accomplished by observing the arabic numerals being indicated by the Nixie tubes while adjusting the VFO control for the desired display. Included as standard equipment are the DIGITAL KEYER, VOX, and ANTI-VOX, NOISE BLANKER, RF CLIPPER, and METERING of all critical functions. In reviewing the Model CX7 capabilities it might be discovered that the deluxe integrated station contains features which the average amateur can not presently utilize. However, as operating experience is gained, these features will provide the means to attain professionalism and will prove to be required necessities. The space age technology exhibited in the construction and circuitry will enhance the value of the Model CX7 for many years. Its characteristics far surpass other equipment claiming to set a standard of performance. Numerous amateurs have stated that they would choose not to be active at all if they had to operate without their Model CX7. The complete capabilities can best be understood by reviewing this entire manual.

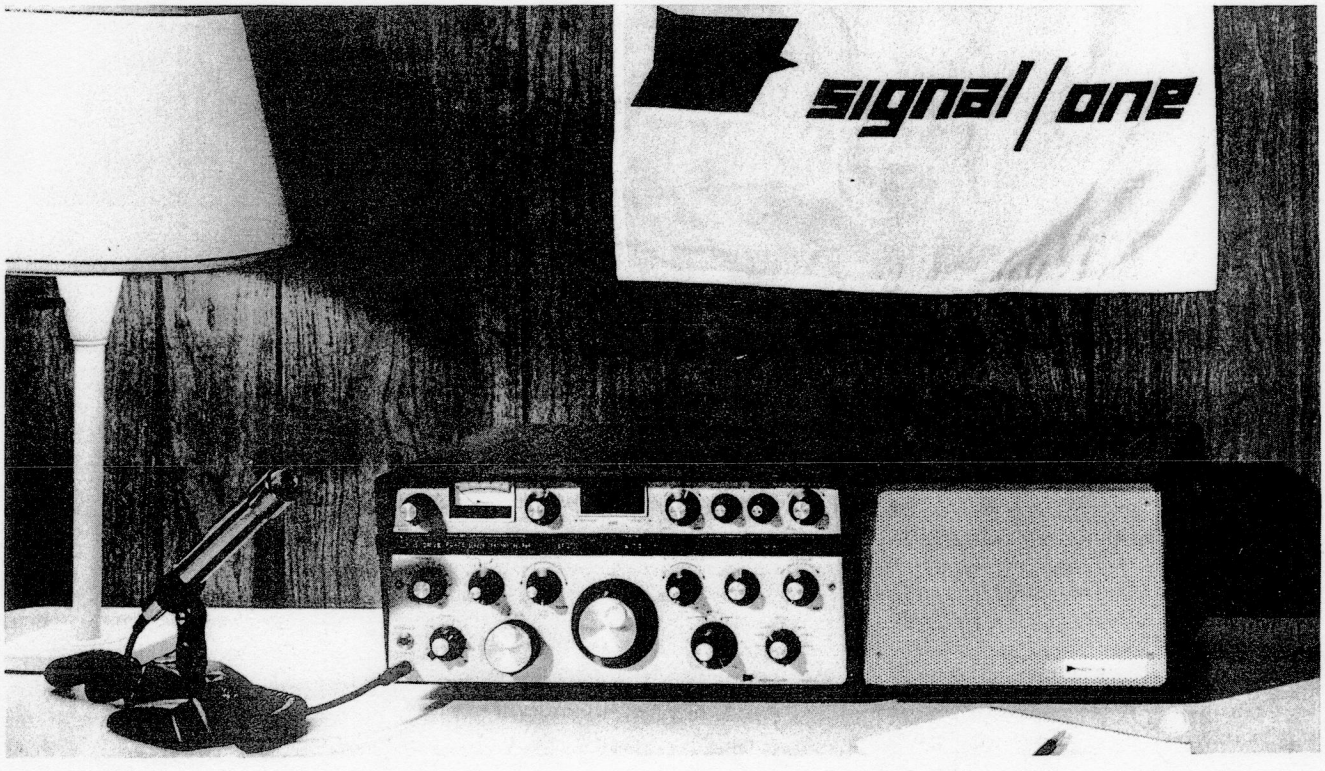

Figure 1-1. Model CX7 Deluxe Integrated Station

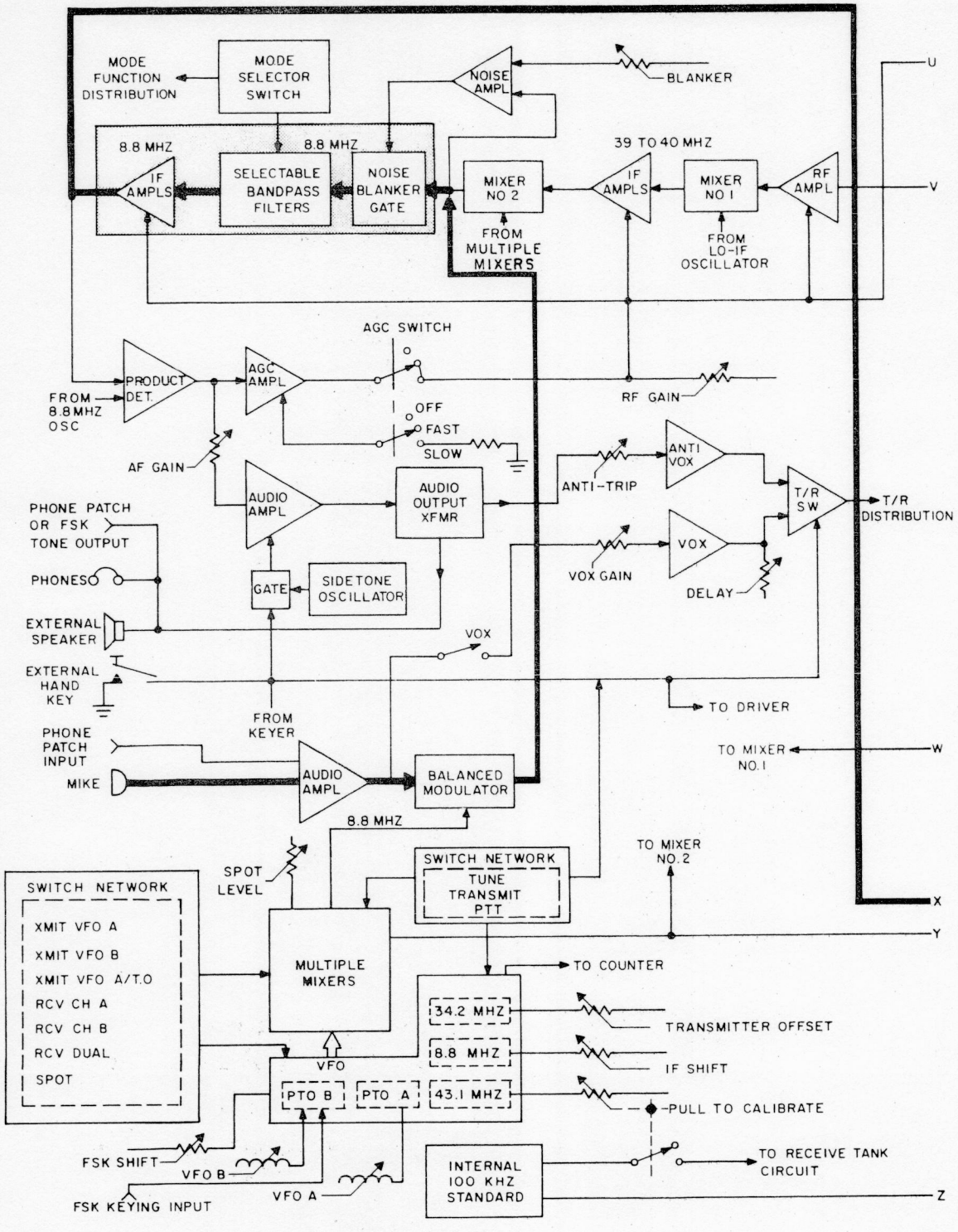

Figure 1-2. Model CX7 Simplified Block Diagram (Sheet 1 of 2)

A Simplified Block Diagram of the Model CX7 is shown in Figure 1-2. While it is not the intent of this section to cover the electronic theory of operation, the brief explanation that follows provides a basic concept that will aid in understanding the ensuing paragraphs: Stages that are common to both transmit and receive signal paths are shaded. The most common transmit signal path is depicted by the heavy, dark line. Where practical, operating switches and controls are shown with their interfacing stage. Transmit/Receive (T/R) command signals are used to disable the operation of circuits that are not desired for a specific mode. The circuitry beyond the

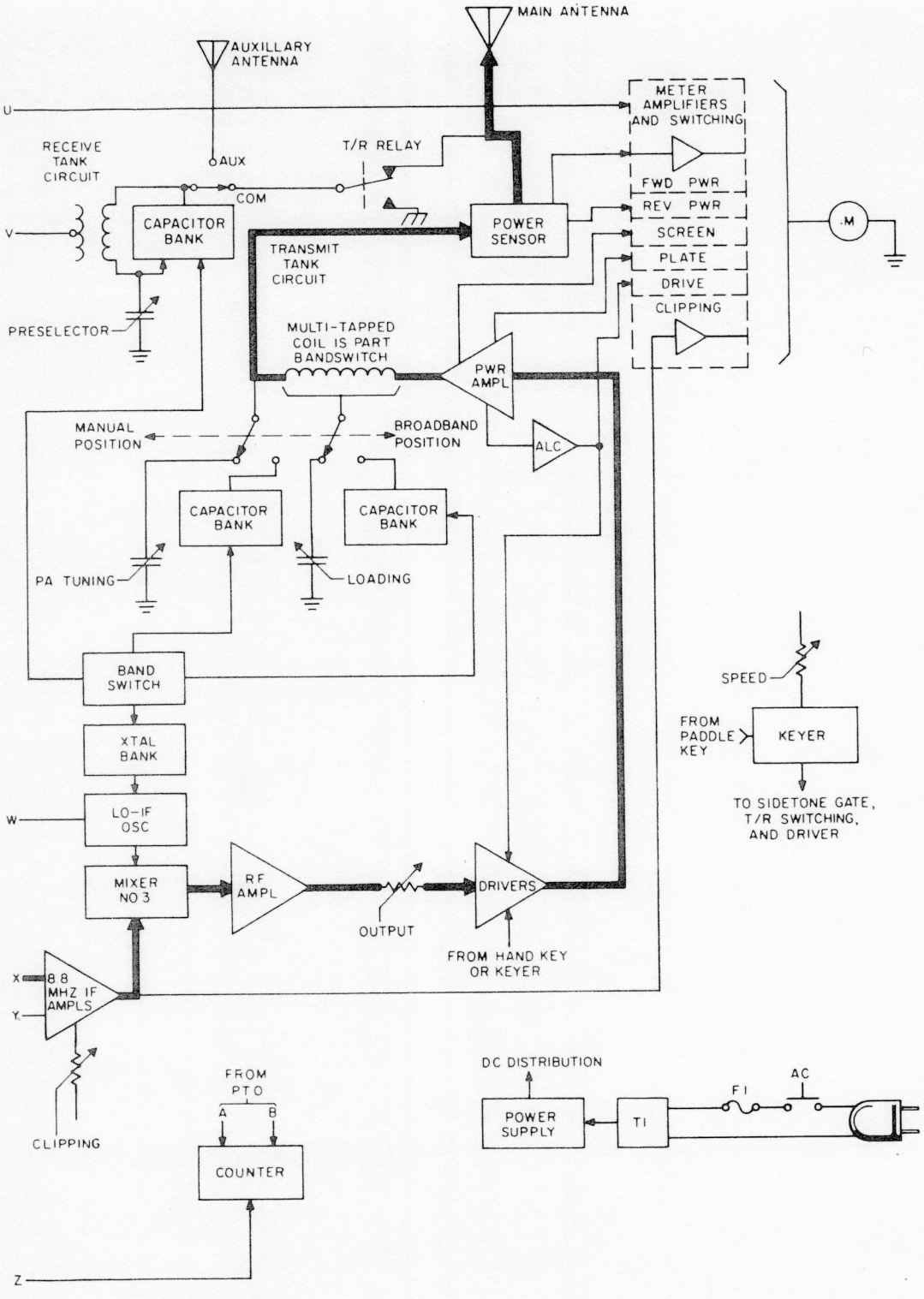

Figure 1-2. Model CX7 Simplified Block Diagram (Sheet 2 of 2)

output of mixer no.3 is broadband and operating at the actual transmit frequency. The receiver portion utilizes double conversion with 39 to 40 MHz and 8.8 MHz IF. Sideband, CW, and compatible AM demodulation is derived from the product detector. A VFO is comprised of a permeability tuned oscillator (PTO) and a 34.2 MHz oscillator. The scheme in which the VFO's and multiple mixers are utilized establishes the versatility of the Model CX7. Therefore, the majority of the switches and controls are centered around these stages. A detailed explanation of circuits is covered in Section 3.

1.2 SPECIFICATIONS

1.2.1 General

a. Frequency Coverage. All amateur bands 1.8 to 30.0 MHz in full 1 MHz ranges. An additional 1 MHz band may be added in each of the three ranges, 2.0 to 3.0, 4.0 to 7.0, and 8.0 to 14.0 MHz, by installing appropriate crystals.

b. VFO's. Two identical, permeability-tuned precision oscillators: 1 MHz tuning range with nominal 25 kHz per knob revolution.

c. Readout. Accuracy, linearity, and resettability to 100 Hz at any point in any band after calibration at any 100 kHz checkpoint in that band. Integrated circuit digital frequency counter with miniature, high-intensity long-life Nixie display instantly shows actual frequency being received or transmitted.

d. Spotting. Push button provides audio beat note for spotting when using separate VFO's or Transmit Offset/Transceive Mode.

e. T/R Switching. Push-to-talk or fast-attack VOX; instantaneous break-in CW; fast key-up receiver recovery independent of AGC decay. Isolated terminals for control of external amplifier.

f. CW Keyer. Built-in electronic keyer, 5 to 60 wpm. Separate jacks for keyer paddle and manual key.

g. Frequency Control Modes. Transceive with either VFO, "split" using both VFO's, transceive on either VFO plus independent receive-only on the other, or "Transmit Offset" transceive (transmit frequency tracks receiver and may be instantly offset up to plus or minus 3 kHz from receive frequency).

h. Emission Modes. SSB, CW, FSK, compatible AM.

i. Power Supply. Built-in heavy-duty supply for 115/230 volts, 50 to 400 Hz. Silectron transformer for exceptional regulation and power with very small size and weight. Requires approximately 100 watts receive, 400 watts peak at full input.

j. Construction. All critical circuitry (except P.A. and large power supply components) is modular on glass epoxy etched circuit boards.

k. Size and Weight. 16-1/4"W, x 7-1/4"H, x 14" deep overall, less feet. 35 pounds.

1.2.2 Receiving System

a. Active Devices. 16 digital integrated circuits, 14 linear integrated circuits, 100 transistors (both bipolar and MOS FET) one ceramic metal P.A. tube.

b. Sensitivity. Better than 10 db signal-plus-noise-to-noise ratio for 1/3 microvolt input at 10 meters (2 kHz bandwidth).

c. Selectivity. Standard (SSB) - 2 kHz at -6 db, 1.5:1 (6:60 db) shape factor (two cascaded 8-crystal lattice filters). Optional: 1. Standard CW - 400 Hz with 4:1 shape factor; 2. Deluxe CW - 300 Hz with 2:1 shape factor; 3. Standard FSK - 1200 Hz with 2:1 shape factor (internal sockets provided for two optional filters).

d. Ultimate Attenuation. More than 60 db.

e. Image and IF Rejection. More than 60 db.

f. Internal Spurs. Less than 1 μv equivalent. (Except at 1.912 MHz.)

g. AGC. Fast attack with selectable 10 ms decay or 300 ms hang time; less than 6 db audio output change for signal level from 1 μv to 100 mv.

h. Front End Dynamic Range. A 10 microvolt desired signal will be modulated less than 10% by an unwanted 10,000 μv signal 10 kHz away modulated 30% at 400 Hz, or by a similar 100,000 μv signal 5% removed in frequency.

i. Audio Output. 1 watt.

j. IF Shift. Second IF adjustable up to plus or minus 2 kHz with respect to IF filter passband for interference rejection and receiver audio passband selection. Tracking error, zero.

k. Dual Receive. Two channels usable separately or simultaneously; continuously variable relative RF gain control. Either channel may be used for transceiving and the other for receive-only.

l. Noise Blanker. Pre-IF blanker with adjustable threshold.

1.2.3 Transmitting System

a. Tuning. Pretuned bandpass output filter requires no adjustment when feeding nominal 50-ohm resistive load in amateur bands: manual tuning and loading for out-of-band or high SWR operation. Driver broadband 1.8 to 30.0 MHz.

b. Power Amplifier. Solid-state, completely broad-band driver; rugged, ceramic-metal 8072 tetrode final amplifier conduction-coupled to massive extruded heat sink. 150 watts continuous dissipation rating at 25°C ambient.

c. Power Level. Nominal 300 watts PEP input, 150 watts PEP output all bands and modes below 28 MHz (130 watts above 28 MHz). Output continuously adjustable down to less than 1 watt.

d. Duty Cycle. Continuous at rated PEP input all modes.

e. Carrier and Unwanted Sideband Supression. 60 db.

f. Distortion. Third-order intermodulation products more than 30 db below each of two equal tones at full rated output.

g. Speech Processing. RF envelope clipper plus cascaded 8 pole crystal filters in SSB and compatible AM (USB with carrier) modes. Clipping adjustable 0 to 20 db nominal.

h. Metering. Clipping, drive level, plate and screen currents, forward and reflected RF power.

1.3 RECOMMENDED ACCESSORIES

a. Speaker. Only use the Signal/One Model CX7S speaker or one having the following characteristics:

1. Typical Size: 6 x 9 inches

2. Voice Coil: 3.2-ohm impedance

3. Magnet: 3.2-ounce Alnico V

4. Typical Rating: 8 watts

5. Frequency Range: 60 to 10,000 Hz or better.

b. Headphones

1. Impedance: Low

2. Frequency Range: 60 to 10,000 Hz or better.

c. Microphone. Only use the Signal/One Model CX7M microphone or one having the following characteristics:

1. Output Level: -57 db or better

2. Response: 60 to 10,000 kHz, or better

3. Impedance: High

4. Switching: With or without push-to-talk function.

d. Antenna. The Model CX7 is a deluxe integrated station of exceptional performance. It is designed for use with an antenna having an input impedance of 50 ohms. The use of random length wire antennas will degrade performance unless a good antenna coupler, with a 50-ohm output, is used. Do not use an antenna having a S.W.R. of more than 3:1.

1.4 OPTIONAL FILTERS AND CRYSTALS

The following optional filters and crystals may be purchased directly from Signal/One or Model CX7 distributors and can be installed by the Model CX7 owner following the instructions in paragraph 4.7 of Section IV.

a. Standard CW Filter: 400 Hz bandpass

b. Deluxe CW Filter: 300 Hz bandpass

c. Standard FSK Filter: 1200 Hz bandpass

d. "A" Frequency Crystal: Provides capability to operate between 2.0 and 3.0 MHz frequency.

e. "B" Frequency Crystal: Provides the capability to operate in either the 4.0 to 5.0, 5.0 to 6.0 MHz, or 6.0 to 7.0 MHz frequency range. (Specify which range when ordering.)

f. "C" Frequency Crystal. Provides the capability to operate in either the 8.0 to 9.0, 9.0 to 10.0, 10.0 to 11.0, 11.0 to 12.0, 12.0 to 13.0, or 13.0 to 14.0 MHz frequency range. (Specify which range when ordering.)

1.5 PREPARATION FOR USE

1.5.1 Unpacking. Carefully lift the transceiver out of the packing material and examine it for visible damage. If the transceiver has been damaged in shipment, save the box and packing material, and notify the transportation company. Check the tuning controls and switches for freedom of action. Be sure to remove the accessory jumper plug and the power cord and plug from the packing material also. Fill out and mail the warrantee registration card.

1.5.2 Normal Operation Interconnections

a. Connect the accessory plug and power plug, with cord, to the applicable rear panel connector.

NOTE

The supplied accessory plug must be connected at all times because it contains jumper wires vital for the operation of the Model CX7. Do not connect the power plug to an ac outlet until the operating instructions have been reviewed. For the remaining connections, only use the type of accessories that possess the recommended electrical characteristics. Refer to Table 1-1 for the required type of mating plugs.

b. Perform either of the following:

1. Connect the headphones to the front panel "PHONES" jack.

2. Connect the loudspeaker to the rear panel "SPKR" connector.

c. Perform one of the following:

1. Connect the microphone to the front panel "MIKE" jack.

2. Connect the hand telegraph key to the rear panel "EXT KEY" jack.

3. Connect the paddle key to the rear panel "KEYER" jack.

d. Connect the main antenna utilized for both transmitting and receiving to the "ANTENNA" connector located immediately below the rear panel threaded bolt and wing nut terminal.

e. Connect an earth ground to the rear panel threaded bolt and wing nut terminal.

f. If it is desired to utilize an auxillary antenna for only receiving (in addition to the main antenna), connect that antenna to the "RCVR" connector to the immediate left of the rear panel threaded stud and wing nut terminal.

1.5.3 Special Purpose Interconnections

CAUTION

Accomplish the following interconnections with the Model CX7 power cord disconnected from an ac outlet.

1.5.3.1 Phone Patch Operation

a. Connect the headphones or speaker, microphone, antenna and earth ground as described in paragraph 1.5.2.

b. Connect the phone patch transmit lines to the rear panel "PATCH" connector.

c. Connect the phone patch receive lines to the rear panel "POWER" plug audio output pins 4 and 5.

1.5.3.2 FSK

a. Connect the antenna and earth ground as described in paragraph 1.5.2.

b. Connect a common ground between the rear panel earth ground stud and all the applicable external equipment.

c. Connect the teletypewriter transmit lines as follows:

1. Connect one of the wires to any convenient common ground point, such as, the rear panel earth ground stud or the teletypewriter frame.

2. Connect the remaining transmit line to the Model CX7 rear panel "POWER" plug pin 9.

d. Connect the receive lines from an external FSK tone converter to the Model CX7 rear panel "POWER" plug audio output pins 4 and 5.

e. Perform the remaining interconnections as recommended by the manufacturer of the FSK tone converter being utilized.

1.5.3.3 Linear Amplifier

a. Connect the microphone or telegraph key, speaker or headphones, and earth ground as described in paragraph 1.5.2.

b. Connect a common ground between the rear panel earth ground stud and the linear amplifier.

c. Connect a coaxial cable between the rear panel main antenna connector and the linear amplifier RF input.

d. Connect a cable between the rear panel "RLY" connector and the linear amplifier keyline input. (A ground will be present whenever the Model CX7 is keyed for a transmit condition.)

e. Connect a cable between the rear panel "ALC" connector and the linear amplifier automatic load control output.

f. Perform the remaining interconnections as recommended by the manufacturer of the linear amplifier being utilized.

Connector	Type of Plug
PHONES	Switchcraft No. 255
MIKE	Military Type PJ-068
EXT KEY	Switchcraft No. 255
KEYER	Switchcraft No. 297
H.V.	E. F. Johnson No. 105-300
PATCH	RCA Standard Phono Type
HI-IF	RCA Standard Phono Type
LO-IF	RCA Standard Phono Type
L.O.	RCA Standard Phono Type
SPKR	RCA Standard Phono Type
RLY	RCA Standard Phono Type
RCVR	RCA Standard Phono Type
J19	RCA Standard Phono Type
ALC	RCA Standard Phono Type
ANTENNA	Military Type PL-259

Table 1-1. Required Type of Mating Plugs

SECTION II

OPERATING INSTRUCTIONS

2.1 GENERAL

To effectively use the Model CX7, the operation and capabilities of the deluxe integrated station must be known. This section describes the operation of front and rear panel controls and connectors and gives first time and general operating information. Do not attempt operation until this section has been completely reviewed and understood.

2.1.1 Operating Position. The operating position should be such that the heat radiation from the rear panel heat sink may rise in a direction away from the internal circuitry. The recommended operating position is to set the Model CX7 in a feet-down position or with the front end slightly elevated utilizing the bottom tilt-stand.

2.1.2 Operating Voltage. The Model CX7 was designed to be operated from either a 115 volt or 230 volt nominal voltage in accordance with specific power supply jumper wire connections. Unless otherwise requested by the purchasor, the Model CX7 is factory-wired for 115-volt operation. Conversion instructions are given in paragraph 4.6 of Section IV.

2.1.3 Operating Temperature. The Model CX7 is cooled, without the use of internal blowers, by thermal conduction. The rear panel heat sink and thermal cut-outs on the cover should not be obstructed in a manner that would restrict radiating heat to escape. The clearance provided by the bottom feet should be maintained. If possible, allow one inch of clearance on the top and sides and at least four inches in the rear. Continuous operation can be maintained at ambient air temperatures between 32°F and 122°F. At temperatures exceeding 80°F, it is recommended that air flow from a blower or fan be directed on the rear panel heat sink. The unit can be stored at ambient temperatures between -58°F and +122°F. After storage at temperatures beyond the operating limits, allow the chassis temperature to come within the operating limits before power is applied.

2.2 Controls, Connectors, and Indicators. Front or rear panel controls, connectors, and indicators used in operating the Model CX7 are shown in Figures 2-1 and 2-2 and described in Table 2-1. The descriptions given in the table are not intended to be operating instructions, but only a reference to determine the function of each item. The actual operating procedures are covered in paragraphs 2.3 through 2.4.6.

2.3 Receive Mode Operating Procedures

2.3.1 General. The following general instructions covered in paragraph 2.3.1a through g are stated for information purposes and should not be performed at this time. It is important that the operator be cognizant of these and other conditions covered herein before performing the actual turn-on specified in paragraph 2.3.2g. The basic steps for establishing the transmit mode are included so that the operator is aware of how to prevent accidently keying the transmitter.

a. Establishing a Transmit Mode. The transmit mode is defined as enabling the operation of all the transmitter circuits. This is sometimes referred to "keying the transmitter". Power output may or may not be present, consequently either a dummy load or an antenna should always be connected to the rear panel main antenna connector. The transmit mode can be established by remote command signals (a ground) from a microphone or telegraph key or by proper positioning of the front panel switches. Therefore, any of the following operations will establish a transmit mode:

1. Setting the "PUSH-TO-TALK" switch on the microphone to the "ON" or "TALK" position.

2. Depressing the telegraph key.

3. Depressing the front panel control "VOX" switch to the latched-in position and speaking into the microphone.

4. Depressing the front panel control "TRANSMIT" switch to the latched-in position.

5. Depressing the front panel control "TUNE" switch to the latched-in position.

b. Establishing a Receive Mode. The receive mode is defined as switching the Model CX7 out of the transmit mode and enabling the operation of all the receiver circuits. Like the transmit mode, the receive mode can also be established by remote keying command signals (switching from a ground to a constant open) and properly positioning a front panel switch. Unlike the transmit mode that could be established by performing any one of the five operations listed in paragraph a, the receive mode can only be established after all the following operations have been completed:

1. Positioning the "PUSH-TO-TALK" switch on the microphone to the "OFF" or "LISTEN" position (when the "VOX" switch latched-in).

2. Permitting the telegraph key to remain in the open circuit condition.

3. Depressing the front panel control "PTT" or "VOX" switch to the latched-in position which causes the "TRANSMIT" or "TUNE" switch to eject to the extended (out or off) position.

c. Energizing (Turning ON) or Deenergizing (Turning OFF) the Model CX7.

It is good standard practice never to energize or deenergize the Model CX7 when it is keyed in a transmit mode. First, always establish the receive mode. The Model CX7 is deenergized when the front panel control "AC" switch is in the extended (out or off) position. The Model CX7 may be energized by simply depressing the "AC" switch to the latched-in position or deenergized by depressing the switch until it bottoms and then permitting it to release to the extended position. The Nixie tube "KHZ" display will illuminate whenever the Model CX7 is energized. In addition to indicating the bandspread setting, their illumination serves as a visual confidence indication of an energized Model CX7 condition.

d. Operation of Front Panel Push-Switches. The front panel push-switches for "METER", "TRANSMIT VFO", and "CONTROL" functions operate in a similar manner as the "AC" switch previously explained. However, they are deenergized using a different method. Other than the "SPOT" pushbutton or "AC" push-switch,

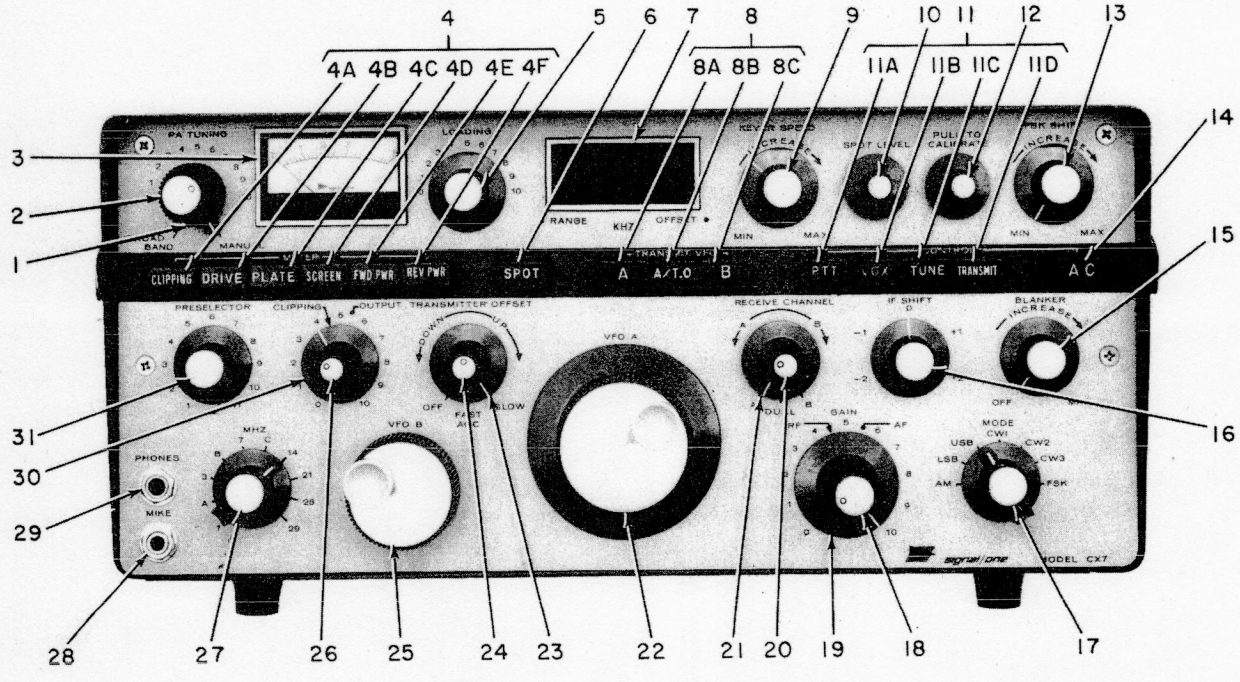

Figure 2-1. Model CX7 Front View

only one push-switch per group should be energized at a time. The energized position can also be referred to as the "DEPRESSED", "LATCHED-IN", "IN", "ON", or "SELECTED" position. Likewise, the deenergized position can also be referred to as the "OUT", "EXTENDED", or "RESET" position. To select the function listed on the applicable push-switch, depress the switch to the latched-in position.

CAUTION

Never simultaneously depress two or more of the grouped push-switches as each will latch-in resulting in many abnormal operating conditions.

To deenergize one of these grouped push-switches, simply depress one of the switches having an associated function. For example, if it is desired to deenergize the "TRANSMIT VFO-A" switch, depress either the "TRANSMIT VFO-B" or "A/T.O." push-switches. It should be noted that if a deenergized switch is not completely depressed, it may reset an energized switch, but may not seat itself to the latched-in position. This is recognizable by all the push-switches in an associated group being in the same extended position. This presents an abnormal operating condition resulting in various symptoms such as an improper meter indication or no power output. This may cause operator confusion so it is recommended that when meter or transmit VFO functions are not in use, the "PLATE" meter and the "A" transmit VFO switches be kept energized.

e. Operation of the Frequency Display and Normal Bandspread Tuning. The tuning position of the applicable "VFO-A" or "VFO-B" control within the bandspread is determined by observing the combined presentation for the four Nixie tubes. These tubes are always illuminated whenever the "AC" switch is energized. There is no mechanical linkage or gearing connecting the VFO control to the frequency display, consequently, what is being viewed is the output result of the electronic counter computer circuitry that analyzed the bandspread portion of the VFO output. It is perfectly normal for the right-hand tube to alternately display a numeral one digit higher or lower at a visibly blinking rate. For example, it may be alternately indicating between 9 and 0, 0 and 1, 1 and 2, 2 and 3, etc. When this occurs, it should be interpreted that it is 9-1/2, 1/2, 1-1/2, or 2-1/2, respectively. The display of the remaining tubes should be fixed, that is not

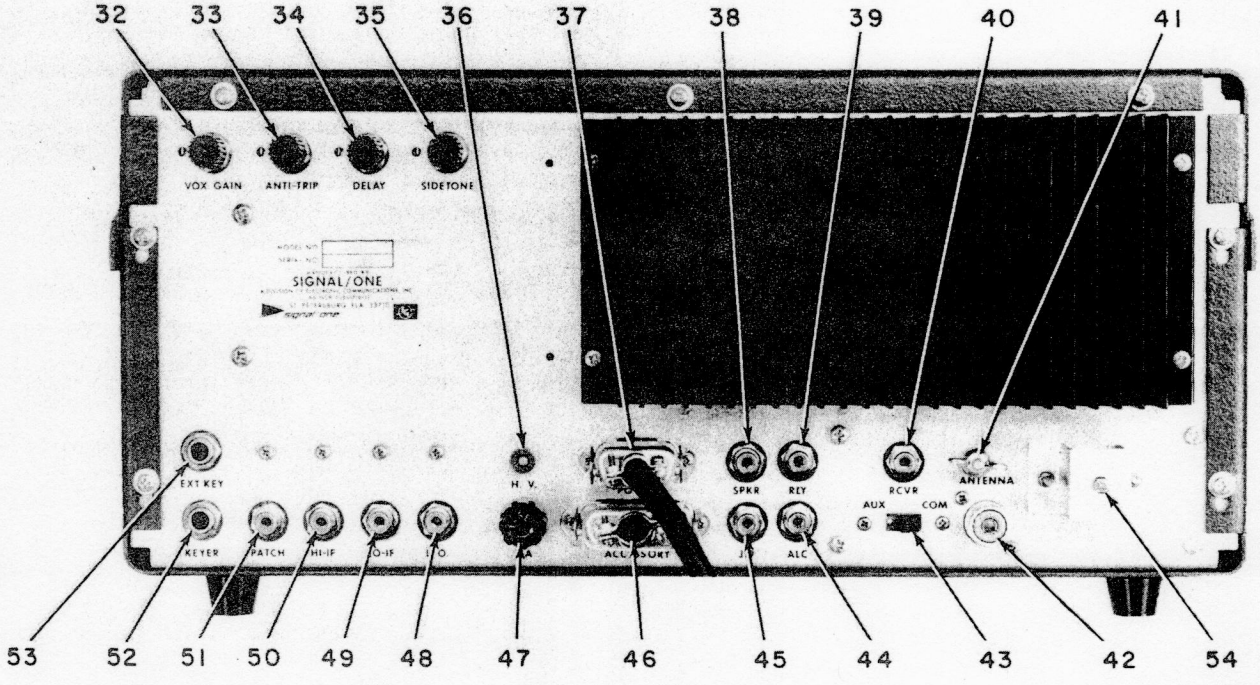

Figure 2-2. Model CX7 Rear View

changing if the VFO control is stationary. However, when the VFO is set to a frequency very near an even increment of ten, it is perfectly normal for two or more of the tubes to alternately display as previously described for the right-hand tube. Likewise, it may also appear that two of these digits are illuminated within the same tube. In this case, the display should change to a fixed indication when the applicable VFO control is rotated a few more degrees in either direction. There is approximately 50 complete 360° rotations of each VFO control from the full counterclockwise end to the full clockwise end. The end points of the "VFO A" and "VFO B" are noticeable by the start of a gradual increase in mechanical resistance of rotation and it should not be forced beyond this point for obvious reasons. Approximately between one half and two rotations from the full counterclockwise end is the beginning of the one megahertz bandspread and the frequency that should be displayed is "000.0". At this point, rotation to the left causes the over-range decimal point to illuminate and the display changes to ".999.9" or less depending on the final VFO control setting. If the "MHZ" band selector was set to "3", the display indication of ".999.9" would represent either a transmit or receive frequency of 2.999,900 MHz and a "000.0" indication would represent a frequency of 3.000,000 MHz. When the applicable VFO control is rotated to the right, the frequency increases approximately 25 kHz per revolution until the high end of the band is signified by a "999.9" frequency display. Further rotation to the right causes the over-range decimal point to again illuminate and the display changes to ".000.0" or greater, depending on the final VFO control setting. If the "MHZ" band selector was set to "3", the display indication of ".000.1" would represent a final frequency of 4.000,100 MHz. Each VFO is capable of being tuned approximately 25 kHz beyond the high (an indication of ".025.0") or low end (an indication of ".975.0") band edges. Therefore, caution must be used in VFO tuning in the transmit mode to prevent out of band transmission. It should always be remembered that the frequency being displayed is only the bandspread frequency and not the actual final receive, transmit, or entire VFO frequency. Therefore, the calibration procedure covered in paragraph 2.3.4 should periodically be performed. Changing the setting of the front panel "CALIBRATE", "TRANSMITTER OFFSET", or "IF SHIFT" control does not and was not intended to change the bandspread indication or bandspread spectrum. Whenever the transmit VFO "A/T.O." switch is latched-in, the "OFFSET" decimal point, on the right-hand side of the fourth Nixie tube from the left, illuminates. For example, if the display is indicating "345.6" (345.6 kHz) and then the "A/T.O." switch is depressed, the display changes to "345.6." (345.6 kHz). When reading the display, disregard the illumination of the "OFFSET" decimal point as its only purpose is to provide a visual reminder that the Model CX7 is in the transmit offset mode. If there is any doubt as to which VFO is being displayed, the question can be resolved by applying the following rules:

1. In the transmit mode, the display will indicate the VFO marked on the "TRANSMIT VFO" switch that is set to the latched-in position. (If the "A/T.O." switch is latched-in, VFO A is indicated.) If all three of these switches are in the out position, VFO A will be displayed.

2. In the receive mode, the display will indicate the VFO marked on the setting of the "RECEIVE CHANNEL" rotary selector switch (outer concentric control) except when in the "DUAL" position it will be VFO A.

f. Receive Mode Metering Indications. The front panel meter functions as an "S" meter regardless of the position of the "METER" switches, however, when the "SCREEN" switch is latched-in, the meter indicates slightly less than zero. Therefore, signal strength is usually measured with the "PLATE" switch latched-in. The meter has two scales. The red scale is used for "S" units 0 through 60. The black scale is used for transmitter mode indications. The "S" meter will move with the adjustment of the "RF GAIN" control, but will still indicate correctly with the rf gain set at less than maximum (if the received signal level is high enough to register on the "S" meter). For example, if the "RF GAIN" control is set for a no-signal meter indication of S-5, and the meter registers S-9 with a signal, then the receive signal is S-9. An S-9 indication is equivalent to a 50 microvolt signal at the main antenna connector.

g. Preexisting Switch and Control Positioning. As a convenience for the new CX7 owner, Signal/One positions all the switches and controls to specific settings prior to shipment. The positions were selected to help reduce initial operating errors and are listed in Table 2-2. The positioning sequence of each switch and control is repeated in detail in the following procedures for the benefit of those operating the Model CX7 for the first time.

Index No.	Item	Description
1	"BROADBAND/MANUAL" switch	The outer concentric two position rotary switch used in the transmit mode to select plate tank circuit capacitors. When the switch is set to "BROADBAND" no additional plate tank tuning is required after the desired band is selected. **WARNING** Do not change positions of the "BROADBAND/MANUAL" switch when the Model CX7 is keyed for a transmit condition, as this will result in damage to equipment, which is not covered by the warrantee.
2	"PA TUNING" control	The inner concentric continuous turn control used in the transmit mode to manually adjust the input capacitance in the plate tank. A "0" setting is maximum capacitance and "10" is minimum. Prior to effectively operating this control, the "BROADBAND/MANUAL" switch (Index No. 1) must be first positioned to "MANUAL."
3	Meter	The meter indication is dependent upon which "METER" switch is depressed. When in the transmit mode, the top scale "0" through "5" is used for a reference indication. The bottom scale "0" through "60" indicates received signal strength when in the receive mode regardless of "METER" switch position.
4	"METER" switches	The "METER" switches are used to select the desired parameter to be measured. The proper switch must be depressed (energized or the "IN" position). For the meter to indicate the desired transmit function, the six two-position meter switches are mechanically interconnected so that only one may be depressed at any one time. The switch is deenergized when in the extended (OUT) position. To place all "METER" switches in the deenergized position, simply depress any deenergized meter switch half way in and allow it to return to the extended position.
4a	"CLIPPING" switch	When depressed, permits the meter to indicate the relative transmit signal level in the 8.8 MHz IF stage as determined by the "CLIPPING" control (Index No. 30). A deflection of S-3 during voice peaks represents 10 db of clipping and

Table 2-1. Controls, Connectors, and Indicators (Sheet 1 of 9)

Index No.	Item	Description
4a (Cont)		full scale deflection during voice peaks is equivalent to 20 db of clipping.
4b	"DRIVE" switch	When depressed, permits the meter to indicate the relative automatic level control (ALC) signal bias for the RF Driver board. A midscale deflection is equivalent to approximately 6 db of ALC action.
4c	"PLATE" switch	When depressed, permits the meter to indicate the relative plate current drawn from the high voltage rectifier circuit on the Power Supply board. A full scale deflection is equivalent to 500 ma.
4d	"SCREEN" switch	When depressed, permits the meter to indicate the relative screen current drawn from the +300 Vdc rectifier circuit on the Power Supply board. A full scale deflection is equivalent to 50 ma.
4e	"FWD PWR" switch	When depressed, permits the meter to indicate the relative power output being applied to the rear panel antenna connector. A full scale deflection is equivalent to 200 watts. (See conversion Table 2-4).
4f	"REV PWR" switch	When depressed, permits the meter to indicate the relative power reflected from the rear panel antenna connector to the plate tank circuit. A full scale deflection is equivalent to 200 watts. (See conversion Table 2-4).
5	"LOADING"	A control used in the transmit mode to manually adjust capacitance within the plate tank. It is adjustable for any setting on or between "0" and "10." A "0" setting is maximum capacitance and "10" is minimum. Prior to effectively operating this control, the "BROADBAND/MANUAL" switch (Index No. 1) must be first positioned to "MANUAL."
6	"SPOT" pushbutton	A pushbutton switch that enables the operation of a mixer stage located on the IF board when manually held in the depressed position. The pushbutton automatically returns to the deenergized position when released. When depressed, a tone is present if the transmit and receive frequency are within 3 kHz of each other.
7	"KHZ" display	A four tube numeric readout, that is representative of bandspread tuning. Either channel A or B tuning may be displayed depending upon the setting of the "TRANSMIT VFO" switches

Table 2-1. Controls, Connectors, and Indicators (Sheet 2 of 9)

Index No.	Item	Description
7 (Cont)		(Index No. 8a, b, c), "SPOT" pushbutton (Index No. 6), and "RECEIVE CHANNEL" switch (Index No. 21). The decimal point on the third tube from the left is permanently displayed. The decimal point on the fourth tube from the left is displayed whenever the "TRANSMIT VFO-A/T.O." switch (Index No. 8b) is depressed. The decimal point on the first tube on the left is automatically displayed whenever the counter is operating in an overrange condition.
8	"TRANSMIT VFO" switches	The "TRANSMIT VFO" switches are used to select the desired VFO for a transmit condition. If the Model CX7 is not keyed for a transmit condition, VFO selection is determined by the "RECEIVE CHANNEL" switch (Index No. 21). The three switches are mechanically interconnected and only one should be depressed at any one time. In order to transmit, one of these switches must be energized at all times. Failure to do so will result in no rf drive to stimulate power output.
8a	"A" switch	When depressed, selects VFO A to be transmitted.
8b	"A/T.O." switch	When depressed, selects VFO A to be transmitted at a frequency which can be slightly offset from the normal VFO A frequency. The amount of offset is determined by the "TRANSMITTER OFFSET" control (Index No. 24).
8c	"B" switch	When depressed, selects VFO B to be transmitted.
9	"KEYER SPEED" control	A potentiometer that varies the frequency of oscillator in the electronic keyer thereby changing the transmitted speed of the dot or dash cw output. The rate of speed is approximately 5 WPM when positioned to "MIN" and 60 WPM when positioned to "MAX".
10	"SPOT LEVEL" control	A potentiometer that varies the attenuation of the audio output produced when the "SPOT" pushbutton (Index No. 6) was depressed.
11	"CONTROL" switches	These four two-position "CONTROL" switches are used to select specific type of modes. Only one switch should be depressed (energized or the "IN" position) at any one time. Each switch is deenergized when in the extended (OUT) position.

Table 2-1. Controls, Connectors, and Indicators (Sheet 3 of 9)

Index No.	Item	Description
11a	"PTT" switch	When depressed, this switch only serves the mechanical function of resetting the associated switches (Index No. 11b, 11c, and 11d) to the deenergized position thereby placing the Model CX7 in the receive mode.
11b	"VOX" switch	When depressed, the VOX mode is established and the presence of voice signals will automatically enable the operation of the transmitter circuits. The absence of voice signals will cause automatic switching to the receive mode. The function of this switch is dependent upon the setting of the "VOX GAIN" control (Index No. 32) and the "ANTI-TRIP" control (Index No. 33).
11c	"TUNE" switch	When depressed, it enables the operation of the transmitter circuits and causes an internal CW signal to drive the PA stage resulting in power output. This permits manual power amplifier tuning or internal adjustments to be performed under test conditions.
11d	"TRANSMIT" switch	When depressed, it enables the operation of the transmitter circuits. Power output will not be developed until a CW or modulating signal is supplied from an external source.
12	"PULL TO CALIBRATE" control	A switch/potentiometer assembly that applies the output of the 100 kHz standard to the receiver front end when in the pulled out position. When this control is rotated it changes the frequency of the 43.1 MHz oscillator on the BFO board.
13	"FSK SHIFT" control	A potentiometer that changes one of the local oscillator frequencies used in generating VFO B when the appropriate rear panel interconnections have been wired.
14	"AC" switch	A two position switch that applies ac power to the Model CX7 when depressed to the "IN" position. Power may be removed by further depressing the switch until it releases and positions to the extended (OUT) setting. This switch also supplies an open or a ground to the rear panel power connector (Index No. 37) for external logic switching purposes.
15	"BLANKER" control	A potentiometer that changes the threshold of the noise blanker amplifier. The noise blanker circuit does not function when in a transmit

Table 2-1. Controls, Connectors, and Indicators (Sheet 4 of 9)

Index No.	Item	Description
15 (Cont)		mode or when the control is set to "OFF". Increasing the control to the appropriate setting cancels rf noise pulses in the receive signal path.
16	"IF SHIFT" control	A potentiometer that is used in the receive mode to change the frequency of the 8.8 MHz oscillator on the BFO board. Its function permits an interfering signal to be shifted out of passband of the IF filters. At the "0" position, the IF frequency is centered in the IF filter passband. The numerical settings of "-2", "-1", "+1", and "+2", represent the frequency in kHz from the center of the IF filter passband. This control does not affect the local oscillator frequency in the transmit mode.
17	"MODE" selector	A seven position rotary switch that determines the operating mode for reception and transmission. The "AM" (amplitude modulation), "LSB" (lower sideband), "USB" (upper sideband), and "CW1" (continuous wave number one) positions select standard functions. The "CW2" (continuous wave number two), "CW3" (continuous wave number three), and "FSK" (frequency shift keying) positions select special functions and will result in no output unless optional filters are installed. The receive signal characteristics which result from the "AM", "USB", and "CW1" positions are effectively the same quality. Likewise, the "LSB" signal is similar except that it is the lower sideband. The signal characteristics for the remaining positions are dependent upon the passband of the optional filters.
18	"GAIN-AF" control	The inner concentric control is a potentiometer that varies the attenuation of the product detector audio output. It is an independent portion of a dual-potentiometer assembly. The other independent portion is the "GAIN-RF" control (Index No. 19).
19	"GAIN-RF" control	The outer concentric control is a potentiometer that varies the operating bias of the Front End and IF board RF stages.
20	"RECEIVE CHANNEL" balance control	The inner concentric control is a potentiometer that varies the operating bias of the "A" and "B" mixers on the IF board, when in the receive mode. It is a portion of a potentiometer/switch assembly. The effect of its operation is dependent upon the setting of the switch portion

Table 2-1. Controls, Connectors, and Indicators (Sheet 5 of 9)

Index No.	Item	Description
20 (Cont)		(Index No. 21) which must be set to "DUAL". When set to the midrange position, the output of both mixers will be the same level. When positioned toward either the "A" or "B" settings, the applicable mixer output will be higher or lower in level.
21	"RECEIVE CHANNEL" balance control	The outer concentric control is a three position rotary switch. The "A" position permits only the VFO A operation, the "B" position permits only the VFO B operation and the "DUAL" position permits the operation of both. The switch functions are only applicable in the receive mode and do not interfere with or determine the selection of the transmit VFO.
22	"VFO A" control	A control that permits tuning an inductor located in VFO A. Its movement covers the 1 MHz bandspread range with approximately 25 kHz change per revolution. The exact position in the band, to within 100 Hz, is indicated on the Nixie tube display (Index No. 7) depending on the specific setting of the "TRANSMIT VFO" switches (Index No. 8) or the "RECEIVE CHANNEL" switch (Index No. 21).
23	"AGC" switch	A three position rotary switch that determines the operation of the automatic gain control (AGC) circuit used in the receive mode. The "OFF" position opens the AGC output signal path and the remaining two positions complete the signal path. The "FAST" position selects a fast time constant AGC voltage decay and the "SLOW" position selects a slow "HANG" time constant AGC voltage decay.
24	"TRANSMITTER OFFSET" control	The inner concentric control is a potentiometer that permits the offset oscillator frequency to be varied. It must be used in conjunction with the "TRANSMIT VFO-A/T.O." switch (Index No. 8b). The midrange position is the center frequency. Rotation from midrange to the left permits the VFO A frequency to be decreased proportionally to a maximum of -3 kHz. Rotation from midrange to the right permits the VFO A frequency to be increased proportionally to a maximum of +3 kHz.
25	"VFO B" control	A control that permits tuning an inductor located in VFO B. It performs a similar function as previously explained for the "VFO A" control (Index No. 22).

Table 2-1. Controls, Connectors, and Indicators (Sheet 6 of 9)

Index No.	Item	Description
26	"OUTPUT" control	The inner concentric control is an independent portion of a dual potentiometer assembly. It is used in the transmit mode to vary the attenuation of the excitation input to the RF Driver board thereby controlling the amount of RF power output. The "0" setting is representative of minimum drive and "10" is maximum.
27	"MHZ" band selector	A ten position rotary selector switch used to select the desired frequency band. The "A", "B", or "C" positions will result in no output unless optional crystals have been installed for nonamateur band use. The remaining positions represent the specific low end frequency of the selected band. **WARNING** Do not change positions of the "MHZ" band selector when the Model CX7 is keyed for a transmit condition, as this will result in damage to the equipment, which is not covered by the warrantee.
28	"MIKE" connector	A jack connector that permits a high impedance microphone audio output and push-to-talk lines to be applied to the Model CX7.
29	"PHONES" connector	A jack connector that permits low impedance headphone connections to the Model CX7. When the headphone plug is inserted, the speaker is disconnected from the circuit.
30	"CLIPPING" control	The outer concentric control is an independent portion of a dual potentiometer assembly that varies the operating bias of an IF amplifier stage in the transmit signal path. The "0" setting is representative of minimum clipping and "10" is maximum. This control is used in conjunction with the "CLIPPING" meter switch (Index No. 4 a).
31	"PRESELECTOR" control	A control used in the receive mode to adjust capacitance in the rf input tuned circuit. Its only function is to trim the front end after changing bands. The "1" setting represents minimum capacitance and "12" represents maximum.

Table 2-1. Controls, Connectors, and Indicators (Sheet 7 of 9)

Index No.	Item	Description
32	"VOX-GAIN" control	A potentiometer that varies the attenuation of the audio input being applied to the VOX amplifier circuit. Its function is to adjust the threshold level of speech that keys the Model CX7 for a transmit condition.
33	"ANTI-TRIP" control	A potentiometer that varies the attenuation of the speaker audio signal being applied to the anti-vox amplifier circuit input. Its function is to adjust the threshold level of demodulated audio that keeps the Model CX7 keyed for a receive condition.
34	"DELAY" control	A potentiometer that varies the resistance in a time constant circuit on the audio board. When using VOX keying in the transmit mode, its function is to adjust the length of time that the transmitter stays keyed after the operator stops speaking.
35	"SIDETONE" control	A potentiometer that varies the attenuation of the sidetone oscillator audio output when using CW emission in the transmit mode.
36	"HV" connector	A connector, with protective insert, providing a +1500 Vdc output for test and accessory use.
37	"POWER" connector	A connector providing multiple outputs and inputs for test and accessory use in addition to providing primary input power connections.
38	"SPKR" connector	A connector providing an audio output for external speaker use.
39	"RLY" connector	A connector providing a ground whenever the Model CX7 reed relay closes or the "TRANSMIT" switch (Index No. 11d) is energized. The output is for test and accessory use.
40	"RCVR" connector	A connector for applying an antenna to only the receiver input.
41	Ground connector	A threaded bolt with wing nut provided for earth ground connections.
42	"ANTENNA" connector	A connector for applying the main antenna to both transmitter output and receiver input.
43	"AUX-COM" switch	A two position slide switch for selecting the receiver antenna. The "COM" position connects the main "ANTENNA" connector (Index No. 42) to the receiver input. The "AUX" position connects the alternate "RCVR" connector (Index No. 40) to the receiver input.

Table 2-1. Controls, Connectors, and Indicators (Sheet 8 of 9)

Index No.	Item	Description
44	"ALC" connector	A connector providing an ALC output for test and accessory use.
45	"J19" connector	A spare connector.
46	"ACCESSORY" connector	A connector providing multiple outputs and inputs for test and accessory use.
47	"5A" fuse holder	A fuse holder for the 5A slow blow fuse in the primary power line.
48	"L.O." connector	A connector providing an output from the Front End board local oscillator for test and accessory use.
49	"LO-IF" connector	A connector providing an 8.8 MHz (25 kHz bandpass) output from the IF board for test and accessory use. The output level is dependent upon the setting of the "BLANKER" control (Index No.15).
50	"HI-IF" connector	A connector providing a 39 to 40 MHz bandpass output from the Front End board for test and accessory use.
51	"PATCH" connector	A connector for applying a phone patch transmit input to the Model CX7.
52	"KEYER" connector	A connector for applying the output of an external paddle key to the Model CX7.
53	"EXT KEY" connector	A connector for applying the output of an external telegraph key to Model CX7.
54	Bandswitch Shaft Extention	Bandswitch shaft extention permits the installation of an external one pole, 2 to 12 position ceramic wafer (Oak part no. 399150-JC), thereby, selecting different antennas or linear amplifiers by positioning the "MHz" band selector (Index No.27).

Table 2-1. Controls, Connectors, and Indicators (Sheet 9 of 9)

Control	Position
Broadband/Manual	*Manual
PA Tuning	6
Matching	6.5
Meter	Plate
PRESELECTOR	2
Clipping	3
Output	0
Transmitter Offset	*Center
AGC	Slow
Bandswitch	*3
Transmit VFO	A
Keyer Speed	Minimum
Spot Level	1/4 Range
Calibrator	*OFF (in)
FSK Shift	Minimum
Control	PTT
Receive Channel (outer control)	A
Receive Channel (inner control)	CCW
IF Shift	0
Blanker	OFF
RF Gain	10
AF Gain	3
Mode	USB
Rear Panel	
VOX Gain	1/2 Range
Anti-Trip	1/4 Range
Delay	CCW
Sidetone	1/4 Range

*See applicable WARNING or CAUTION note on following page.

Table 2-2. Switch and Control Positioning

WARNING

1. Never change positions of the "BROADBAND MANUAL" switch when the Model CX7 is keyed for a transmit condition, as this will result in damage to the equipment which is not covered by the waran-tee.

2. Never change positions of the "MHZ" band selector switch when the Model CX7 is keyed for a transmit condition, as this will result in damage to the equipment, which is not covered by the warrantee.

3. High voltage is always present on the rear panel auxillary and test connectors. Use extreme caution at all times.

4. Do not ground the Phillips-head screws located immediately above the rear panel "PATCH, HI-IF, LO-IF, or L.O." connectors as this will result in damage (not covered by warantee) to the equipment because they are at a low voltage potential above DC ground.

CAUTION

1. Do not indescriminately rotate the front panel "CALIBRATE" control or otherwise change its setting in either the receive mode or transmit mode, when positioned in or when pulled out as this will result in the improper VFO frequency unless it is adjusted in accordance with paragraph 2.3.4.

2. Use caution when adjusting the "TRANSMITTER OFFSET" control near each band edge as this may result in transmission outside of the amateur bands.

2.3.2 Single Channel Receive Mode Operation. Do not energize the "AC" switch until specified in the following procedure, subparagraph g.

a. Check that the Model CX7 is not being externally keyed for a transmit condition.

b. Depress the front panel "PTT" switch.

c. Check the position of the rear panel "AUX-COM" slide switch: If the antenna is connected to the connector immediately below the wing nut, set the switch to the "COM" position. This permits reception on the same antenna used for transmitting. If a different antenna is used for reception, and if it connected to the connector immediately above the slide switch, set the switch to the "AUX" position.

d. Check that either the speaker or headphones are connected to the applicable connector. (If the headphones are utilized, the operation of the speaker will be inhibited.)

e. Check that the rear panel "ACCESSORY" and "POWER" connectors and that the antenna and ground are securely fastened.

NOTE

The supplied accessory and power plugs must be utilized because they complete specific jumper connections required for the normal operation of the Model CX7.

f. Check that the power cord is connected to an ac outlet.

g. Depress the "AC" switch to the latched-in position and allow a few minutes for crystal frequency stabilization. Check that the Nixie tubes are illuminated and presenting a normal display.

h. Set the "MODE" rotary selector switch to the "USB" position.

i. Set the "MHZ" band selector to the "3" position.

j. Set the "RECEIVE CHANNEL" switch (outer concentric control) to the "A" position.

k. Set the AGC switch (outer concentric control) to the "SLOW" position.

l. Depress the "PLATE" meter switch to the latched-in position. Any meter indication will now represent relative received signal strength as an "S" meter.

m. Position the "RF GAIN" control (outer concentric control) for maximum gain to the "10" setting.

n. Position the "IF SHIFT" control to the "0" setting.

o. Position the "NOISE BLANKER" control to the "OFF" setting.

p. Position the "AF GAIN" control (inner concentric control) to a setting that provides a comfortable audio level for random noise.

q. Position the "PRESELECTOR" for either a peak audio noise or "S" meter indication.

r. Tune the "VFO-A" control until a desired station is monitored and adjust the remaining reception conditioning controls using the procedures covered in paragraphs 2.3.2.1 through 2.3.2.3, as required. When tuning to a new station, always remember to first set the "IF SHIFT" control to the "0" position and the "BLANKER" control to the "OFF" position.

s. If it is desired to use the other VFO instead, set the "RECEIVE CHANNEL" switch (outer concentric control) to the "B" position and tune in the desired station using the "VFO-B" control.

2.3.2.1 Operation of the "AGC" Switch. For CW reception, the "AGC" switch should be set to the "FAST" position. Some operators may prefer to utilize this switch in the "OFF" position and manually simulate AGC by adjusting the "RF GAIN" control. (However, the "OFF" position is normally not used except for performing alignment or conducting special tests.)

For SSB or AM reception, the "AGC" switch should be set to the "SLOW" position so that the AGC voltage will not sag between syllables.

2.3.2.2 Operation of the "IF SHIFT" Control. The "IF SHIFT" control is operated in the same manner for all modes of reception. This control should always be set to the "0" position while tuning in a station with the VFO control. If another station is interfering with the station you wish to receive, adjust the "IF SHIFT" control until the unwanted station is eliminated. This is very easy to accomplish in the cw mode with no apparent change in signal characteristics, however, in voice mode, the signal quality might be sacrificed as the control setting may also reduce either the high or low frequency response of the desired station.

2.3.2.3 Operation of the "BLANKER" Control. The "BLANKER" control is operated in the same manner for all modes of reception. When the "BLANKER" control is positioned to the full counterclockwise end, no noise blanking is performed. If objectionable noise pulses are being received along with the station you are monitoring, slowly advance the "BLANKER" control in the clockwise direction until the noise pulses have been reduced sufficiently. If this control is advanced too far, clipping and distortion will also occur in the station you are monitoring. Therefore, the minimum setting consistent with adequate limiting obtains the best effective results.

2.3.3 Dual Channel Receive Mode Operation. The same operating instructions that were specified for the single channel receive mode operation are also applicable for dual channel receive mode operation with minor exceptions. During this mode, the signal conditioning controls, such as "AGC", "IF SHIFT", "BLANKER", "RF GAIN", and "AF GAIN" cannot be used to command one channel without affecting the other channel. Therefore, the normal benefits derived from positioning these controls may have to be compromised during the dual receive mode operation. The following steps, a through d, comprise the basic procedure for establishing the dual channel receive mode:

a. Set the "RECEIVE CHANNEL" rotary selector switch (outer concentric control) to the "A" position and tune in the desired station using the "VFO-A" control.

b. Set the "RECEIVE CHANNEL" rotary selector switch (outer concentric control) to the "B" position and tune in a different station, that is within the same band, using the "VFO-B" control.

c. Set the "RECEIVE CHANNEL" rotary selector switch (outer concentric control) to the "DUAL" position. It is unlikely that both stations have the same signal strength, consequently the audio volume of the channel A and B will be unequal.

d. Adjust the "RECEIVE CHANNEL" potentiometer (inner concentric control) to a position that balances the audio outputs so they are equal. This control cannot increase the basic audio level, it can only reduce the existing level of the loudest station. Gradually rotating this control to the counterclockwise end proportionally decreases the output of channel B until it is completely eliminated. Likewise, gradually rotating this control to the clockwise end proportionally

decreases the output of channel A until it is completely eliminated. The "AF-GAIN" control (inner concentric control) will change the basic volume of both stations.

e. Tuning to a new station on either channel can be accomplished by using the same procedure as previously described in steps a through d.

Special cases may exist when one of the channels must be constantly monitored. If this is known prior to establishing the basic dual receive condition, use channel B for the constantly monitored channel because only the channel A VFO frequency is displayed. However, if it is desired to observe the VFO B display or tune to a new station with the aid of the display, perform the following procedures:

1. Position the "TRANSMIT VFO-B" switch to the latched-in position (frequency display still indicates VFO A).

2. Adjust the "SPOT LEVEL" control to the full counterclockwise position.

3. Depress the "SPOT" pushbutton to the "IN" position and hold (frequency display now indicates VFO B).

4. Upon completion of using the VFO B display, release the "SPOT" pushbutton (frequency display returns to VFO A).

2.3.4 Calibration Using the "PULL TO CALIBRATE" Control. Calibration using this control permits compensating for an incorrect intermediate frequency that is used in both the receive and transmit mode of operation. Care must be exhibited when utilizing this control because it is actively in the circuit for both the "IN" and "OUT" positions and could conceivably cause the calibration to be misadjusted by accident. The recommended calibration procedure is as follows:

a. Position the front panel switches and controls for the single channel receive mode of operation using either receive channel A or B.

b. Set the "MODE" rotary selector switch to the "USB" position.

c. Position the "IF SHIFT" control to the "-1.5" position.

d. Set the "MHZ" band selector switch to the desired band.

e. Tune the applicable "VFO A" or "VFO B" control for a front panel frequency display of "000.0" or any multiple 100 KHZ point.

f. Pull out the "PULL TO CALIBRATE" control and check for the presence of an audio zero beat caused by a harmonic of the 100 kHz internal frequency standard output.

NOTE

If the zero beat is not present, tune the applicable VFO control to determine if it occurs within ±100 Hz of the "000.0" indication which signifies that calibration is within limits.

2.3.4.1 Compensation. Prior to performing any adjustments, check the calibration on the remaining bands to determine if similar symptoms exist and then perform one of the following compensations as required:

a. If the calibration is off on all bands by the same amount and direction, perform the calibration adjustment by first tuning either the applicable "VFO A" or "VFO B" control for a front panel frequency display of "000.0" and rotate the "PULL TO CALIBRATE" control to the position where the zero beat occurs. All bands have now been simultaneously calibrated.

b. In some cases, calibration may not be the same on all bands due to unequal aging of internal oscillator components. If desired, the "PULL TO CALIBRATE" control can be adjusted for frequency compensation for only a specific band in a similar manner as covered in previous subparagraph a. When a different band is selected, then it too will require calibration.

2.3.4.2 Calibration Using "WWV"

a. Set the "MODE" rotary selector switch to the "USB" position.

b. Position the "IF SHIFT" control to the "-1.5" position.

c. Set the "MHZ" band selector to the "14" position.

d. Tune in "WWV" on the high end of the band using the applicable "VFO A" and "VFO B" control.

e. Rotate the "PULL TO CALIBRATE" control to the position that produces a front panel frequency display of ".000.0" (15 MHz).

2.3.4.3 Calibrating Internal 100 kHz Standard.

a. Repeat the steps covered in paragraph 2.3.4.2(a) through (d).

b. Pull out the "PULL TO CALIBRATE" control.

c. Insert a small screwdriver through the special cut-out on the top right-hand side of the Model CX7 cover (refer to Figure 2-3 for exact location) and adjust capacitor C30 for a zero beat. This is best accomplished when WWV is transmitting a steady carrier. The zero beat is caused by 150th harmonic of the internal standard and the carrier of WWV.

2.4 Transmit Mode Operating Procedures

2.4.1 General. The general instructions covered in paragraph 2.4.1a through d are stated for information purposes and should not be performed at this time. Much of the general information specified in the receive mode general information paragraph 2.3.1a through g is also applicable and should be reviewed before actually operating the Model CX7 in the transmit mode. It is suggested that the operating procedure covered in paragraph 2.4.2 be performed initially with the Model CX7 connected to a dummy load, having a 50-ohm impedance, until the operator achieves the proper feel for the PA tuning and loading adjustment reactions.

a. Control of Power Output. The master control for power output is the "OUTPUT" potentiometer which varies RF drive to the final amplifier. When the transmitter is keyed, the "0" setting should present very little or essentially no power output. More than adequate drive is usually available, therefore, the majority of the controlling range normally utilized is between the "0" and "3" setting. It is safe to operate this control at settings higher than "3" as long as the screen current does not exceed an indication of "1.2" (12 MA) and the plate current does not exceed an indication of "3.3" (330 MA). The control should always be returned to the "0" setting before selecting a new frequency or prior to terminating final transmitter operation. During normal operation the Model CX7 should not be adjusted for a power output greater than 150 watts as the heat dissipation characteristics of the power amplifier will be exceeded.

b. Transmit Mode Metering Indications. The front panel meter is used for monitoring various transmit mode functions and provides a reference indication pertaining to the applicable meter switch that is set to the latched-in position. The different monitoring functions can be selected with or without power output present because all indications are relative, that is, the meter is not

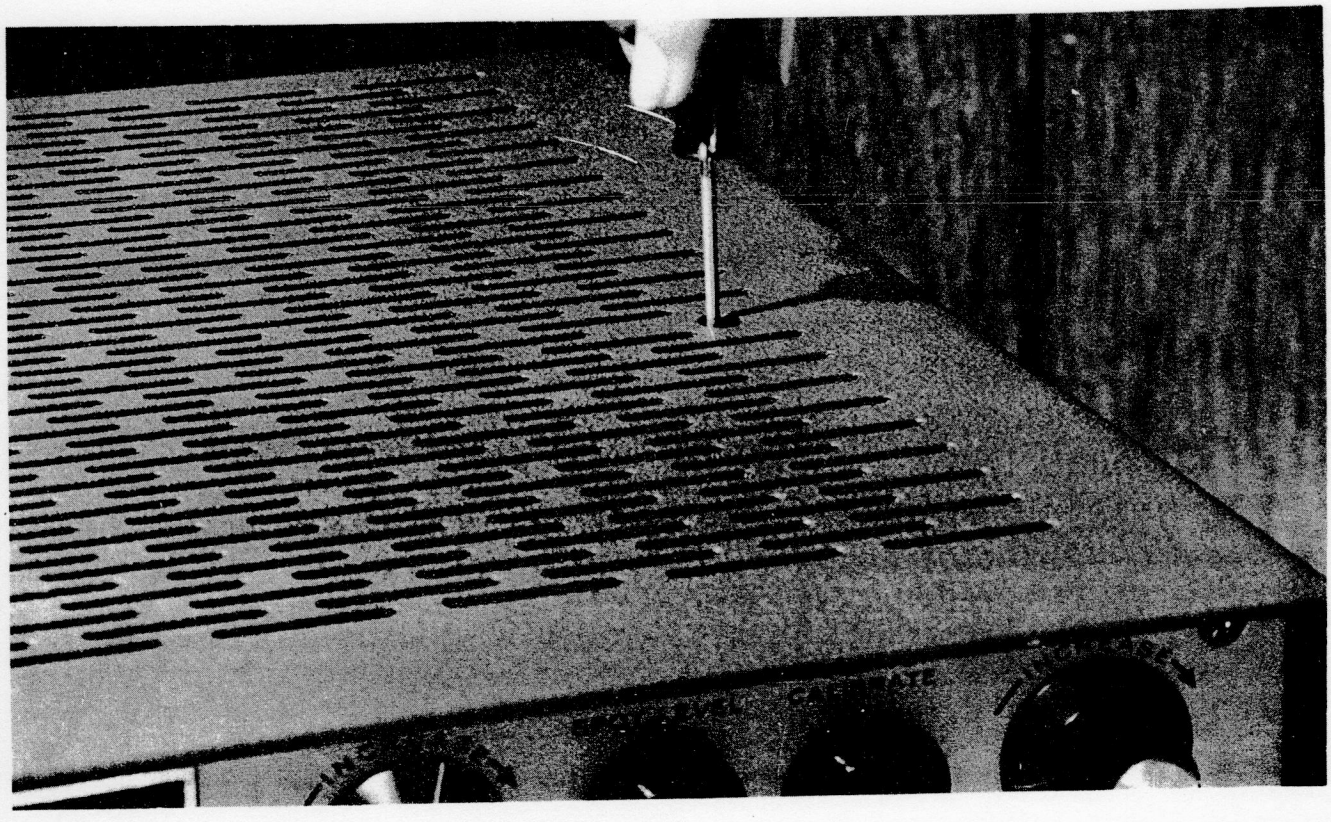

Figure 2-3. Capacitor C30 Location

directly in the circuit path of the function being monitored and will not interrupt transmitter operations. All the levels of parameters being measured, except clipping, are indicated on the black scale which is divided in units 0 through 5 with 4 subdivisions between each major division. The amount of clipping is indicated on the red scale. If all the meter switches are in the extended-out position, no transmit functions are monitored. Nominal and maximum meter indications for CW are listed in Table 2-3 for quick reference. The relationship between the meter indication and the actual value can be determined from the following:

1. Clipping. A nonlinear indication on the red scale that requires translating to determine an approximate amount of voice peak clipping. An S-3 to S-4 indication represents 10 DB of clipping and full scale represents 20 DB.

2. Drive. A nonlinear indication on the black scale that is used for reference only. Actual values are not significant as this indication represents the approximate amount of the composit automatic level control (ALC) derived from either or both control and screen grid currents. An indication signifies that an ALC voltage is automatically reducing the RF drive so that the control and screen grid currents are not permitted to exceed their safe ratings.

3. Plate. A linear indication on the black scale that signifies the actual value of plate current. Each major division mark represents 100 milliamperes. Therefore, a full scale indication would be 500 milliamperes.

4. Screen. A linear indication on the black scale that signifies the actual value of screen current. Each major division represents 10 milliamperes. Therefore, a full scale indication would be 50 milliamperes. It is permissible for this indication to deflect in the negative direction during transmission or power amplifier tuning.

5. FWD PWR. A nonlinear indication on the black scale that requires translating to determine the actual amount of forward power output. To calculate the power output from the meter indication, refer to Table 2-4.

Function	Indications		
	Idling At Zero Watts	At 150 Watts	Maximum Safe Values
PLATE	1 (100 MA)	2 to 3 (200 to 300 MA)	3.3 (330 MA)
SCREEN	0	Less than 1.2 (12 MA)	1.2 (12 MA)
FWD PWR	0	4.2 (150 Watts)	4.2+ (150 Watts +) During voice or CW operation or 150 Watts maximum during continuous duty
REV PWR	0	See NOTE 2	See NOTE 2
DRIVE	0	Less than 5	Less than 5
CLIPPING	See NOTE 1	See NOTE 1	See NOTE 1

*NOTES:
1. Not applicable, see paragraph 2.4.4.3.
2. In BROADBAND MODE: Not more than the value which results in an SWR of 1.5:1. In MANUAL MODE: Not more than the value which results in an SWR of 3:1.

Table 2-3. Nominal Meter Indications

6. REV PWR. A nonlinear indication on the black scale that requires translating to determine the actual amount of reverse (reflected) power. Meter divisions for both forward or reverse indications represent the same value in watts. Reverse power can be calculated using Table 2-4.

c. Operation of the "BROADBAND/MANUAL" Switch. Two power amplifier tuning modes are provided in the choice of "BROADBAND/MANUAL" switch positions. The determining factor in choosing tuning modes is governed by characteristics resulting from the quality of antenna system being used. At any frequency where the standing wave ratio is less than 1.5:1, the broadband mode can be used. The advantage of using the broadband mode is that the "PA TUNING" and "LOADING" controls do not have to be adjusted thus reducing the tuning time.

WARNING

Do not change positions of the "BROADBAND/MANUAL" switch when the Model CX7 is keyed for a transmit condition. Do not operate in the broadband mode whenever the VSWR exceeds 1.5:1. Always tune the power amplifier stage in the manual mode. Failure to observe any of the above instructions will result in damage to the equipment which is not covered by the waran-tee.

d. VFO Channel Selection and VFO Tuning. Three separate VFO channels are provided for the transmit mode: "VFO A", "VFO A/T.O.", and "VFO B". The Model CX7 can transmit on any one of these at any specific time. (Dual channel operation is only for the receive mode.) The VFO channels may be selected with or without power output present. To operate with "VFO A", depress the "TRANSMIT-VFO A" switch to the latched-in position and use the "VFO A" control for bandspread tuning. To operate with "VFO B", depress the "TRANSMIT-VFO B" switch to the latched-in position and use the "VFO B" control for bandspread tuning. To operate with "VFO A/T.O.", depress the "TRANSMIT-VFO A/T.O." switch to the latched-in position and use the "VFO A" control for bandspread tuning. The actual "VFO A/T.O." channel frequency may be offset from the "VFO A" frequency being displayed by the Nixie tubes by a constant specific amount determined by the setting of the "TRANSMITTER OFFSET" control (up to 3 kHz). (The frequency offset tracks with the rotation of the "VFO A" tuning control.) The decimal point in the right-hand Nixie tube illuminates to provide a visual warning that the frequency readout is not indicating the actual transmitted frequency whenever the "VFO A/T.O." channel is being used.

Meter Indication	Equivalent Watts
0.0	0
0.2	1
0.4	2
0.6	4
0.8	7
1.0	10
1.2	14
1.4	19
1.6	25
1.8	33
2.0	40
2.2	48
2.4	57
2.6	66
2.8	75
3.0	85
3.2	100
3.4	108
3.6	118
3.8	130
4.0	140
4.2	150
4.4	166
4.6	180
4.8	190
5.0	200

Table 2-4. Determining Actual Power

WARNING

It is possible to transmit outside the authorized band by using the "VFO A T.O." channel at the band edge and subsequently offsetting in the wrong direction. Therefore, tuning precautions should be observed.

e. Antenna System Checkout. Damage to the Model CX7 caused by a faulty antenna system can be prevented by adjusting for a low forward power meter indication of 1 (10 watts) and measuring the reverse power. If the reverse power meter indication is higher than 0.4 (2 watts), check for an open in the antenna system connections.

2.4.2 Tune Mode Operation. (Do not energize the "AC" switch until specified to do so in the following procedure, subparagraph f.) Note that in this initial procedure, the transmitter is not keyed until reaching subparagraph m.

a. Check that the Model CX7 is not being externally keyed for a transmit condition.

b. Depress the front panel "PTT" switch, thereby ensuring that a receive mode will be established.

c. Check that either the speaker or headphones and either the mike or the key are connected to the applicable connector. (If the headphones are utilized, the operation of the speaker will be inhibited.)

d. Check that the rear panel "ACCESSORY" and "POWER" connectors and that the main antenna and ground connections are securely fastened.

NOTE

The supplied accessory and power plugs must be utilized because they complete specific jumper connections required for the normal operation of the Model CX7.

e. Check that the power cord is connected to an ac outlet.

f. Depress the "AC" switch to the latched-in position and allow a few minutes for crystal frequency stabilization. Check that the Nixie tubes are illuminated and presenting a normal display.

g. Set the "MODE" rotary selector switch to either the "AM", "LSB", "USB", or "CW1" position.

NOTE

The tune mode is not dependent upon any particular "MODE" switch setting.

WARNING

Do not change positions of the "MHZ" band selector when the Model CX7 is keyed for a transmit condition, as this will result in damage to the equipment which is not covered by the warantee.

h. Set the "MHZ" band selector to the "3" position.

i. Set both the "OUTPUT" control (inner concentric control) and "CLIPPING" control (outer concentric control) to the "0" position.

j. Set the "BROADBAND/MANUAL" switch to the "MANUAL" position.

k. Depress the "TRANSMIT VFO A" switch to the latched-in position.

l. Depress the "PLATE" meter switch to the latched-in position.

m. Set the "LOADING" control to the mid-range position between the "6" and "7" settings.

n. Set the "PA TUNING" control (inner concentric control) to the "6" position.

o. Depress the "TUNE" switch to the latched-in position. The transmitter is now keyed and minimum power output is present. The front panel meter should indicate "1" (100 MA) for an idling plate current (80 to 100 MA is normal).

p. With the "OUTPUT" control in the "0" position, tune the "VFO A" control to a frequency in the middle of the band (or the frequency you wish to transmit on).

q. Depress the "SCREEN" switch to the latched-in position. The front panel meter should indicate "0" (no screen current should be present at this time).

r. Tune the power amplifier stage in accordance with the following steps 1 through 9:

NOTE

The overall objective of this procedure is to obtain an RF power output of 150 watts or more, a minimum plate current in the 200 to 300 MA range, and a minimum screen current of less than 12 MA.

1. Rotate the "OUTPUT" control from 0 to 1 and back to 0 while observing the screen meter indication. If the screen current increased in level, adjust the "OUTPUT" control until the meter indicates "1.0" (10 MA) without advancing the "OUTPUT" control beyond "3". If the screen did not change or if it decreased below "0", depress the "PLATE" switch to the latched-in position and adjust the "OUTPUT" control until the meter indicates "2.6" (260 MA).

2. Depress the "FWD PWR" switch to the latched-in position and note the forward power indication on the meter for future reference. Little or no power may be present.

3. Depress the "PLATE" switch to the latched-in position and adjust the "PA TUNING" (inner concentric control) for the lowest point in the dip of the plate meter indication while not permitting it to exceed "3.3" (330 MA). The dip should occur between "2" and "2.6" (200 and 260 MA).

4. Depress the "FWD PWR" switch to the latched-in position and note the forward power indication on the meter for future reference. An increase in power above that noted in the previous measurement should be observed.

5. Depress the "SCREEN" switch to the latched-in position and adjust the "PA TUNING" and "LOADING" controls for maximum power output and a peak screen meter indication while not permitting it to exceed "1.2" (12 MA).

NOTE

When plate current is dipped, screen current will peak. Therefore, during the remaining steps, the "PA TUNING" and "LOADING" controls can be adjusted for a peak screen current as long as the screen current is not permitted to exceed 12 MA.

6. Depress the "FWD PWR" switch to the latched-in position and note the forward power indication on the meter for future reference. The power output should be higher in level than that noted in step 4. If not, repeat steps 3 through 6 until an increase to at least "3.8" (130 watts) is noted.

7. Depress the "PLATE" switch to the latched-in position and slightly advance the "OUTPUT" control for a plate meter indication of "3".

8. Depress the "SCREEN" switch to the latched-in position and check that the screen meter indication is still less than "1.2".

9. Depress the "FWD PWR" switch to the latched-in position and note the forward power indication on the meter. The indication should be at least "4.2" which represents a power out of 150 watts. If it is higher, reduce the setting of the "OUTPUT" control to the point where "4.2" is indicated. If the initial indication was less than "4.2", slightly and in unison, rock the "PA TUNING" (inner concentric control) and the "LOADING" controls in both opposing and both unopposing directions to locate a final setting where a minor change in either won't adversely affect the respective plate or screen current indication while keeping the adjustment parameters within the specified limits.

NOTE

A forward power output of 130 watts is satisfactory for any frequency above 28 MHz.

s. The tuning mode is now complete. Adjust the "OUTPUT" control for the forward power level that you wish to conduct transmission with and depress the "PTT" switch, thereby placing the Model CX7 in the receive mode.

2.4.3 Normal Transmit Channel Operation

2.4.3.1 Operating with a VSWR Less than 1.5:1

a. Establish a receive mode.

b. Select the desired band with the "MHZ" rotary selector switch.

c. Tune the applicable "VFO A" or "VFO B" control to the desired bandspread frequency.

d. Depress the applicable "TRANSMIT VFO A" or "TRANSMIT VFO B" switch to the latched-in position.

e. Set the "BROADBAND/MANUAL" rotary switch to the "BROADBAND" position.

f. Depress the "FWD PWR" switch to the latched-in position.

g. Depress the "TUNE" switch to the latched-in position.

h. Adjust "OUTPUT" control for a 1.6 forward power meter indication.

i. Depress the "REV PWR" switch to the latched-in position and note the reverse power meter indication. If the indication is "0.2" (1 watt) or less for reverse power and "1.6" (25 watts) or more for forward power, proceed to step j. If the reverse power indication is higher than 0.2, omit step j and proceed to paragraph 2.4.3.2.

j. Depress the "FWD PWR" switch to the latched-in position and adjust the "OUTPUT" control for a 4.2 (150 watts) meter indication.

The Model CX7 can now be keyed for the desired transmission. Prior to changing to a new transmit frequency, perform the following:

1. Establish a receive mode.

2. Use the procedure recommended in paragraph 2.4.3.1b through i.

WARNING

Failure to comply with the previous steps 1 and 2 will result in damage to the Model CX7.

2.4.3.2 Operating with a VSWR Exceeding 1.5:1

a. Establish the receive mode.

b. Set the "BROADBAND/MANUAL" switch to the "MANUAL" position.

c. Depress the "TUNE" switch to the latched-in position.

d. Depress the "SCREEN" switch to the latched-in position.

e. Tune the power amplifier stage using the procedure covered in paragraph 2.4.2r.

f. Depress the "PTT" switch to the latched-in position thereby establishing the receive mode.

The Model CX7 can now be keyed for the desired transmission. Prior to changing to a new transmit frequency, perform the following:

1. Establish a receive mode.

2. Use the tuning procedure recommended in paragraph 2.4.2r.

WARNING

Failure to comply with the previous steps 1 and 2 will result in damage to the Model CX7.

2.4.4 Single Sideband Transmission

a. Perform the operations required for normal transmit channel operation as directed in paragraph 2.4.3.

b. Check that the microphone is connected.

c. Set the "MODE" selector to either the "LSB" or "USB" position as desired.

d. Key the transmitter in accordance with the applicable following paragraphs and conduct transmission as desired.

2.4.4.1 Manual Keying

a. To key the Model CX7 so that actual voice messages can be transmitted, perform either of the following:

1. Depress the "TRANSMIT" switch to the latched-in position.

2. Position the "PUSH-TO-TALK" switch located on the microphone to the "ON" or "TALK" position.

NOTE

Step 1 does not have to be performed if keying is accomplished using step 2.

2.4.4.2 VOX-ANTI-VOX Keying

a. Depress the "VOX" switch to the latched-in position.

b. Set the "VOX GAIN" control (on the rear panel) to the midrange position.

c. Set the "ANTI-TRIP" control (on the rear panel) to 1/4 from the full counterclockwise position.

d. Set the "PUSH-TO-TALK" switch located on the microphone to the "LISTEN" or "OFF" position (additional positioning of this switch is not required).

e. Refine the setting of the "ANTI-TRIP" control to the point just slightly more than the position that permits the Model CX7 to key on ambient noise or audio from the speaker.

f. Refine the setting of the "VOX GAIN" control to the point where the Model CX7 keys at normal voice levels.

NOTE

For best results, use the minimum settings of the "VOX" and "ANTI-VOX" controls as excessive gain in these circuits is not desirable.

g. Normal speech will now switch the Model CX7 from the receive mode to the transmit mode. If spoken end syllables are cut off by the transmitter unkeying, advance the setting of the rear panel "DELAY" control for an appropriate unkeying delay time.

2.4.4.3 Operation of "CLIPPING" Control

a. Depress the "CLIPPING" meter switch to the latched-in position.

b. While conducting a voice transmission, slowly increase the setting of the "CLIPPING" control until the front panel meter registers from S-3 to S-4 during voice peaks. This setting provides approximately 10 DB of clipping causing a significant increase in TALK POWER under conditions of marginal signal to noise. Utilizing the clipping function increases the overall system gain which results in accentuation of background noise. For this reason, it is always desirable to use a minimum amount of clipping.

2.4.5 AM Transmission

a. Perform the operations required for normal transmit channel operation as directed in paragraph 2.4.3 except set the power output for 1.9 (35 watts).

b. Check that the microphone is connected.

c. Set the "MODE" selector to the "AM" position.

d. While conducting a voice transmission, adjust the "CLIPPING" control for a forward power indication of 2.8 (75 watts) during voice peaks.

2.4.6 CW Transmission

2.4.6.1 Normal Telegraph Key Operation

a. Depress the "PTT" switch to the latched-in position.

b. Set the "CLIPPING" control to the "0" position.

c. Set the "MODE" rotary selector to the "CW1" position.

NOTE

The "CW2" or "CW3" positions will interrupt the transmit signal path unless the optional CW filters have been installed.

d. Depressing the telegraph key automatically switches the Model CX7 from the receive to the transmit mode and causes excitation.

e. With the telegraph key depressed, adjust the rear panel "SIDETONE" control for the desired audio signal level. (This may be accomplished with or without power output present.)

f. Releasing the telegraph key automatically causes the Model CX7 to revert back to the receive mode.

2.4.6.2 Paddle Key Operation

a. Connect the paddle key to the applicable rear panel connector.

b. Follow the operating procedure for normal telegraph key operation covered in paragraph 2.4.6.1.

c. With the paddle set to either side position, adjust the "KEYER SPEED" control for the desired number of characters per minute. (This may be accomplished with or without power output present.)

NOTE

When operating at keyer speeds exceeding 25 words per minute, it is recommended that a fan be utilized with its air flow directed on the rear panel heat sink.

2.4.6.3 Offset Channel Operation

a. Normal channel operating procedures are also applicable when in the offset channel mode except the "VFO B" tuning control is not utilized. It is advantageous to use the offset channel mode whenever "VFO A" is being used in the receive mode.

b. Depress the "TRANSMIT VFO-A/T.O." switch to the latched-in position. The decimal point on the right hand Nixie tube illuminates as a visual indication that this mode is being used and has no significance in determining the frequency readout of the KHZ display.

c. Set the "TRANSMITTER OFFSET" (inner concentric control) a few degrees to the left or right of the midrange position.

d. Depress and hold in the "SPOT" pushbutton while adjusting the "SPOT LEVEL" control for a comfortable audio level.

e. While still in the receive mode and with the "SPOT" pushbutton held in, rotate the "TRANSMITTER OFFSET" control from the midrange position toward the right to increase the basic "VFO A" frequency for the transmit mode. If it is desired to offset to a lower frequency, rotate the control from the midrange position toward the left. It is possible to offset the frequency to be transmitted, by as much as 3 kHz, from the "VFO A" channel utilized by the receive mode. The actual amount of offset can only be determined by the audio frequency that is heard whenever the "SPOT" pushbutton is depressed. (This is very similar to spotting a separate CW transmitter and receiver except it is accomplished by the transceiver when in a receive mode.) The amount of offset tracks with the rotation of the "VFO A" tuning control.

CAUTION

It is possible to transmit outside the authorized band when operating near the band edge and subsequently offsetting in the wrong direction.

f. Release the "SPOT" pushbutton and key the transmitter using either the hand or paddle key.

2.4.7 FSK Mode

NOTE

1. FSK transmission is continuous duty operation therefore it is recommended that a fan be utilized with its air flow directed on the rear panel heat sink.

2. It may be necessary to reverse the teletypewriter signal leads to obtain the correct "MARK" and "SPACE" inversion.

a. Set the "MODE" rotary selector switch to the "FSK" position. (This position will interrupt the transmit signal path unless the optional FSK filter has been installed.)

b. Check that the external teletypewriter and FSK tone converter interconnections have been properly connected to the rear panel accessory plug.

c. Depress the "TRANSMIT VFO B" switch to the latched-in position.

d. Adjust the "VFO B" tuning control for the frequency indication of the desired nonshifted frequency.

e. Physically ground the external FSK keyline at the appropriate teletypewriter output terminal.

f. Adjust the front panel "FSK SHIFT" control for the frequency indication on the "MHZ" display for the desired shifted frequency.

g. Remove the ground from the FSK keyline.

h. Tune up the power amplifier stage using "VFO A" tuned to the frequency midrange between the shift in accordance with the recommended procedure in paragraph 2.4.3 and then switch the transmit VFO back to the "B" channel.

i. Proceed with operations as follows:

1. Prior to transmitting from the teletypewriter, depress the "TRANSMIT" switch to the latched-in position.

2. Prior to receiving, depress the "PTT" switch to the latched-in position.

2.4.8 Linear Amplifier Operation. When operating with a linear amplifier, special precautions must be followed when keying the transmitter. The Model CX7 possesses extremely fast T/R keying characteristics that cannot be equaled by linear amplifiers. Consequently, the Model CX7 would be temporarily unloaded, with power output present, during the time a linear amplifier is switching from a receive to a transmit mode.

WARNING

Failure to use manual keying, when the Model CX7 is driving a linear amplifier, will result in damage to the Model CX7. Allow sufficient time for the linear amplifier to switch modes before exciting the Model CX7.

SECTION III

THEORY OF OPERATION

3.1 GENERAL

The CX7 Deluxe Integrated Station provides a broadband transmitter rated for continuous service and a receiver capable of simultaneously processing two different frequency signals within the same band. The frequency range of the CX7 is from 1.8 to 30 MHz. Although considerable use has been made of circuitry common to both transmitter and receiver, extreme versatility has been provided to allow all conveniences of a separate receiver-transmitter station while retaining the operating simplicity of the transceive function.

The CX7 is comprised of a power amplifier assembly, two PTO (permeability tuned oscillator) modules, and one each of the following nine printed circuit boards: Front End board, Power Supply board, BFO board, RF Driver board, Audio board, Counter board, IF board, Hi-Pass Filter board, and AGC Detector board.

The printed circuit board relationship in respect to the transmit or receive signal path is shown in Figure 3-1. In the transmit mode, the signal is routed from the microphone through the Audio board, AGC Detector board, IF board, Front End board, RF Driver board, and PA Assembly to the antenna connector. When operating in the CW mode, signals from a hand key are routed to the RF Driver board or signals from a speed key are routed to the Counter board and then to the RF Driver board. A more detailed explanation of the transmit signal path is covered in paragraph 3.2.

In the receive mode, the signal is routed from the antenna connector through the PA Assembly, Hi-Pass Filter board, Front End board, IF board, AGC Detector board, Audio board, and Power Supply board to the speaker connector. A more detailed explanation of the receive signal path is covered in paragraph 3.3.

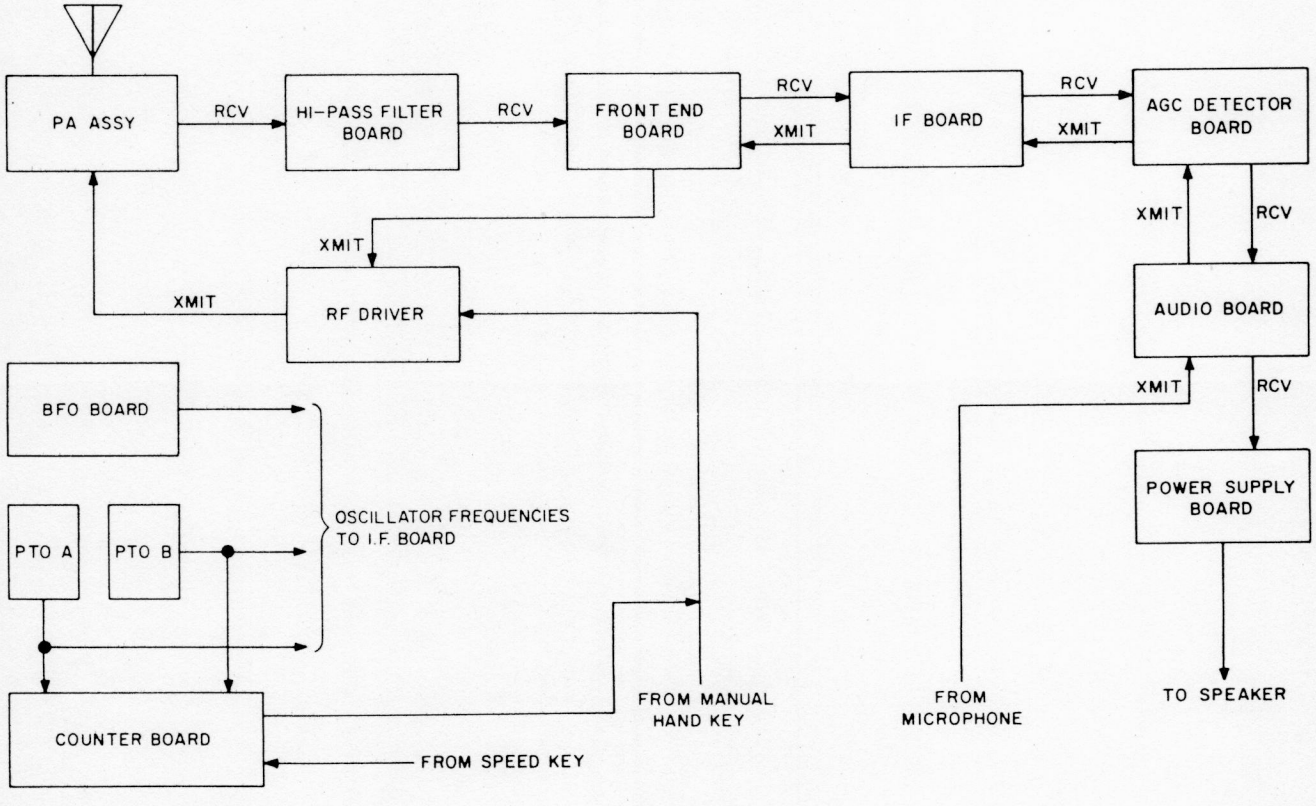

Figure 3-1. Block Diagram of Model CX7 Printed Circuit Boards

Frequencies generated by the BFO board and PTO modules are routed to the IF board mixing stages where they are utilized by both transmit and receive circuitry. An explanation of signal processing in these circuits and other circuits that are common to both transmit and receive modes is covered in paragraph 3.4.

The theory of operation section employs the use of simplified diagrams to supplement the text. Complete schematics are contained in Section VI and should be used in conjunction with the simplified diagrams to determine electrical values and relationships.

3.2 TRANSMITTER CIRCUITRY

3.2.1 Transmit Signal Path

A stage-by-stage transmit signal path block diagram is shown in Figure 3-2. Unless otherwise indicated in the following explanation, it is assumed that the CX7 is operating in the single sideband mode.

Audio signals from the microphone connector J2, on the Model CX7 front panel, are routed to pin 301 on the Audio board, and then to the base of transistor Q1. The nominal signal level at this point is 10 millivolts rms, for frequencies in the range of 400 to 3000 Hz. The audio signal is amplified by transistor Q1 and then routed through variable resistor R12 and coupled to the base of Q2. Phone patch signals from J11, on the rear panel of the CX7, are also routed to the base of transistor Q2 via pin 325 on the Audio board. The amplified output of transistor Q2 is routed through transistor Q3, which is operating as an emitter follower, to output pin 330 on the Audio board. The nominal value of the signal at the output of the Audio board is 100 millivolts, peak-to-peak.

The signal from the Audio board is applied to the AGC Detector input pin 501 and is then routed to one input of the balanced modulator. The balanced modulator is comprised of balanced transformers T1 and T2 and hot carrier diodes CR4 through CR7. The second input of the balanced modulator is a 8.8 MHz carrier signal having a nominal level of 1 VRMS. The 8.8 MHz carrier signal originates in the BFO board and is directed to the balanced modulator via pin 212, on the BFO board, and pin 495 on the AGC Detector board. The balanced modulator mixes the 8.8 MHz carrier with the audio signal to produce a resultant 8.8 MHz double sideband signal with the carrier suppressed approximately 40 DB. The third and higher order modulation products are also suppressed approximately 40 DB below each sideband. The balanced modulator output is routed to the AGC Detector board output pin 500 where the nominal RK signal level is 2 volts peak-to-peak.

The RF signal from the output of the AGC Detector board is applied to IF board input pin 435 and then to one input gate of the dual gate field effect transistor Q14. The other input gate of transistor Q14 is utilized for establishing the clipping level in this stage. The double sideband 8.8 MHz signal is amplified by transistor Q14 and is routed through the 25 kHz bandpass filter FL3 to field effect transistor Q11. The amplified output of transistor Q11 is routed through the 2.4 kHz bandpass filter FL1 to integrated circuit IC5 and IC3. The function of the IC5 stage is to provide further amplification to drive transistor Q5 which is operating as a clipping indication meter amplifier. The function of the IC3 stage is to amplify the double sideband 8.8 MHz signal and to operate as an RF clipper. RF levels at the output of the IC3 stage exceeding 450 millivolts rms, are clipped and routed through an additional 2.4 kHz bandpass filter FL2 to gate G1 of dual gate field effect transistor Q8. When the CX7 is operating in the AM or CW mode, dual gate field effect transistor Q8, on the AGC Detector board, is switched on to provide an 8.8 MHz carrier that is also applied to gate G1 of transistor Q8 on the IF board. (The 8.8 MHz carrier is modulated by one of the sidebands at gate G1 of transistor Q8 on the IF board when in the AM mode.) The other input gate of transistor Q8 is receiving a frequency derived from the mixer stages that are discussed in paragraph 3.4.4. Transistor Q8 on the IF board operates as a mixer and combines the signals on both gates to provide a 39 to 40 MHz IF output that is applied to IF board output pin 421. The RF signal level at pin 421 is a nominal value of 50 millivolts peak-to-peak, and it is routed to the Front End board.

The 39 to 40 MHz RF signal from the IF board is connected to the Front End board input pin 68 and then to field effect transistor Q4. This stage operates as a low noise RF amplifier and its output is applied to integrated circuit IC1. A frequency, determined by the setting of the MHZ bandswitch S7 located on the front panel of the CX7, is generated by crystal oscillator transistor Q7 and is also applied to integrated circuit IC1. The function of IC1 is to mix the 39 to 40 MHz RF signal and the crystal oscillator output to produce a resultant difference frequency. The output of integrated circuit IC1 is routed through a low pass filter comprised of inductors L3 and L4 and capacitors C40 through C43 to the base of transistor Q5 operating as an emitter follower. The output of transistor Q5 is applied to the Front End board output pin 59. The RF

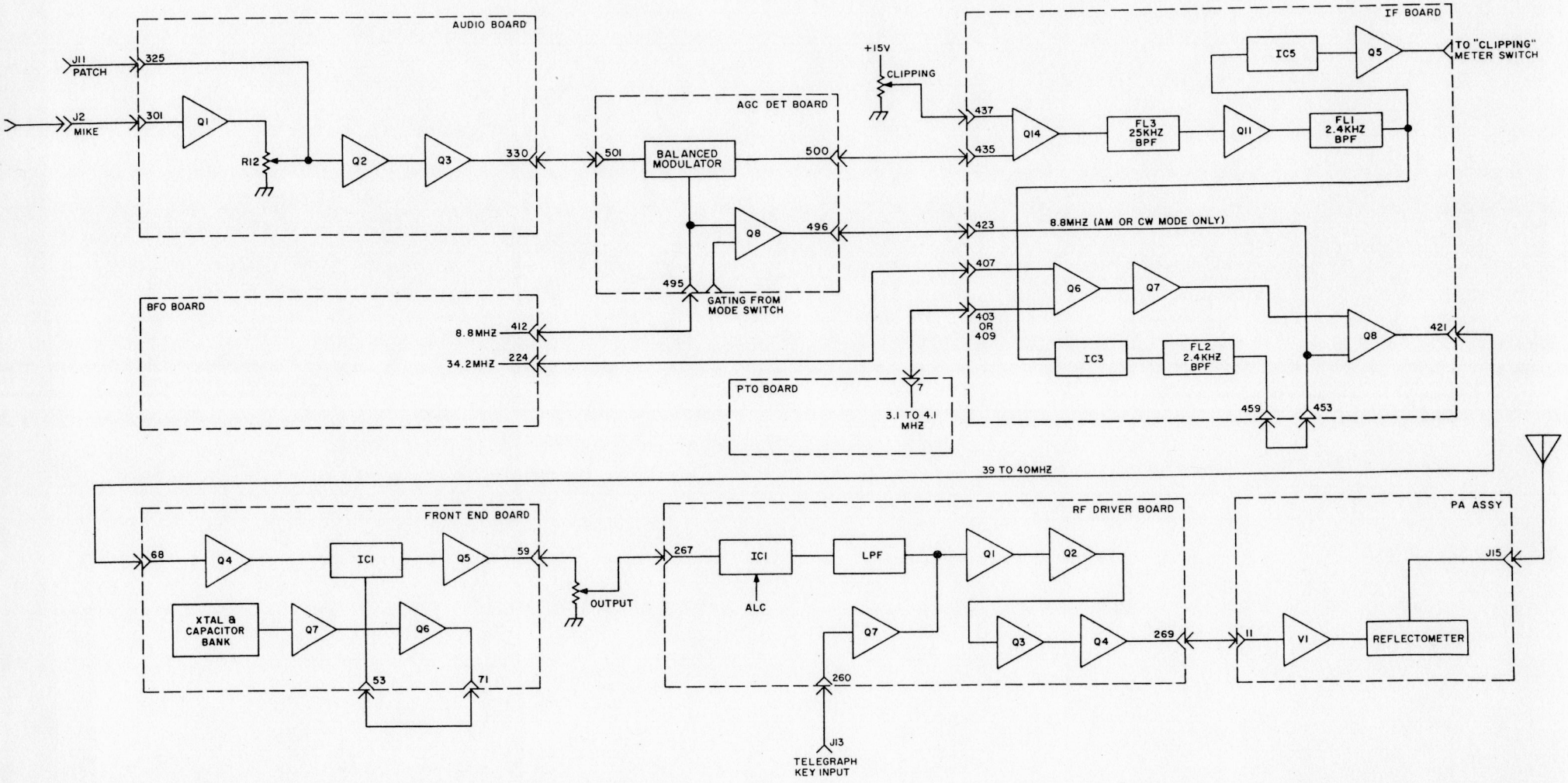

Figure 3-2. Transmit Signal Path Block Diagram

signal level at pin 59 is a nominal value of 300 millivolts, peak-to-peak, and is routed to "OUTPUT" potentiometer R9, located on the front panel of the CX7.

The desired transmit frequency is routed from the wiper of potentiometer R9 to the RF Driver board input pin 267 and then to integrated circuit IC1. This stage operates as a linear differential amplifier receiving automatic level control (ALC) bias to govern the output of the RF drive. The output of integrated circuit IC1 is directed to a low pass filter comprised of inductors L1 and L2 and capacitors C8 through C11. The low pass filter output is directly applied to the gate of field effect transistor Q1. When in the CW mode, the operation of transistor Q1 is enabled or inhibited by the waveshaping amplifier transistor Q7 being turned on or off by command signals from the hand or paddle telegraph key. The amplified output of transistor Q1 is routed through an RF amplifier chain comprised of transistors Q2 through Q4. The operating frequency range of integrated circuit IC1 and transistors Q2 through Q4 is from 1.8 to 30 MHz. Wide band operation without gang tuning is accomplished in these stages by utilizing broad band toroidal coupling transformers and standard degenerative video amplifier techniques. The output of the RF amplifier transistor Q4 is applied to the RF Driver board output pin 269. The RF signal level at this point is approximately 40 volts, peak-to-peak.

The RF output of the RF Driver board is routed to the PA Assembly input pin 11 and is then applied to the control grid of power amplifier tube V1. The power amplifier tube is operating in a grounded cathode passive grid configuration. The output of tube V1 is routed through a toroidal Pi-L network, utilized for plate tuning, to the Reflectometer Assembly. The reflectometer circuitry operates as a power sensor that derives output voltages from the RF current flowing through it. The derived voltages are representative of the forward and reverse power and are utilized for metering purposes. After the RF output of tube V1 passes through the plate tuning circuits and Reflectometer Assembly, it is applied to the main antenna connector J15, located on the CX7 rear panel. The RF power output at connector J15 is a nominal 150 watts on all bands.

3.2.2 Automatic Level Control

Automatic Level Control (ALC) is employed to control the amount of RF drive to the power amplifier tube V1. The ALC method utilized by the CX7 is shown in simplified diagram Figure 3-3. The conduction of transistor Q5 on the RF Driver board is the center of RF drive control and also establishes the fixed operating bias of -20 VDC on the control grid of tube V1. When the base of transistor Q5 is reverse biased by the absence of a ground, the fixed control grid bias drops to -60 VDC thereby cutting-off the plate current. The ground that is used to forward bias the base of transistor Q5 originates in the PA Assembly chassis. It is routed through the energized relay K1 contacts 5 and 12, the PA Assembly output pin 5, the energized one minute time delay relay K1 contacts 4 and 9 (located on the CX7 chassis), the rear panel connector J5 pins 3 and 2, the RF Driver board input pin 259 to one end of variable resistor R31. With no RF drive and the ground present, variable resistors R31 and R34 are adjusted to limit the idling plate current of tube V1 to 100 MA and a transistor Q5 collector potential of zero vdc.

Integrated circuit IC1 functions as a differential amplifier passing maximum RF drive when no ALC voltage is present. The increased conduction of transistor Q5 provides the ALC voltage whenever grid current is drawn by tube V1. The increased collector current of transistor Q5 causes the collector potential to go negative. When the collector voltage of transistor Q5 reaches -12 VDC, zener diode CR1 conducts and the ALC voltage is then applied to integrated circuit IC1 resulting in an inversely proportional decrease in RF drive. The -12 VDC hold-off permits tube V1 to draw its normal 3 MA of grid current due to premature grid emission.

An ALC voltage is also generated by the screen grid current of tube V1. When the voltage drop across Power Supply board resistor R6 exceeds -3.9 vdc, zener diode CR2 conducts and provides a control voltage to integrated circuit IC1.

RF Driver board transistor Q6 functions as a meter amplifier. It amplifies either or both of the ALC voltages.

3.2.3 Sidetone

When the CX7 is in the CW mode, the sidetone circuitry provides an audio tone permitting the code transmission to the RF circuits to be monitored.

A simplified diagram of the sidetone circuitry is shown in Figure 3-4. The audio frequency is generated by the phase shift oscillator transistor Q5, located on the Audio board. In the AM, LSB, and USB modes, the operation of transistor Q5 is inhibited by the presence of a ground being applied to Audio board input pin 319. There are two paths utilized in connecting a ground to pin 319. The first path is through the "MODE" switch S8D contacts 6 and 7, 8, or 9, to ground at E8. The second path is through the "MODE" switch S8D contacts 6 and 10, 11, or 12, and the energized "TUNE" switch S1D contacts 8 and 9 to ground at TB1-6.

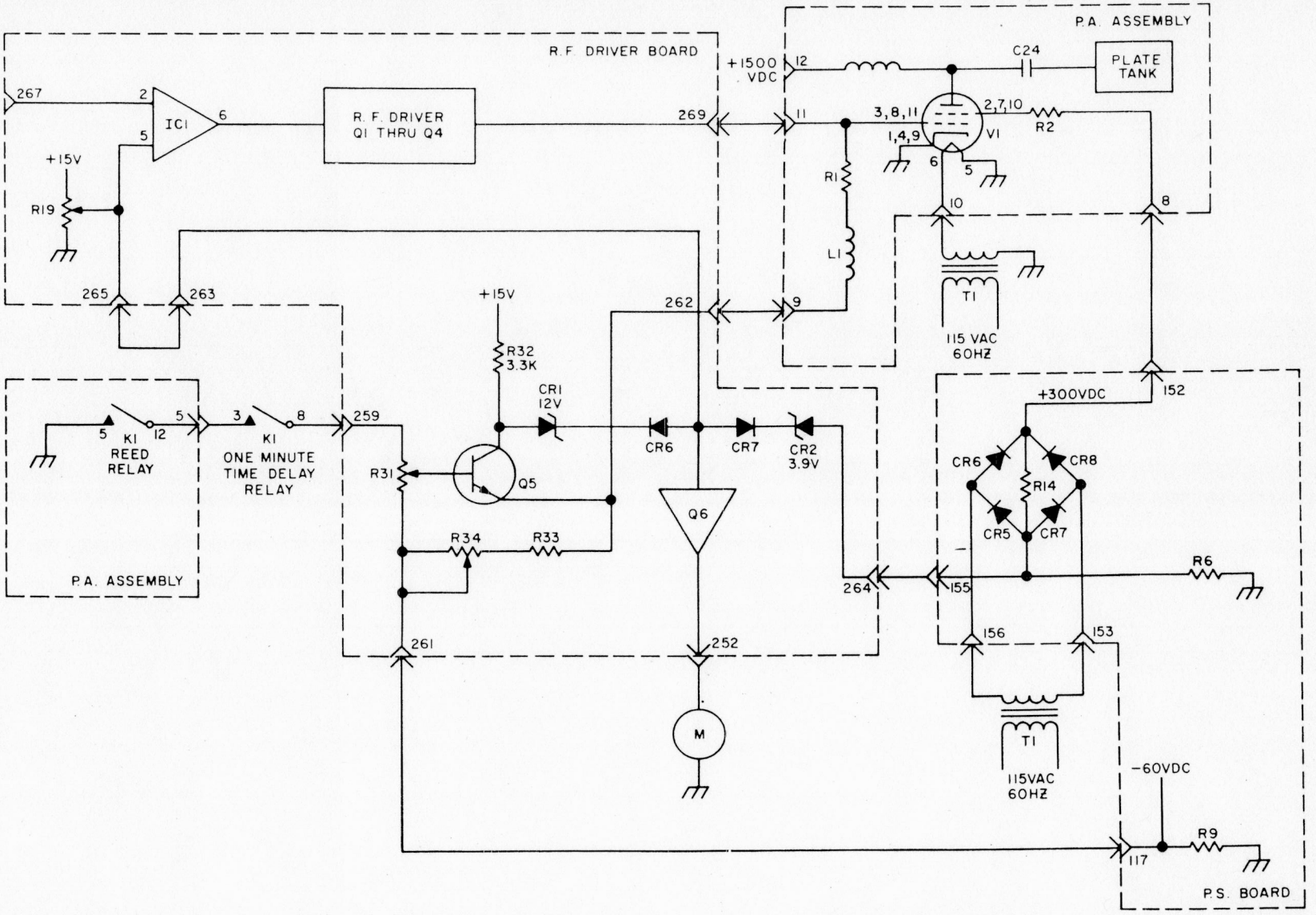

Figure 3-3. Automatic Level Control Simplified Schematic Diagram

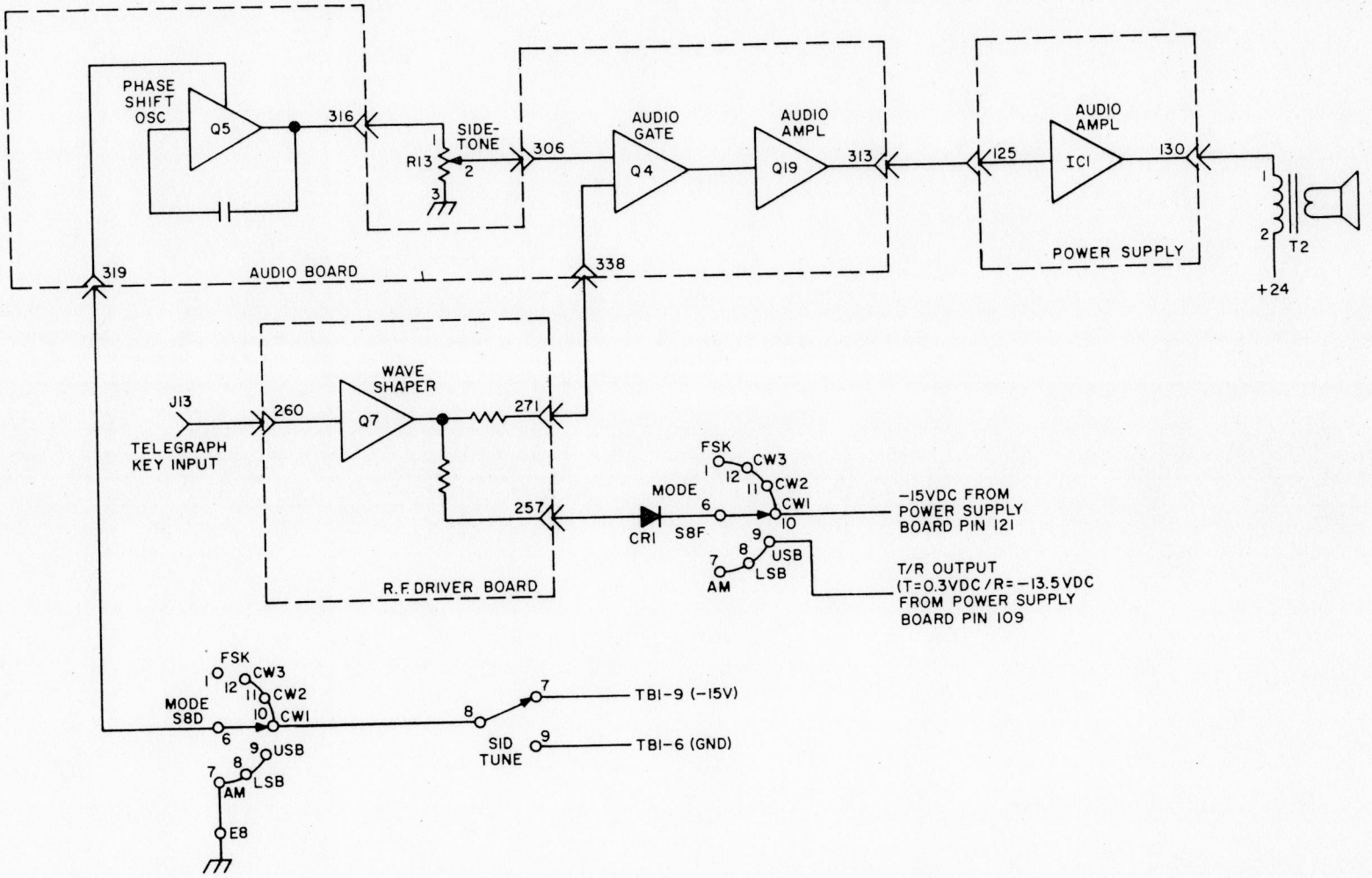

Figure 3-4. Sidetone Simplified Schematic Diagram

In any CW mode and when the "TUNE" switch S1D is in the deenergized position, the operation of transistor Q5 is enabled by the presence of -15 VDC. This is accomplished by routing -15 VDC from TB1-9 through the "TUNE" switch S1D contacts 7 and 8 and the "MODE" switch S8D contacts 10, 11, or 12 and 6 to Audio board pin 319. The audio output signal of the oscillator is connected to Audio board output pin 316 and is then routed to the "SIDETONE" potentiometer R13, located on the CX7 rear panel. The audio tone from the wiper of potentiometer R13 is connected to Audio board input pin 306 and coupled to the source of field effect transistor Q4 which is utilized to gate the audio signal. Transistor Q4 is normally being inhibited by a negative potential routed from the Power Supply board via "MODE" switch wafer S8F contacts 10, 11, or 12 and 6, RF Driver board input pin 257, output pin 271, and Audio board input pin 338. Waveshaping transistor Q7 on the RF Driver board also is normally in an off condition. When an energized telegraph key routes a ground via connector J3 pin 1 on the CX7 rear panel and RF Driver board input pin 260 to the base of transistor Q7, the negative potential inhibiting transistor Q4 is removed by transistor Q7 switching to an "on" condition. This can also be caused by the Counter board keyer output applying a ground to RF Driver board pin 260. The audio signal is then permitted to pass through audio gate transistor Q4 and is amplified by field effect transistor Q19. The audio output of transistor Q19 is connected to Audio board output pin 313 and is routed to Power Supply board input pin 126 and then applied to integrated circuit IC1 which is functioning as a linear audio amplifier. The audio output of integrated circuit IC1 is routed to Power Supply board output pin 130 and then to the primary of audio output transformer T2 located on the CX7 inside rear panel. The secondary of transformer T2 is connected to the "PHONES" connector J1 on the CX7 front panel and to the "SPKR" connector J3 on the CX7 rear panel. Connectors J1 and J3 are interwired so that the speaker output is interrupted whenever the headphones are connected. Transformer T2 also provides a 600-ohm output to "POWER" connector J6 pins 4 and 5.

During voice modes, the operation of the Audio Gate transistor Q4 is enabled by the presence of the +0.3 volt potential in the T/R code but the operation of the phase shift oscillator is inhibited.

3.2.4 Transmitter Enabling

Transmitter enabling is defined as satisfying the pre-requisit conditions that must be present before either RF drive or output power can be developed by the transmitter circuitry.

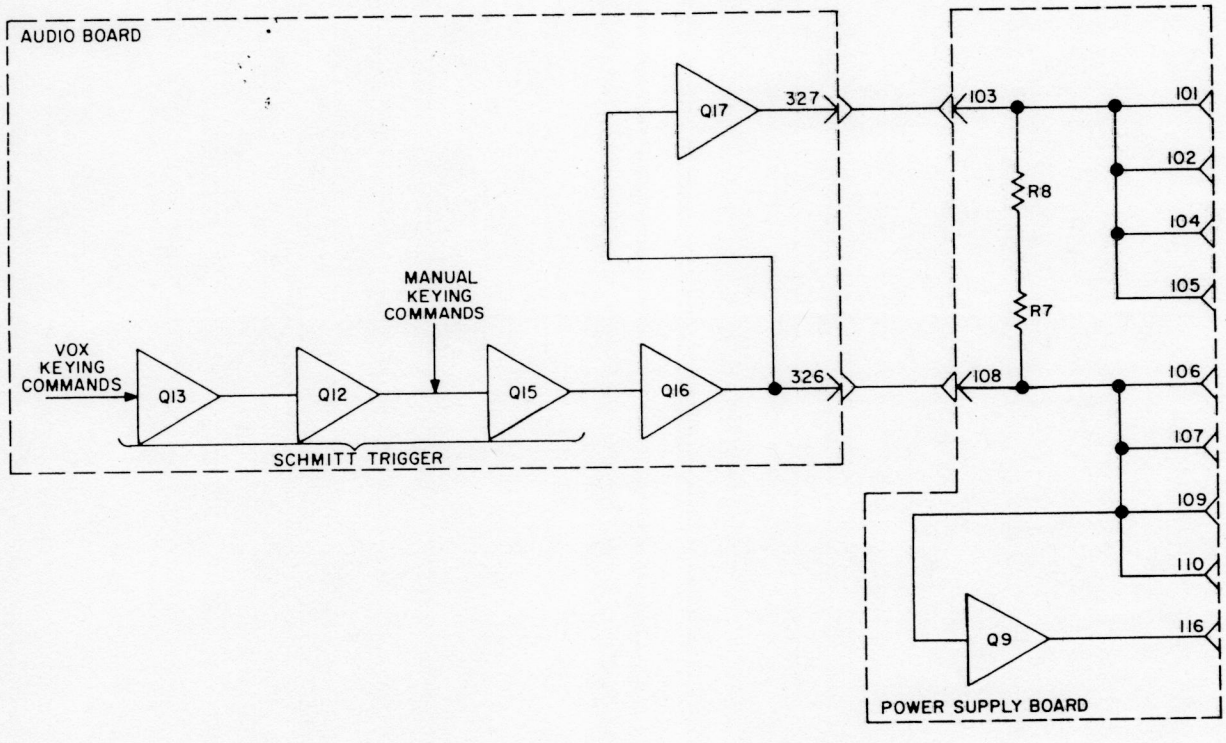

Figure 3-5. T/R and R/T Command Simplified Schematic Diagram

T/R and R/T Commands

Transmit/Receive (T/R) and Receive/Transmit (R/T) commands are complementary voltages, utilized to enable the operation of the transmitter circuits and inhibit the operation of the receiver circuits.

T/R Command

The potential of the T/R command is +0.3 VDC in the transmit mode and -13.5 VDC in the receive mode. Model CX7 wiring utilizes green insulation for the T/R lines. A simplified diagram depicting how the T/R commands are generated is shown in Figure 3-5. The master control for the T/R command is the Schmitt Trigger circuit located on the Audio board. Switching the output state of the Schmitt Trigger can be accomplished either manually or automatically. The desired state of the Schmitt Trigger for a transmit condition is to switch transistor Q15 to an "OFF" condition. This permits the negative collector potential of transistor Q15 to reverse bias the base of transistor Q16 thereby maintaining the collector potential of transistor Q16 at +0.3 volt. This potential is routed to Audio board output pin 326 and then to Power Supply board input pin 108, which is used as a distribution point for the T/R command. The +0.3-volt potential is distributed throughout the CX7 as shown in diagram Figure 3-6.

A -13.5 VDC potential is also used to enable portions of the transmitter circuitry. The base of Power Supply board transistor Q9 is forward biased by the +0.3-volt potential. When this occurs, transistor Q9 provides a -11.1 VDC output that is routed to Power Supply board output pin 116, PA Assembly input pin 2 and then to the coil of reed relay K1 pin 1 which together with the +34 VDC on the other side of the coil causes the relay to energize. When energized, relay K1 grounds the front end of the receiver circuitry and provides a ground to enable the operation of the ALC circuitry.

R/T Command

The potential of the R/T command is +0.3 VDC in the receive mode and -13.5 VDC in the transmit mode. Model CX7 wiring utilizes grey insulation for the R/T lines. The R/T command is generated as shown in Figure 3-5. The +0.3-volt

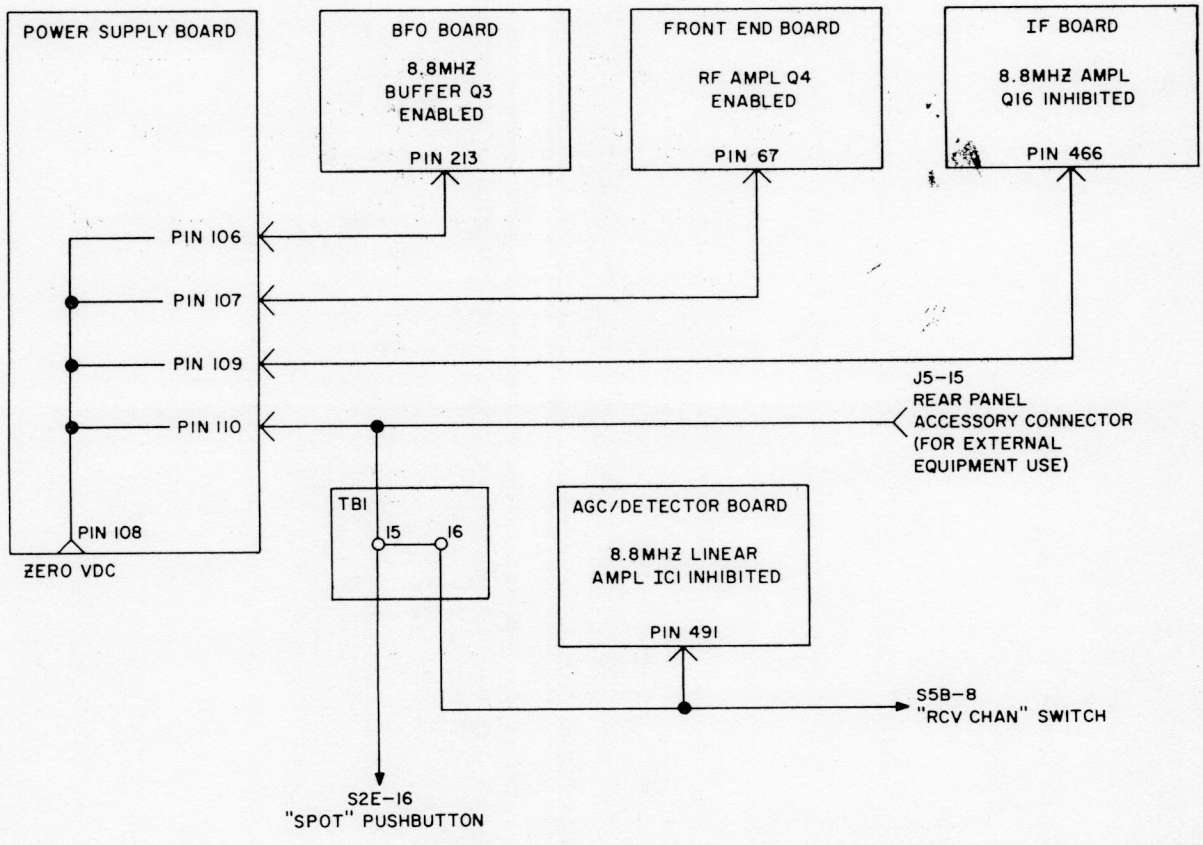

Figure 3-6. T/R Distribution Block Diagram (Transmit Mode)

potential of the T/R command is utilized to forward bias the base of Audio board transistor Q17. This in turn causes transistor Q17 to provide a -13.5 VDC output that is routed to Audio board output pin 327 and Power Supply board input pin 103. Pin 103 is used as a distribution point for the -13.5 VDC potential of the R/T command as shown in Figure 3-7.

Vox Keying

When operating in a voice mode, transmitter enabling is accomplished automatically by the "VOX" circuitry. A VOX keying block diagram is shown in Figure 3-8. Audio signals from the microphone are routed to CX7 front panel "MIKE" connector J2 pin 1 and then to Audio board input pin 301 where it is coupled to the gate of field effect transistor Q1. The amplified audio signal from the output of transistor Q1 is routed to Audio board output pin 336 and then applied to one end of the rear panel "VOX GAIN" variable resistor R10 on the CX7 rear panel. The audio signal from the wiper of variable resistor R10 is routed through the energized front panel "VOX" switch S1E contacts 3 and 2 to Audio board input pin 322 where it is coupled to the base of transistor Q6. The audio signal is amplified by transistor Q6 and is coupled to the base of transistor Q7 for additional amplification. The output of transistor Q7 is coupled to the base of transistor Q8. The base of transistor Q8 is solely dependent on the amplified audio signal for forward bias. When transistor Q8 is forward biased it provides a negative potential that in turn forward biases transistor Q12 causing it to switch to an "ON" condition. The function of the forward biased transistor Q12 is to provide a negative potential to forward bias transistor Q13 in the Schmitt Trigger circuit. When transistor Q12 is switched to an "ON" condition, it also causes the Darlington connected transistors, Q13 and Q14, shown in Figure 3-5, to switch to an "ON" condition which in turn drives transistor Q15 to an "OFF" condition. The "OFF" condition of transistor Q15 is the required output state of the Schmitt Trigger circuit (a negative potential at the collector of Q15). The rear panel "DELAY" potentiometer R12 is used to vary the RC time constant in the emitter of Q12 on the Audio board. With the switching transistor Q12 forward biased by a "VOX" signal, capacitor C28 charges to approximately -14 VDC. Whenever the voltage at the emitter of transistor Q12 drops below the threshold voltage of the Schmitt Trigger, the Schmitt Trigger rapidly switches to its normal state; thereby providing a very positive change of states at its output. This may cause the transmitter to unkey between

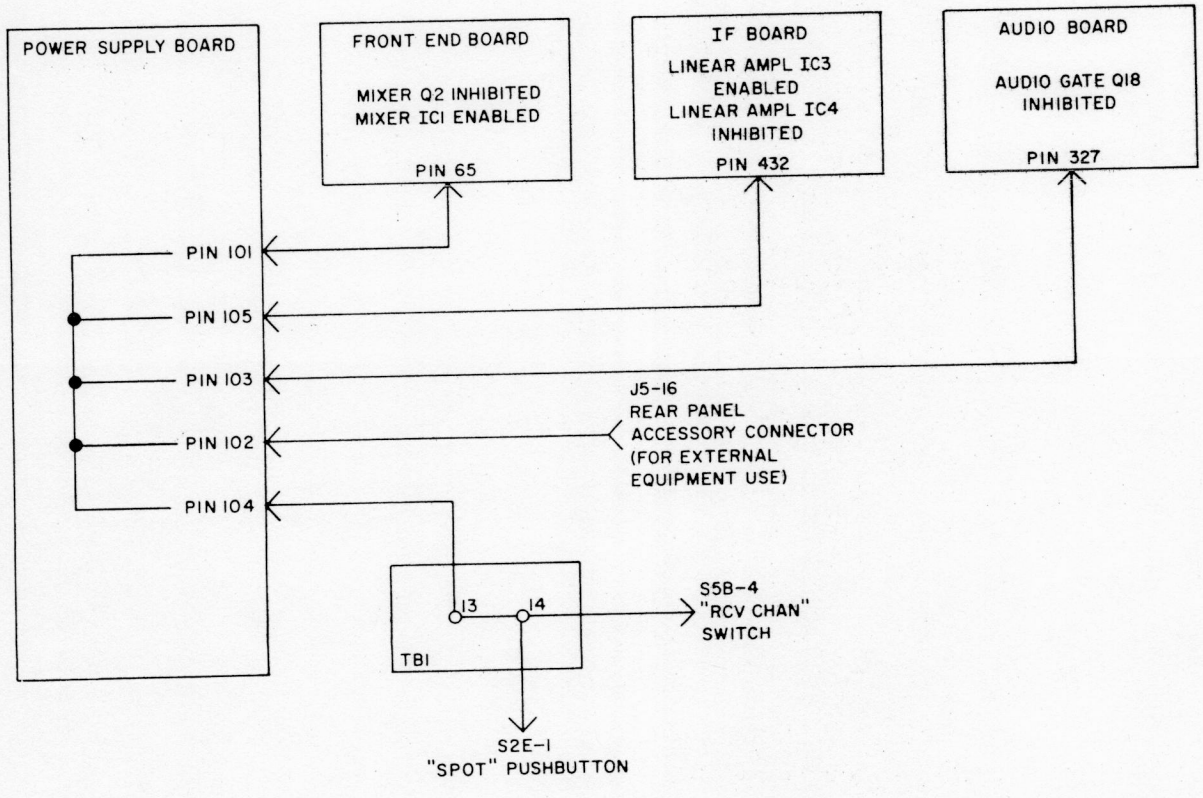

Figure 3-7. R/T Distribution Block Diagram (Transmit Mode)

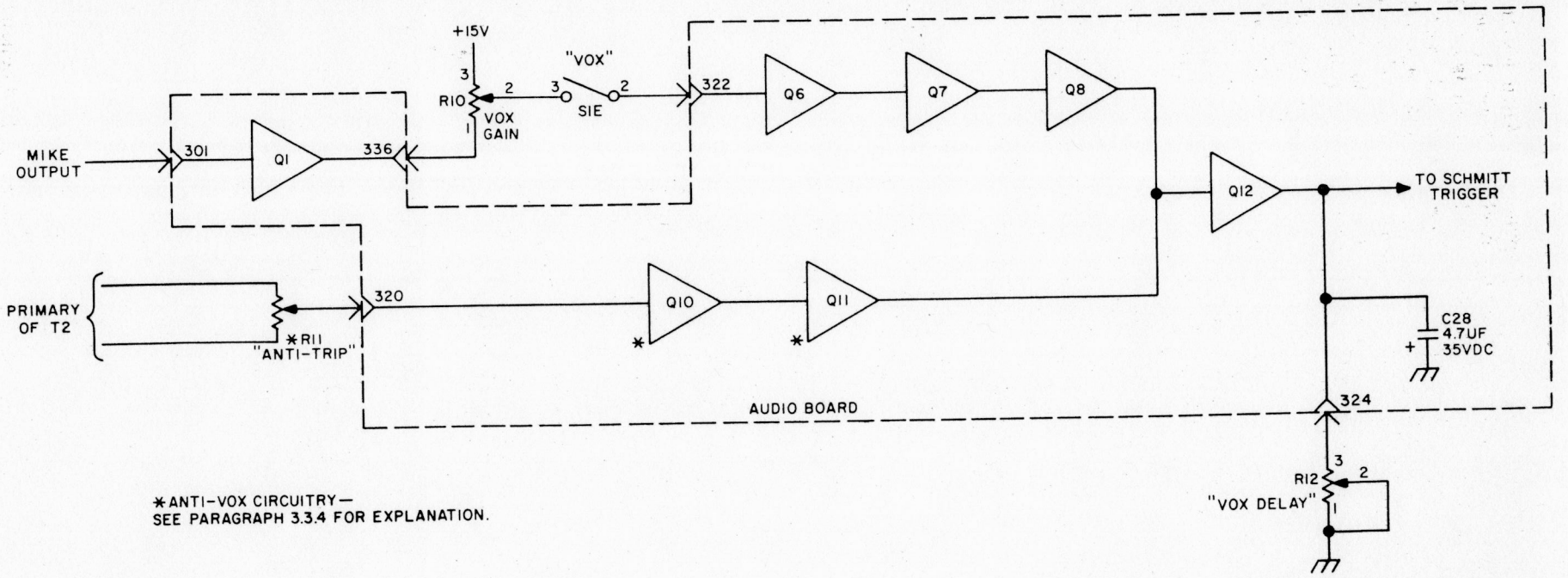

Figure 3-8. VOX Keying Simplified Schematic Diagram

spoken syllables of a lower speech rate. Therefore, it is desirable to keep the transmitter keyed a few milliseconds longer. This is accomplished by increasing the resistance setting of the "DELAY" potentiometer R12 thereby increasing the discharge time of capacitor C28, which in turn, momentarily retains the required base bias of the Schmitt Trigger transistor Q13.

Manual Keying

If it is not desired to use the "VOX" method while operating in the voice mode, transistor Q15 can be switched to an "OFF" condition by either manually depressing the front panel "CONTROL-XMIT" switch S1C or the "CONTROL-TUNE" switch S1D or by energizing an external push-to-talk switch on the microphone. A Manual Keying Signal Path diagram is shown in Figure 3-9.

When either of the previous operations are performed, the forward base bias of Schmitt Trigger transistor Q15 is shorted to ground via Audio board input pin 329, RF Driver board output pin 258, diode CR5, and RF Driver board input pin 260. The ground is provided to RF Driver board pin 260 from terminal board TB1 pin 6 through the energized "CONTROL-XMIT" switch S1C contacts 3 and 2, and "MODE" switch S8C contacts 6 and 1, 9, 7 or 8. The energized "CONTROL-TUNE" switch S1D contacts 5 and 6 can also provide a ground to pin 260. The microphone push-to-talk line from "MIKE" connector J2 pin 3 is another ground source.

When operating in the "FSK" or any "CW" mode, Schmitt Trigger transistor Q15 is switched to an "OFF" condition in a similar manner by routing a ground from the Counter board keyer output

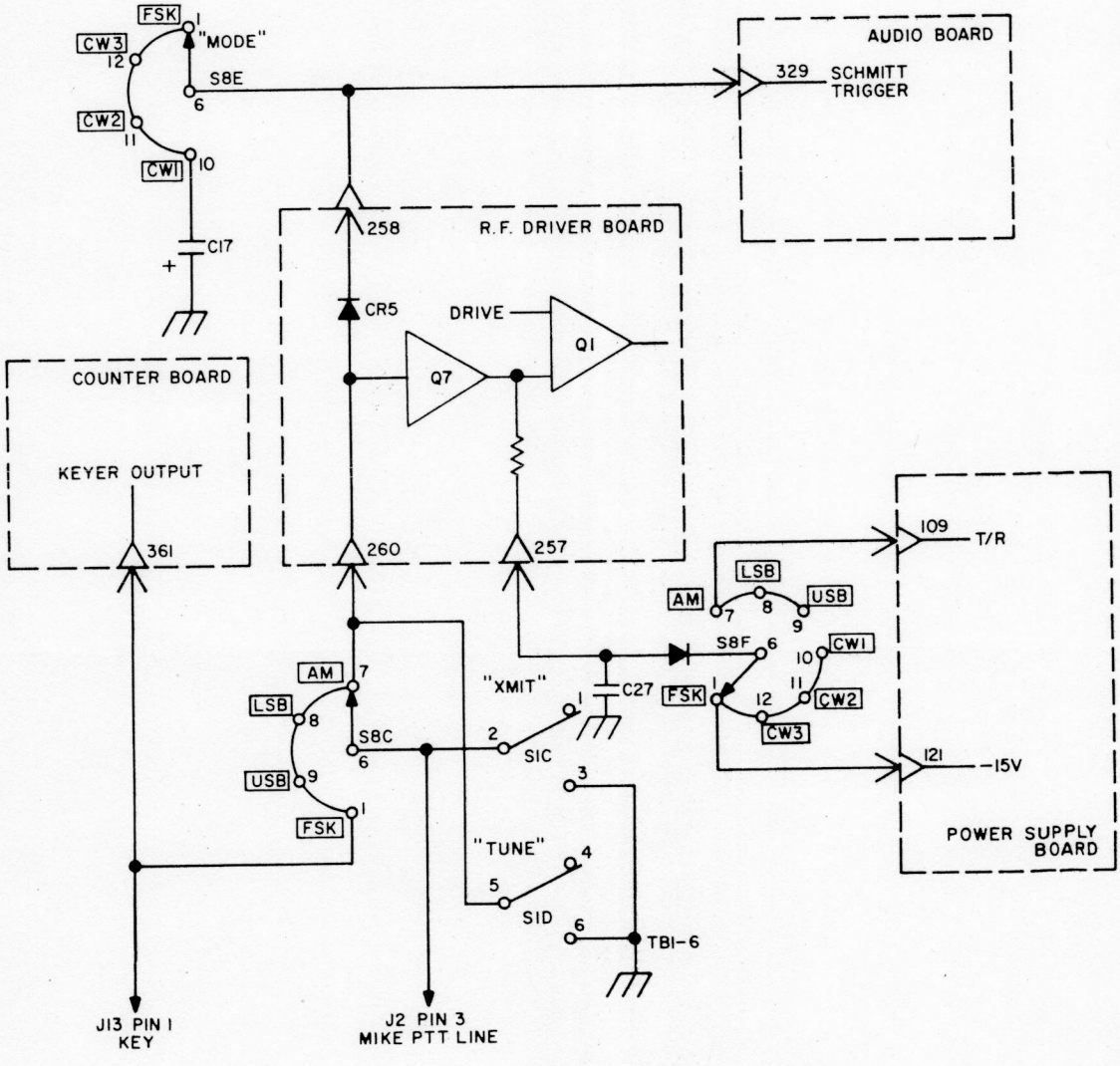

Figure 3-9. Manual Keying Simplified Schematic Diagram

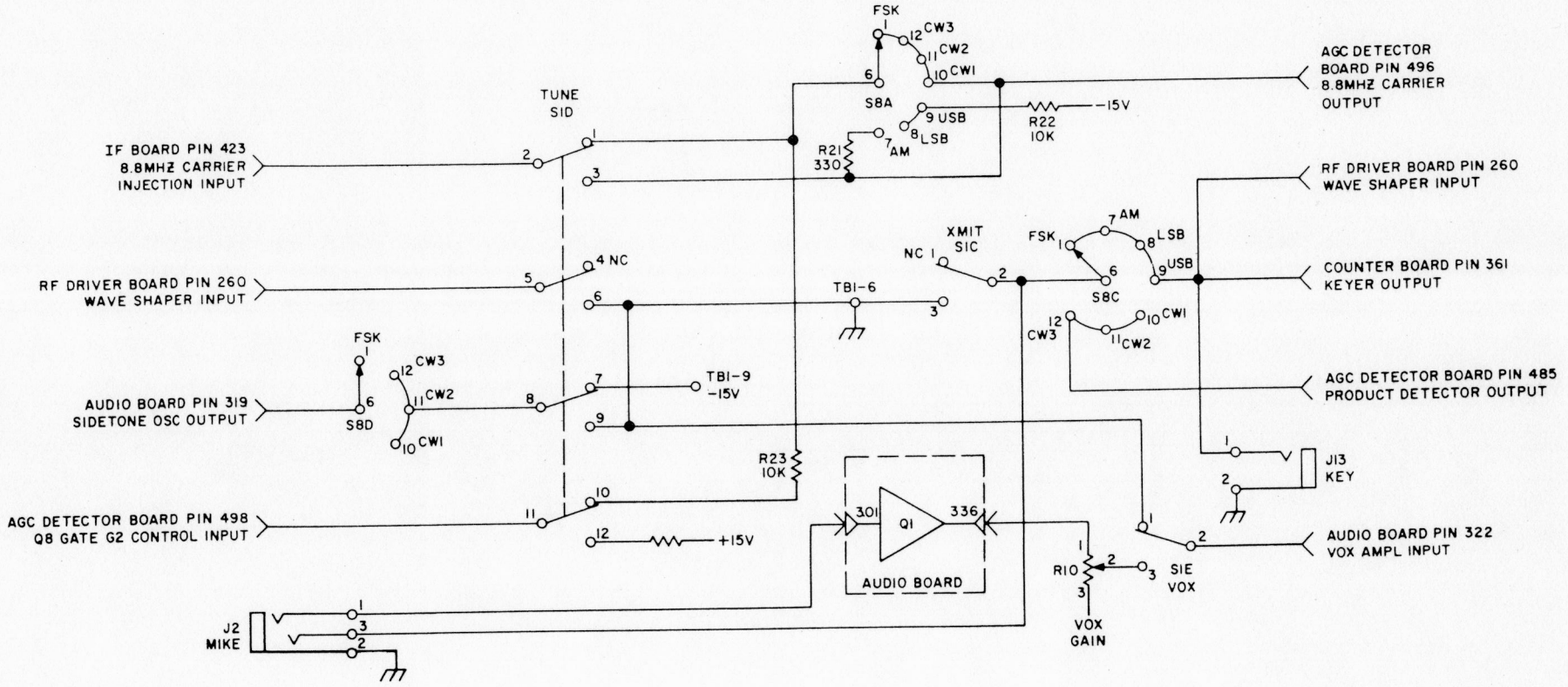

Figure 3-10. Transmit Control Switching Simplified Schematic Diagram

pin 361 or from the rear panel "EXT KEY" connector J13 pin 1 to Audio board input pin 329. In these modes, the ground must also be used to enable the operation of the RF driver circuit. This is accomplished by utilizing the ground to forward bias the base of transistor Q7, which in turn, removes the negative potential that is inhibiting the gate of field effect transistor Q1. With the negative potential removed, transistor Q1 is permitted to amplify the RF drive. The function of transistor Q7 is to increase the rise and fall time of the CW keying signal thereby improving its RF envelope waveshape. Note that the output of transistor Q7 is not used in the voice mode because the T/R command at Power Supply board output pin 109 has switched from -13.5 VDC to +0.3 VDC for a transmit condition. The purpose of capacitor C27 is to lengthen the rise time of the transmitted signal so that full RF output will not instantaneously appear while in the VOX mode. This protects the circuitry of the Model CX7 when used in conjunction with a linear amplifier.

3.2.5 Transmit Control Switching

Transmitter circuitry control switching is accomplished by the proper positioning of front panel "CONTROL-PTT, -TUNE, -XMIT or -VOX" switches. The switches are interconnected as shown in simplified diagram Figure 3-10.

In normal operation, only one of the "CONTROL" switches will be energized at a time and the others will be deenergized. The "CONTROL-PTT" switch is not electrically connected to any circuit and its only function is to mechanically deenergize the remaining "CONTROL" pushbuttons thereby placing the CX7 in the receive mode. The "CONTROL-VOX" switch S1E and the "CONTROL-XMIT" switch S1C were previously discussed in paragraph 3.2.4 for an energized condition. When the "CONTROL-VOX" switch S1E is in the deenergized position, a ground from terminal board TB1-pin 6 is connected to the signal input line of the "VOX" amplifier circuitry on the Audio board. When the "CONTROL-XMIT" switch S1C is in the deenergized position it is in an open circuit condition providing no electrical connections. "CONTROL-TUNE" switch S1D provides the following three interconnections when in the deenergized position: First, a ground is routed from terminal board TB1-pin 6 through contacts 1 and 2 to IF board input pin 423. The ground prevents any stray signals from being introduced into the system at this point when not in the "TUNE" mode. Second, a gating potential from "MODE" switch S8A is routed through resistor R23 and contacts 10 and 11 to AGC Detector board input pin 498 and then to the G2 gate of dual gate field effect transistor Q8. When "MODE" switch S8A is in the "AM", "CW1", "CW2", "CW3" or "FSK" position the gating potential is a positive voltage and in the "LSB" or "USB" position the gating potential is a negative voltage. Third, a -15 VDC potential from Terminal board TB1 pin 9 is routed through contacts 7 and 8 and the "MODE" switch contacts 10, 11, or 12 and 6 to Audio board input pin 319 where it enables the operation of the sidetone oscillator. Energizing (depressing) the "CONTROL-TUNE" switch S1D mechanically causes the "CONTROL-XMIT" switch S1C or the "CONTROL-VOX" switch S1E to deenergize. It also completes the following four electrical interconnections: First, a ground from terminal board TB1 pin 6 is routed through contacts 6 and 5 to RF Driver board input pin 260 which is the key line. Second, a ground from terminal board TB1 pin 6 is routed through switch S1D contacts 9 and 8 and "MODE" switch S8D contacts 10, 11 or 12 and 6 to Audio board input pin 319 where it inhibits the operation of the sidetone oscillator. Third, a +15 VDC potential is routed through contacts 12 and 9 to AGC/Detector board input pin 498 where it is used to forward bias the gate G2 of dual field effect transistor Q8. Under this condition, transistor Q8 passes an 8.8 MHz signal that is then applied to AGC/Detector board output pin 496. Fourth, the signal from AGC/Detector board output pin 496 is routed through switch S1D contacts 3 and 2 to IF board input pin 423 where it is injected into the transmit signal path. The CX7 transmitter circuitry is now fully enabled. This permits manual tuning or testing to be performed. A constant carrier CW output will be present when the Model CX7 is properly tuned.

3.2.6 Automatic Keyer

The automatic keyer circuitry is located on the Counter board. A block diagram of the keyer is shown in Figure 3-11. It is comprised of integrated circuits IC15 through IC17, transistors Q3, Q5, and Q8, and front panel "KEYER SPEED" potentiometer R4. The objective of the keyer is twofold. First, it must not provide an output when unkeyed. Second, when keyed, it provides an automatic dot or dash output that can be adjusted for operating speeds of 5 to 60 words per minute. Unlike the other circuitry on the Counter board, it does not use a clock frequency derived from the 100 kHz oscillator. It has its own frequency source derived from the multivibrator oscillator comprised of transistors Q3 and Q5.

The keyer circuitry will always be in one of three basic conditions as follows: First, the keyer may be in an unkeyed condition. Second, the keyer may be in a condition keyed for a dash. Third, the keyer may be in a condition keyed for a dot.

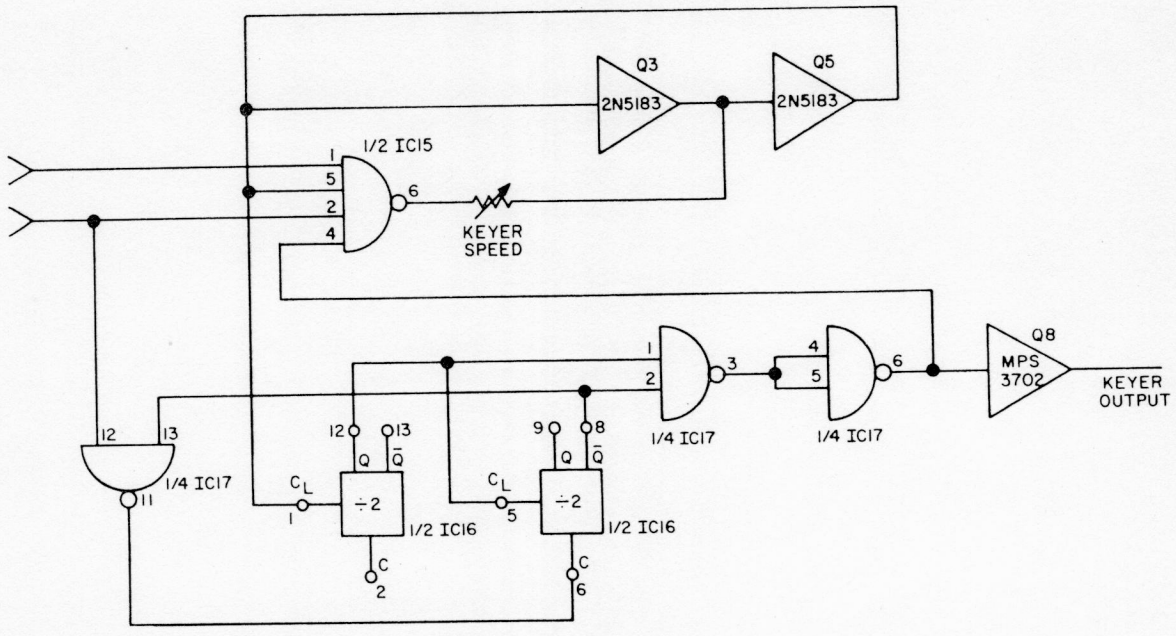

Figure 3-11. Automatic Keyer Logic Block Diagram

In an unkeyed condition, the multivibrator oscillator is not operating because the output state of integrated circuit IC15 at pin 6 is not supplying a positive potential to forward bias the base of transistor Q5. The following unkeyed conditions for the remaining circuitry was produced by the completed dot or dash cycling of events: Integrated circuit IC16 output pin 12 and 8 are at a positive potential causing the output of integrated circuit IC17 pin 3 to be driven to a ground potential which in turn drives IC17 output pin 6 to a positive potential, thereby reverse biasing the base of transistor Q8. Integrated circuit IC15 input pins 1, 2, 4, and 5 each has a positive potential being applied, thereby driving its output at pin 6 to a ground potential.

In a "DOT" condition, a ground is routed from an external speed key to rear panel "KEYER" connector J12 pin 3 then to Counter board input pin 363 and is applied to integrated circuit IC15 input pin 1. The ground causes integrated circuit IC15 output pin 6 to be driven to a positive potential thereby forward biasing the base of transistor Q5. When this happens, the collector potential of transistor Q5 switches from positive to ground and continues to oscillate until integrated circuit IC15 output pin 6 returns to a ground potential. Upon receipt of the second output cycle of the oscillator, integrated circuit IC16 divides the frequency by a factor of two. This output is routed from pin 12 to integrated circuit IC16 pin 5 and IC17 pin 1. The input being applied to integrated circuit IC16 pin 5 is not divided again because the ground potential that is present at input pin 6

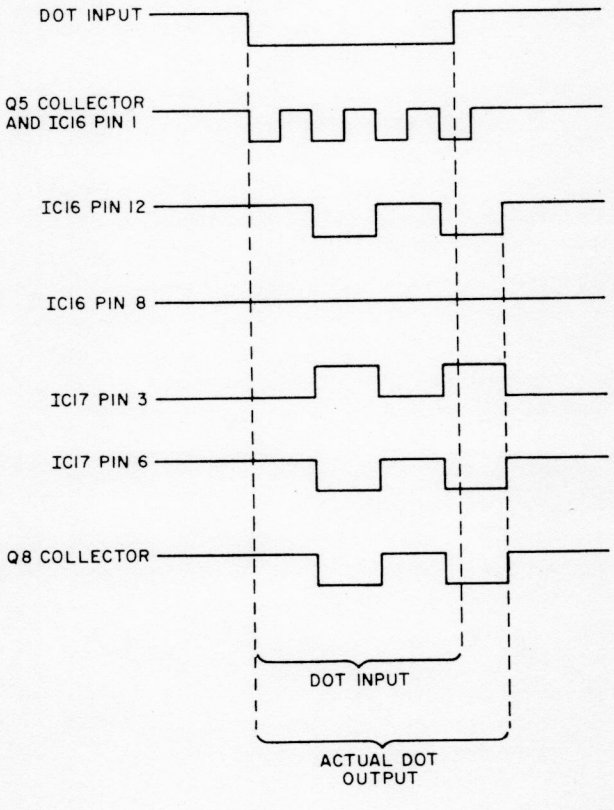

Figure 3-12. "DOT" Generation Timing Diagram

is holding the output at pin 8 at a constant positive potential. Whenever a ground potential from integrated circuit IC16 output pin 12 is applied to integrated circuit IC17 input pin 1 it drives the output at pin 3 to a positive potential which in turn drives the output at integrated circuit IC17 pin 6 to a ground potential. The output from pin 6 is routed to integrated circuit IC15 pin 4 and also to the base of transistor Q8. The ground potential forward biases transistor Q8 causing its collector potential to switch to a ground potential that is used as a "DOT" output at Counter board output pin 361. A recycling of events will occur as long as the "DOT" input to integrated circuit IC15 pin 1 is grounded. If the "DOT" input is removed during the time when a "DOT" ground output is present, the output state of integrated circuit IC17 pin 6, that is being applied to IC15 input pin 4, holds the output at IC15 pin 6 at a positive potential. Thus transistor Q8 remains operational until the newly generated "DOT" output is completed. The description given for the "DOT" condition is pictorially depicted by the timing diagram shown in Figure 3-12.

In a "DASH" condition, a ground is routed from an external speed key to rear panel "KEYER" connector J12 pin 1, then to Counter board input pin 360 and is applied to integrated circuit IC15 pin 2 driving the output at pin 6 to a positive potential. The operation of the multivibrator is enabled as previously described in the "DOT" condition explanation. The "DASH" input ground is also applied to integrated circuit IC17 input pin 12 which causes output pin 11 to switch to a positive potential. This permits the second divide-by-two circuit to be operational. The multivibrator oscillator output that has been divided by two, at integrated circuit IC16 output pin 12, is applied to integrated circuit IC16 input pin 5 and is then divided by two again. The output from integrated circuit IC16 pin 8 is applied to integrated circuit IC17 input pin 13 and IC17 input pin 2. If the "DASH" input is removed during the time when the "DASH" ground output is present, the ground potential from integrated circuit IC16 output pin 8, that is being applied to integrated circuit IC17 input pin 13, holds the output at IC17 pin 11 at a positive potential. Thus, the output from integrated circuit IC17 pin 11 is not permitted to inhibit the operation of the second divide-by-two circuit until the output "DASH" cycle is completed. Both divider outputs are applied to integrated circuit IC17 input pins 1 and 2 respectively. It is the gating action of this integrated circuit that makes the dash output exactly three times the length of the dot output. The outputs of both dividers are 180° out-of-phase with each other and the combined ground

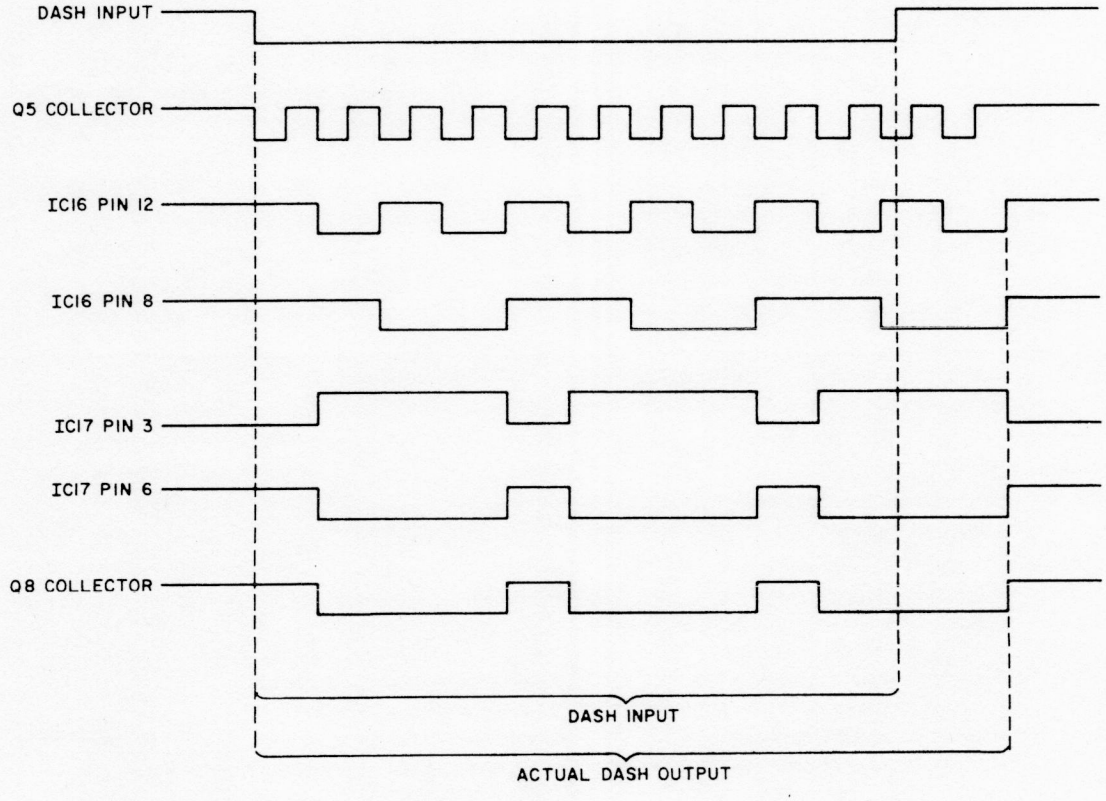

Figure 3-13. "DASH" Generation Timing Diagram

potential being applied to integrated circuit IC17 input pins 1 and 2 drives the output at pin 3 to a positive potential. This output is processed through the keyer circuitry in the same manner as previously described for a "DOT" condition.

The description given for the "DASH" condition is pictorially depicted by the timing diagram shown in Figure 3-13.

3.3 RECEIVER CIRCUITRY

A stage-by-stage receive signal path diagram is shown in Figure 3-14. Unless otherwise indicated in the following explanation, it is assumed that the CX7 is operating in the single sideband mode with the front panel "AGC" switch set to "OFF."

3.3.1 Receive Signal Path

RF signals from the main antenna connector J15, located on the CX7 rear panel, are routed through the PA Assembly reed relay K1 deenergized contacts 18 and 11 to the swinger of the "AUX-COM" switch S9 located on the CX7 rear panel. This switch must be set to the "COM" position if it is desired to receive and transmit using the same antenna. The RF signal from the switch is routed to PA Assembly output connector J14 and then to the input of the High Pass Filter board. The filter prevents commercial broadcast crossmodulation interference from entering the receiver. The RF signal from the High Pass Filter board output pin 521 is connected to the Front End board input pin 76. The level of the RF signal at this point is approximately 0.3 microvolt or more within the 1 to 30 MHz frequency range. The RF signal from input pin 76 is coupled through tuned circuits to gate G1 of dual gate field effect transistor Q1. Gate G2 of transistor Q1 would normally receive an AGC control voltage. Transistor Q1 functions as a highly linear, low noise RF amplifier of wide dynamic range. The output of transistor Q1 is coupled to gate G1 of dual gate field effect transistor Q2. Gate G2 of transistor Q2 is receiving a mixing frequency (being determined by the setting of the front panel "MHZ" selector switch S7) which is generated by the crystal oscillator transistor Q7 and routed through buffer transistor Q6, Front End board output pin 53 and input pin 71. The RF signal and the local oscillator frequency are mixed by transistor Q2 to produce a resultant difference frequency in the range of 39 to 40 MHz. The mixer output is coupled through tuned circuits to gate G1 of dual gate field effect transistor Q3. Gate G2 of transistor Q3 also normally receives an AGC voltage. Transistor Q3 functions as an RF amplifier and its output is coupled through a tuned circuit to Front End board output pin 68. The RF level at output pin 68 is approximately 150 millivolts, RMS at a frequency of 39 to 40 MHz.

The Front End board output pin 68 is connected to IF board input pin 421 and coupled through a tuned circuit to gate G1 of dual gate field effect transistor Q10. Gate G2 of transistor Q10 is receiving a mixing frequency in the range of 30.1 to 31.1 MHz which originates in the mixer stages that are explained in paragraph 3.4.4. The 39 to 40 MHz and the 30.1 to 31.1 MHz frequencies are mixed by transistor Q10 to produce a resultant difference frequency that is exactly 8.815 MHz. The mixer output is routed through a 25 kHz bandpass filter FL3 and coupled to gate G1 of dual gate field effect transistor Q11. Gate G2 of transistor Q11 has a constant fixed bias applied and receives no input, control or command signal. The output of transistor Q11 is applied to the signal input of the noise blanker gate (a detailed explanation of the noise blanking method is given in paragraph 3.3.2). The output of the noise blanker gate is processed through filter FL1, to limit its bandwidth to 2.4 kHz, and is applied to integrated circuit IC3 functioning as a linear amplifier. The signal is then further conditioned by an additional 2.4 kHz bandpass filter FL2 and applied to integrated circuit IC4, also functioning as a linear amplifier. Both integrated circuits IC3 and IC4 receive normal and delayed AGC voltages. The output signal from integrated circuit IC4 is routed through emitter follower transistor Q16 to IF board output pin 465. The nominal level of the 8.8 MHz signal at output pin 465 is 30 millivolts, RMS.

The output from the IF board is connected to AGC Detector board input pin 493 and then coupled to the input of integrated circuit IC1 functioning as a linear amplifier. The output of integrated circuit IC1 drives two different circuits. One is the AGC circuitry, discussed in paragraph 3.3.3 and the other is the product detector transistor Q6. Gate G1 of dual gate field effect transistor Q6 receives the 8.8 MHz sideband signal from integrated circuit IC1 and gate G2 receives an 8.8 MHz carrier frequency via AGC Detector board input pin 487 and BFO board output pin 215. The detected output of transistor Q6 is coupled to AGC Detector board input pin 485. The level of the audio signal is within an approximate range of 50 to 150 millivolts, RMS and is applied to the front panel "AF-GAIN" potentiometer R14.

The audio signal from the wiper of potentiometer R14 is routed to Audio board input pin 308 and is coupled to the gate of field effect transistor Q9. The amplified output from transistor Q9 is passed through the normally enabled field effect transistor Q18, functioning as an audio gate (Q18 is inhibited in the transmit mode) and is amplified by field effect transistor Q19. The output of transistor Q19 is connected to Audio board output pin 313.

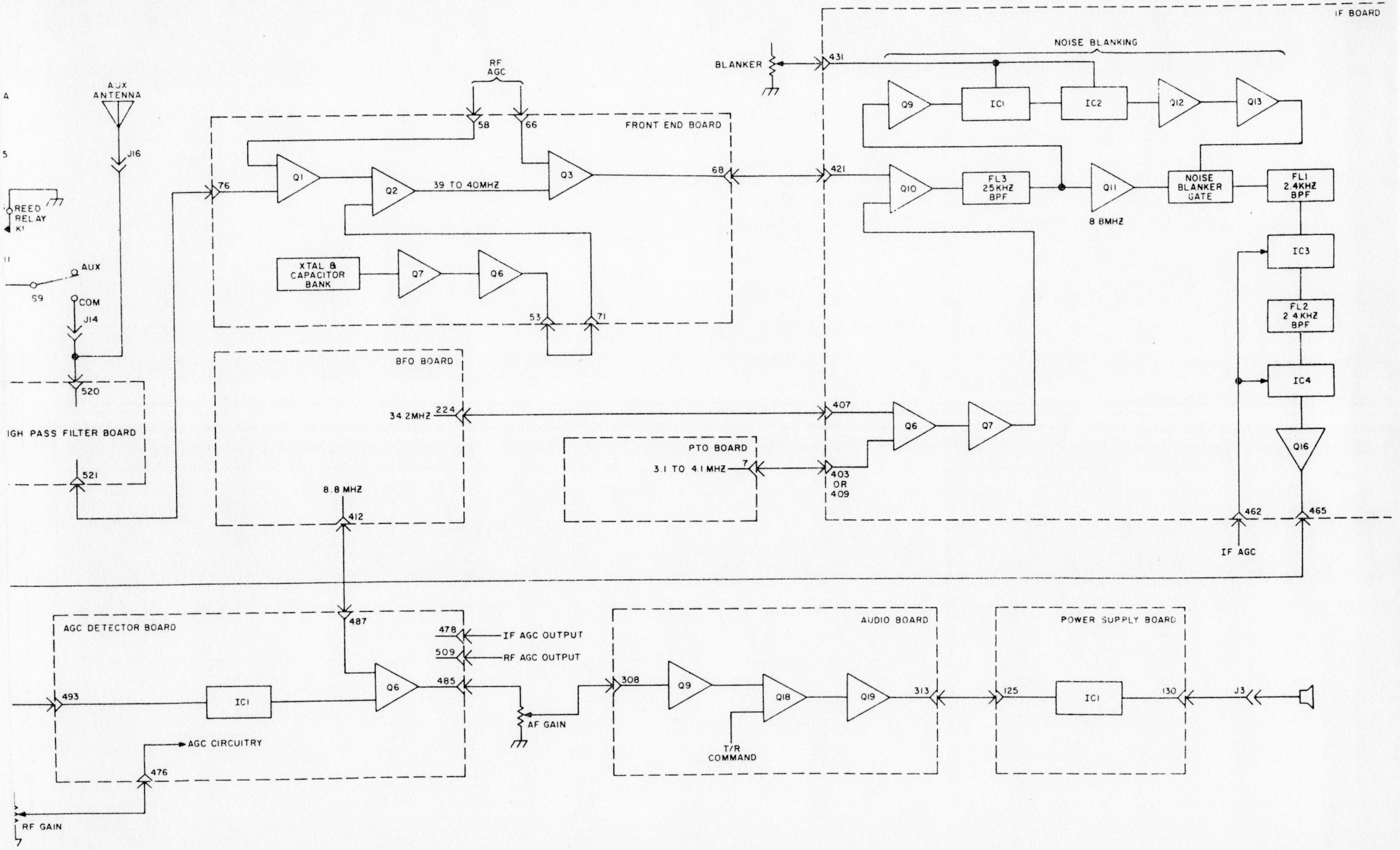

Figure 3-14. Receive Signal Path Block Diagram

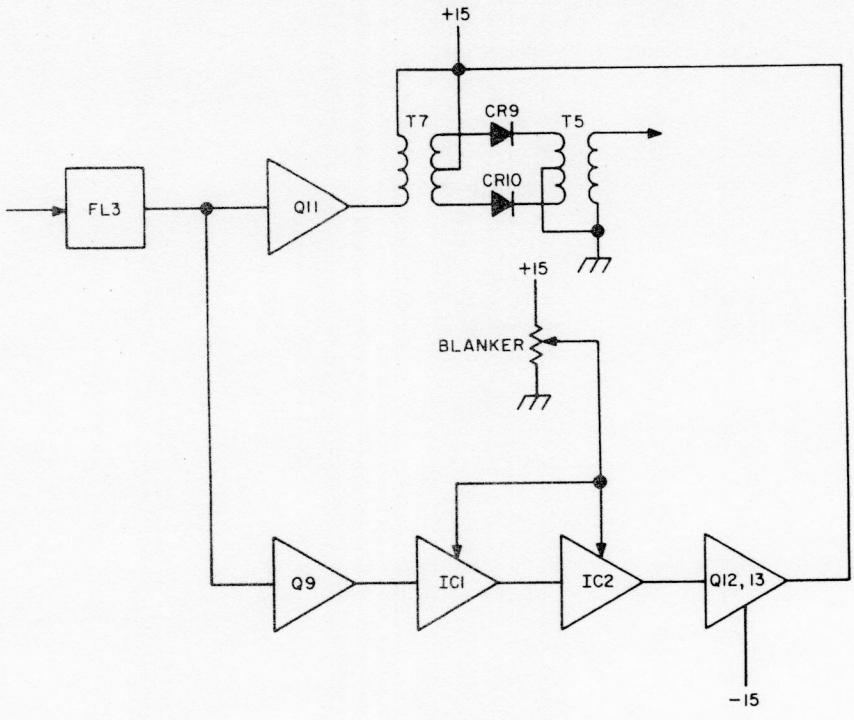

Figure 3-15. Noise Blanker Simplified Schematic Diagram

The signal from the Audio board is connected to Power Supply board input pin 125 and is then applied to integrated circuit IC1 functioning as a linear audio amplifier. The audio output of integrated circuit IC1 is connected to Power Supply board output pin 130 and then routed to the primary of audio output transformer T2, located on the inside rear panel. The secondary of transformer T2 is connected to the front panel "PHONES" connector J1 and the rear panel "SPKR" connector J3. Connectors J1 and J3 are interwired so that the speaker output is interrupted whenever the headphones are connected. Transformer T2 also provides a 600-ohm output to "POWER" connector J6 pins 4 and 5.

3.3.2 Noise Blanker

The noise blanker circuit is utilized by the CX7 to inhibit the received signal from passing through the 8.8 MHz IF stage during the presence of strong RF noise pulses. The operation of the circuit can be manually adjusted by the front panel "NOISE BLANKER" control. A simplified diagram of the noise blanker circuit is shown in Figure 3-15.

The noise blanker circuit is located on the IF board. The 8.8 MHz IF output of bandpass filter FL3 is connected to the gate of field effect transistors Q9 and Q11. The IF signal is amplified by transistor Q11 and is then applied to the primary of transformer T7. The noise blanker gate is comprised of transformers T5 and T7, and diodes CR9 and CR10. When the "NOISE BLANKER" potentiometer R5 on the CX7 front panel is in the "OFF" position, or when no RF noise pulses are present, the Darlington connected transistor detectors Q12 and Q13 are nonconducting. This permits diodes CR9 and CR10 in the noise blanker gate to be forward biased and pass the IF signal. Field effect transistor Q9, integrated circuits IC1 and IC2 along with the Darlington transistor pair Q12 and Q13 comprise an 8.8 MHz noise amplifier. The gain of integrated circuits IC1 and IC2 is controlled by potentiometer R5. When noise pulses are present, they are amplified to an amount sufficient enough to forward bias the base of Darlington connected transistors which, in turn, provides a negative potential that reverse biases diodes CR9 and CR10. Whenever these diodes are reverse biased, the 8.8 MHz IF signal is effectively blocked by the noise blanker gate for the duration of the RF noise pulse.

3.3.3 Automatic Gain Control

The automatic gain control (AGC) is employed by the CX7 to maintain a constant receive signal level passing through the Front End and IF boards. The AGC circuitry can be completely disabled by switching the front panel "AGC" control to the "OFF" position. A simplified diagram of the AGC circuit and the circuitry it controls is shown in Figure 3-16.

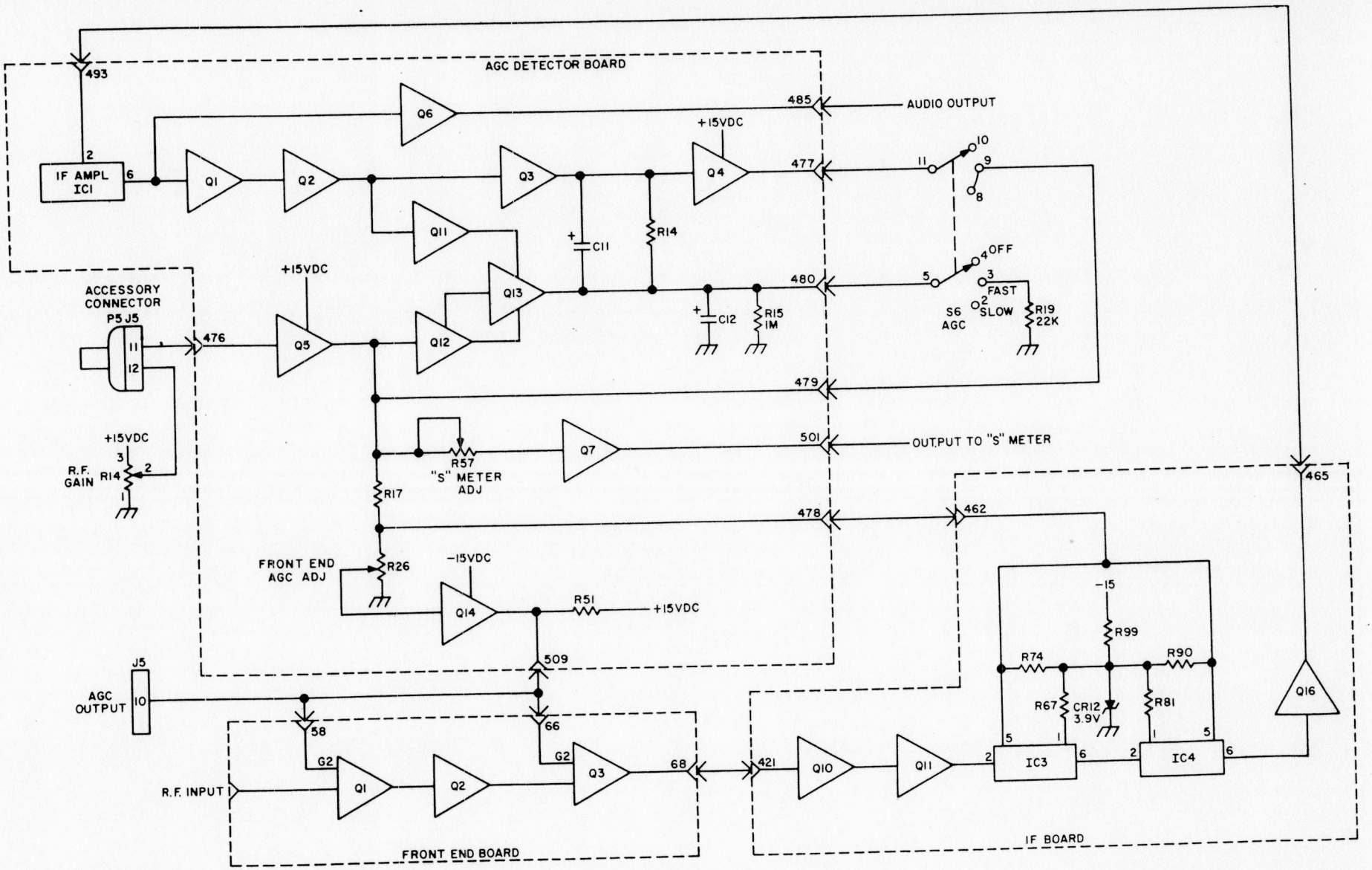

Figure 3-16. Automatic Gain Control Simplified Schematic Diagram

The AGC circuit is located on the AGC Detector board. Its controlling effects can be overridden by setting of the front panel "RF GAIN" potentiometer R14. The AGC circuit provides two primary outputs with an increasing RF input signal level. First, the AGC voltage to the Front End board should be increasing in negative direction. Second, the AGC voltage to the IF board should be increasing in positive direction.

With the front panel "AGC" switch S6 set to the "OFF" position, the front panel "RF GAIN" potentiometer R14 still can control the gain in the Front End and IF boards. A positive potential from the wiper of potentiometer R14 is routed through rear panel connector J5 (accessory connector) pins 11 and 12 to the AGC Detector board input pin 476 and then to the base of transistor Q5 as bias. The amount of positive potential selected by the wiper of potentiometer R14 determines the conduction rate of transistor Q5. Resistors R17 and R26 form a voltage divider operating from the emitter current of transistor Q5. Consequently, the emitter current is responsible for developing the potential to forward bias the base of transistor Q14 and the control bias for integrated circuits IC3 and IC4 to reduce the gain in the RF signal path stages. The conduction of transistor Q14 provides a negative potential that is routed to AGC Detector board output pin 509 and Front End board input pins 58 and 66. The negative potential is utilized to decrease the gain of dual gate field effect transistors Q1 and Q3 on the Front End board. When the potential reaches -0.5 VDC, the transistors are cut off. This AGC voltage is also routed to the rear panel connector J5 pin 10 for auxiliary equipment use.

The positive voltage potential that is present at the junction of resistors R17 and R26 is routed to AGC Detector board output pin 478 and IF board input pin 462. The positive potential provides control bias for integrated circuit IC3 pin 1 and IC4 pin 1. The voltage must be more positive than -3.9 VDC in order to take precedence over the negative voltage developed by Zener diode CR12. If the potential being applied to IF board input pin 462 becomes more positive, the signal output of the integrated circuits decreases. When the potential reaches +3.0 VDC, the integrated circuits are cut off.

The AGC circuit is comprised of transistors Q3, Q4, Q11, Q12, and Q13. When the front panel "AGC" switch is positioned to either "FAST" or "SLOW" and the setting of the "RF GAIN" control is not forward biasing the base of transistor Q5, the emitter current of transistor Q4 must establish the voltage potential at the junction of resistors R17 and R26. Under a no RF signal input condition, transistors Q2 through Q4 are reverse biased permitting the RF signal path stages to operate at maximum gain. With an RF signal present, the same processed receive signal being applied to the input of the product detector is also applied to the input of the AGC amplifier transistor Q1. Transistor Q2 functions as an AGC detector. When the amplified output of transistor Q1 is sufficient enough to forward bias the base of transistor Q2, it conducts, causing transistors Q3 and Q11 to also be forward biased. Capacitors C11 and C12 are permitted to charge at this time which in turn provides forward bias for the base of transistor Q4. The emitter current of transistor Q4 is routed through voltage divider resistors R17 and R26. Consequently, the emitter current is responsible for developing the potential to forward bias the Darlington connected transistors Q12 and Q13. However, the emitter of transistor Q13 is being reverse biased by the conduction of transistor Q11. When the received signal decreases sufficiently to permit the base of transistor Q2 to become reverse biased, transistors Q2 and Q11 immediately switch to an "OFF" condition. During this process, transistor Q14 conduction decreases slowly while capacitors C11 and C12 discharge, but then rapidly due to the action of transistors Q12 and Q13 aiding the discharge by momentarily switching to an "ON" condition.

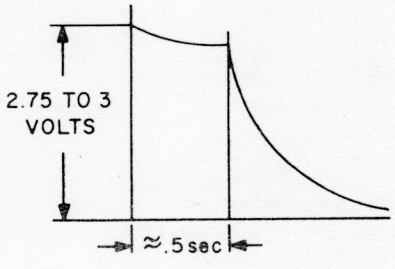

Figure 3-17. "SLOW" AGC Voltage Curve

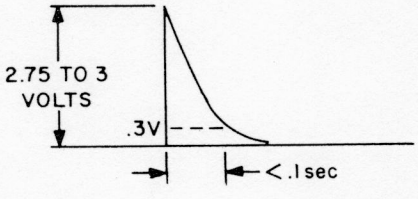

Figure 3-18. "FAST" AGC Voltage Curve

With the "AGC" switch S6 in the "SLOW" position, the resultant AGC voltage curve, as measured at the AGC Detector board output pin 478, is shown in Figure 3-17. With the "AGC" switch S6 in the "FAST" position, resistor R22 increases the discharge time of capacitor C12 as shown in Figure 3-18.

Transistor Q7 functions as a meter amplifier and inverts the AGC voltage producing an output that is relative to the received signal strength.

3.3.4 Receiver Enabling

Receiver enabling is defined as satisfying the prerequisit conditions that must be present in order for the RF signal to be processed through the receive circuitry. If any external source is not supplying a ground to key the transmit circuitry and the front panel "PTT" switch is depressed, the CX7 is automatically in the receive mode. The command signals for receive enabling are generated by the same circuits previously explained in paragraph 3.2.4. However, the input and output state of the applicable transistors are just the opposite for a receive condition.

The CX7 utilizes ANTI-VOX circuitry to ensure that a receive condition is maintained and not changed by speaker noise. A simplified diagram of the ANTI-VOX circuitry is included in the VOX keying diagram shown in Figure 3-8.

The rear panel "ANTI-TRIP" potentiometer R11 is connected across the audio output transformer T2 terminals 1 and 2. Any audio that is present at the speaker is routed from the wiper of R11 to Audio board input pin 320 and coupled to the base of transistor Q10. The amplified output of transistor Q10 is coupled to the base of emitter follower transistor Q11 which has its output direct-coupled to the base of transistor Q12. If the ANTI-VOX audio signal is strong enough, it causes transistor Q12 to switch to an "OFF" condition which, in turn, causes the following transistors to switch to the indicated state:

Transistor	Output State
Q13	OFF
Q14	OFF
Q15	ON
Q16	ON
Q17	OFF

As shown in Figure 3-8, both "VOX" and "ANTI-VOX" signals are applied to the base of switching transistor Q12. The input levels of each signal is adjustable; consequently, the strongest signal will take precedence in determining the resultant base bias of transistor Q12. Under normal operation, the "VOX" signal is usually adjusted to have the larger signal.

3.4 FREQUENCY MIXING NETWORK

This network consists of various oscillators located on the BFO board, two separate PTO modules (VFO), and mixer stages located on the IF board. VFO and BFO signals are processed on the IF board. Front panel controls influencing this network operation include the VFO-A, VFO-B, TRANSMIT-A/T.O., TRANSMIT-A, TRANSMIT-B, SPOT, IF SHIFT, TRANSMITTER OFFSET, RECEIVE CHANNEL SELECTOR, RECEIVE CHANNEL BALANCE, CALIBRATOR, and MODE.

The objective of this mixing network in the transmit mode is to provide a frequency that is utilized for translating the 8.8 MHz SSB to the 39 to 40 MHz transmit IF. The Front End board provides conversion to the actual transmit frequency. While in the receive mode, the objective of this mixer network is to provide a frequency utilized for translating the 39 to 40 MHz receive IF to the 8.8 MHz receive IF and also provides such features as IF Shift, Calibration, and upper and lower sideband functions. In both sideband modes, the VFO provides the means for bandspread tuning.

The basic concept of this frequency mixing network employed by the CX7 is shown in Figure 3-19. The 34.2 MHz source is variable to a slight degree but for preliminary explanation purposes, it is shown as being fixed. The 34.2 MHz frequency is mixed with the VFO oscillator that is tunable throughout the range of 3.1 and 4.1 MHz. The resultant difference output frequency of this mixer is dependent upon the setting of the tunable oscillator and will be in the range of 30.1 and 31.1 MHz. The frequency is mixed with the transmit 8.8 MHz SSB input by transistor Q8 to produce the sum frequency in the range of 39 to 40 MHz. As previously discussed in the transmit signal path explanation, the 39 to 40 MHz IF is further converted by a mixer on the Front End board to the actual transmit output frequency. Bandspread tuning is accomplished solely by tuning the 3.1 to 4.1 MHz VFO oscillator.

In the basic frequency concept explanation, only one 34.2 MHz source and one tunable source feeding a common mixer was utilized. The actual CX7 circuitry employs the use of two 34.2 MHz sources, two tunable sources feeding three separate mixers in order to facilitate dual receive and transmit offset functions. The following paragraphs cover the operation of the PTO, individual oscillators on the BFO board and their interconnections with the mixers.

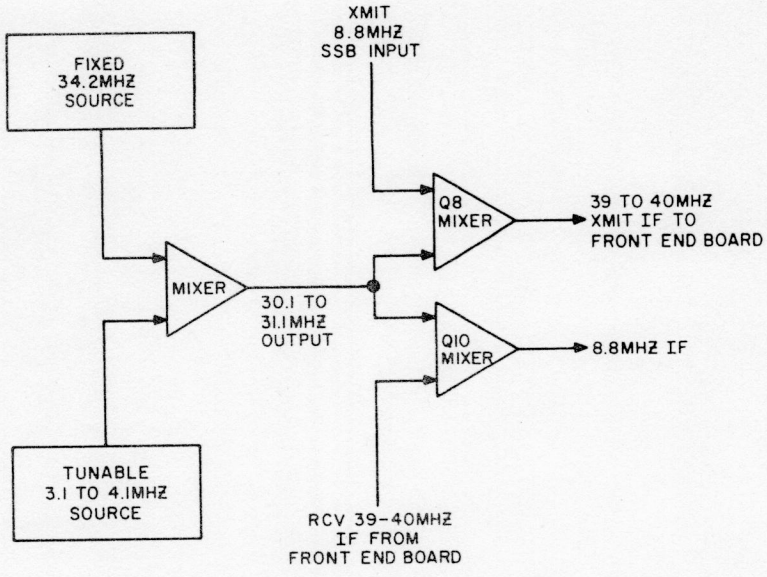

Figure 3-19. Simplified Frequency Mixing Network Block Diagram

3.4.1 Permeability Tuned Oscillators

The 3.1 to 4.1 MHz tunable source utilized by the CX7 is the permeability tuned oscillator (PTO). Figure 3-20 is a simplified block diagram of the PTO. Field effect transistor Q1 and its associated circuitry function as a Colpitts oscillator. The tuned circuit output is rectified by diode CR1 and is used to provide gate bias for transistor Q1. The inductance of inductor L1 is changed by tuning the applicable front panel "VFO-A" or "VFO-B" control. The output of transistor Q1 is routed through buffer transistor Q2 and emitter follower transistor Q3 to PTO board output pin 7. The PTO is enabled or inhibited by switching the gate bias supply of transistor Q1 along with the collector supply of transistors Q2 and Q3. A ground applied to PTO board input pin 4 enables the PTO. A zero or -15 VDC potential applied to pin 4 is utilized to inhibit the operation of the PTO. In PTO A, varactor CR2 is permanently reverse biased by -15 VDC being applied to PTO A board input pin 1, therefore its capacitance does not influence the tuned circuit frequency. In the "FSK" mode, the negative potential being applied to PTO B input 1 can be reduced by the front panel "FSK SHIFT" potentiometer R1. This causes the capacitance change of varactor CR2 to change the tuned circuit frequency up to one kHz.

3.4.2 Normal 34.2 MHz Source

The 34.2 MHz source is also variable permitting the following functions to be accomplished: IF shift, upper and lower sideband frequency generation, and calibration. A simplified diagram of the 34.2 MHz source is shown in Figure 3-21. The 34.2 MHz is obtained by mixing 8.8 MHz and 43.1 MHz and using the resultant difference. The circuitry is located on the BFO board. The IF shift and upper and lower sideband selection is accomplished by changing the characteristics of the 8.8 MHz oscillator. In the AM, FSK, CW or USB mode, the "MODE" switch S8B routes -15 VDC to BFO board input pin 216 and it is then applied to diodes CR4 and CR5. The negative potential forward biases diode CR5 and reverse biases diode CR4 permitting the 8.8165 MHz crystal Y2 to determine the basic frequency of the oscillator integrated circuit IC1. If the "MODE" switch S8B was in the "LSB" position, a positive potential would be applied to forward bias diode CR4 and reverse bias CR5 permitting the 8.8135 MHz crystal Y1 to determine the basic frequency of the oscillator integrated circuit IC1. In the transmit mode transistor Q1 is "ON" and transistor Q2 is "OFF" because T/R commands are applied to their base junctions, therefore the front panel "IF SHIFT" control setting has no effect upon the varactor CR1. In the receive mode, transistor Q1 is "OFF" and transistor Q2 is "ON." (A +0.3 VDC potential is routed from Audio board output pin 326, through the deenergized "SPOT" switch S2E contacts 16 and 17 to BFO board input pin 219 and then to the base of transistor Q1. A -13.5 VDC potential is also routed from Audio board output pin 327, through the deenergized "SPOT" switch S2E contacts 1 and 2 to BFO board input pin 221 and then to the base of transistor Q2.) The front panel "IF SHIFT" potentiometer R6 is connected to the BFO board via input pins 217, 218, and 222. In the receive mode the biasing of transistors Q1 and Q2 provide a negative potential that is routed from the wiper of "IF SHIFT" potentiometer R6 and is then applied to varactor

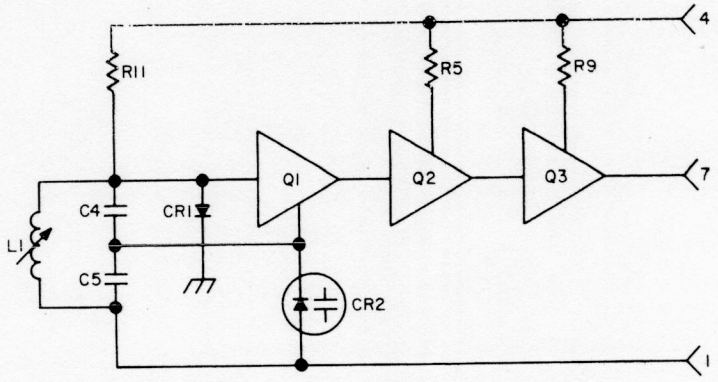

Figure 3-20. PTO Simplified Schematic Diagram

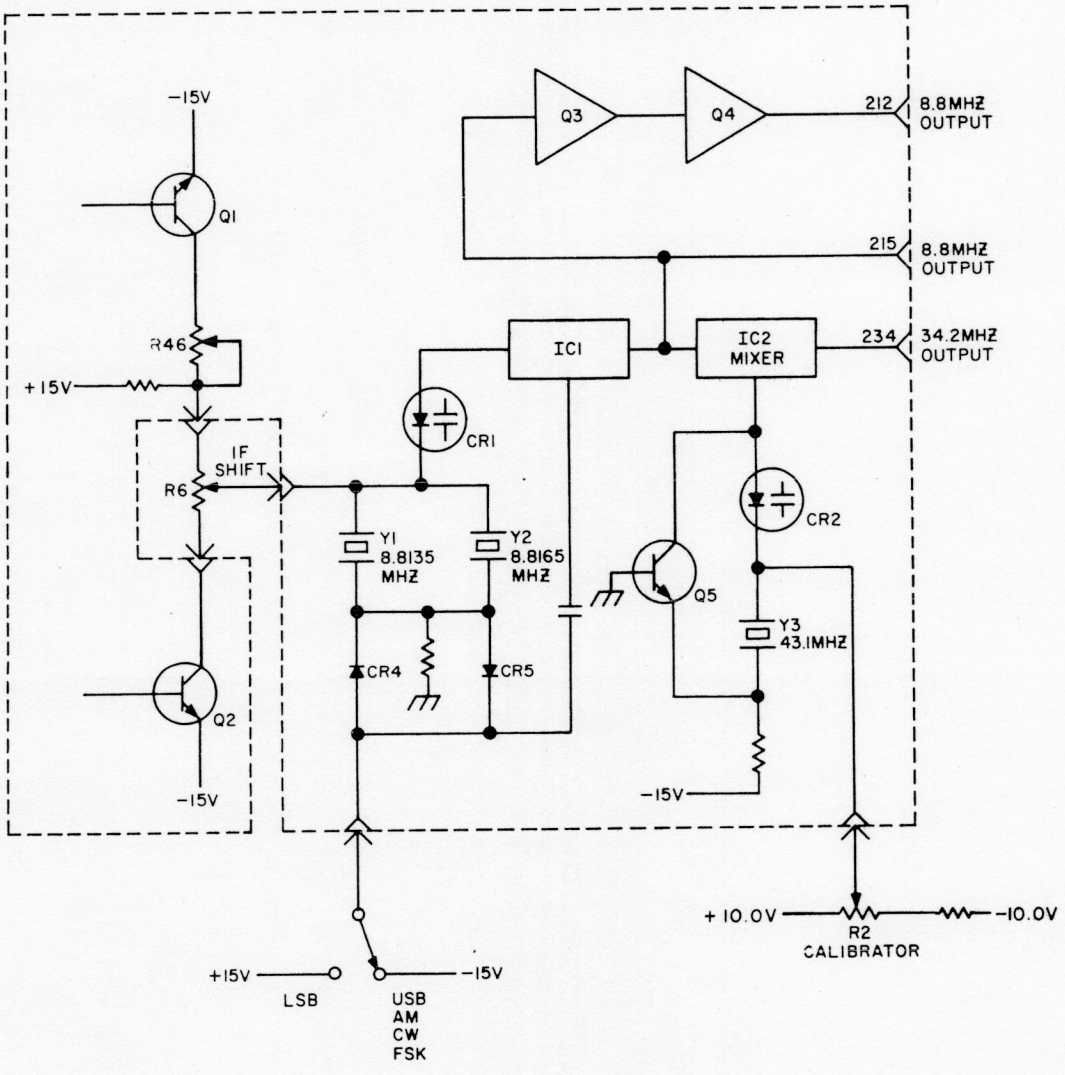

Figure 3-21. Normal 34.2 MHz Oscillator Simplified Schematic Diagram

CR1. The setting of potentiometer R6 determines the bias of varactor CR1 causing its capacitance change to shift the 8.8 MHz oscillator frequency by a specific amount in the range of ±1.6 kHz from the selected sideband frequency. This permits an unwanted receive frequency to be shifted outside of the bandpass of the IF board filters. The 8.8 MHz oscillator provides three different outputs. One output is coupled to buffer amplifier transistor Q3. The output of transistor Q3 is coupled to emitter follower transistor Q4 and its output is routed to the BFO board output pin 212 and then to the AGC Detector board input pin 495. This 8.8 MHz frequency is utilized by the AGC Detector board balanced modulator and single sideband gate circuitry. The second output of the 8.8 MHz oscillator is routed directly to the AGC Detector board product detector circuit via BFO board output pin 215 and AGC Detector board input pin 487. The third output of the 8.8 MHz oscillator is coupled to integrated circuit mixer IC2.

The 43.1 MHz oscillator is comprised of transistor Q5, 43.1 MHz crystal Y3, and varactor diode CR2. This circuitry is also located on the BFO board. A negative potential from the wiper of the front panel "CALIBRATOR" potentiometer R2 is routed to diode CR2 via BFO board input pin 202. The setting of potentiometer R2 determines the bias of diode CR2 causing its capacitance change to shift the overall 43.1 MHz oscillator frequency by a specific amount in the range of ±1.5 kHz. This permits errors in the Front End board local oscillator crystals to be corrected.

3.4.3 Offset 34.2 MHz Oscillator

The offset 34.2 MHz oscillator is only utilized in the transmit mode. It has a wider variable range than the 34.2 MHz source previously discussed. A simplified diagram of the offset 34.2 MHz oscillator is shown in Figure 3-22. The oscillator frequency is determined by the 11.4278 MHz crystal Y4 and the setting of the front panel "TRANSMITTER OFFSET" potentiometer R8. Integrated circuit IC3 functions as an oscillator. The output tuned circuit selects the third harmonic of 34.2 MHz. The entire circuit functions as an oscillator and tripler; consequently, the forward bias of varactor diode CR3 can change the output frequency by as much as ±3 kHz. The 34.2 kHz frequency is routed to BFO board output pin 207 and then to IF board input pin 405.

3.4.4 VFO Mixers

The VFO associated mixers are dual gate field effect transistors located on the IF board. A simplified diagram of these mixers is shown in Figure 3-23. Transistors Q4 and Q5 function as spotting mixers providing an audio output frequency that is the resultant difference between the two RF inputs. Transistors Q2, Q3, and Q6 also operate as difference mixers providing a 30.1 to 31.1 MHz output and independently function identically as the 30.1 to 31.1 MHz mixer discussed in the basic CX7 VFO concept. Transistors Q1 and Q7 function as buffer amplifiers. The transmit mixer transistor Q8 and the receive mixer transistor Q10 are also the same transistors that were discussed in the basic VFO concept. During the dual receive mode, transistors Q3 and Q6 are the only mixers that are utilized at the same time and in all other modes, transistors Q2 through Q6 are only used one at a time for their specific function. The mixer transistors are enabled and inhibited by switching the potentials applied to the gate G2 lead resistor. A zero VDC or ground potential enables the mixer and a -15 VDC potential inhibits the mixer. The commands are routed through the "TRANSMIT VFO-A", "TRANSMIT VFO-B", "TRANSMIT VFO-A/T.O.", "SPOT", and "RECEIVE CHANNEL" switches.

Figure 3-24 shows how the mixers and oscillators are interconnected through the network of switches. Table 3-1 is provided for a quick reference to determine what stages are being enabled and inhibited for various switch positions. Mixer transistor Q5 is enabled only when the "SPOT" switch is depressed and provides an audio output when the difference between the two PTO output frequencies is in the audio range. Mixer transistor Q4 is only enabled when the "SPOT" switch is depressed and the "TRANSMIT VFO-A/T.O." switch is energized. Transistor Q4 provides an audio output when the difference between the two 34.2 MHz frequencies is in the audio range. The output of transistors Q5 and Q4 is routed to IF board output pin 413 and then to the front panel "SPOT LEVEL" potentiometer R3. The signal from the wiper of potentiometer R3 is routed to Audio board input pin 310 and then coupled into the audio amplifier circuitry. Mixer transistor Q2 only functions in the transmit mode and receives an RF input from the 34.2 MHz offset oscillator and PTO A. Transistor Q2 is only enabled by a T/R command during a transmit condition when the "TRANSMIT VFO-A/T.O." switch is energized. Mixer transistor Q3 receives RF inputs from the normal 34.2 MHz source and PTO A.

When the front panel "RECEIVE CHANNEL" switch S5B is set to the "DUAL" position and the front panel receive balance potentiometer R7 is centered in its range, mixer transistors Q3 and Q6 are both enabled. This biasing condition permits the CX7 to process the demodulation of two separate signals. The 34.2 MHz frequency signal level being applied to transistors Q3 and Q6 remains the same. The transistor itself is cut off by the application of proper DC logic to gate 2.

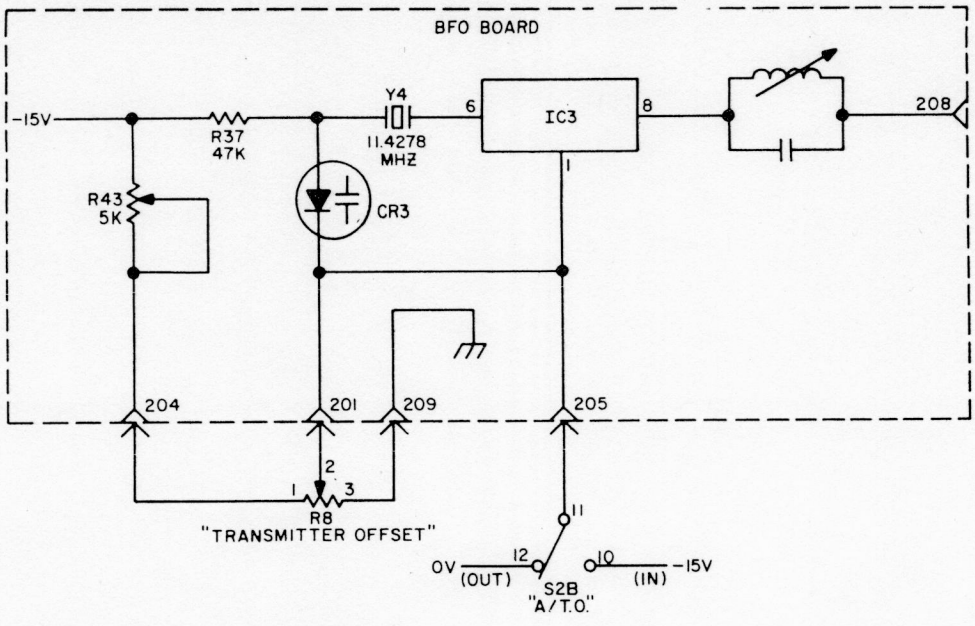

Figure 3-22. Offset 34.2 MHz Oscillator Simplified Schematic Diagram

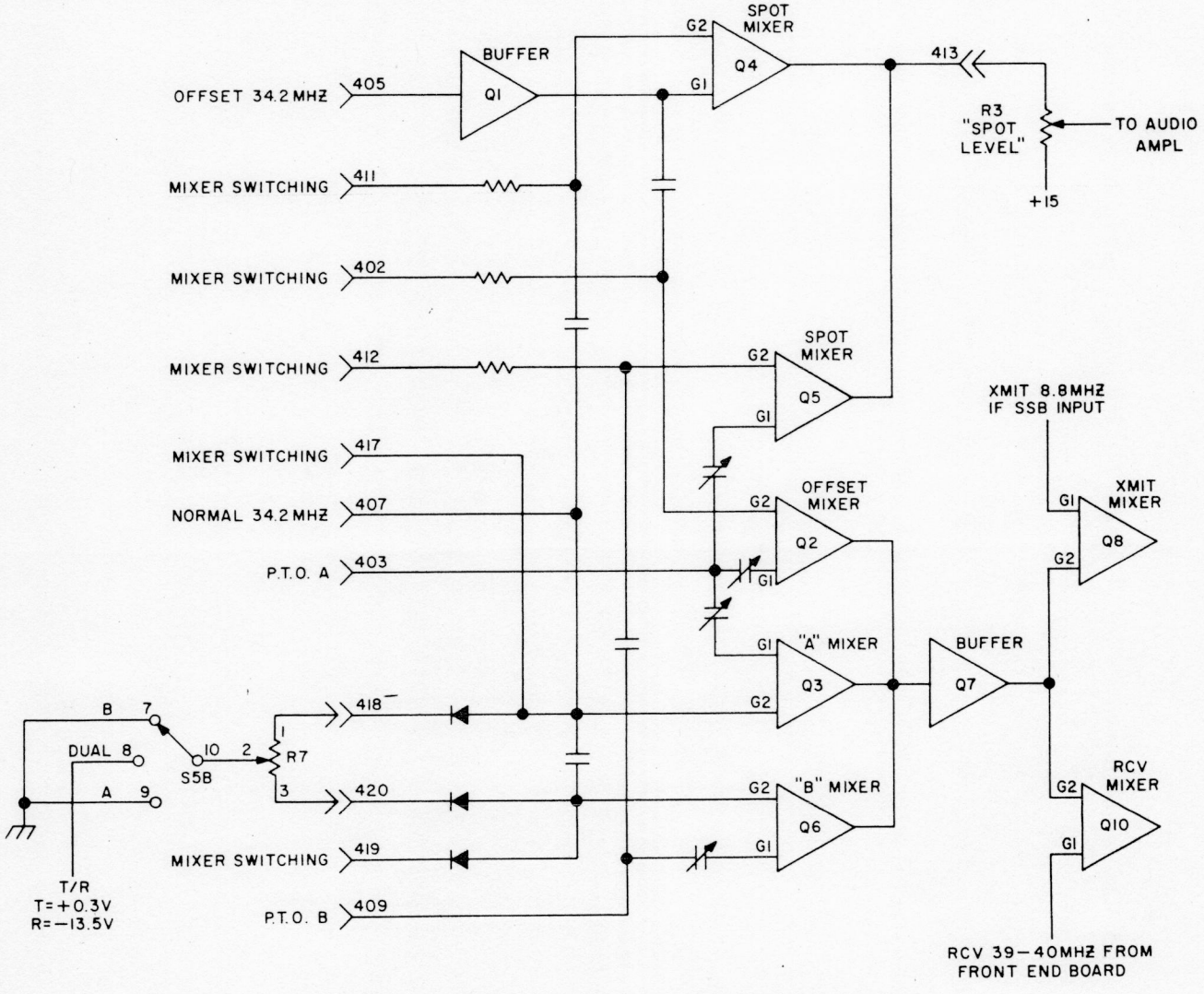

Figure 3-23. VFO Mixer Simplified Schematic Diagram

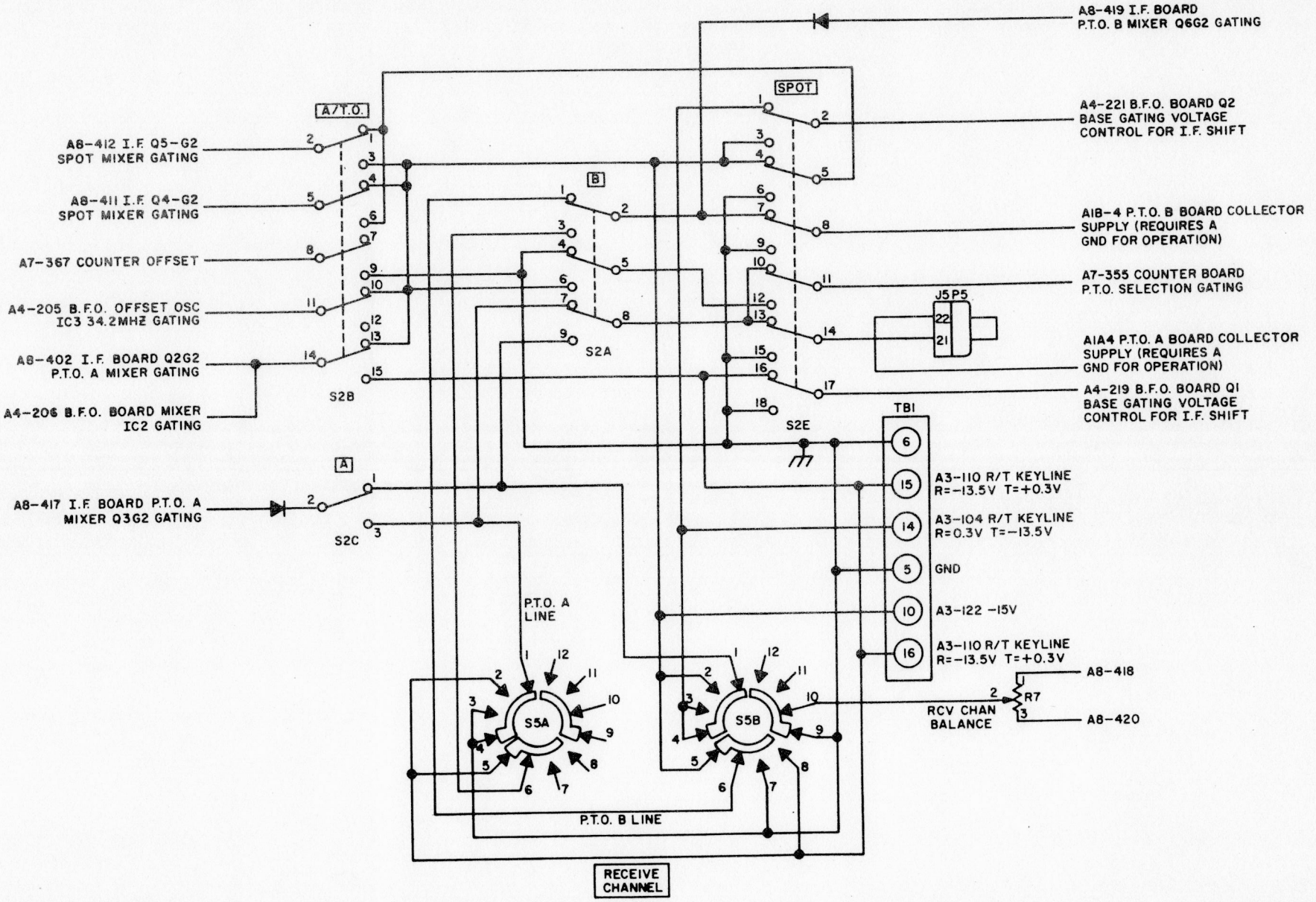

Figure 3-24. VFO Control Switching Simplified Schematic Diagram

SWITCH STATUS						COMMAND RECEIVED						
ITEM NO.	RECEIVE CHANNEL (S5)	TRANSMIT–VFO A (S2C)	TRANSMIT–VFO B (S2A)	TRANSMIT–VFO A/T.O. (S2B)	SPOT (S2E)	OFFSET MIXER (Q2)	B MIXER (Q6)	B PTO (PIN 4)	A MIXER (Q3)	A PTO (PIN 4)	A/B MIXER (Q5)	34.2 MHz MIXER (Q4)
1	A	OUT	OUT	OUT	OUT	-15V	-15V	-15V	R/T	GRD	-15V	-15V
2	A	IN	OUT	OUT	OUT	-15V	-15V	-15V	GRD	GRD	-15V	-15V
3	A	OUT	IN	OUT	OUT	-15V	T/R	T/R	R/T	R/T	-15V	-15V
4	A	OUT	OUT	IN	OUT	T/R	-15V	-15V	R/T	GRD	-15V	-15V
5	A	OUT	OUT	OUT	IN	-15V	-15V	GRD	R/T	GRD	GRD	-15V
6	A	IN	OUT	OUT	IN	-15V	-15V	GRD	GRD	GRD	GRD	-15V
7	A	OUT	IN	OUT	IN	-15V	T/R	GRD	R/T	GRD	GRD	-15V
8	A	OUT	OUT	IN	IN	T/R	-15V	GRD	R/T	GRD	-15V	GRD
9	DUAL	OUT	OUT	OUT	OUT	-15V	R/T	R/T	R/T	GRD	-15V	-15V
10	DUAL	IN	OUT	OUT	OUT	-15V	R/T	R/T	R/T	R/T	-15V	-15V
11	DUAL	OUT	IN	OUT	OUT	-15V	GRD	GRD	R/T	R/T	-15V	-15V
12	DUAL	OUT	OUT	IN	OUT	T/R	R/T	R/T	R/T	GRD	-15V	-15V
13	DUAL	OUT	OUT	OUT	IN	-15V	R/T	GRD	R/T	GRD	GRD	-15V
14	DUAL	IN	OUT	OUT	IN	-15V	R/T	GRD	GRD	GRD	GRD	-15V
15	DUAL	OUT	IN	OUT	IN	-15V	GRD	GRD	R/T	GRD	GRD	-15V
16	DUAL	OUT	OUT	IN	IN	T/R	R/T	GRD	R/T	GRD	-15V	GRD
17	B	OUT	OUT	OUT	OUT	-15V	R/T	R/T	-15V	T/R	-15V	-15V
18	B	IN	OUT	OUT	OUT	-15V	R/T	R/T	T/R	T/R	-15V	-15V
19	B	OUT	IN	OUT	OUT	-15V	GRD	GRD	-15V	-15V	-15V	-15V
20	B	OUT	OUT	IN	OUT	T/R	R/T	R/T	-15V	T/R	-15V	-15V
21	B	OUT	OUT	OUT	IN	-15V	R/T	GRD	-15V	GRD	GRD	-15V
22	B	IN	OUT	OUT	IN	-15V	T/R	GRD	T/R	GRD	GRD	-15V
23	B	OUT	IN	OUT	IN	-15V	GRD	GRD	-15V	GRD	GRD	-15V
24	B	OUT	OUT	IN	IN	T/R	R/T	GRD	-15V	GRD	-15V	GRD

R/T = +0.3 VDC in RECEIVE and -13.5 VDC in TRANSMIT

T/R = +0.3 VDC in TRANSMIT and -13.5 VDC in RECEIVE

Table 3-1. VFO Biasing

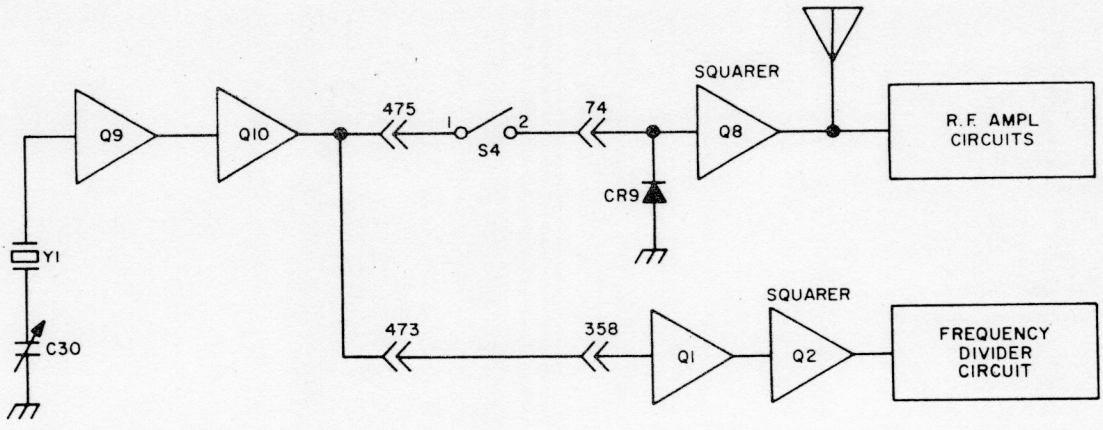

Figure 3-25. 100 kHz Oscillator Simplified Schematic Diagram

3.4.5 Actual Frequency Conversion

The previous paragraphs used approximate frequencies for explanation purposes. The exact oscillator and mixing frequencies to produce a USB transmit frequency of 7.2500 MHz is as follows:

43.1000	calibrator oscillator
- 8.8165	USB crystal oscillator
34.2835	IF board mixer IC output
- 3.3500	PTO module output
30.9335	IF board 30.1 to 31.1 mixer output
+ 8.8165	USB crystal oscillator
39.7500	IF board 39 to 40 mixer output
47.0000	Front End board local oscillator
-39.7500	IF board 39 to 40 mixer output
7.2500	Front End board mixer IC1 output (final transmit frequency in MHz)

3.5 100 kHz OSCILLATOR

The 100 kHz oscillator is located on the AGC Detector board. It is a continuous running master clock source for the frequency counter circuits. It also provides a 100 kHz frequency marker for receiver calibration purposes. A simplified block and signal path diagram for the 100 kHz oscillator is shown in Figure 3-25.

The 100 kHz oscillator is comprised of field effect transistor Q9 and 100 kHz crystal Y1. Capacitor C30 is adjusted to compensate for circuit tolerances permitting the oscillator frequency to be set to exactly 100,000 Hz. This is achieved by zero beating the 150th harmonic against WWV at 15 MHz. The output of transistor Q9 is routed through buffer amplifier transistor Q10 to AGC Detector board output pins 475 and 473. The RF signal level at each output pin is approximately 4 to 7 VPP. The 100 kHz signal from AGC Detector board output pin 475 is routed through the energized front panel "PULL TO CALIBRATE" switch S4 contacts 1 and 2 to the Front End board input pin 74. The 100 kHz signal is then shaped by the squaring amplifier comprised of diode CR9 and transistor Q8 in order to improve the harmonic output at 30 MHz. The output of transistor Q8 is applied to the receiver front end circuit.

The 100 kHz signal from AGC Detector board output pin 473 is routed to the Counter board input pin 358, and then routed through emitter follower transistor Q1 and level converter transistor Q2 to the input of the frequency divider circuits.

3.6 COUNTER

The basic concept of the frequency counter circuit employed by the Model CX7 is shown in Figure 3-26. To obtain a "RESET" and "READ" command signal, the master clock input signal is reduced in frequency by the clock divider chain. The "RESET" command signal instructs the RF counter chain when to start and when to stop processing the RF input countdown. The "READ" command signal instructs the input count gate when to pass and not to pass the RF input to the RF counter chain. The "READ" command also causes the read gate to turn-on or to turn-off the Nixie display tubes. The code converter circuit transposes the logic output of the RF counter chain into driving voltages that cause the appropriate numeral of each Nixie tube to illuminate.

The operating sequence of events for the frequency counter circuit is as follows:

a. The momentary reset pulse clears the RF counter chain outputs (causes the output states to return to the starting count of zero.)

b. The read command turns off the Nixie tubes for the duration of the read-in period and also enables the input count gate to pass the RF input to the RF counter.

c. The RF counter chain processes the RF input frequency countdown.

d. After a specific period of time, the read command switches to the read-out potential. The operation of the input count gate is inhibited. With no more inputs being applied to the RF counter chain, the last count produced by each divider circuit (in the RF counter chain) is retained. Their output states are, in-effect, a form of data storage.

e. When the read command switched to the read-out potential it also caused the read gate to turn-on the Nixie tubes. The converted output states of the RF counter chain is displayed for the duration of the read-out potential.

f. The reset pulse reoccurs causing a recycling of the events discussed in paragraph 3.6 a. through e.

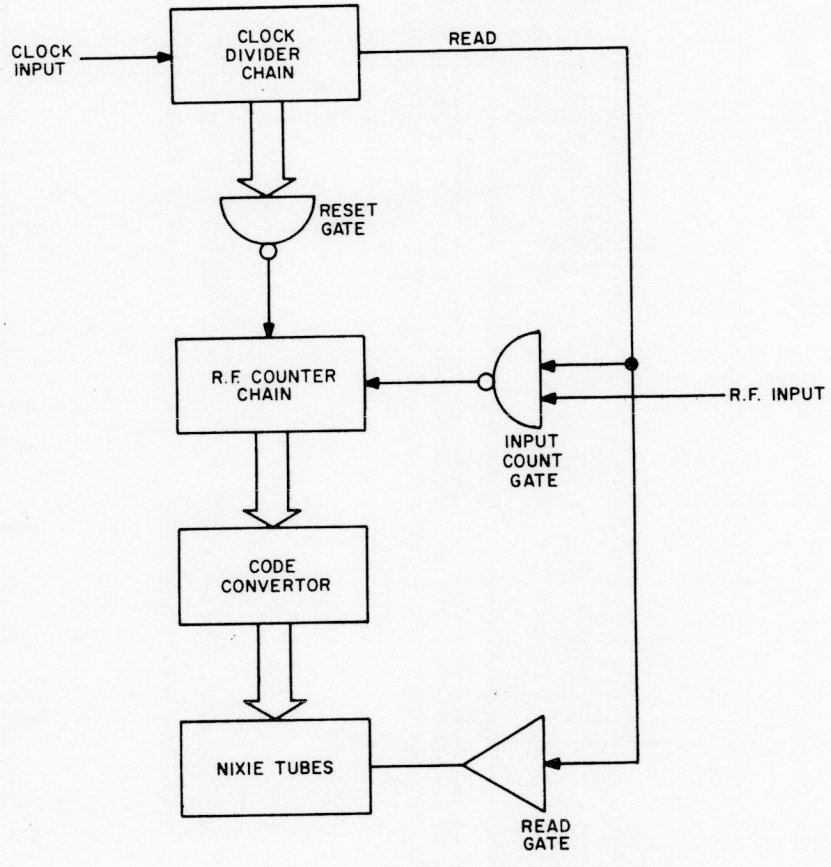

Figure 3-26. Simplified RF Counter Block Diagram

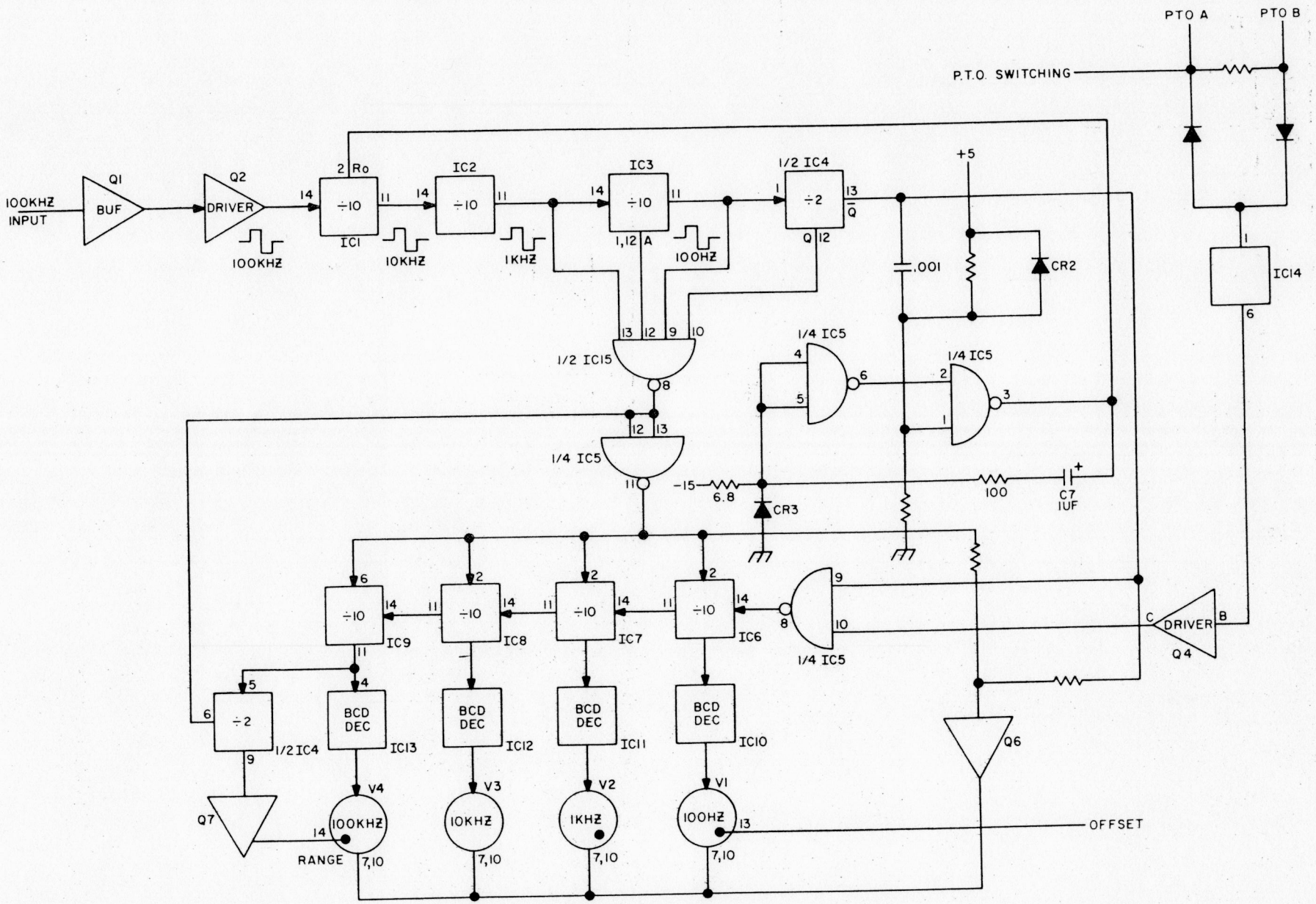

Figure 3-27. RF Counter Logic Block Diagram

Switch Position			PTO Switching Potential	PTO To Be Counted	
"B" (S2A)	"SPOT" (S2E)	RCV CHAN (S5)		In RCV	In XMIT
OUT	OUT	A	GRD	A	A
OUT	OUT	B	*T/R	B	A
OUT	OUT	DUAL	GRD	A	A
IN	OUT	A	GRD	A	A
IN	OUT	B	*T/R	B	A
IN	OUT	DUAL	GRD	A	A
OUT	IN	N/A	GRD	A	A
IN	IN	N/A	-15V	B	B

*T/R = +0.3 VDC in Receive
-13.5 VDC in Transmit

Table 3-2. PTO Switching Potential

Voltage				Count Equivalent
"A" Pin 12	"B" Pin 9	"C" Pin 8	"D" Pin 11	
0 VDC	0 VDC	0 VDC	0 VDC	0
+5 VDC	0 VDC	0 VDC	0 VDC	1
0 VDC	+5 VDC	0 VDC	0 VDC	2
+5 VDC	+5 VDC	0 VDC	0 VDC	3
0 VDC	0 VDC	+5 VDC	0 VDC	4
+5 VDC	0 VDC	+5 VDC	0 VDC	5
0 VDC	+5 VDC	+5 VDC	0 VDC	6
+5 VDC	+5 VDC	+5 VDC	0 VDC	7
0 VDC	0 VDC	0 VDC	+5 VDC	8
+5 VDC	0 VDC	0 VDC	+5 VDC	9

Table 3-3. BCD Count

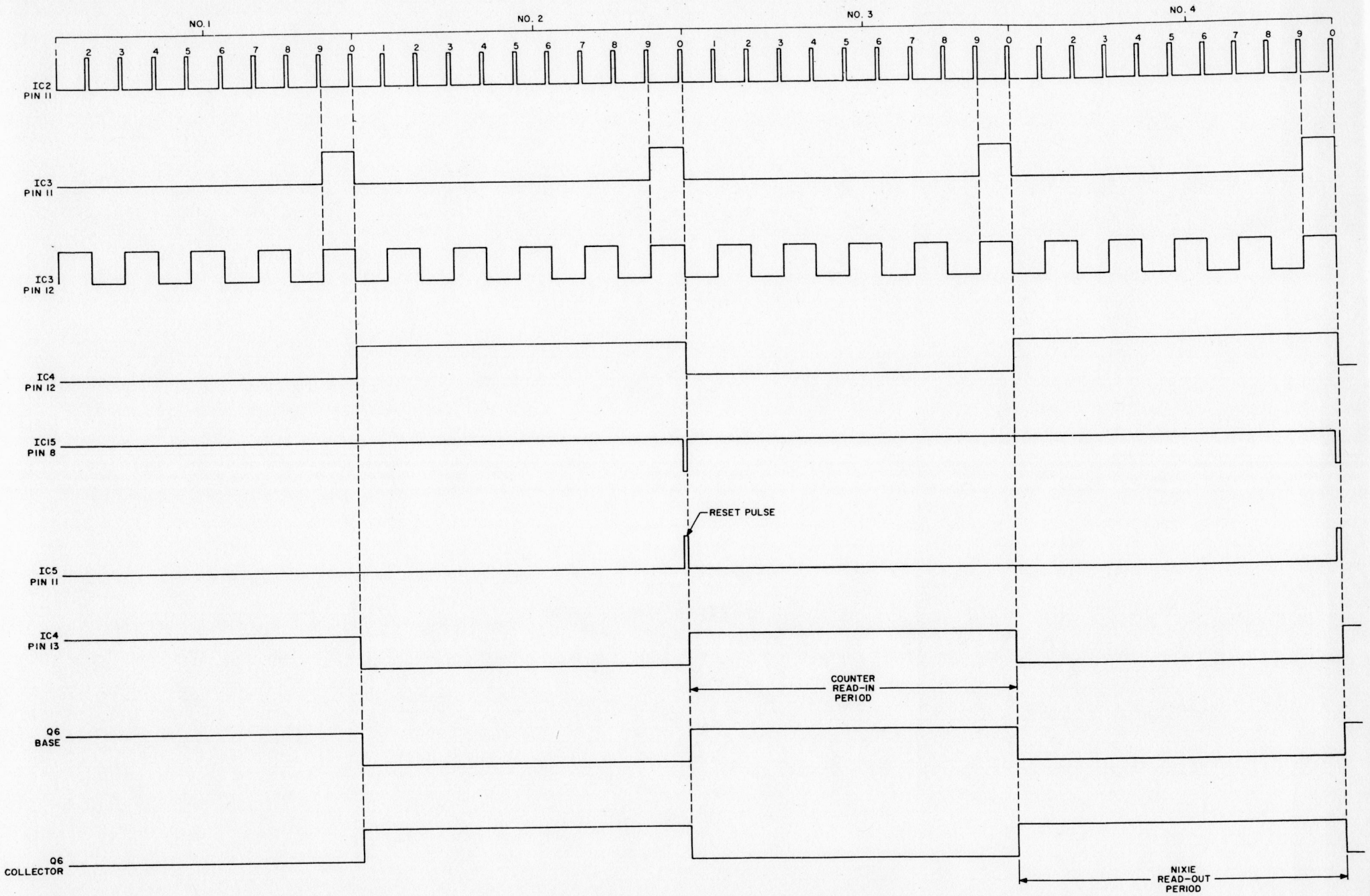

Figure 3-28. RF Counter Timing Block Diagram

The previous sequence of events occurs at a rate faster than the human eye can follow. Only the frequency display of the Nixie tubes is perceived.

A logic diagram of the actual Model CX7 frequency counter circuit is shown in Figure 3-27. The timing diagram shown in Figure 3-28 depicts the sequence of output events of the integrated circuits from which the reset, read-in, and read-out commands are derived.

The frequency from the 100 kHz standard on the AGC Detector board is routed through buffer transistor Q1 and driver transistor Q2. Transistor Q2 converts the transistor signal voltage level to integrated circuit voltage level. Integrated circuit IC1 divides the 100 kHz by a factor of ten. Integrated circuits IC2 and IC3 also function as divided by ten circuits producing outputs of 1 kHz and 100 Hz respectively. Integrated circuit IC4 divides the 100 kHz by a factor of two. The $\overline{Q}$ output of integrated circuit IC4 pin 13 provides the "READ" command signal to integrated circuit IC5 pin 9 and transistor Q6. The "READ" command consists of two potentials, which are, +3 to +5 VDC and a ground. The +3 to +5 VDC potential is referred to as the "READ-IN" command and the ground potential is referred to as the "READ-OUT" potential. When the read-in potential is applied to input count gate integrated circuit IC5 pin 9, any RF inputs that are applied to IC5 pin 10 will be inverted by IC5 and applied to integrated circuit IC6 pin 14. The read-in potential also forward biases transistor Q6, causing it to supply a ground that is used to lower the anode voltage of the Nixie tubes below the firing potential. Consequently, the Nixie tubes do not illuminate during the read-in potential. When the read-in potential switches to the read-out potential, the ground applied to integrated circuit IC5 pin 9 drives the output at IC5 pin 8 to a constant +5 VDC for the duration of the read-out potential (regardless of the potential of the RF input being applied to IC5 pin 10). During the read-out potential, transistor Q6 is reverse biased which permits the normal B+ potential to be applied to the Nixie tube anodes. Integrated circuit IC5 pin 3 is AC coupled to IC5 pins 4 and 5 permitting the two NAND gates to be utilized as a self-completing trigger circuit. The function of the trigger circuit is to provide a pulse that assists in ensuring the constant width of the reset pulse. The trigger pulse is a +3 to +5 VDC pulse occurring just prior to the read-in period and at all other times the IC5 pin 3 output is at ground potential. The reset pulse is originated when integrated circuit IC2 pin 11, IC3 pins 12 and 11 and IC4 pin 12 outputs are all within a +3 to +5 VDC potential which in turn causes the output of IC15 pin 8 to switch to a ground potential. The ground potential is inverted by integrated circuit IC5 to produce the actual reset pulse and is routed from IC5 pin 11 to each divide-by-ten circuit in the RF counter chain. The noninverted (ground) potential is used to clear the overrange divide-by-two flip-flop integrated circuit IC4.

The RF output from pin 3 of each PTO module is routed directly to the Counter board. PTO A is connected to Counter board input pin 354 and PTO B is connected to Counter board input pin 352. Each PTO RF output is applied to linear amplifier integrated circuit IC14 through the applicable steering diode CR5 or CR6. The diodes are biased so that only one PTO frequency can be applied to IC14 at any one time. The diode biasing a dependent upon the setting of the "TRANSMIT VFO-B" switch S2A, "SPOT" switch S2E and sometimes the "RECEIVE CHANNEL" switch S5A and S5B. The diode biasing (PTO switching potential) is either a ground, 0 VDC or -15 VDC. Table 3-2 lists which PTO switching potential is present for the different combinations of switch positions.

The PTO signal is amplified by integrated circuit IC14 and then applied to the base of waveshaper transistor Q4. The output of transistor Q4 is applied to integrated circuit IC5 input pin 10. The signal is permitted to pass through integrated circuit IC5 to integrated circuit IC6 input pin 14 whenever the positive read-in command is applied to integrated circuit IC5 input pin 9.

Each integrated circuit (IC6 through IC9) function as a divide-by-ten countdown divider. They function identically as the 50 Hz countdown chain except more of the outputs are used. For example, integrated circuit IC6 not only provides a divide-by-ten output to integrated circuit IC6 but also four outputs to integrated circuit IC10. The four outputs comprise what is referred to as a binary coded decimal (BCD) output. The voltage potential of the four outputs is a combination of zero or +5 VDC levels that form a code representative of the count (0 through 9) taking place in integrated circuit IC6 at any specific time. The actual voltage code and count equivalent is listed in table 3-3.

Integrated circuits IC10 through IC13 each perform an identical function. They are referred to as BCD to decimal decoders and each provides a ground to the applicable digit (0 through 9) of the Nixie tube.

3.7 POWER SUPPLY

The DC operating voltages for the Model CX7 are generated by the power supply circuits comprised of the Power Supply printed circuit board and miscellaneous electrical parts mounted on the CX7 chassis. A block diagram of the power supply circuit is shown in Figure 3-29.

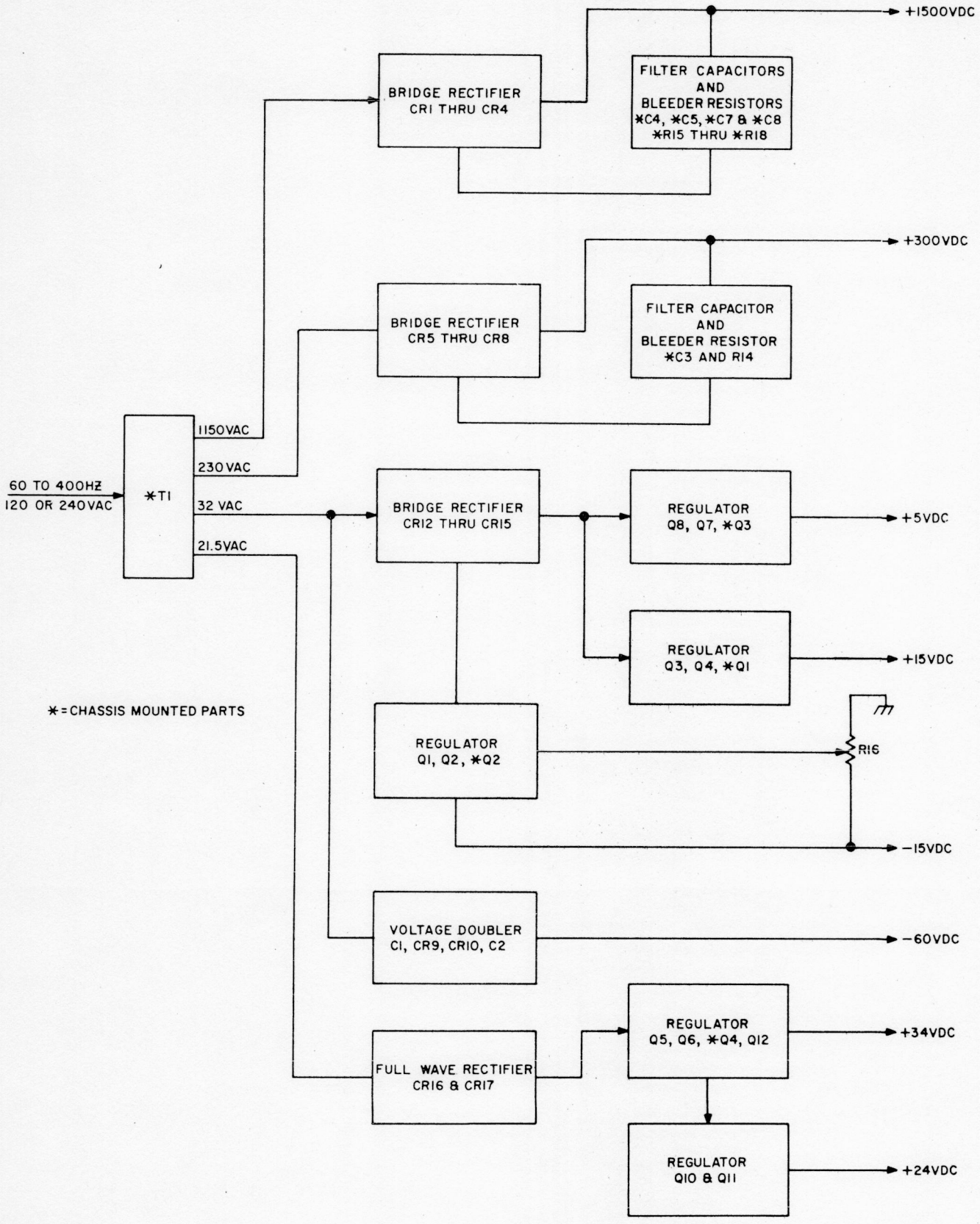

Figure 3-29. Power Supply Block Diagram

Primary power in the frequency range of 50 to 400 Hertz is routed from rear panel connector J6 pins 7 and 4, through a 5-ampere slo-blow fuse F1, thermistor RT1 and the energized "AC" switch to the primary windings of transformer T1. Strapping options for 120 or 240 VAC primary input voltage are provided at Power Supply printed circuit board input pins 163, 164, 165, and 166. The two T1 primary windings 1 to 2 and 3 to 4 are connected in parallel for 120 VAC operation or are connected in series for 240 VAC operation.

+1500 VDC Supply

The secondary windings 5 to 6 and 7 to 8 of transformer T1 are connected in series to provide a 1150 VAC input for the bridge rectifier comprised of diodes CR1 through CR4. The rectified output is filtered by capacitors C4, C5, C7, and C8. The output of the +1500 VDC supply is utilized by the plate of the power amplifier tube. The return lead of the supply is isolated from ground by resistors R1 and R40 to facilitate current sensing for the "PLATE" meter function.

+300 VDC Supply

The secondary winding 9 to 10 of transformer T1 provides a 230 VAC input for the bridge rectifier comprised of diodes CR5 through CR8. The rectified output is filtered by capacitor C3. The +300 VDC output is utilized by the screen of the power amplifier tube and the plate of the Counter board Nixie tubes. The return lead of the supply is isolated from ground by resistor R6 to facilitate current sensing for the "SCREEN" meter function.

-60 VDC Supply

The secondary winding 17 to 18 of transformer T1 provides a 30 VAC input to the voltage doubler comprised of capacitors C1 and C2 and diodes CR9 and CR10. The -60 VDC output of the voltage doubler is utilized by the control grid of the power amplifier tube.

+15, -15, and +5 VDC Supply

A simplified schematic of the +15, -15 and +5 VDC supply is shown in Figure 3-30. The secondary windings 15 to 16 and 17 to 18 of transformer T1 each provide 30 VAC to the bridge rectifier comprised of diodes CR12 through CR15. The positive output of the bridge is filtered by capacitor C9 and routed to the +5 and +15 VDC series regulators. The negative output of the bridge is routed to the -15 VDC series regulator. The circuit configuration permits referencing all of series regulators to the -15 VDC supply. The output of -15 VDC supply is adjusted by the setting of variable resistor R16. Each series regulator operates in the same manner: Two transistors are connected in a Darlington configuration, for added current-carrying capacity, feeding back regulation information to a control driver transistor.

+34 and +24 VDC Supply

A simplified schematic of the +34 and +24 VDC supply is shown in Figure 3-31. The secondary winding 11 to 12 and 13 to 14 of transformer T1 each provide 37 VAC to the full wave rectifier comprised of diodes CR16 and CR17. The output of the full wave rectifier is filtered by capacitor C2 and routed to the +34 VDC series regulator. The +34 VDC regulator operates in a similar manner as the series regulator previously described, with the exception of transistor Q12. The +34 VDC regulated output at the emitter of transistor Q4 is routed through one ohm resistor R41 to the +34 VDC distribution point. If the +34 VDC regulated output shorts to ground, transistor Q12 becomes forward biased which in turn reverse biases transistor Q5, resulting in interruption of the +34 VDC output.

Darlington connected transistors Q10 and Q11 further regulate the +34 VDC to +24 VDC.

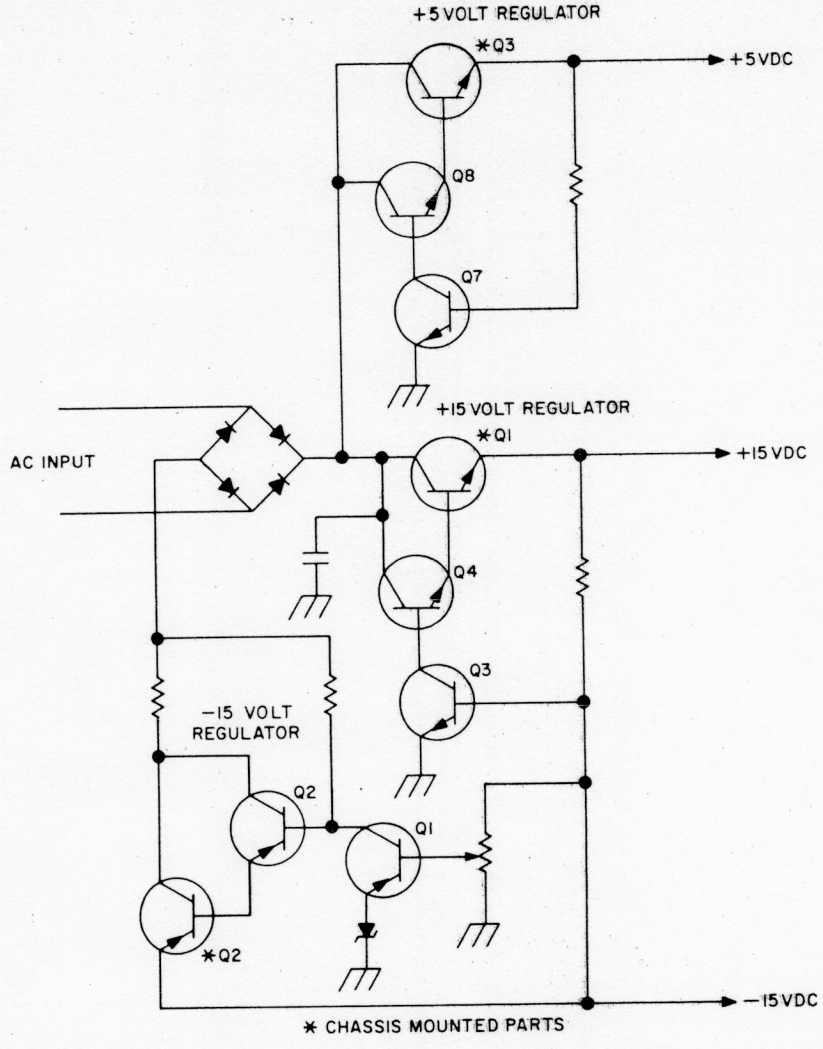

Figure 3-30. +15, -15 and +5 VDC Voltage Regulator Simplified Schematic Diagram

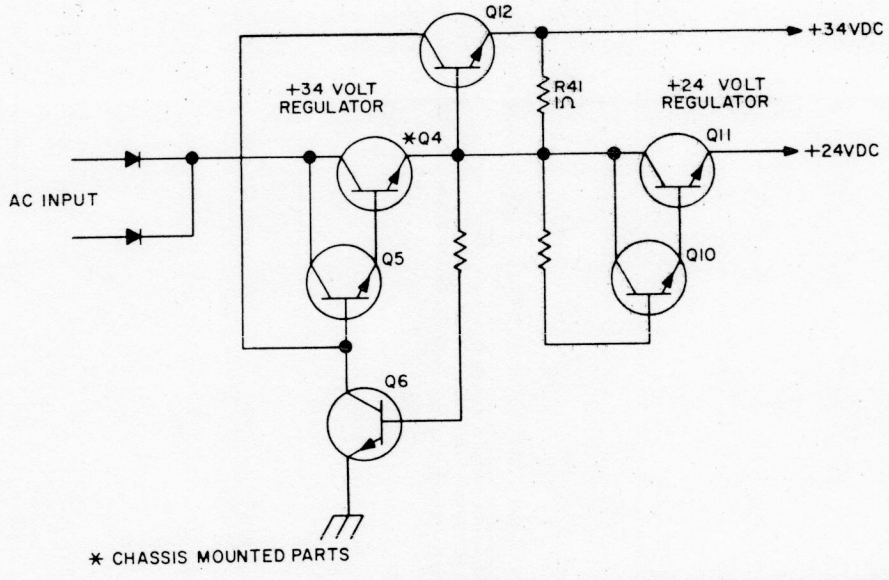

Figure 3-31. +34 and +24 VDC Voltage Regulator Simplified Schematic Diagram

SECTION IV

MAINTENANCE

4.1 INTRODUCTION

This section contains information for use in preventive or corrective maintenance, troubleshooting, component replacement and troubleshooting aids.

4.2 PREVENTIVE MAINTENANCE

4.2.1 General

Preventive maintenance consists of cleaning, visual inspection, lubrication, etc. Preventive maintenance performed on a regular basis may prevent breakdown and improve reliability. The Model CX7 should be cleaned as often as operating conditions require. Accumulation of dirt in the instrument can cause overheating and component breakdown. Dirt on components acts as an insulating blanket and prevents efficient heat dissipation. It also provides an electrical conduction path.

CAUTION

Avoid the use of chemical cleaning agents which might damage the plastics used in this instrument. Avoid chemicals which contain benzene, toluene, xylene, acetone, or similar solvents.

4.2.2 Cover Removal

Remove the seven Phillips-head screws located on the rear of the cover. Remove the two rear feet and the ten Phillips-head screws located on the bottom of the cover. From the rear, push the chassis slowly forward until the front panel protrudes from the cover about an inch. Grasp the front panel at the edges and carefully pull the chassis out of the cover.

4.2.3 Cleaning

a. Exterior. Loose dust accumulated on the outside of the Model CX7 can be removed with a soft cloth or small paint brush. The paint brush is particularly useful for dislodging dirt on and around the front panel controls. Dirt which remains can be removed with a soft cloth dampened in a mild detergent and water solution. Abrasive cleaners should not be used.

b. Interior. Dust in the interior of the transceiver should be removed occasionally due to its electrical conductivity under high humidity conditions. The best way to clean the interior is to blow off the accumulated dust with dry, low-velocity air. Remove any dirt which remains with a soft paint brush or a cloth dampened with alcohol of chlorothene-nu. A cotton-tipped applicator is useful for cleaning in narrow spaces and circuit boards.

The high voltage circuits, particularly parts located in the PA Assembly, should receive special attention. Excessive dirt in these areas may cause high-voltage arcing and result in improper operation.

4.2.4 Lubrication

a. Switches and Potentiometers. The reliability of potentiometers, rotary switches and other moving parts can be maintained if they are kept properly lubricated. Use a cleaning-type lubricant on switch contacts. Lubricate switch detents with a heavier grease. Potentiometers which are not permanently sealed should be lubricated with a lubricant which does not affect electrical characteristics. The pot lubricant can also be used on shaft bushings. Do not overlubricate.

4.2.5 Visual Inspection

The Model CX7 should be inspected occasionally for such defects as broken connections, damaged circuit boards, and heat-damaged parts.

The corrective procedure for most visible defects is obvious; however, particular care must be taken if heat-damaged components are found. Overheating usually indicates other trouble in the transceiver; therefore, it is important that the cause of overheating be corrected to prevent recurrence of the damage.

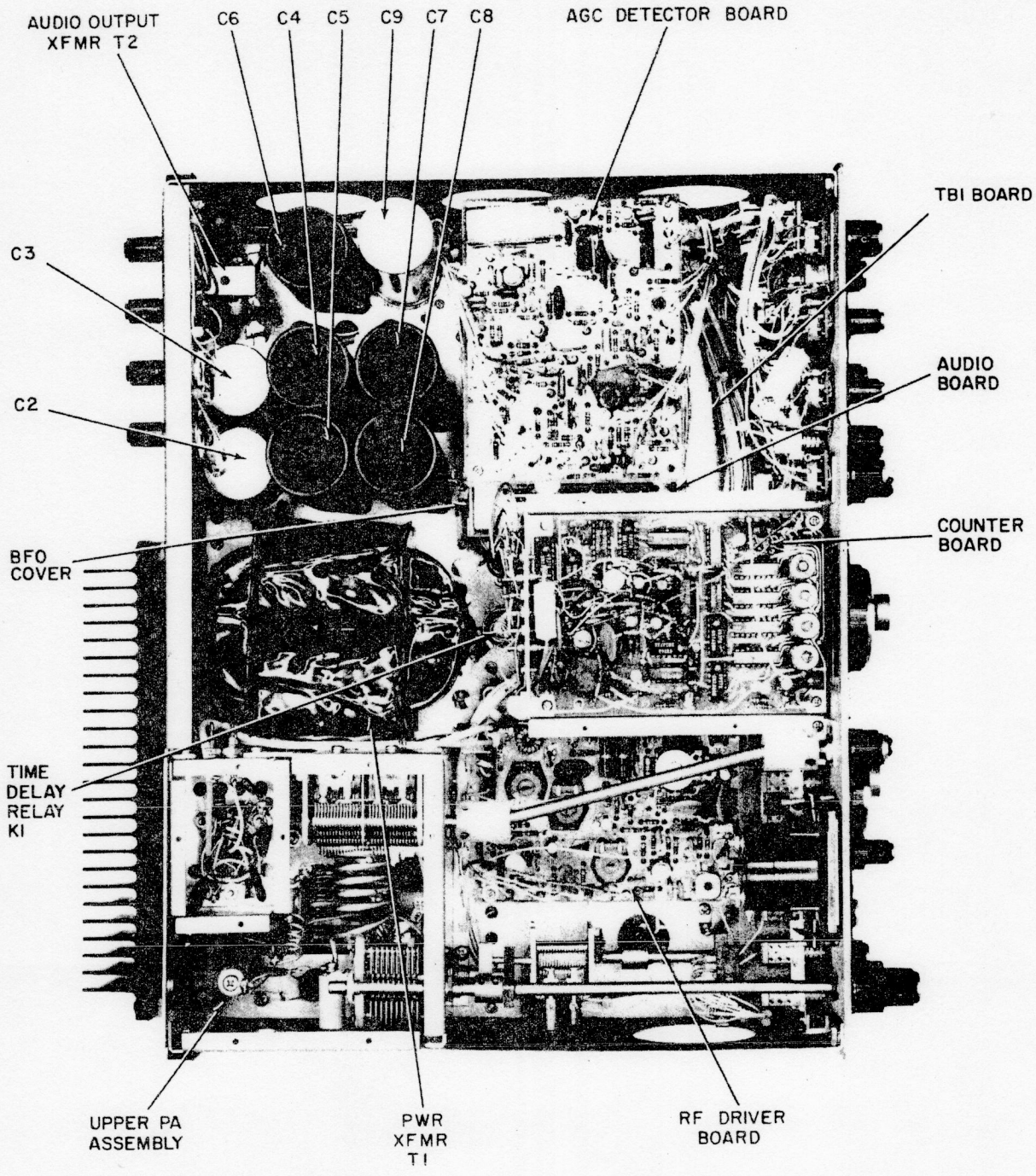

Figure 4-1. Model CX7 Top View (Sheet 1 of 2)

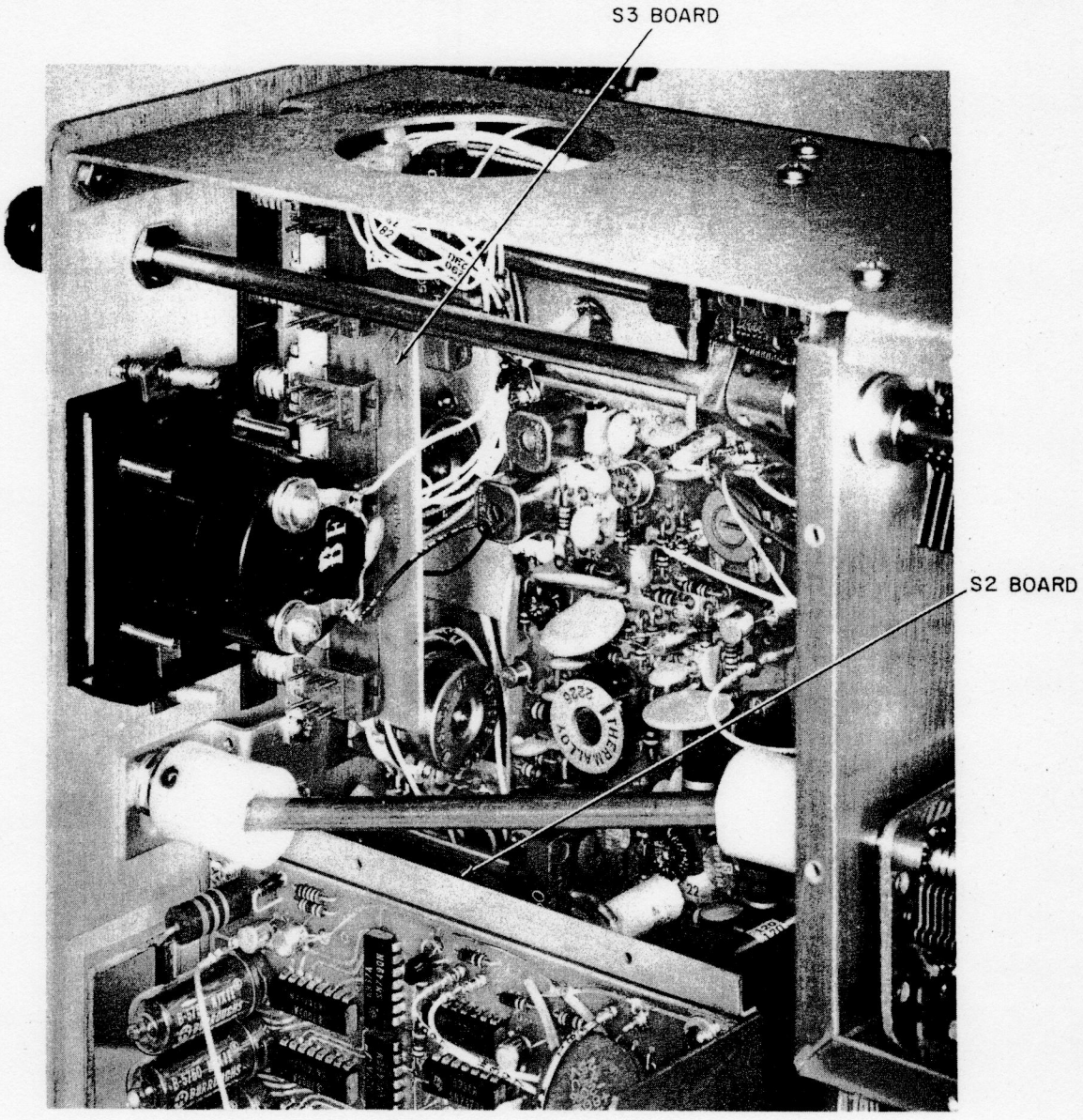

Figure 4-1. Model CX7 Top View (Sheet 2 of 2)

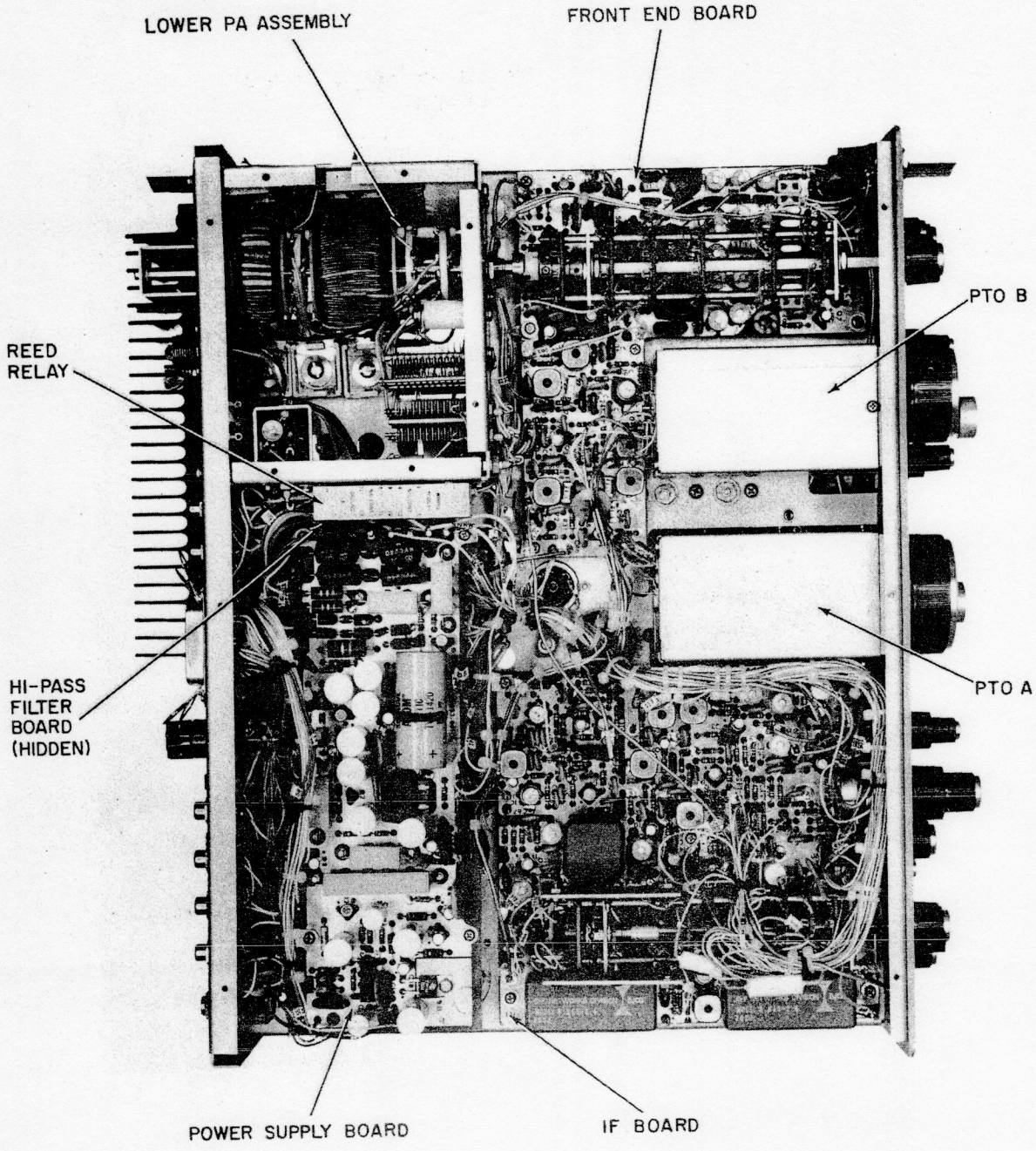

Figure 4-2. Model CX7 Bottom View

4.3 TROUBLESHOOTING

4.3.1 General

The information in the following paragraphs is provided to facilitate troubleshooting and should be used in conjunction along with other sections of this manual in locating a suspected defect.

4.3.2 Troubleshooting Techniques

This troubleshooting procedure is arranged in an order which checks the simple possibilities before proceeding with extensive troubleshooting. The first few checks assure proper operation and connection. If the trouble is not located by these checks, the remaining steps aid in locating the defective component. When the defective component is located, it should be replaced following the replacement procedures given under Corrective Maintenance.

a. Check Switch and Control Settings. Incorrect settings can indicate a trouble that does not exist. If there is any question about the correct function or operation of any control, see the Operating Instructions section of this manual.

b. Check Associated Equipment. Before proceeding with troubleshooting, check that the equipment used with this transceiver is operating correctly. Check that the interconnecting cables are not defective. Also, check the power source.

c. Isolate Trouble. Investigate the extent of the symptoms by monitoring the front panel meter and "KHZ" display while operating in different switch and control settings in various modes. Perform a visual check for damaged wires, electrical and mechanical parts, and printed circuit boards. Check for loose interconnections between printed circuit boards. First, isolate the trouble to a chassis mounted part or to the printed circuit board level and then to the circuit level using the checks given in paragraph 4.5.5. The type of pin connectors that are utilized provide a convenient means for printed circuit board isolation. For example, a short in the Power Supply board can be isolated by disconnecting the pin connectors, for that voltage, at the remaining boards.

d. Check Individual Parts. The following procedures describe methods of checking individual parts. Parts which are soldered in place are best checked by disconnecting one end. This isolates the measurement from the effects of surrounding circuitry.

1. Transistors and Integrated Circuits. The best check of operation is actual performance under operating conditions. If a part is suspected of being defective, it can best be checked by substituting a new part or one which has been checked previously. However, be sure that circuit conditions are not such that a replacement might also be damaged.

2. Diodes. A diode can be checked for an open or shorted condition by measuring the resistance between terminals. With an ohmmeter scale having an internal source of between 800 millivolts and 3 volts, the resistance should be very high in one direction and very low when the leads are reversed.

CAUTION

Do not use an ohmmeter scale that has a high internal current. High currents may damage the diode.

3. Resistors. Check the resistors with an ohmmeter. Check the Electrical Parts List for the tolerance of the resistors used in this instrument. Resistors normally do not need to be replaced unless the measured value varies widely from the specified value.

4. Inductors. Check for open inductors by checking continuity with an ohmmeter. Shorted or partially shorted inductors can usually be found by checking the waveform response when high-frequency signals are passed through the circuit. Partial shorting often reduces high frequency response (roll-off).

5. Capacitors. A leaky or shorted capacitor can best be detected by checking resistance with an ohmmeter on the highest scale. Do not exceed the voltage rating of the capacitor. The resistance reading should be high after initial charge of the capacitor. An open capacitor can best be detected with a capacitance meter or by checking whether the capacitor passes AC signals.

e. Repair and Readjust the Circuit. If any defective parts are located, follow the replacement procedures given in this section. Be sure to check the performance of any circuit that has been repaired or that has had any electrical parts replaced.

4.4 CORRECTIVE MAINTENANCE

4.4.1 General

Corrective maintenance consists of component replacement and Model CX7 repair. Special techniques required to replace components are given here.

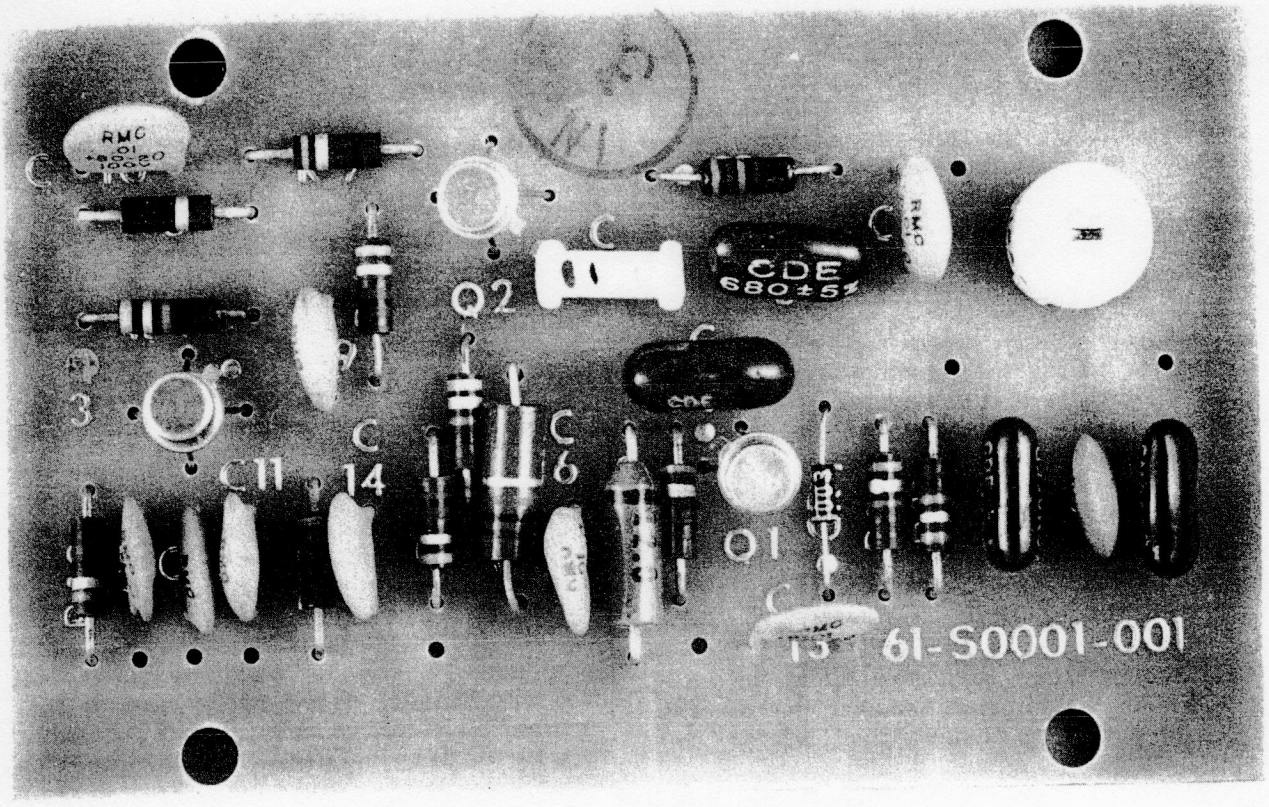

Figure 4-3. PTO Board (Sheet 1 of 2)

NOTES

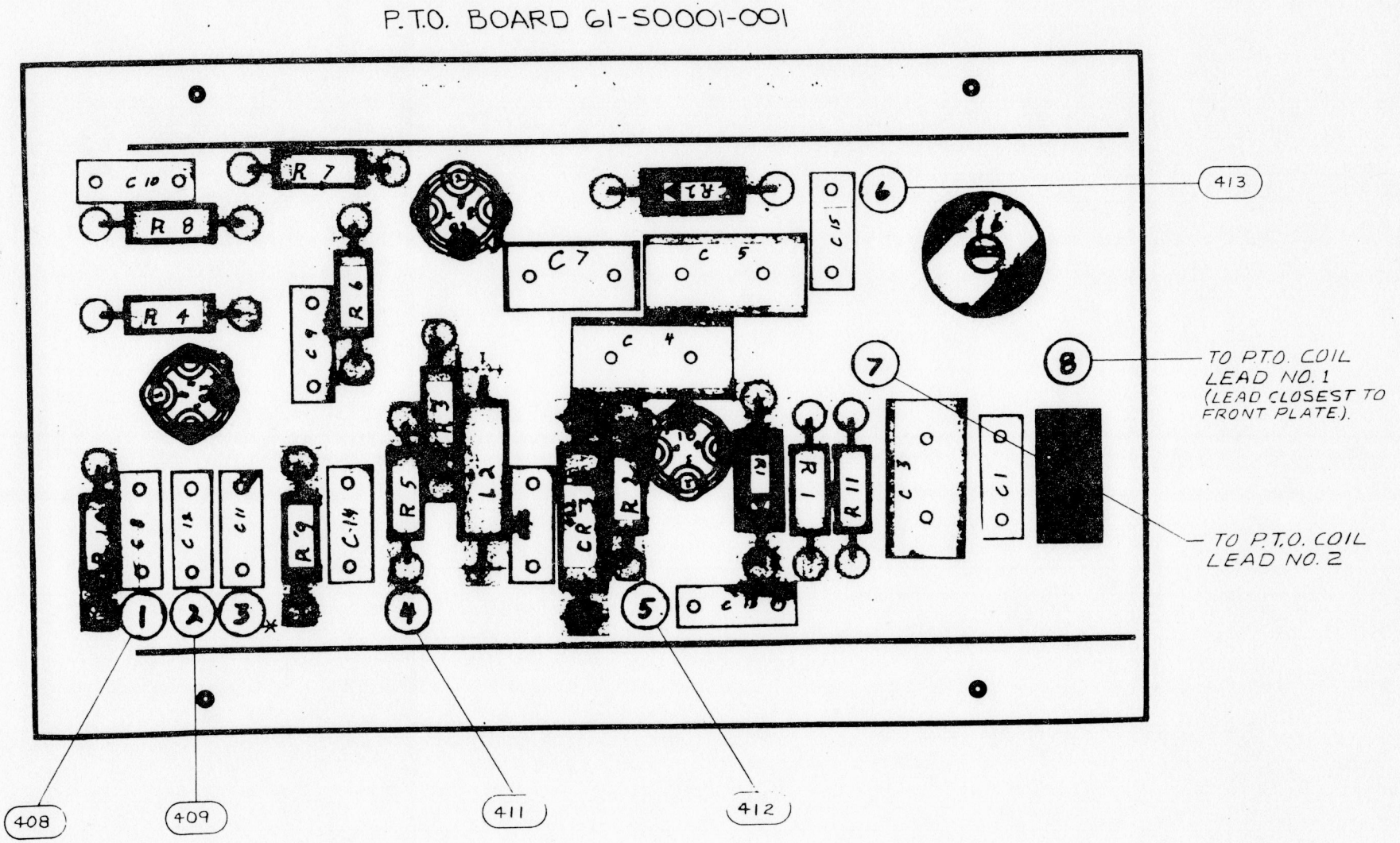

NOTES:
1. * INDICATES DELETED ITEMS.
2. ○ INDICATES WIRE NUMBERS.

Figure 4-3. PTO Board (Sheet 2 of 2)

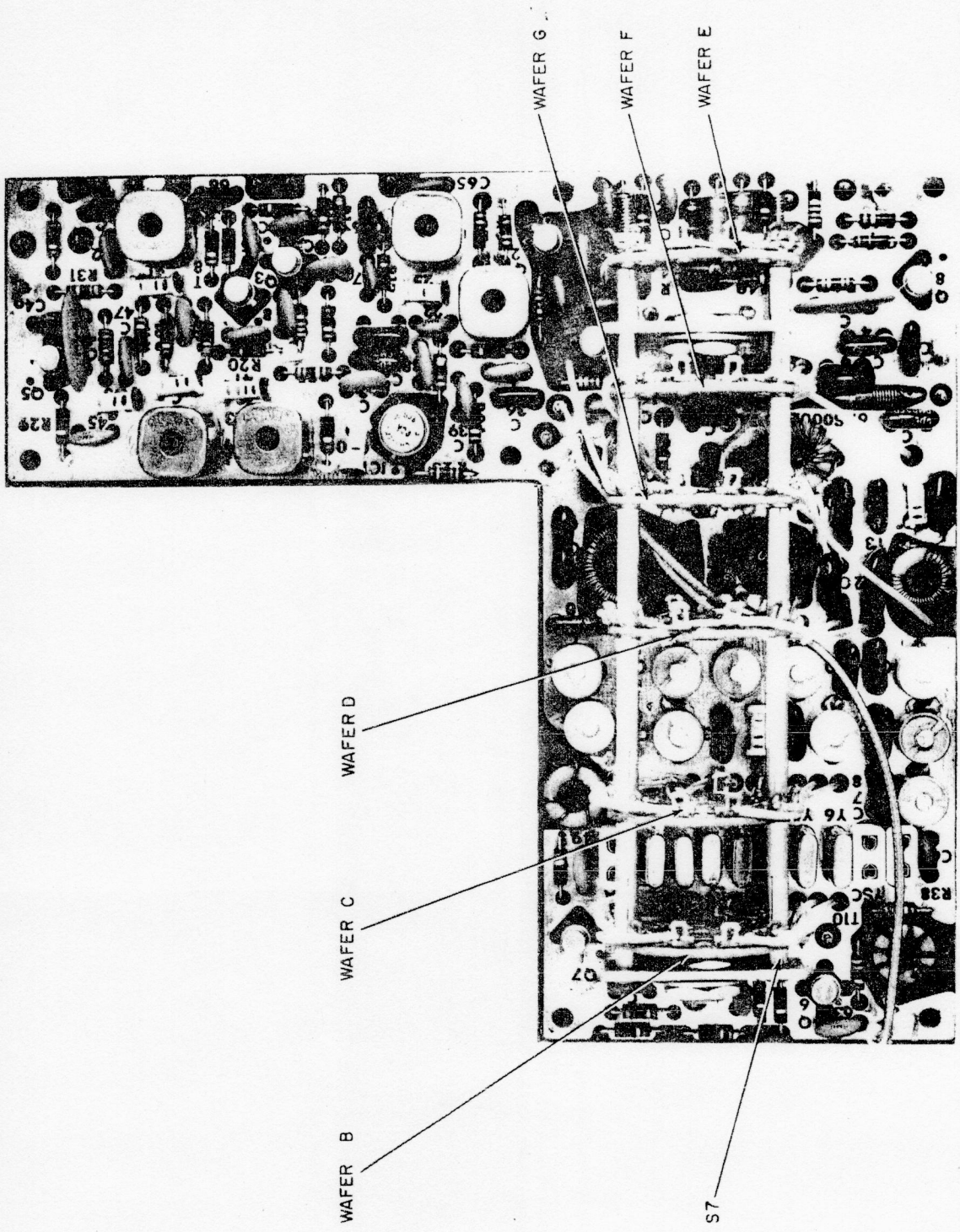

Figure 4-4. Front End Board (Sheet 1 of 2)

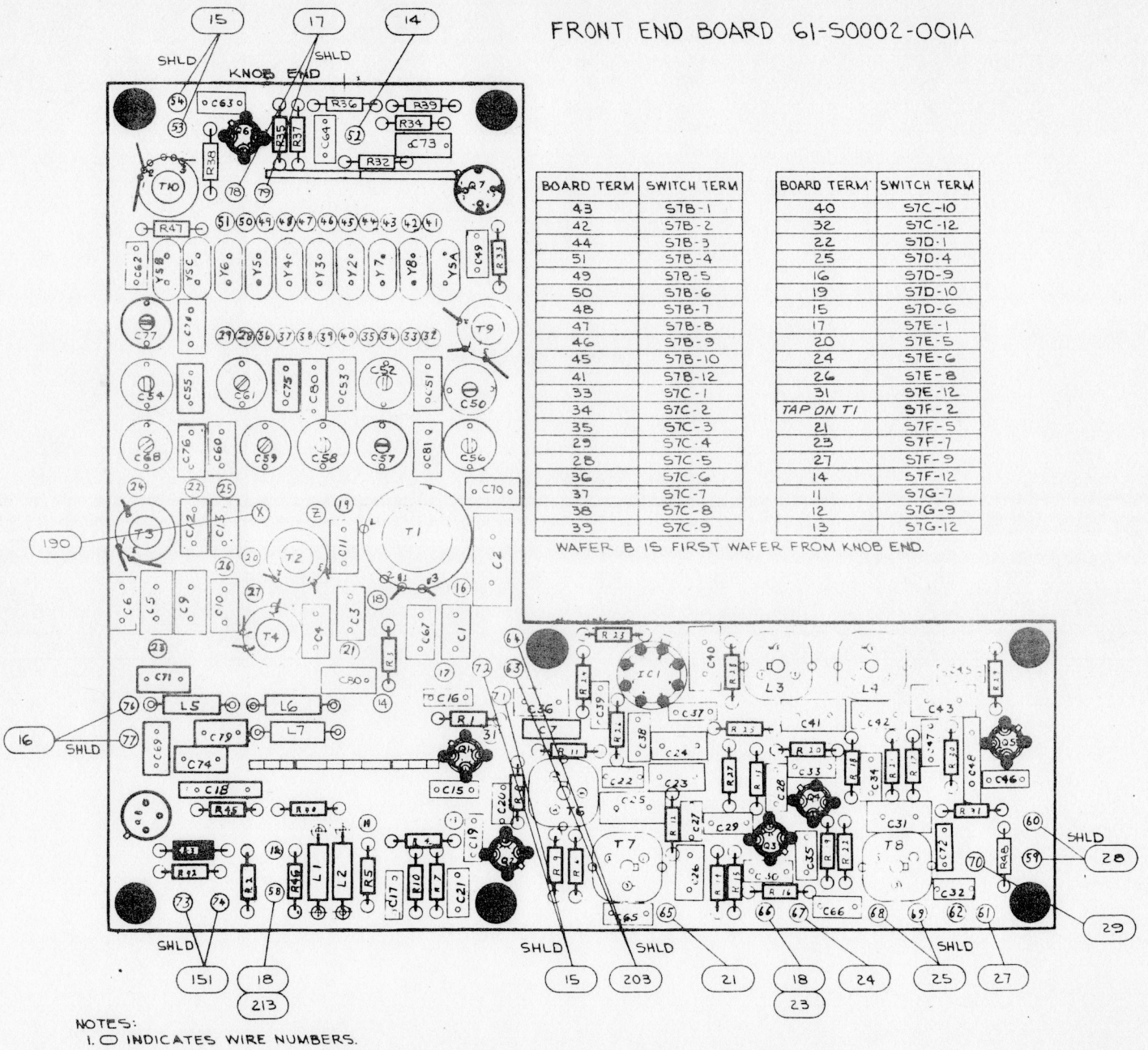

BOARD TERM	SWITCH TERM
43	S7B-1
42	S7B-2
44	S7B-3
51	S7B-4
49	S7B-5
50	S7B-6
48	S7B-7
47	S7B-8
46	S7B-9
45	S7B-10
41	S7B-12
33	S7C-1
34	S7C-2
35	S7C-3
29	S7C-4
28	S7C-5
36	S7C-6
37	S7C-7
38	S7C-8
39	S7C-9

BOARD TERM	SWITCH TERM
40	S7C-10
32	S7C-12
22	S7D-1
25	S7D-4
16	S7D-9
19	S7D-10
15	S7D-6
17	S7E-1
20	S7E-5
24	S7E-6
26	S7E-8
31	S7E-12
TAP ON T1	S7F-2
21	S7F-5
23	S7F-7
27	S7F-9
14	S7F-12
11	S7G-7
12	S7G-9
13	S7G-12

WAFER B IS FIRST WAFER FROM KNOB END.

Figure 4-4. Front End Board (Sheet 2 of 2)

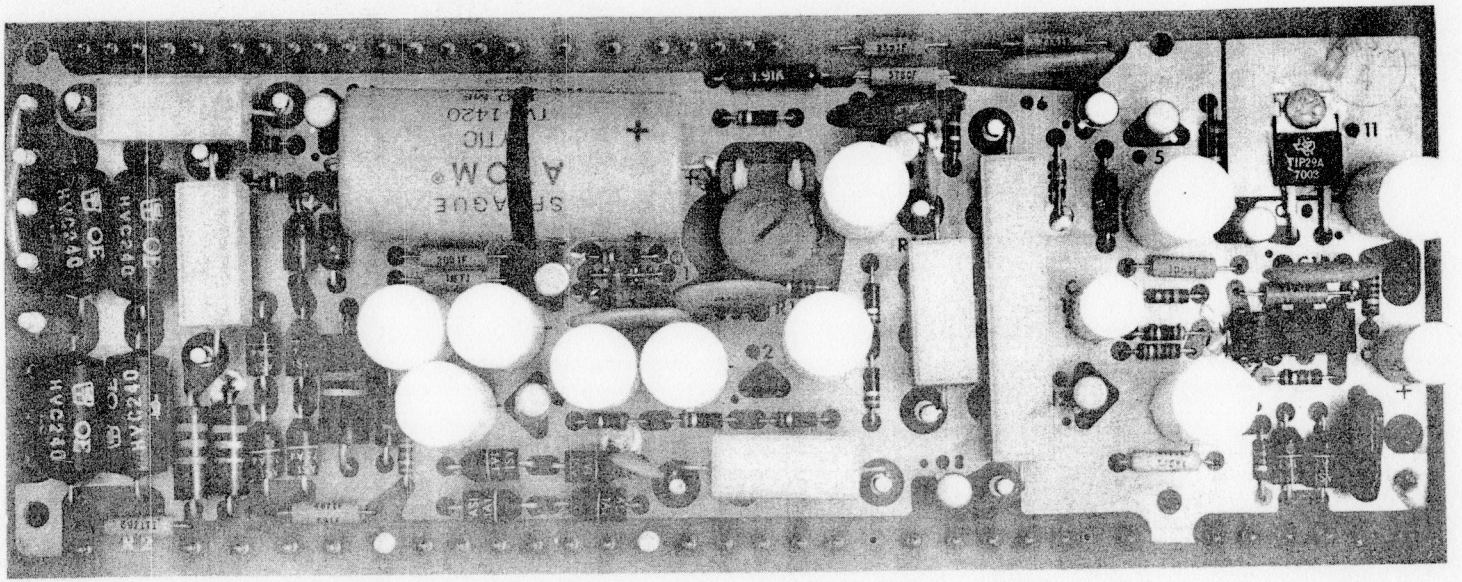

Figure 4-5. Power Supply Board (Sheet 1 of 2)

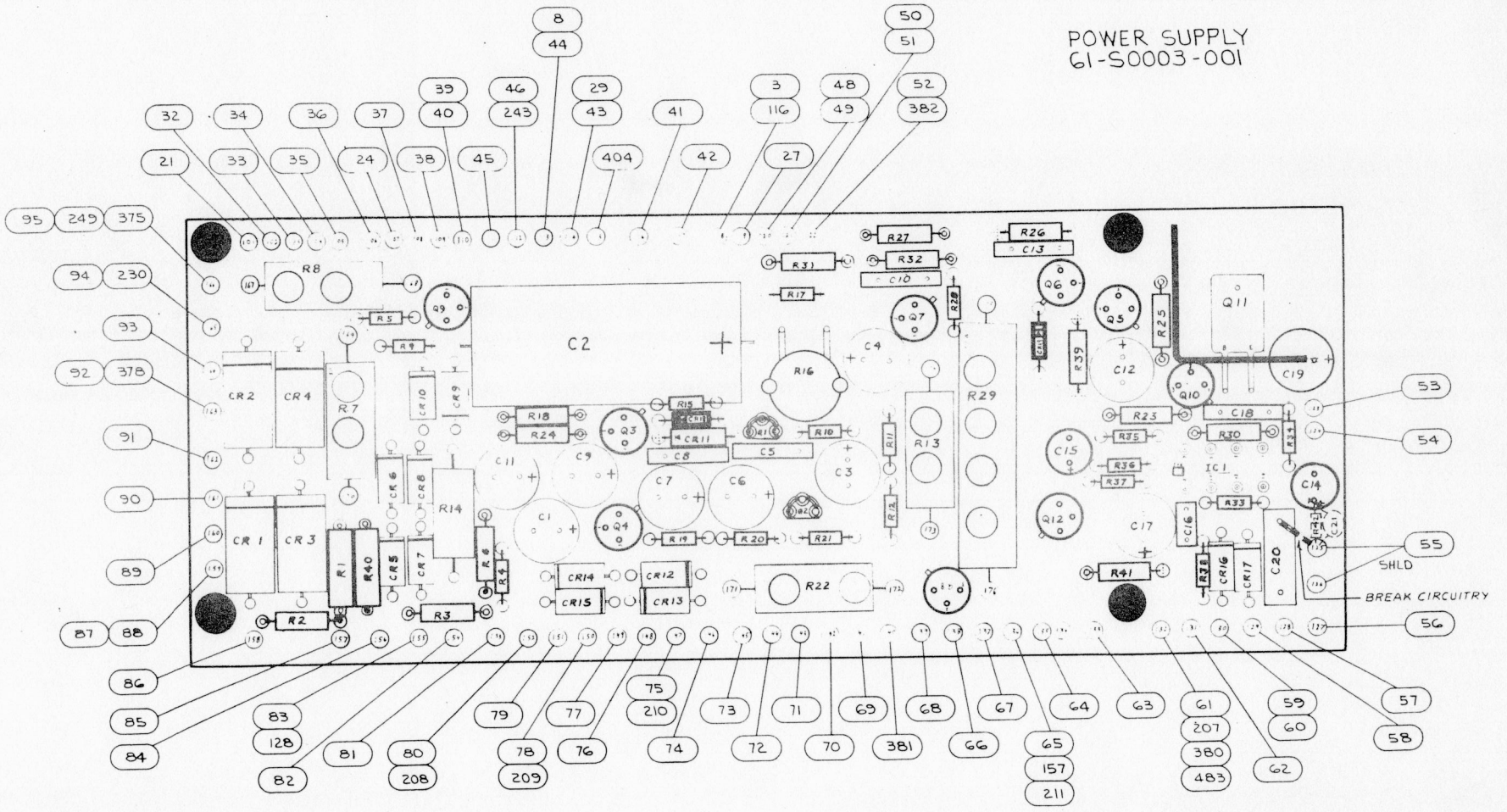

Figure 4-5. Power Supply Board (Sheet 2 of 2)

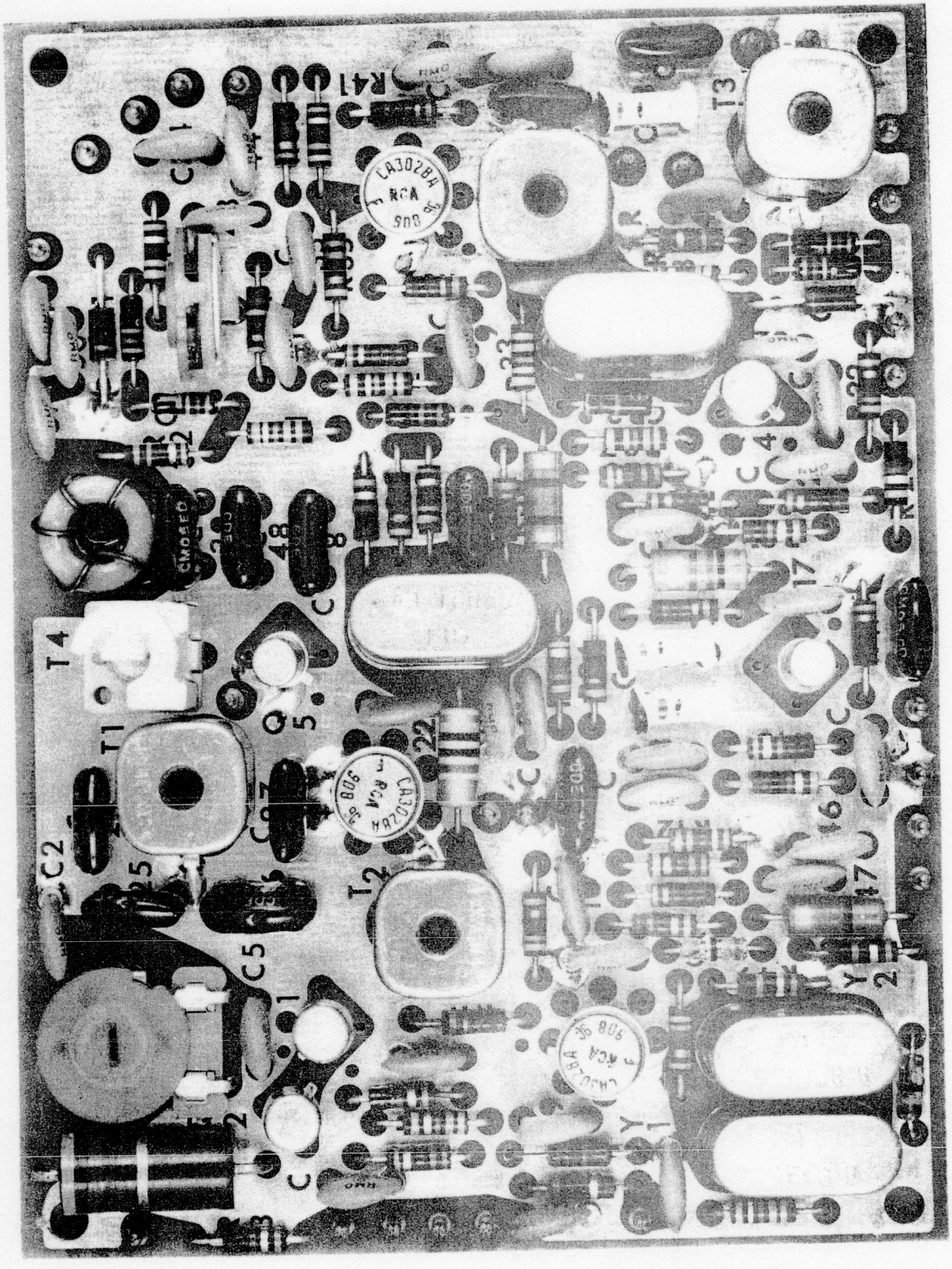

Figure 4-6. BFO Board (Sheet 1 of 2)

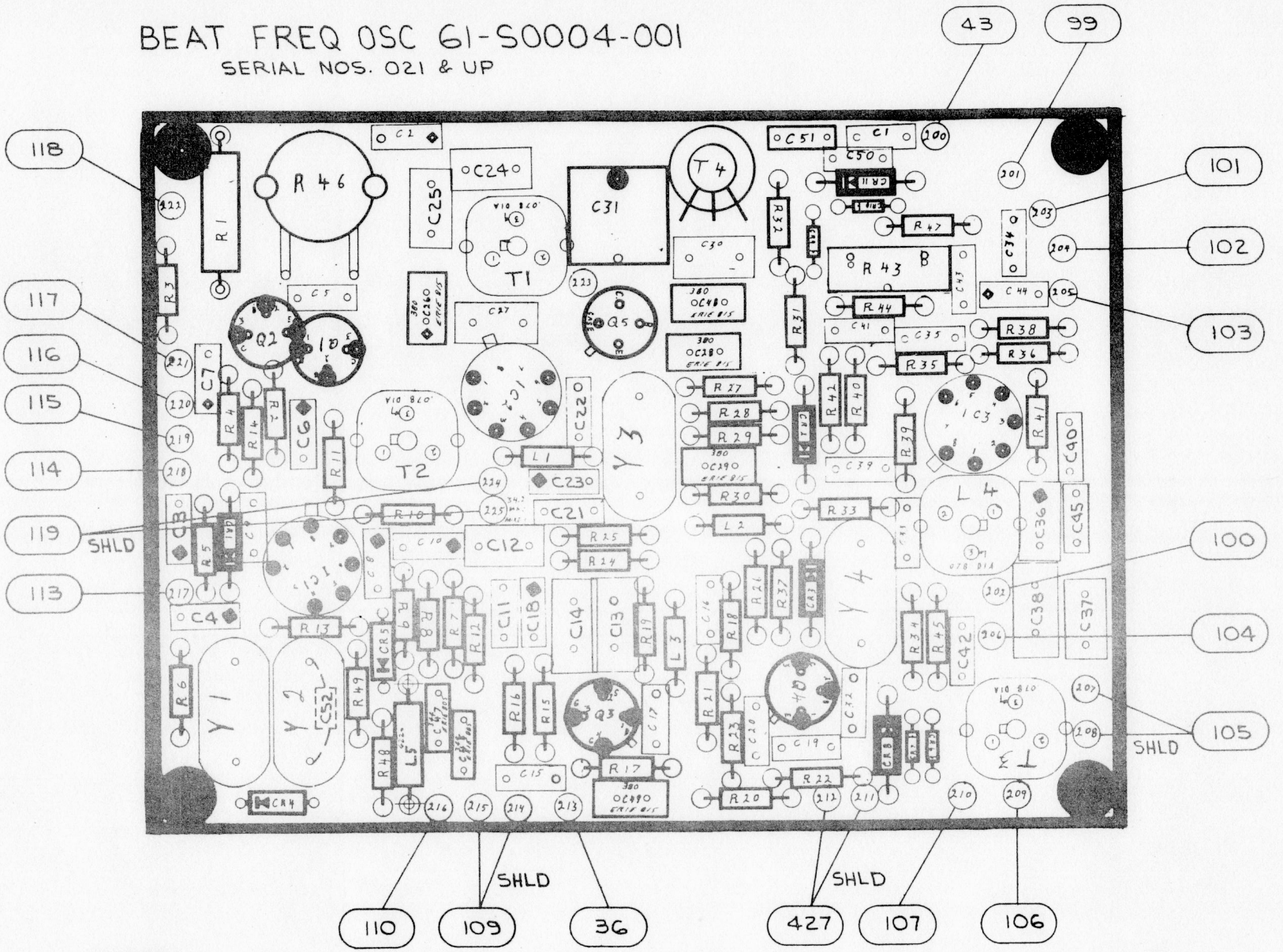

Figure 4-6. BFO Board (Sheet 2 of 2)

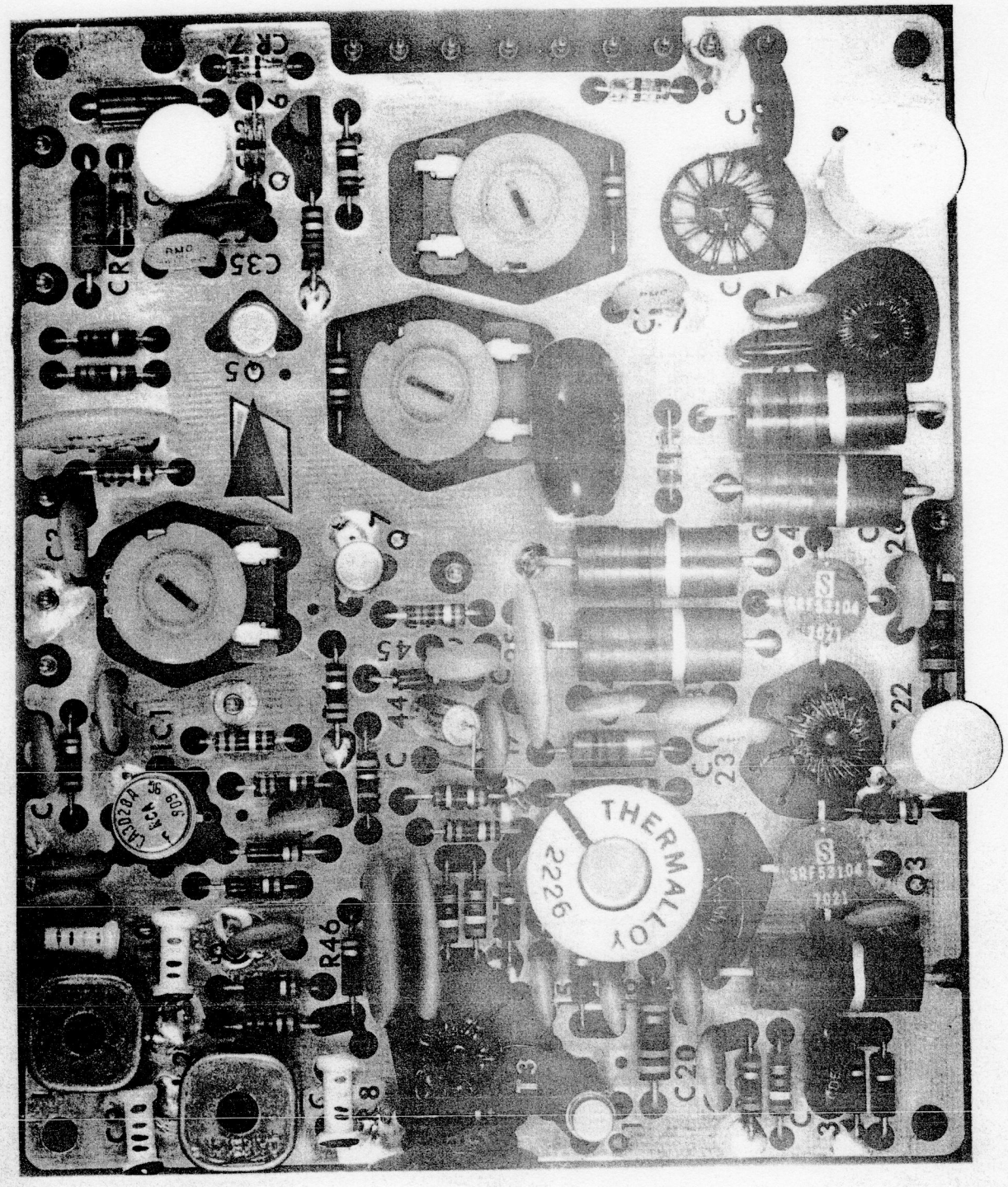

Figure 4-7. RF Driver Board (Sheet 1 of 2)

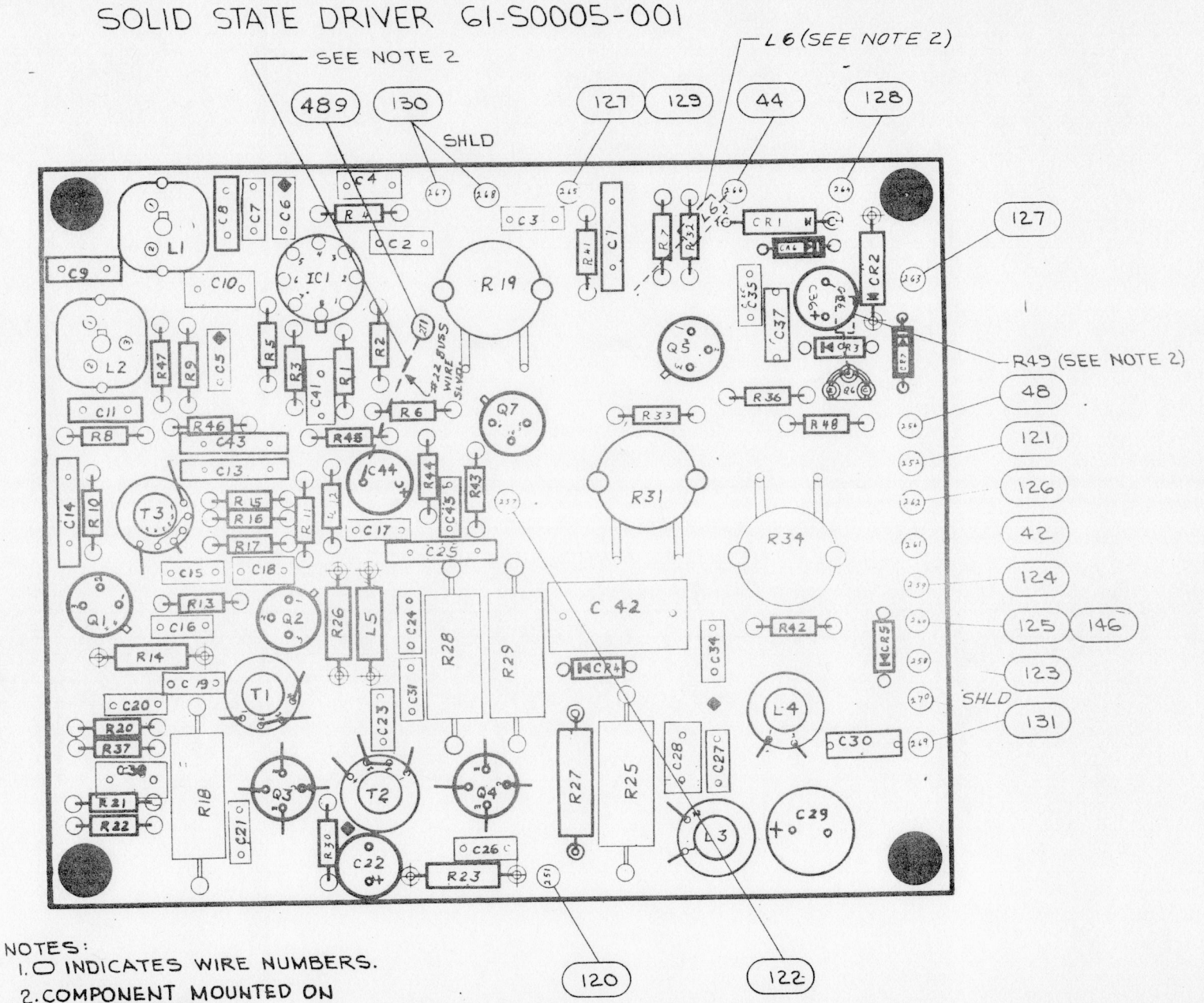

Figure 4-7. RF Driver Board (Sheet 2 of 2)

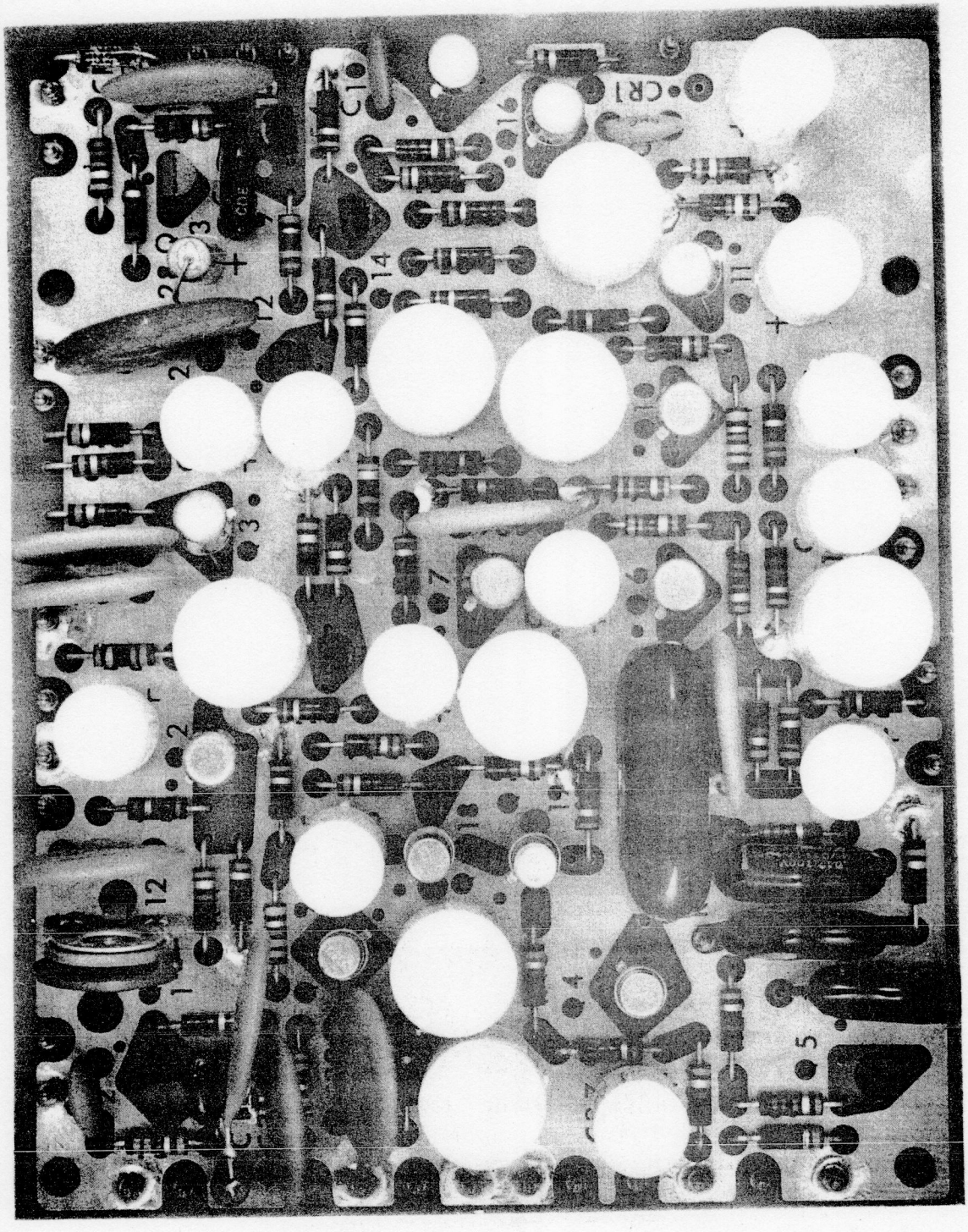
CR1
C1
C2
C3
C4
C5
C6
C7
C8
C9
C10
C11
C12
C13
C14
C15
C16
C17
C18
C19
C20
C21
C22
C23
C24
C25
C26
C27
C28
C29
C30
C31
C32
C33
C34
C35
C36
C37
C38
C39
C40

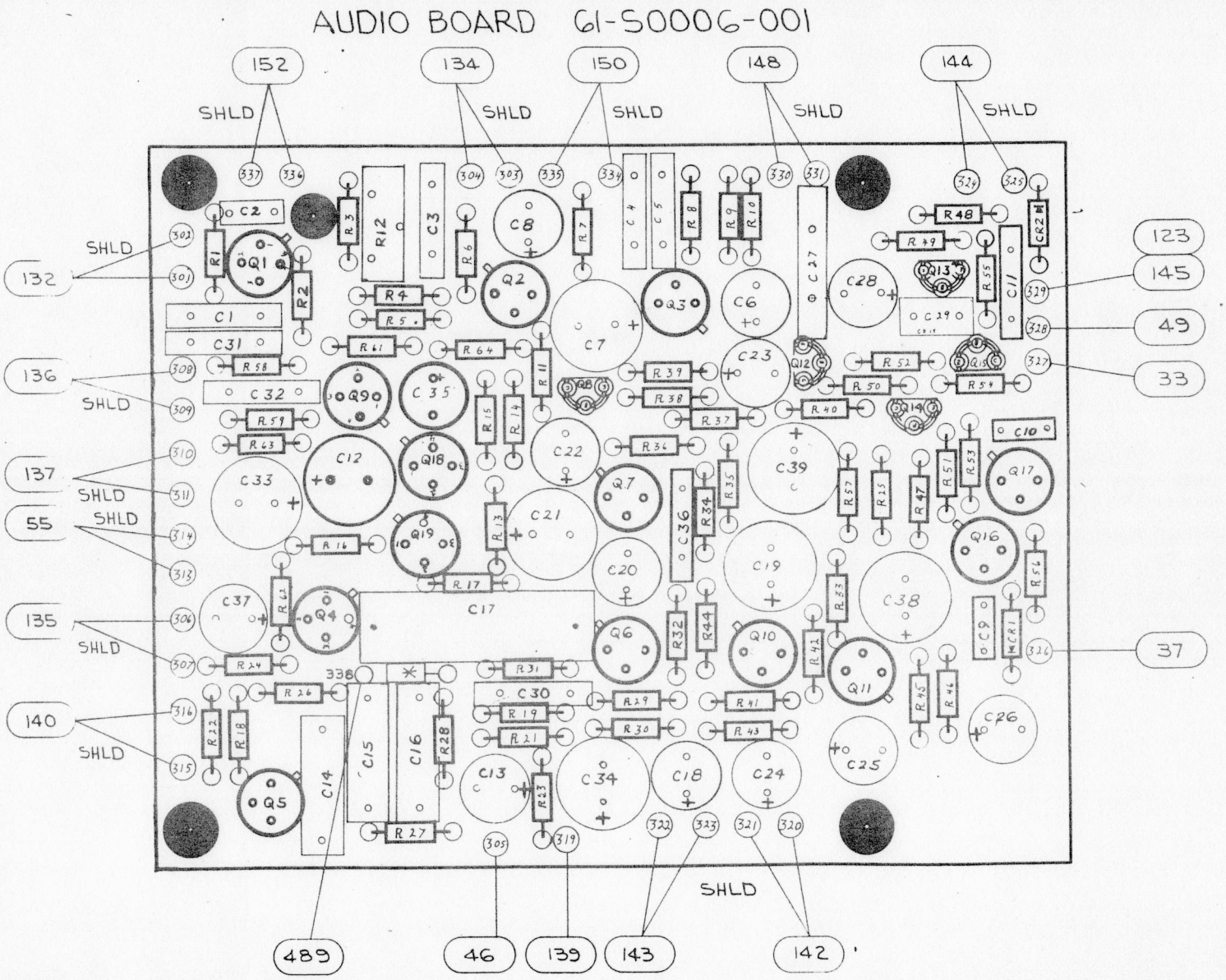

Figure 4-8. Audio Board (Sheet 2 of 2)

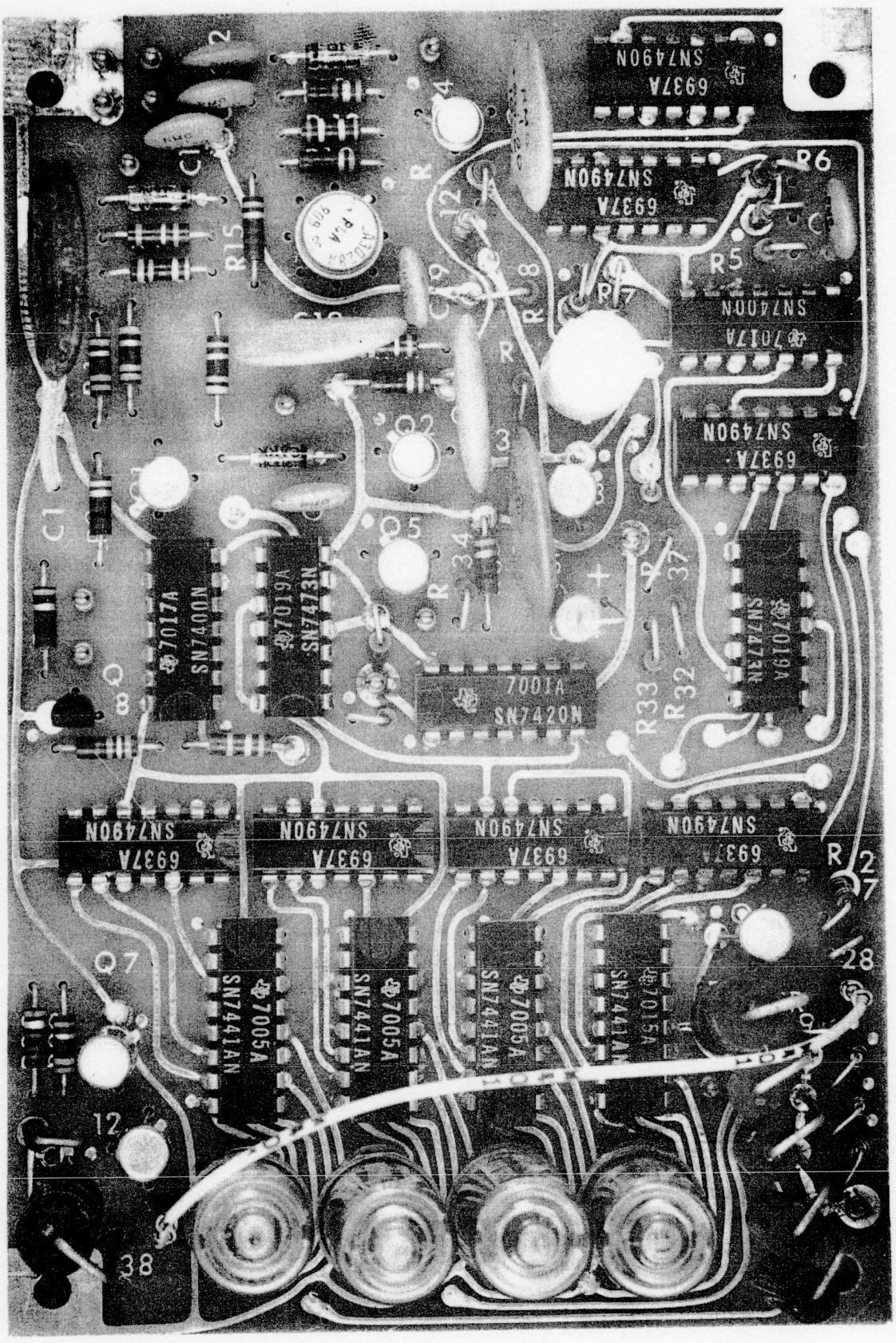

Figure 4-9. Counter Board (Sheet 1 of 2)

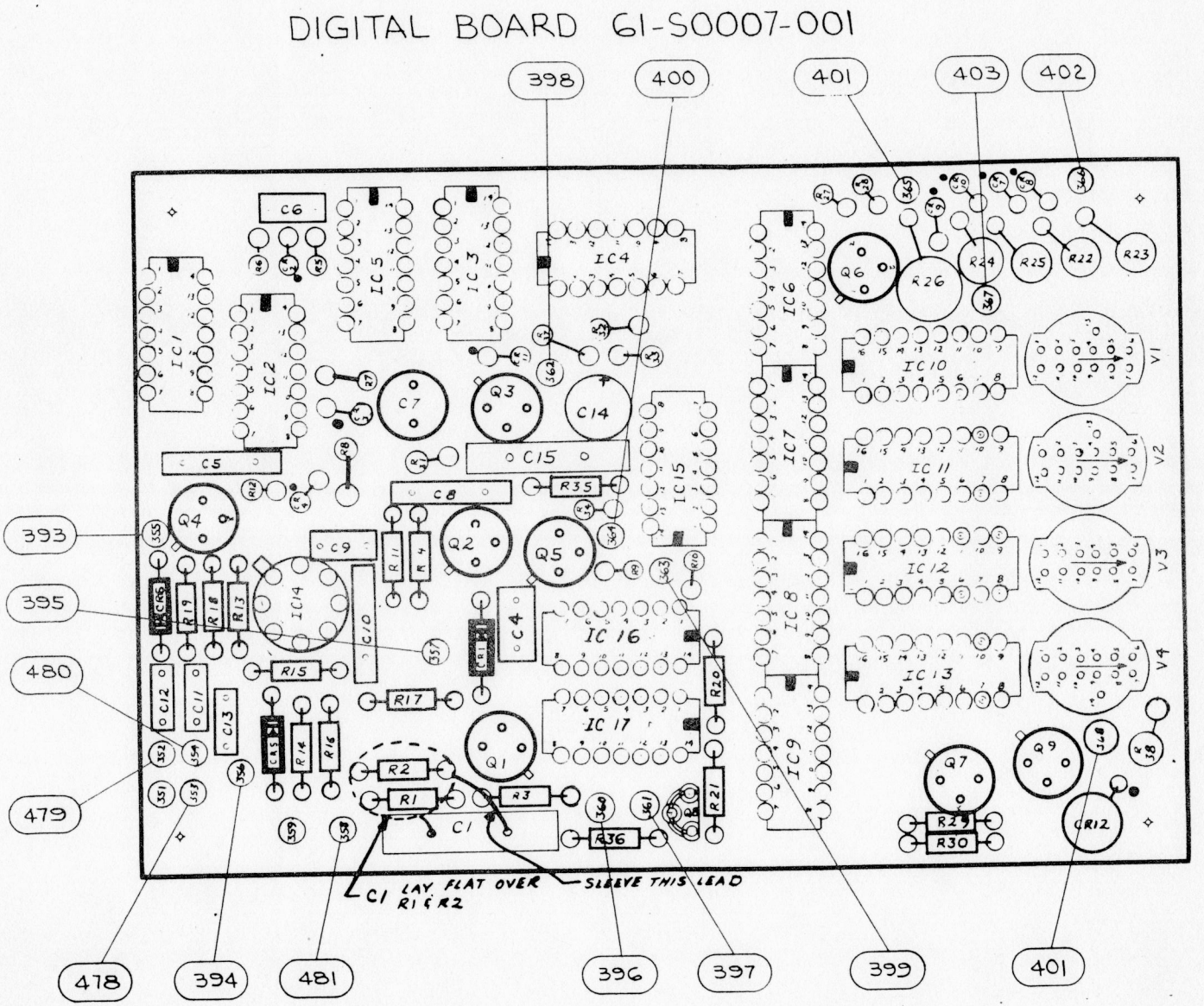

NOTES:
1. ○ INDICATES WIRE NUMBERS.

Figure 4-9. Counter Board (Sheet 2 of 2)

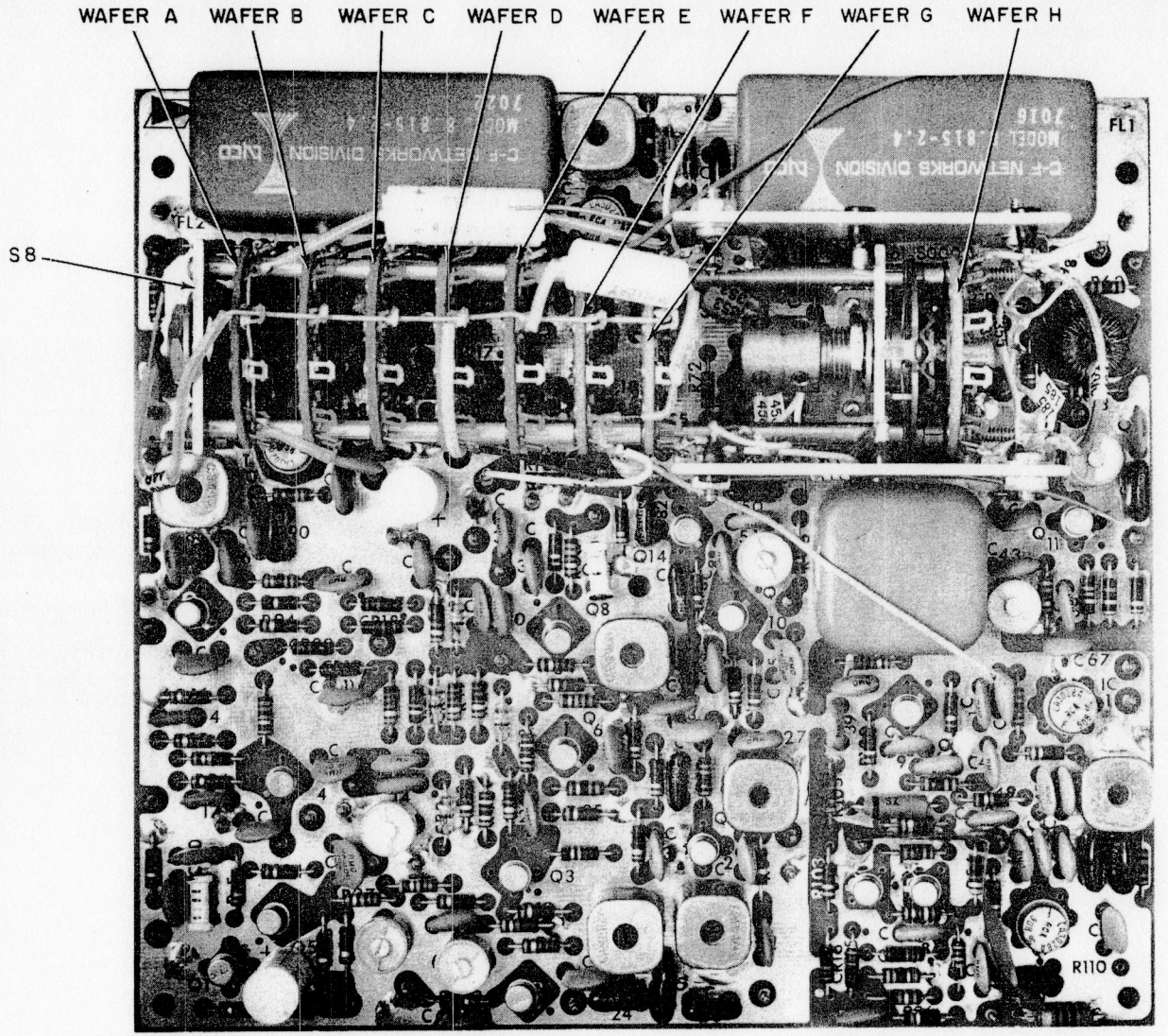

Figure 4-10. IF Board (Sheet 1 of 2)

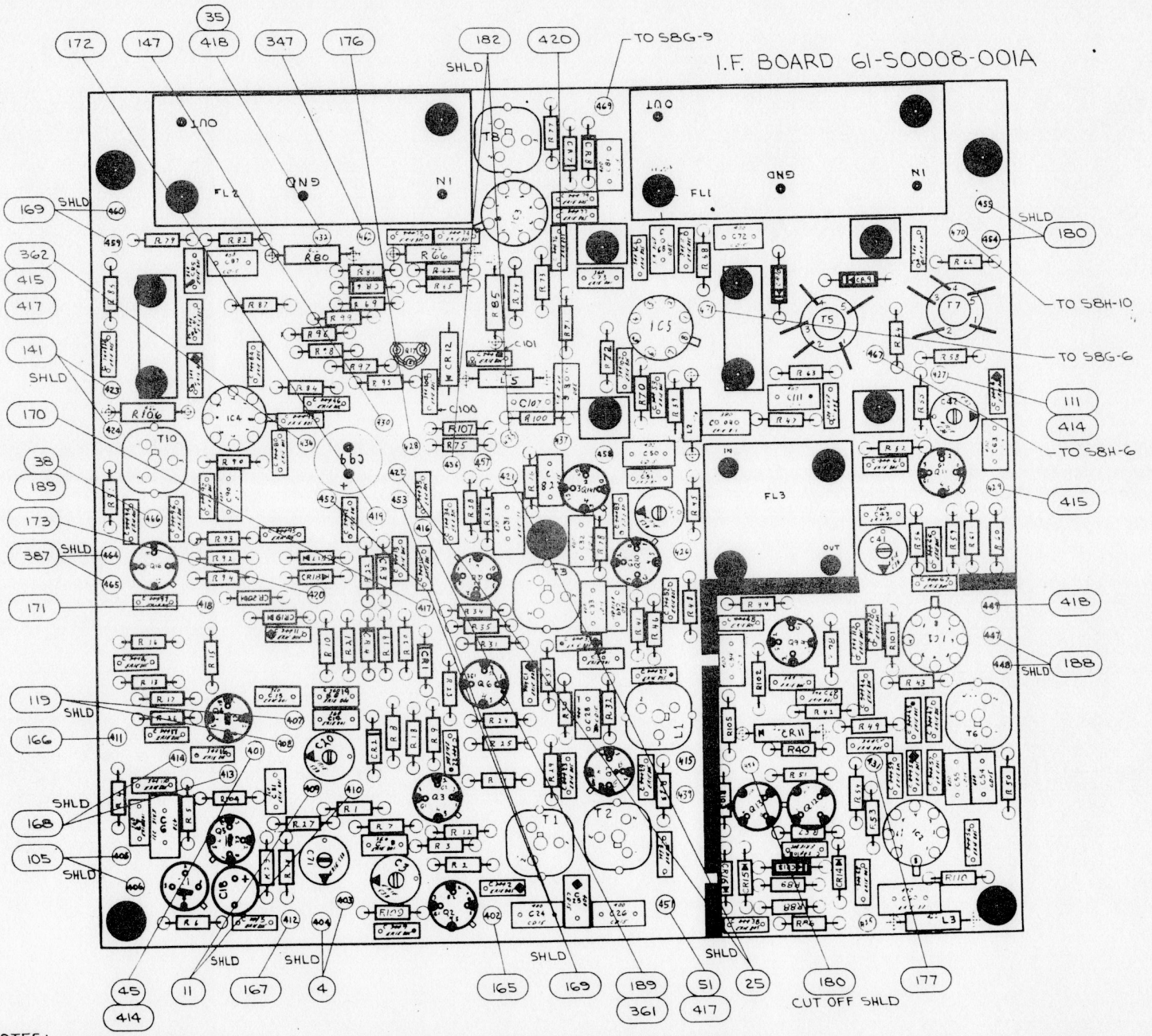

Figure 4-10. IF Board (Sheet 2 of 2)

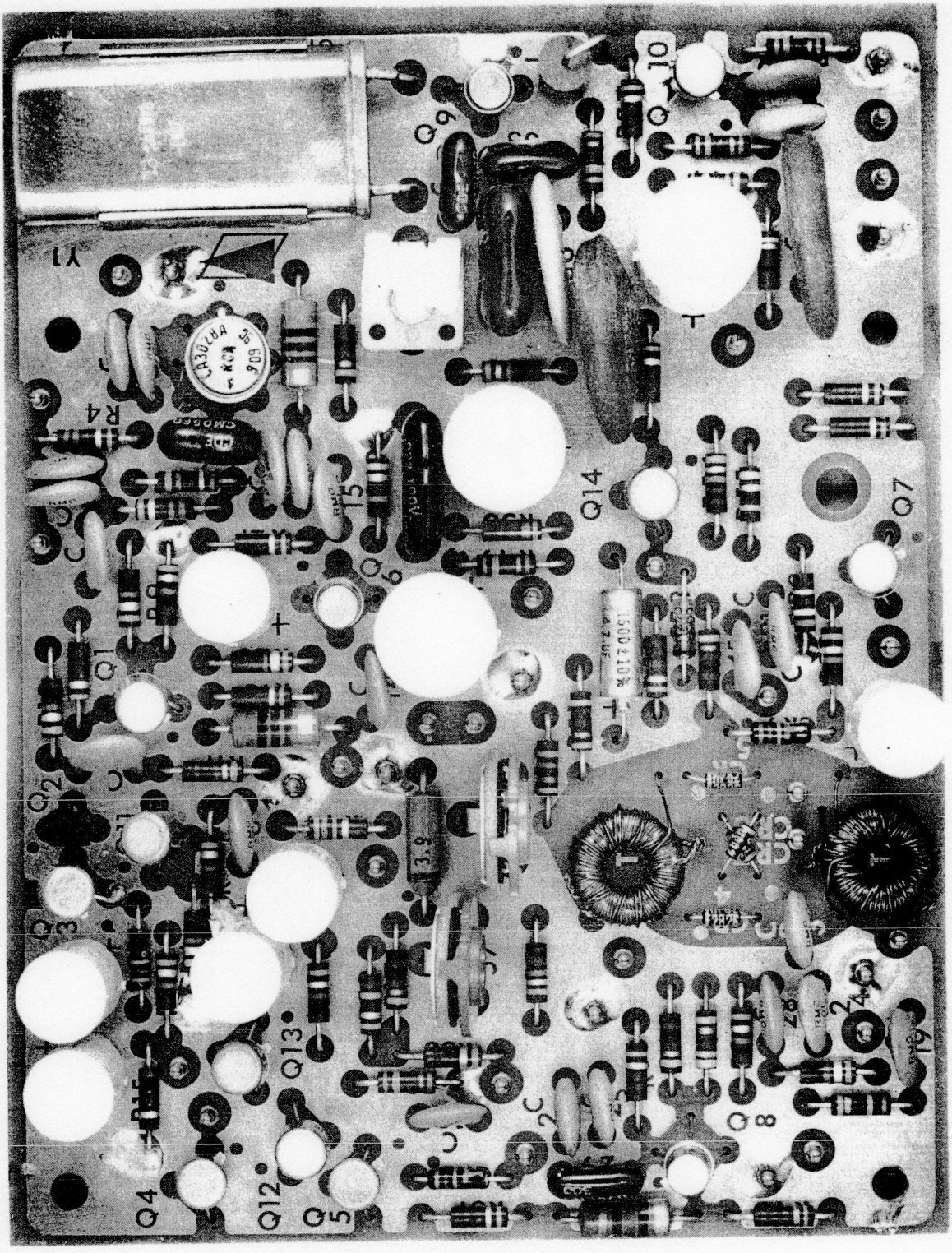

Figure 4-11. AGC/Detector Board (Sheet 1 of 2)

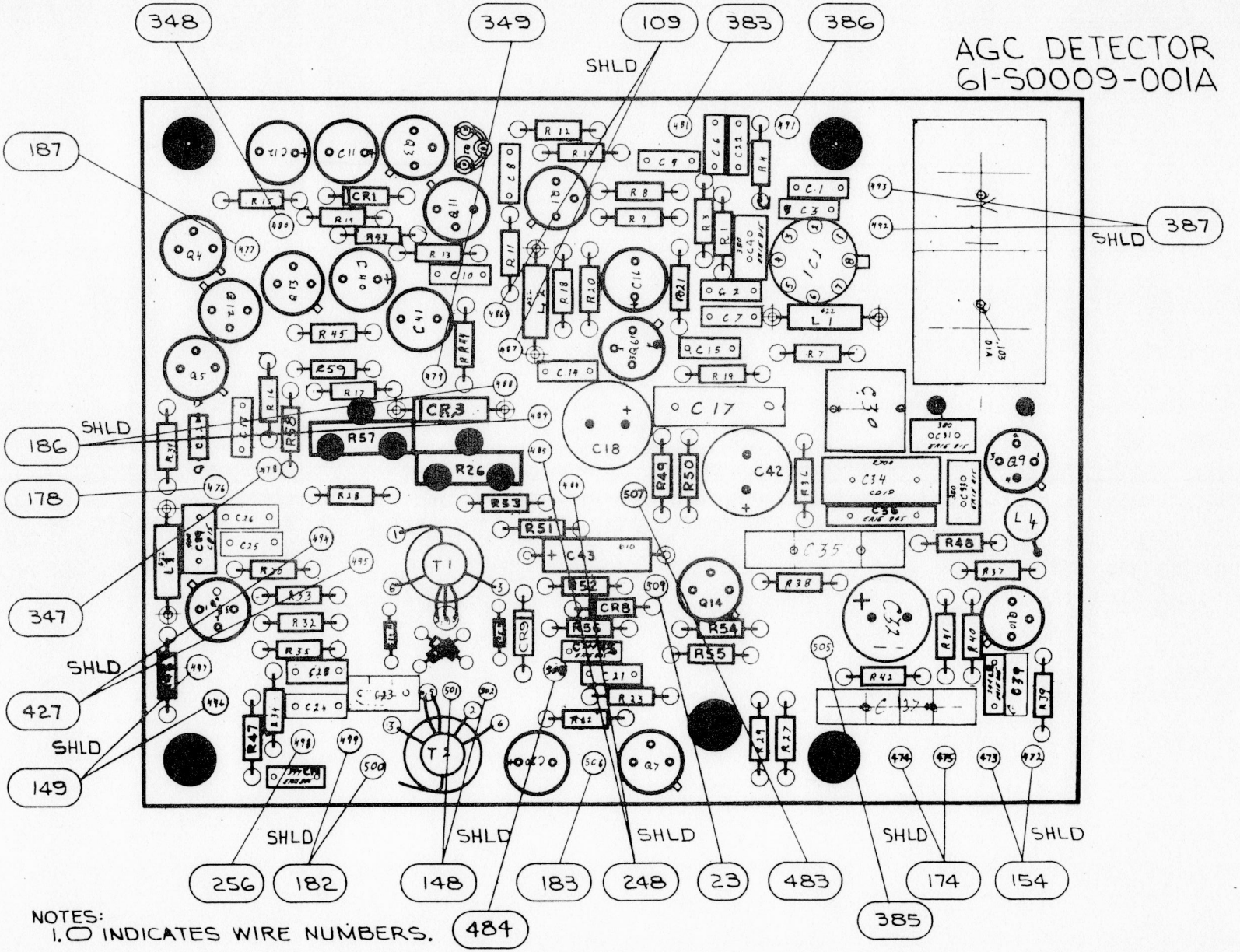

Figure 4-11. AGC/Detector Board (Sheet 2 of 2)

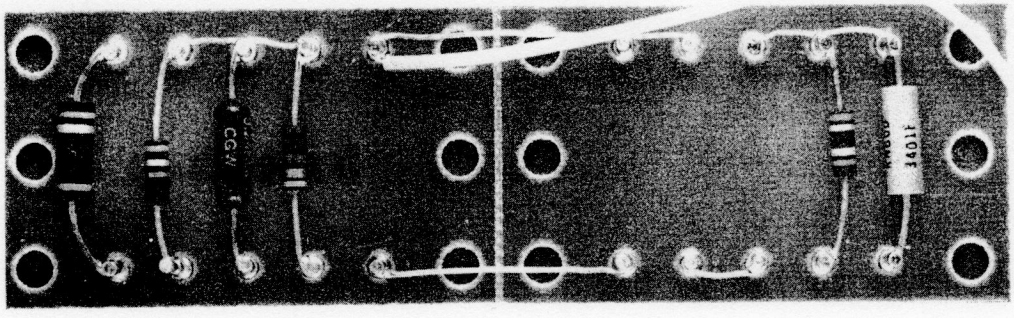

Figure 4-12a. TB1 Board

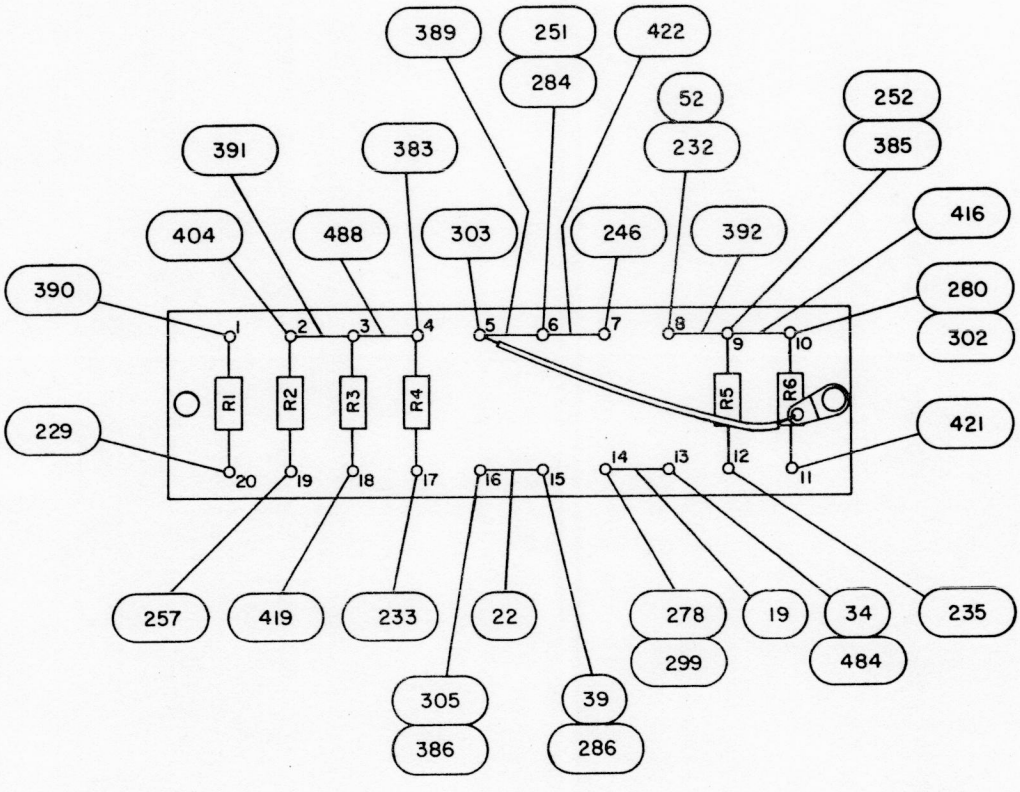

Figure 4-12b. TB1 Board

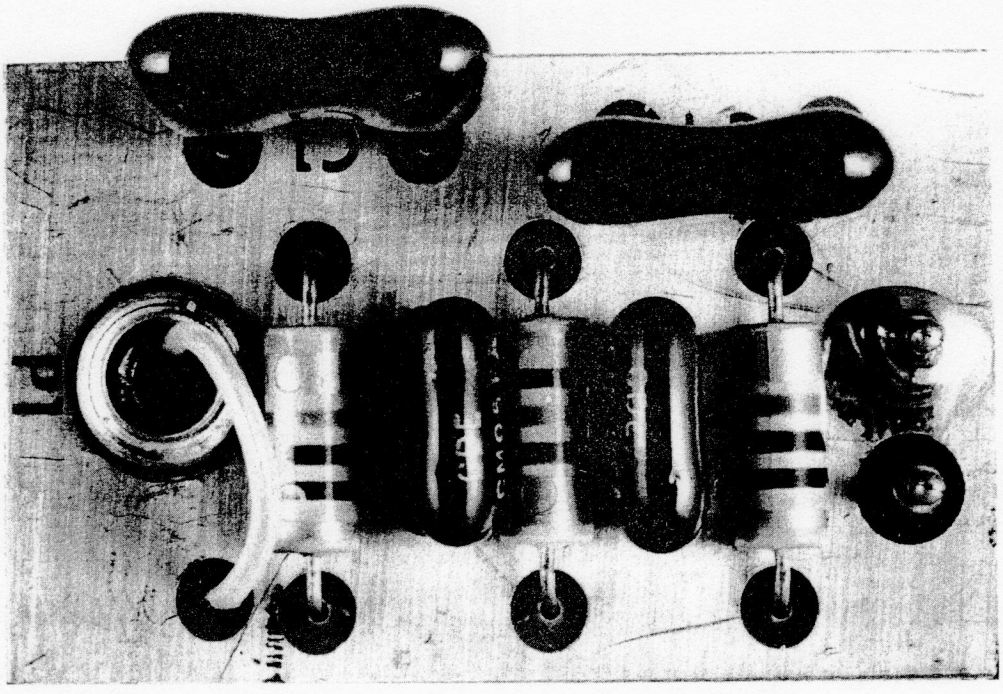

Figure 4-13a. Hi-Pass Filter Board

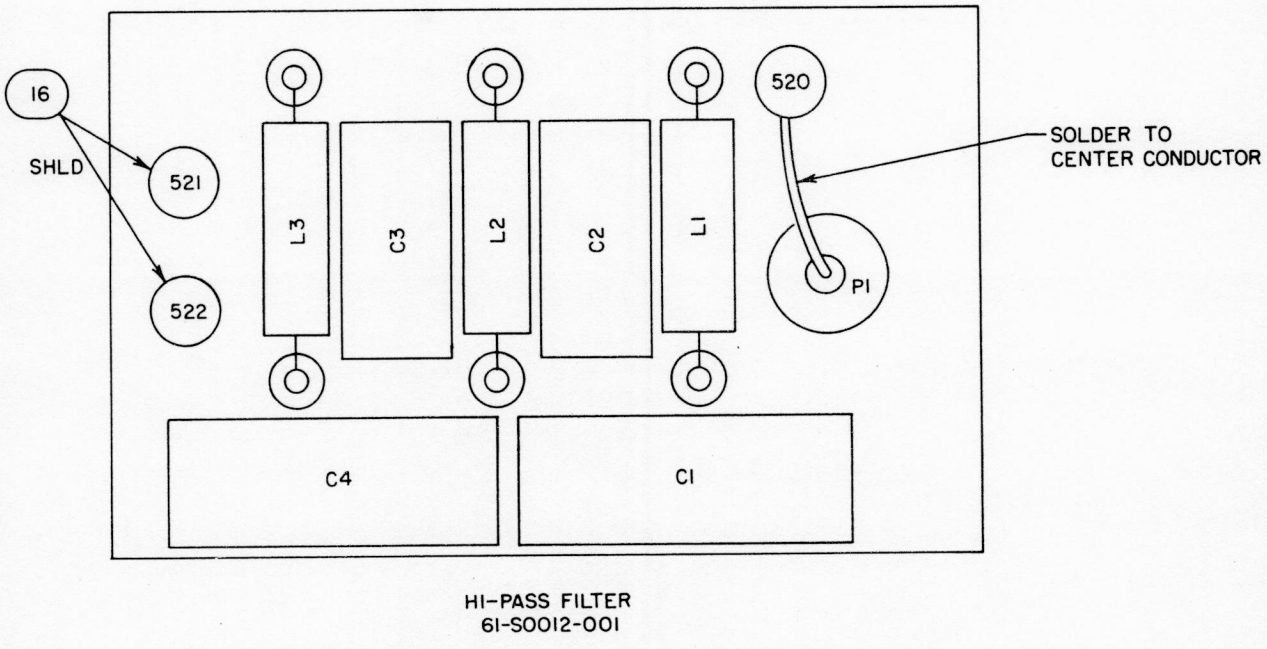

Figure 4-13b. Hi-Pass Filter Board

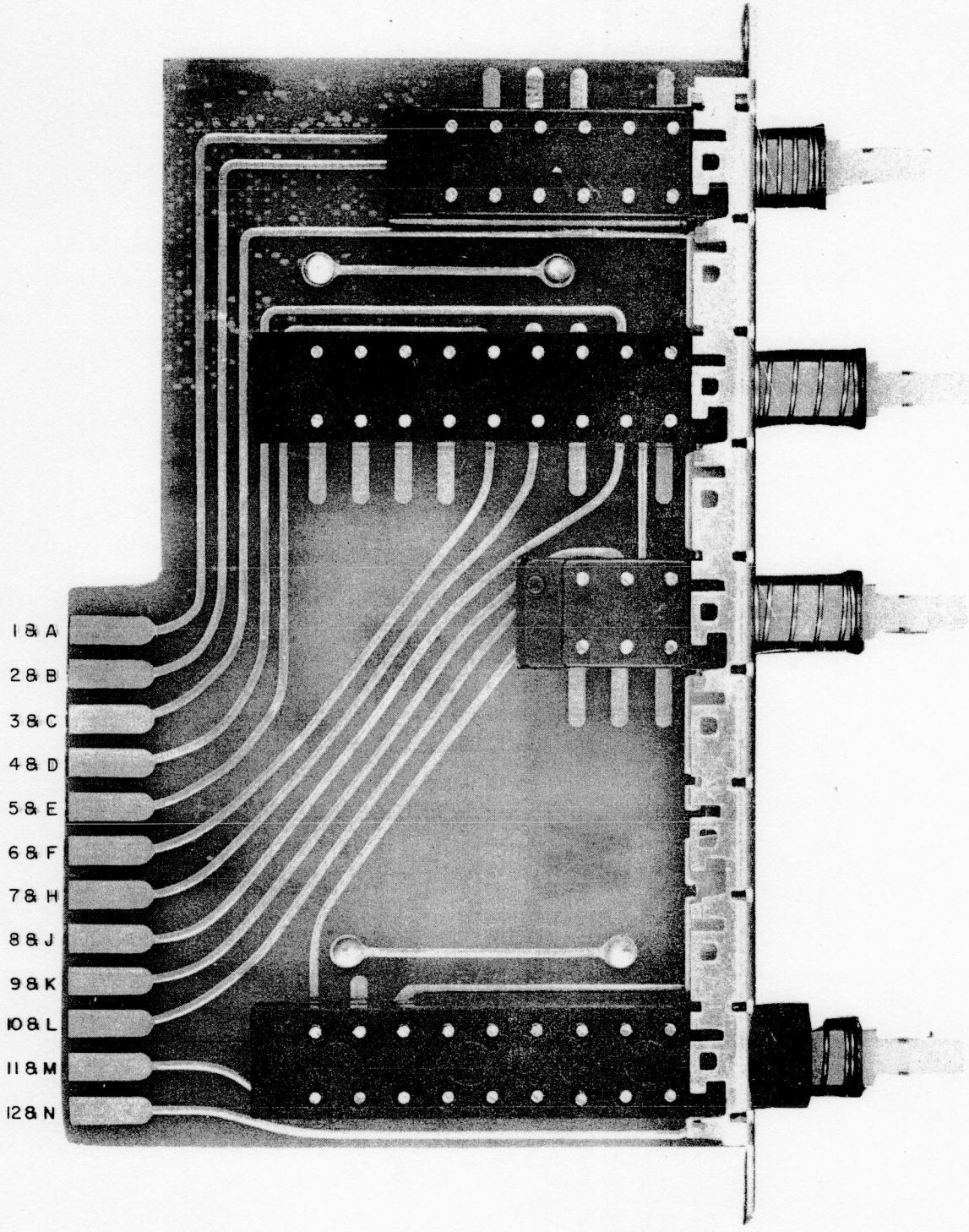

Figure 4-14. S2 Board

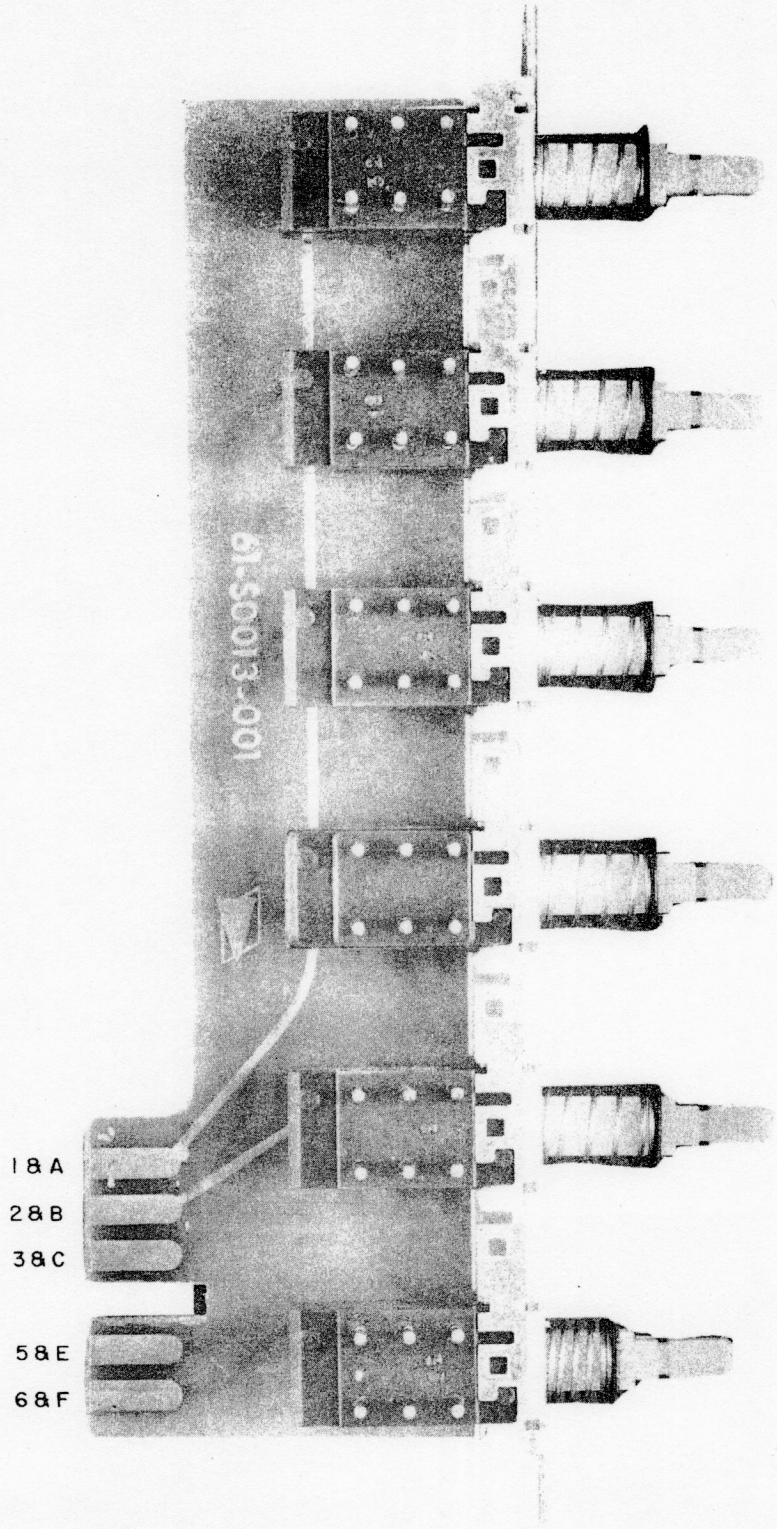

Figure 4-15. S3 Board

NOTES

4.4.2 Obtaining Replacement Parts

a. Standard Parts. All electrical and mechanical part replacements can be obtained through Signal/One. However, many of the standard electronic components can be obtained locally in less time. Before purchasing or ordering replacement parts, check the parts lists for value, tolerance, rating, and description.

NOTE

When selecting replacement parts, it is important to remember that the physical size and shape of a component may affect its performance in the instrument, particularly at high frequencies. All replacement parts should be direct replacements unless it is known that a different component will not adversely affect performance.

b. Special Parts. In addition to the standard electronic components, some special components are used. These components are manufactured or selected by Signal/One to meet specific performance requirements, or are manufactured for Signal/One in accordance with our specifications. Order all special parts directly from your local distributor or Signal/One.

c. Ordering Parts. When ordering replacement parts, include the following information:

1. Model number of equipment

2. Serial number of equipment

3. Description of the part (if electrical, include circuit number)

4. Signal/One part number.

4.4.3 Soldering Techniques

WARNING

Disconnect the Model CX7 from the power source before soldering.

a. Printed Circuit Boards. Use ordinary 60/40 solder and a 35-40-watt pencil type soldering iron on the printed circuit boards. The tip of the iron should be clean and properly tinned for best heat transfer to the solder joint. A higher voltage wattage soldering iron may separate the wiring from the base material.

The following techniques should be used to replace a component on a circuit board. Most parts can be replaced without completely removing the boards from the Model CX7.

1. Grip the part lead with long-nose pliers. Touch the soldering iron to the lead at the solder connection. Do not lay the iron directly on the board. When the solder begins to melt, pull the lead gently out. If the previous method is impracticable, utilize wicking wire to first remove the solder. This can be accomplished by moistening the end portion of the wicking wire with liquid flux, placing it against the solder joint and then heating both the wicking wire and the solder joint simultaneously. The solder from the solder joint will absorb into the wicking wire.

2. This should leave a clean hole in the board. If not, the hole can be cleaned by additional wicking or reheating the solder and placing a sharp object such as a toothpick into the hole to clean it out. A vacuum-type desoldering tool can also be used for this purpose.

3. Bend the leads of the new part to fit the holes in the board. If the part is replaced while the board is mounted in the Model CX7, cut the leads so they will just protrude through the board. Insert the leads into the holes in the board so the part is firmly seated against the board (or as positioned originally). If it does not seat properly, heat the solder and gently press the part into place.

4. Touch the iron to the connection and apply a small amount of solder to make a firm solder joint; do not apply too much solder. To protect heat-sensitive parts, hold the lead between the part body and the solder joint with a pair of long nose pliers or other heat sink.

5. Clip the excess lead that protrudes through the board.

6. Clean the area around the solder connection with a flux-remover solvent. Be careful not to remove information printed on the board.

b. Metal Terminals. When soldering metal terminals (e.g., switch terminals, potentiometers, etc.), ordinary 60/40 solder can be used. Use a soldering iron with a 40-to 75-watt rating and 1/8-inch wide wedge-shaped tip.

Observe the following precautions when soldering metal terminals:

1. Apply only enough heat to make the solder flow freely.

2. Apply only enough solder to form a solid connection. Excess solder may impair the function of the part.

3. If a wire extends beyond the solder joint, clip off the excess.

4. Clean the flux from the solder joint with alcohol or chlorothene-nu.

4.4.4 Component Replacement

WARNING

Disconnect the Model CX7 from the power source before replacing components.

4.4.4.1 Printed Circuit Board Replacement. If a printed circuit board is damaged beyond repair, the entire assembly including all soldered-on parts can be replaced. Part numbers are given in the Parts List for the board. Most of the parts mounted on the printed circuit boards can be replaced without removing the boards from the chassis. Observe the soldering precautions given under Soldering Techniques in this section. However, if the bottom side of the board must be reached or if the board must be moved to gain access to other areas, only the mounting screws need to be removed. The interconnecting wires on most of the boards are long enough to allow the board to be moved out of the way or turned without disconnecting all of the pin connectors. Most of the connections to the circuit boards are made with pin connections; however, special cases exist where connections are soldered.

To unplug the single-wire pin connectors, grip the connector with a long-nose pliers and pull. Do not unplug the connection by pulling the wire. The connectors should fit tightly. Reconnect them using the reverse method. If the connectors fit loosely, unplug and squeeze the female connector with the pliers to slightly decrease its diameter and then reconnect. Interconnecting wires are identified by either color of insulation, numbered tags or numbers marked on the insulation. The wire identification is noted on the applicable printed circuit board shown in Figures 4-3 through 4-15. The location of the Model CX7 printed circuit boards is shown in Figures 4-1 and 4-2.

a. Front End Board

1. Set the front panel "MHZ" band selector switch to the "1" position.

2. Loosen the four Allen setscrews (use a 0.050 and a 1/16 Allen wrench) in the coupling collar shown in Figure 4-16. Pull the "MHZ" knob, with it still attached to the shaft, directly out of the front panel.

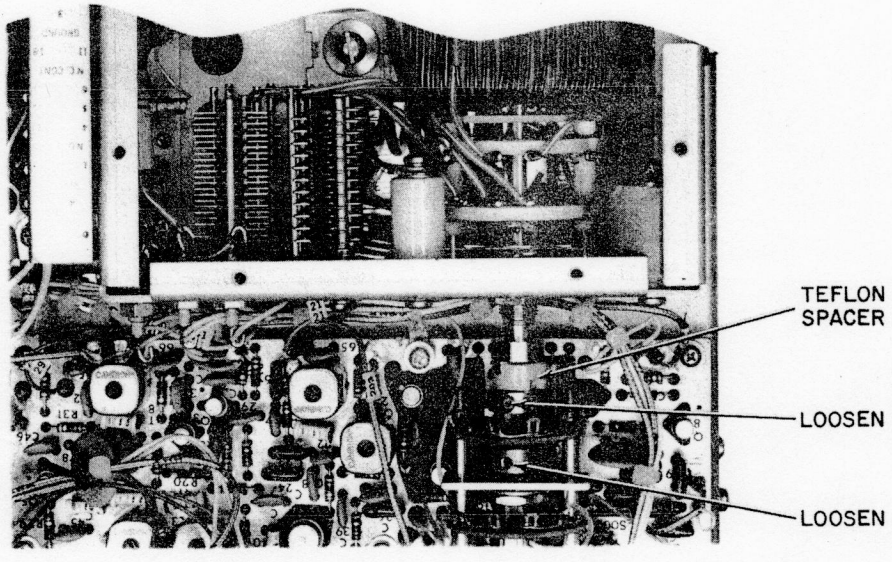

Figure 4-16. Coupling Collars for Front End Board "MHZ" Selector Switch

3. Without unsoldering the wires, remove the front panel "PHONES" and "MIKE" plugs so that they will not obstruct Front End board removal.

4. Unplug wire #190 from the bottom of the Front End board. This wire may be reached through the cut-out on the top of the Model CX7 chassis.

5. Unplug the wires from the top of the Front End board.

6. Remove the seven Phillips-head screws (located on the inside corner, four outside corners, and middle back-side) and washers from the top of the Front End board.

7. Carefully lift out the Front End board. Note that the white teflon, notched spacer may drop off. The spacer must be manually held on the shaft when reinstalling the board.

8. When reinstalling board, do not omit the ground strap connections.

b. PTO A or B Module

1. Loosen the two setscrews in the applicable "VFO A" or "VFO B" knob (use 5/64 Allen wrench) and remove knob.

2. Unsolder the wires from the six feedthru terminals on the rear of the applicable PTO (see Figure 4-17) and remove the Phillips-head screw retaining the ground strap.

3. Remove the three Phillips-head screws near the applicable PTO A or B shaft.

PTO B Removal: Carefully lift out PTO B. (See caution note.)

PTO A Removal: Carefully lift out PTO A. It may be necessary to gently pry PTO A out of the chassis cut-out using a thin blade screwdriver.

CAUTION

Use caution when lifting out the PTO so as not to break the leaf spring that grounds the PTO shaft.

4. To remove the PTO cover, loosen the two Phillips-head screws located on the top and bottom of the cover and slide off cover.

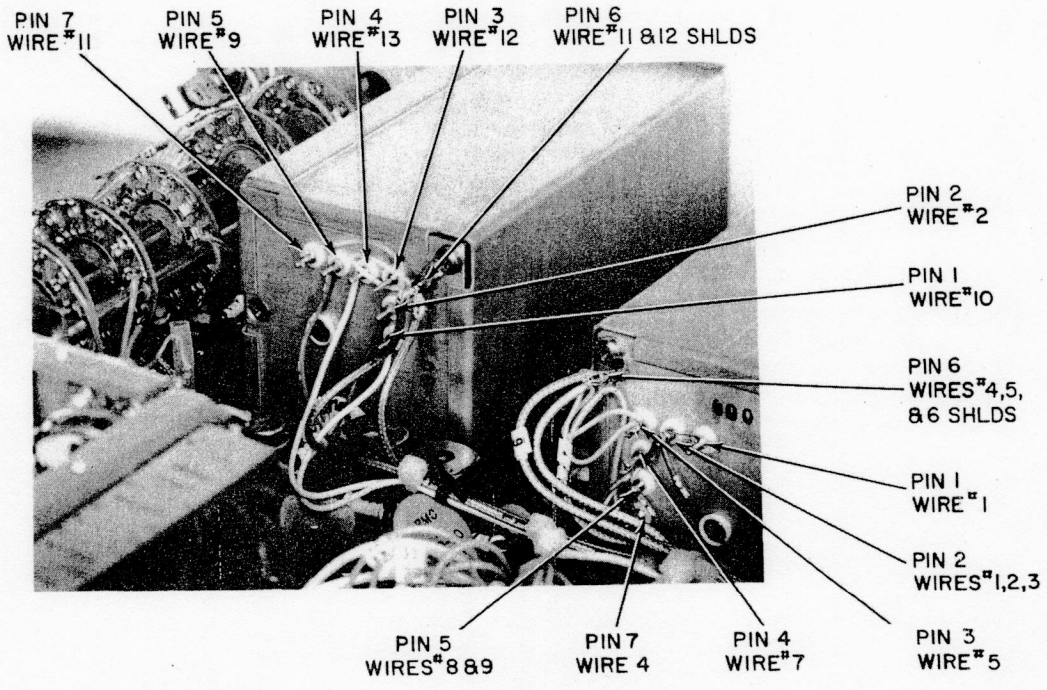

Figure 4-17. PTO Terminals

c. IF Board

1. Set the "MODE" selector switch to the "CW1" position, and loosen the Allen setscrew (use a .050 Allen wrench) in the coupling collar shown in Figure 4-18.

2. Set the "MODE" selector switch to the "AM" position and loosen the associated Allen setscrew. Pull the "MODE" knob, with it still attached to the shaft, directly out of the front panel.

3. Unplug the wires from the top of the IF board.

4. Unplug the interboard wires that are attached to the "MODE" switch wafers and remove the four Phillips-head screws that retain the switch assembly to the IF board. Lift out the switch assembly.

5. Remove the five Phillips-head screws (located in the middle and on the four corners) and washers from the top of the IF board.

6. Carefully slide the IF board out from underneath "GAIN" potentiometer.

7. When reinstalling board, do not omit the ground strap connection.

d. Power Supply Board

WARNING

Charged capacitors may cause high voltage to exist on some terminals even with the Model CX7 removed from the power source. Momentarily short each Power Supply board pin to ground using a metal screwdriver with an insulated handle.

1. Unplug the wires from the Power Supply board.

2. Unsolder the interboard wires attached to the Power Supply board terminals.

3. Remove the four Phillips-head screws (located in each corner) and washers from the top of the board.

4. Lift out the Power Supply board.

5. When reinstalling board, do not omit the ground strap connections.

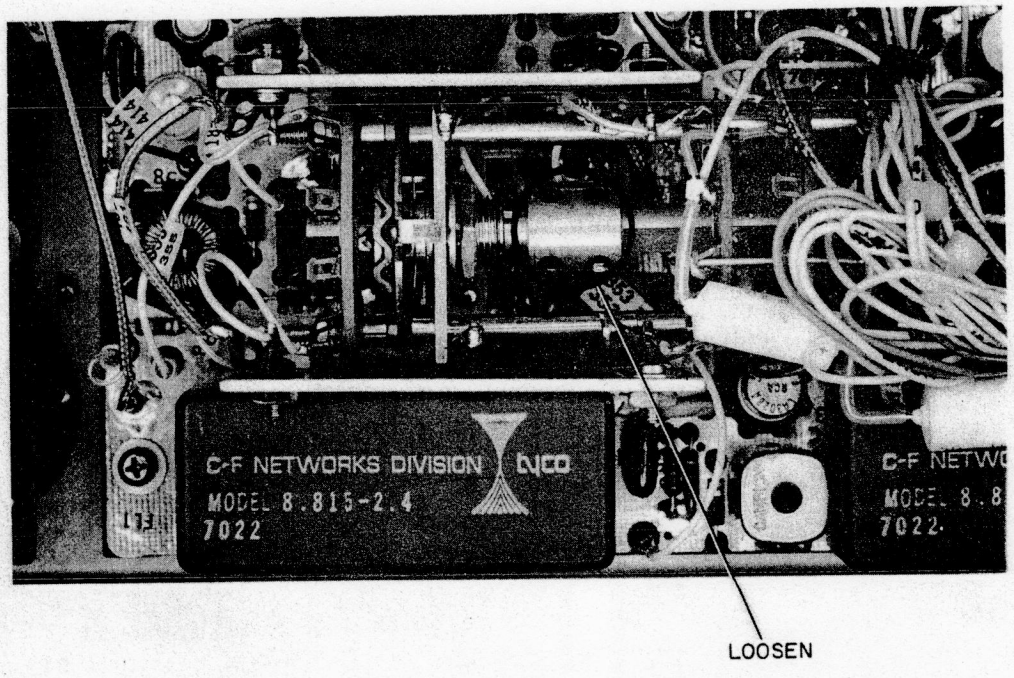

Figure 4-18. Coupling Collar for IF Board "MODE" Selector Switch

e. RF Driver Board

1. Unplug the wires from the RF Driver board.

2. Remove the four Phillips-head screws (located on each corner) and washers from the top of the board.

3. Remove the three Phillips-head screws and washers on the opposite side of the chassis (located between the two PTO modules, nearest PTO A. See Figure 4-19). Note that one of the screws is located under the Front End board near L4. It is necessary to partially remove or lift the Front End board to reach this screw.

4. Set the front panel "PRESELECTOR" control to the "1" position so that the rotor plates will not obstruct RF Driver board removal.

5. Carefully slide the RF Driver board out from underneath the loading capacitor shaft.

6. Prior to reinstalling board, apply a new layer of silicon heat-sink compound (Dow Corning #340) on the outside of the heat sink plate located on the bottom of the RF Driver board.

WARNING

Handle silicon heat-sink compound with care, avoid getting the compound in the mouth or eyes.

7. When reinstalling the board, do not omit the ground strap connections.

f. Counter Board

1. Remove the four Phillips-head screws and washers located on the lip of the Counter board cover.

2. Lift off Counter board cover.

3. Unplug the wires from the Counter board.

4. Remove the four Phillips-head screws (located on each corner) and washers from the top of the board.

5. Lift out the Counter board.

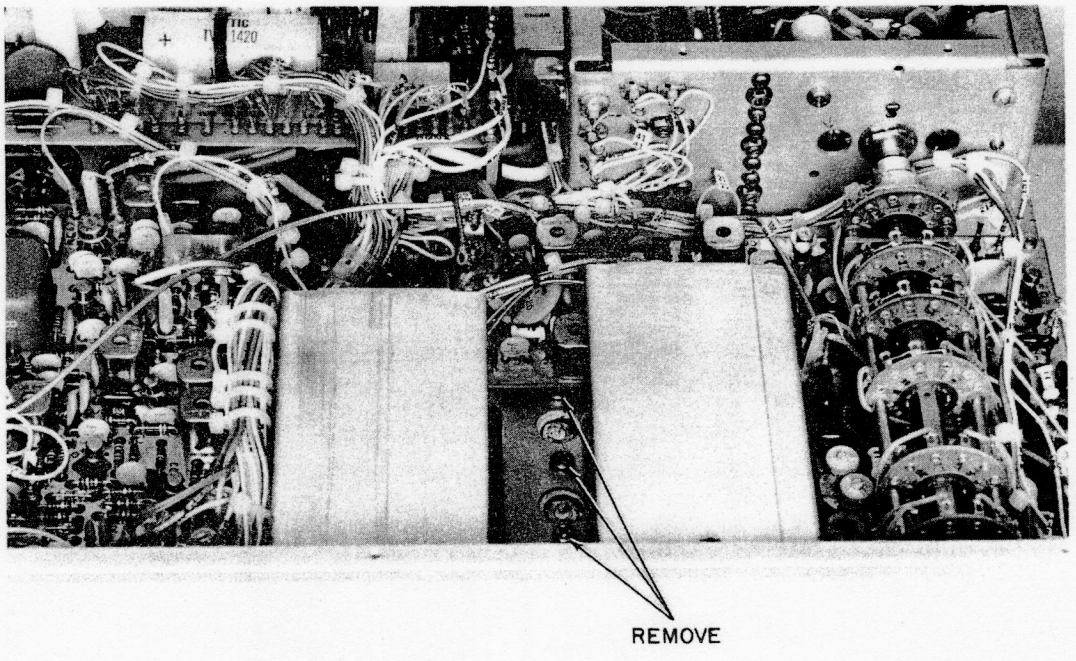

Figure 4-19. Location of Screws Retaining Bottom of RF Driver Board

g. AGC Detector Board

1. Unplug the wires from the AGC Detector board.

2. Remove the four Phillips-head screws (located on each corner) and washers from the top of the board.

3. Lift out the AGC Detector board.

4. When reinstalling board, do not omit the ground strap connections.

h. Audio Board

1. Remove the AGC Detector board.

2. Unplug the wires from the Audio board.

3. Unscrew the four standoffs that held the AGC Detector board.

4. Lift out the Audio board.

5. When reinstalling the board, do not omit the ground strap connection.

i. BFO Board

1. Remove the AGC Detector board and the Audio board.

2. Remove the four Phillips-head screws and washers located on the lip of the BFO cover.

3. Lift off BFO board cover.

4. Unplug the wires from the BFO board.

5. Remove the four Phillips-head screws (located on each corner) and washers from the top of the board.

6. Lift out the BFO board.

4.4.4.2 Miscellaneous Part Replacement

a. Field-Effect Transistors. Precautions must be taken to prevent static electricity from damaging the new part. This can be accomplished by temporarily shorting all the leads together until they have been soldered to the circuitry.

b. TAB Transistors. TAB transistors which are mounted on the rear panel or a printed circuit board ground-plane use silicon heat sink

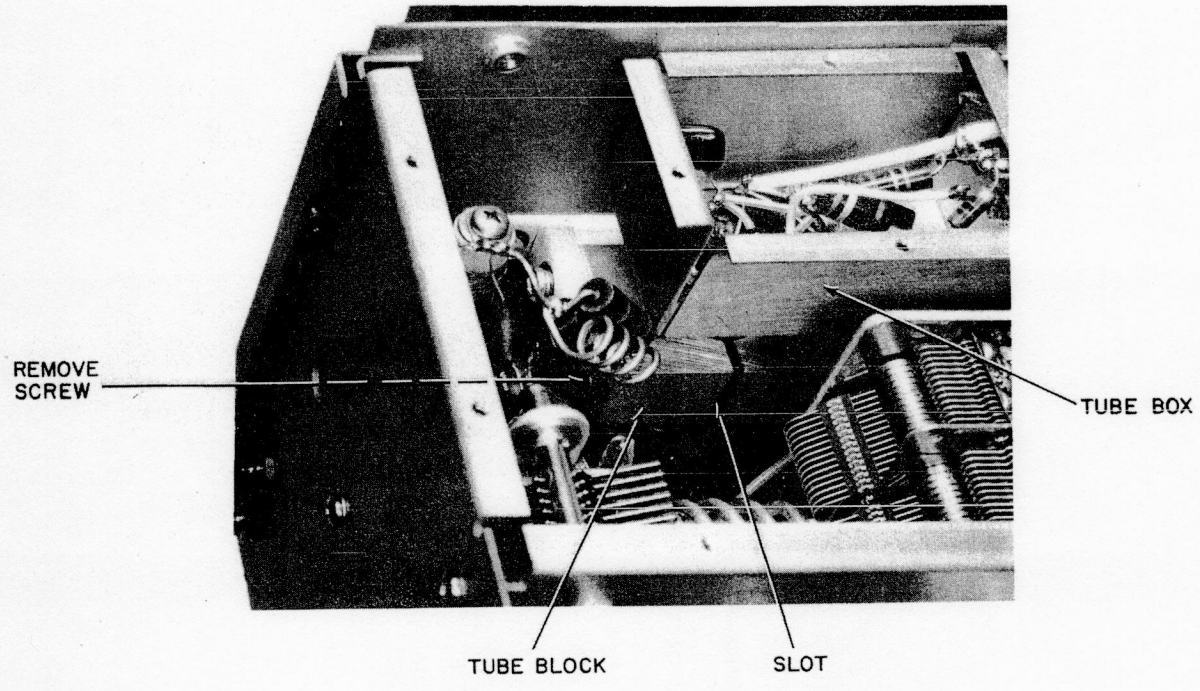

Figure 4-20. Power Amplifier Tube Removal

compound (Dow Corning #340) to increase heat transfer. Replace the heat sink compound when replacing the transistor.

WARNING

Handle silicon heat sink compound with care. Avoid getting the compound in the mouth and eyes. Wash hands thoroughly after use.

The TAB transistors are insulated from the chassis or ground plane by thin mica wafers and teflon washers.

WARNING

Omission of the mica wafer or teflon washer during replacement will cause the transistor to be damaged when the Model CX7 is energized.

c. Diodes. Diodes are heat sensitive. During replacement, use a heat sink as directed in paragraph 4.4.3.a.4.

4.4.4.3 Power Amplifier Tube Replacement.

a. Remove the top cover from the upper PA assembly.

WARNING

Charged capacitors may cause high voltage to exist within the power amplifier assembly, even with the Model CX7 removed from the power source. Momentarily short the tube block (see Figure 4-19) to ground using a metal screwdriver with an insulated handle.

b. Remove the two Phillips-head screws that hold the tube box to the upper PA assembly.

c. Without unsoldering the interconnecting wires that are attached to the tube box, lift the tube box off the base of the power amplifier tube and out of the upper power amplifier assembly.

d. Remove the Allen screw (use 9/64 Allen wrench) in the tube block shown in Figure 4-20.

e. Using a large, flat-bladed screwdriver, gently spread the tube block slot and lift out the power amplifier tube.

NOTE

Prior to replacing the power amplifier tube, apply a new layer of silicon heat sink compound (Dow Corning #340) on portions of the tube that make contact with the tube block.

WARNING

Handle silicon heat sink compound with care, avoid getting the compound with care, avoid getting the compound in the mouth and eyes.

f. To reassemble, first plug the tube into the socket, then spread the tube block while positioning the tube in the tube block. The tube is properly seated in the tube block when the tube box is level and the step (b) mounting holes are aligned.

4.5 TROUBLESHOOTING AIDS

4.5.1 General

Troubleshooting aids consist of information that can be utilized to determine component or lead, contact or terminal identification or otherwise may be helpful to the technician during servicing the Model CX7.

NOTE

Electrical measurements covered herein are not absolute and may vary slightly between Model CX7s.

4.5.2 Location of Modules

Refer to Figures 4-1 and 4-2 for the location of modules and other chassis-mounted components.

4.5.3 Location of Electrical Parts and Terminals on Modules

Refer to Figures 4-3 through 4-15 for the location of electrical parts and terminals on modules. Information in parentheses pertain to the number of the interconnecting wire that connects to the terminal.

4.5.4 Electrical Part Lead or Contact Identification

Refer to Figures 4-23 through 4-28 to determine the location of applicable leads of the various types of transistors, diodes, integrated circuits, tubes, contacts of switches, and potentiometers that are utilized by the Model CX7.

4.5.4.1 Chassis Wiring Color Code. Table 4-1 lists the wire insulation colors that have been designated for DC power, T/R, and R/T distribution.

4.5.5 Signal Tracing and Test Point Information

a. Power Supply. Table 4-2 lists voltages and resistance measurements on input and output connections on the Model CX7 power supply circuit performed under the following conditions:

1. All measurements conducted with a VTVM and unless otherwise noted in the table, switches and controls were positioned as listed in table 2-1.

2. Resistances of less than 0.9 ohm listed as zero.

3. Resistance measurements performed with primary power plug disconnected.

4. When two or more resistances are given for the same pin, the first is valid when the negative ohmmeter lead is connected to the chassis and the second is when the positive ohmmeter lead is connected to the chassis.

WARNING

Positive 1500 volts DC is present on rear power connector J7 and inside on pin 162 of the power supply card. Prior to resistance measurements, discharge these points to chassis ground using an insulated handle screwdriver not sooner than approximately 30 seconds after the transceiver has been turned off.

Insulation Color	Wire Function
Red	+15 VDC
Blue	-15 VDC
Brown	+5 VDC
Orange	+34 VDC
Violet	+300 VDC
Green	T/R command (+0.3 VDC/-13.5 VDC)
Gray	R/T command (+0.3 VDC/-13.5 VDC)

Table 4-1. Chassis Wiring Color Code

Pin	Parameter	Scale	Voltage and Resistance
101	D-C V		+0.4 ±0.2 VDC
	A-C V		
	Ohms	X 1/X 10	5 to 10 Ohms/100 to 200 Ohms
106	D-C V		-13.5 ±0.3 VDC
	A-C V		
	Ohms	X 1/X 10	5 to 10 Ohms/100 to 250 Ohms
111	D-C V		+15.0 ±0.20 VDC
	A-C V		Less than 50 MVPP ripple*
	Ohms	X 1/X 10	20 to 40 Ohms/15 to 35 Ohms
116	D-C V		
	A-C V		Less than 50 MVPP ripple*
	Ohms	X 1/X 10	Greater than 1K/Greater than 1.5K
117	D-C V		-50 to -60 VDC
	A-C V		
	Ohms	X 1/X 10	Greater than 60 Ohms/Greater than 6K
118	D-C V		-15.0 VDC (can be adjusted by R-16)
	A-C V		
	Ohms	X 1	20 to 30 Ohms
132	D-C V		+340 ±0.5 VDC
	A-C V		Less than 50 MVPP ripple*
	Ohms	X 10	200 to 600 Ohms/50 to 400 Ohms
152	D-C V		+310 ±20 VDC
	A-C V		
	Ohms	X 1K	Greater than 10K/Greater than 6K

*Measured with calibrated oscilloscope.

Table 4-2. Power Supply Voltage and Resistance Measurements (Sheet 1 of 3)

Pin	Parameter	Scale	Voltage and Resistance
162	D-C V		High Voltage - See J7 last test in table
	A-C V		
	Ohms	X 1/X 10	Greater than 350K**/Greater than 350K**
124	D-C V		+22.5 ±1.5 VDC
	A-C V		Less than 50 MVPP ripple
	Ohms	X 1	Greater than 100K/--
The following transistors are located on the rear panel			
Q1	D-C V		
Case	A-C V		
	Ohms	X 10	Greater than 100K/--
Q2	D-C V		
Case	A-C V		
	Ohms	X 10	---/Greater than 100K
Q3	D-C V		
Case	A-C V		
	Ohms	X 10	Greater than 100K/---
Q4	D-C V		
Case	A-C V		
	Ohms	X 10	Greater than 100K/---
136	D-C V		+5.0 ±0.4 VDC
	A-C V		Less than 50 MVPP ripple
	Ohms		
**See warning note - measured after ohmmeter charged capacitor.			

Table 4-2. Power Supply Voltage and Resistance Measurements (Sheet 2 of 3)

Pin	Parameter	Scale	Voltage and Resistance
For the following, depress the CONTROL-TUNE pushbutton			
101	D-C V		-13.5 ±0.3 VDC
106	D-C V		0.4 ±0.2 VDC
J7***	D-C V		1500 to 1600 VDC
***Located on rear panel marked "H.V."			

Table 4-2. Power Supply Voltage and Resistance Measurements (Sheet 3 of 3)

b. Transmit/Receive Mode Keyline Measurements. Table 4-3 lists the measurement points and the required voltage for transmit or receive mode enabling. If desired, these checks can be conducted concurrently with receiver or transmitter signal tracing. Refer to the applicable Figures 4-3 through 4-10 for the location of pins. Measurements were performed using a voltmeter. All values are nominal and may vary ±20% without degrading performance.

c. Transmitter Signal Tracing. Table 4-4 lists connection points and signal levels. Refer to the applicable Figures 4-3 through 4-13 for location of specified measurement points. All measurements were performed with the "MODE" switch set to the "USB" position, using an X10 probe with a Tektronix type 453 oscilloscope (50 MHz response).

d. Receiver Signal Tracing. Table 4-5 lists connection points and normal signal levels. Refer to the applicable Figures 4-3 through 4-13 for location of specified measurement points. A 14.2 MHz signal is applied to the antenna connector. The signal must be properly tuned-in and the "PRESELECTOR" peaked for each measurement.

Measurement Point	Voltage	
	Receive	Transmit
The following measurement points are located on the Power Supply board		
Pins 101 thru 105	+0.3 VDC	-13.5 VDC
Pins 106 thru 110, 116	-13.5 VDC	+0.3 VDC
The following measurement point is located on the BFO board		
Pin 213	-13.5 VDC	+0.3 VDC
The following measurement points are located on the IF board		
Pin 416	-13.5 VDC	+0.3 VDC
Pin 449	+0.3 VDC	-13.5 VDC
Pin 432	+0.3 VDC	-13.5 VDC
Pin 466	-13.5 VDC	+0.3 VDC
The following measurement points are located on the Front End board		
Pin 65	+0.3 VDC	-13.5 VDC
Pin 67	-13.5 VDC	+0.3 VDC
The following measurement point is located on the Power Amplifier assembly		
Pin 2	+34 VDC	-11 VDC
The following measurement points are located on the AGC Detector board		
Pin 491	-13.5 VDC	+0.3 VDC
Pin 508	+0.3 VDC	-13.5 VDC
The following measurement points are located on the Audio board		
Pin 326	-13.5 VDC	+0.3 VDC
Pin 327	+0.3 VDC	-13.5 VDC

Table 4-3. Transmit/Receive Keyline Measurements

Measurement Point	Frequency	Output Level With Drive
The following signal application and measurement points are located on the Audio board:		
Apply a 1 kHz signal at 100 MVP-P to Pin 301.		
Q1 Gate	1 kHz	100 MVP-P
Q1 Drain	1 kHz	600 MVP-P
Q2 Base (See NOTE 1.)	1 kHz	Depends on setting of R12
Q2 Collector	1 kHz	300 MVP-P
Q3 Base	1 kHz	300 MVP-P
Q3 Emitter	1 kHz	300 MVP-P
Pin 330	1 kHz	300 MVP-P
The following measurement points are located on the AGC Detector board.		
Pin 501	1 kHz	300 MVP-P
Pin 500	8.8 MHz	2 VP-P
The following measurement points are located on the IF board.		
Pin 435	8.8 MHz DSB	400 MVP-P
Q14 Gate 1 (See NOTE 2.)	8.8 MHz DSB	200 MVP-P
Q14 Drain	8.8 MHz DSB	60 MVP-P
Q11 Gate 1	8.8 MHz DSB	50 MVP-P
Q11 Drain	8.8 MHz DSB	500 MVP-P
IC 3 Pin 2	8.8 MHz SSB	30 MVP-P
IC 3 Pin 6	8.8 MHz SSB	1.0 VP-P
Pin 459	8.8 MHz SSB	150 MVP-P
Pin 453	8.8 MHz SSB	150 MVP-P
Q8 Gate 1	8.8 MHz SSB	150 MVP-P
Q8 Drain	39.5 MHz SSB	300 MVP-P
Pin 421	39.5 MHz SSB	50 MVP-P

NOTES: 1. Adjust R12 for 300 MVP-P at Audio board Pin 330.
2. Adjust "CLIPPING" control for 1 VP-P at IF board integrated circuit IC3 Pin 6.

Table 4-4. Transmitter Signal Levels (Sheet 1 of 2)

Measurement Point	Frequency	Output Level With Drive
The following measurement points are located on the Front End board.		
Pin 68	39.5 MHz	40 MVP-P
Q4 Gate 1	39.5 MHz	40 MVP-P
Q4 Drain	39.5 MHz	200 MVP-P
IC1 Pin 1	39.5 MHz	50 MVP-P
IC1 Pin 2	54.0 MHz	500 MVP-P
IC1 Pin 6	14.150 MHz	1 VP-P
Q5 Base	14.150 MHz	500 MVP-P
Q5 Emitter	14.150 MHz	500 MVP-P
Pin 59	14.150 MHz	500 MVP-P
The following measurement points are located on the RF Driver board.		
Pin 267 (See NOTE 3.)	14.150 MHz	180 MVP-P
IC1 Pin 2 (See NOTE 4.)	14.150 MHz	180 MVP-P
IC1 Pin 6	14.150 MHz	600 MVP-P
IC1 Pin 5	D-C V	(See NOTE 5.)
Q1 Gate	14.150 MHz	700 MVP-P
Q1 Drain	14.150 MHz	1.5 VP-P
Q2 Base	14.150 MHz	600 MVP-P
Q2 Collector	14.150 MHz	1.5 VP-P
Q3 Base	14.150 MHz	600 MVP-P
Q3 Collector	14.150 MHz	15 VP-P
Q4 Base	14.150 MHz	8 VP-P
Pin 269	14.150 MHz	40 VP-P
The following measurement points are located on the Power Amplifier Assembly.		
Pin 11	14.150 MHz	50 VP-P
V1 Pin 3	14.150 MHz	50 VP-P

NOTES:
3. Set the "OUTPUT" control to the midrange position.
4. On the RF Driver board, adjust the ALC control for 600 MVP-P at the base of Q2 with the +34 VDC line disconnected. All measurements up to the base of Q2 are performed with the +34 VDC line disconnected.
5. This measurement point is ALC voltage. It must be within ±100 MVP-P of the voltage present at IC1 Pin 1.

Table 4-4. Transmitter Signal Levels (Sheet 2 of 2)

RF Input Level at Antenna	Measurement Point	Frequency	Output Level With Signal
The following measurement points are located on the Front End board.			
30 MVP-P	Pin 76 (See NOTE 1.)	14.2 MHz	30 MVP-P
30 MVP-P	Q1 Gate 1 (See NOTE 1.)	14.2 MHz	90 MVP-P
30 MVP-P	Q1 Drain (See NOTE 1.)	14.2 MHz	200 MVP-P
30 MVP-P	Q2 Gate 1 (See NOTE 1.)	14.2 MHz	200 MVP-P
30 MVP-P	Q2 Gate 2	54.0 MHz	1.5 VP-P
30 MVP-P	Q2 Drain	39.5 MHz	250 MVP-P
30 MVP-P	Q3 Gate 1	39.5 MHz	250 MVP-P
30 MVP-P	Q3 Drain	39.5 MHz	800 MVP-P
30 MVP-P	Pin 68	39.5 MHz	800 MVP-P
The following measurement points are located on the IF board.			
30 MVP-P	Pin 42	39.5 MHz	800 MVP-P
30 MVP-P	Q10 Gate 1	39.5 MHz	800 MVP-P
30 MVP-P	Q10 Drain	8.8 MHz	1000 MVP-P
1 MV	Q11 Gate 1	8.8 MHz	120 MVP-P
100 UV	Q11 Drain	8.8 MHz	150 MVP-P
100 UV	IC3 Pin 2	8.8 MHz	50 MVP-P
100 UV	IC3 Pin 6	8.8 MHz	600 MVP-P
100 UV	IC4 Pin 2	8.8 MHz	100 MVP-P
100 UV	IC4 Pin 6	8.8 MHz	200 MVP-P
1 UV	Q16 Base	8.8 MHz	100 MVP-P
1 UV	Q16 Emitter	8.8 MHz	100 MVP-P
1 UV	Pin 465	8.8 MHz	100 MVP-P

NOTE: 1. Measured with Front End board wire number 14 disconnected.

Table 4-5. Receiver Signal Levels (Sheet 1 of 2)

RF Input Level at Antenna	Measurement Point	Frequency	Output Level With Signal
The following measurement points are located on the AGC Detector board.			
1 UV	Pin 493	8.8 MHz	100 MVP-P
1 UV	IC1 Pin 2	8.8 MHz	100 MVP-P
1 UV	IC1 Pin 6	8.8 MHz	1 VP-P
1 UV	Q6 Gate 1	8.8 MHz	200 MVP-P
1 UV	Q6 Drain	Audio	400 MVP-P
1 UV	Pin 485	Audio	400 MVP-P
The following measurement points are located on the Audio board.			
1 UV	Pin 308 (See NOTE 2.)	Audio	400 MVP-P
1 UV	Q9 Gate	Audio	150 MVP-P
1 UV	Q9 Drain	Audio	800 MVP-P
1 UV	Q18 Drain	Audio	800 MVP-P
1 UV	Q18 Source	Audio	800 MVP-P
1 UV	Q19 Gate	Audio	800 MVP-P
1 UV	Q19 Drain	Audio	6 VP-P
1 UV	Pin 313	Audio	6 VP-P
The following measurement points are located on the Power Supply board.			
1 UV	Pin 125	Audio	6 VP-P
1 UV	IC1 Pin 14	Audio	1.5 VP-P
1 UV	IC1 Pin 7	Audio	20 VP-P
1 UV	Pin 130	Audio	20 VP-P
The following measurement point is located on the rear panel.			
1 UV	J3	Audio	5 VP-P

NOTE: 2. Set the "AF-GAIN" control to the "10" position.

Table 4-5. Receiver Signal Levels (Sheet 2 of 2)

4.6 STRAPPING OPTIONS FOR 115/230 VAC OPERATION

4.6.1 115 Vac Operation

The strapping option connections for 115 VAC operation is shown in Figure 4-21. Two separate jumper wires must be connected. Connect one jumper wire between Power Supply board input pins 166 and 164. Connect the other jumper wire between Power Supply board input pins 163 and 165.

4.6.2 230 Vac Operation

Only one jumper wire is utilized for 230 VAC operation. The jumper wires shown in Figure 4-21 must be removed and Power Supply board input pins 163 and 164 must be connected by a jumper wire.

4.7 OPTIONAL FILTER AND CRYSTAL INSTALLATION

4.7.1 Optional Filters

Two filter brackets are provided for the installation of optional filters. The filter brackets located on the IF board, are shown in Figure 4-22. The applicable "MODE" switch position and filter location is listed in Table 4-6.

The filters may be installed using the following procedure.

a. If necessary, trim the filter leads so that the lead length is 3/16 inch.

b. Remove the hardware from the filter bracket holes that accept the applicable filter mounting studs. Save the nuts and washers for use in the following steps.

c. Prior to plugging the filter into the bracket, place flat washers over each plug-in lead. The inside of the washers must not be permitted to touch the lead or the glass seal at the base of the lead. This prevents damage to the glass seal when the filter is being secured to the bracket.

d. Insert the filter into the applicable filter bracket.

e. Place the ground lugs over the mounting studs and tighten nuts.

f. Perform the installation checkout given in paragraph 5.4.1 of Section V.

4.7.2 Optional Crystals

a. Install the applicable crystal listed in table 4-7 in the applicable Front End board socket shown in Figure 4-23.

b. Perform the installation checkout given in paragraph 5.4.2 of Section V.

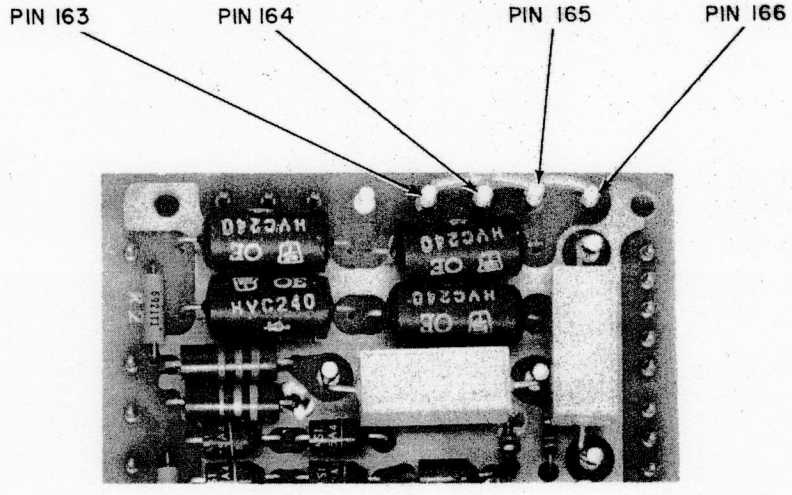

Figure 4-21. Strapping Option Pins Located on Power Supply Board

Filter	Part No.	"MODE" Switch Position	Location
Deluxe CW*	08-S0007-001	CW2	Above FL3 (I.F.BD.)
Standard CW*	08-S0004-001	CW2	Above FL3 (I.F.BD.)
FSK	08-S0006-001	FSK, CW3	Above FL1 (I.F.BD.)
*If both of these filters are required, install the standard filter (08-S0004-001) above FL1 (I.F.BD.). "MODE" switch position for this filter is now CW3, and FSK.			

Table 4-6. Optional Filters

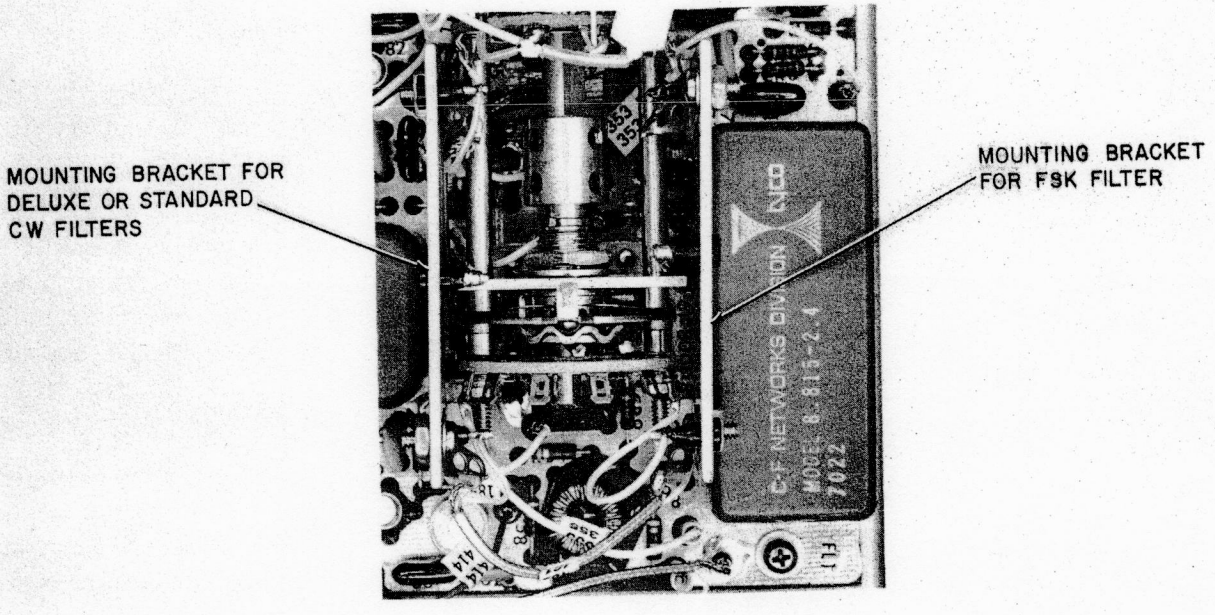

Figure 4-22. Installation Location for Optional Filters

Crystal Frequency (MHz)	Crystal Socket	Bandswitch Position	Operating Frequency (MHz)
42.0	YSA	A	2 - 3
44.0	YSB	B	4 - 5
45.0	YSB	B	5 - 6
46.0	YSB	B	6 - 7
48.0	YSC	C	8 - 9
49.0	YSC	C	9 - 10
50.0	YSC	C	10 - 11
51.0	YSC	C	11 - 12
52.0	YSC	C	12 - 13
53.0	YSC	C	13 - 14

Table 4-7. Optional Crystal Installation

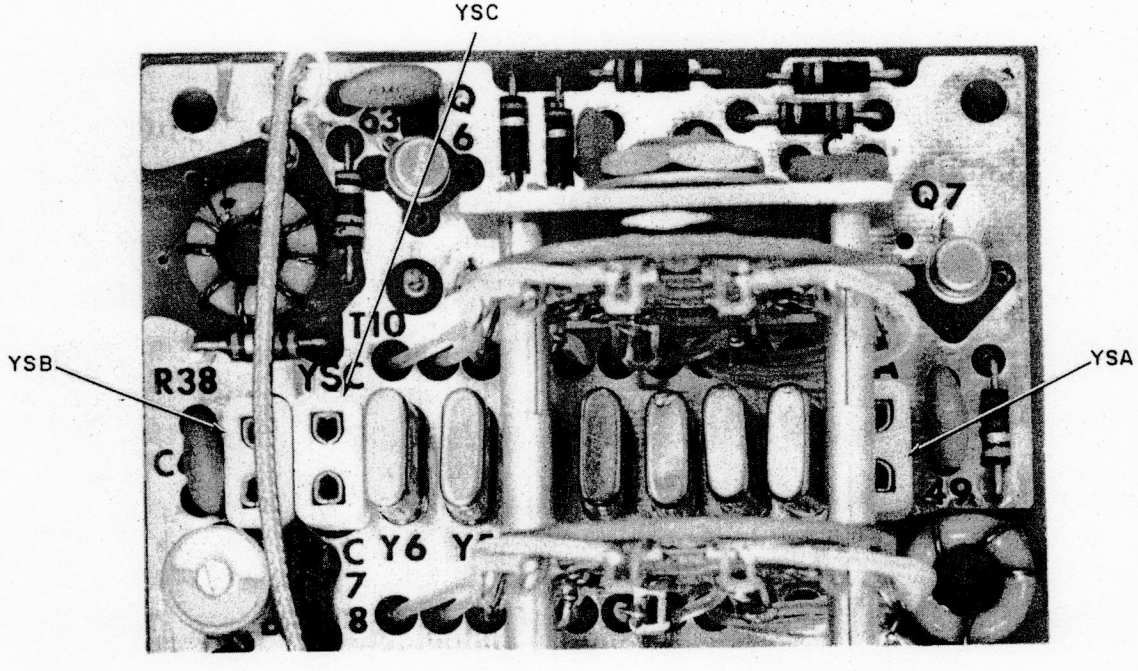

Figure 4-23. Location of Sockets for Optional Crystals

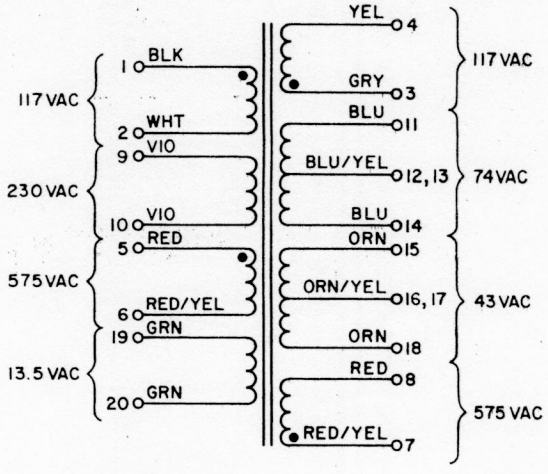

Figure 4-24. Power Transformer Lead Identification

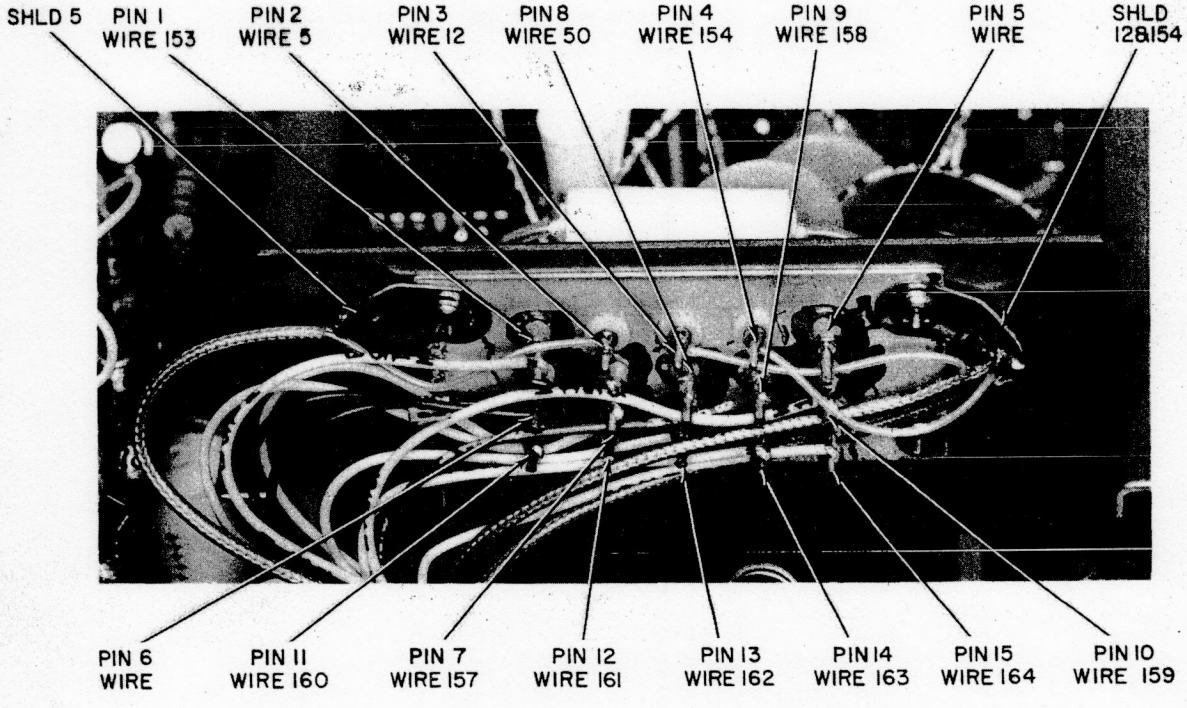

Figure 4-25. Location of Counter Assembly Terminals

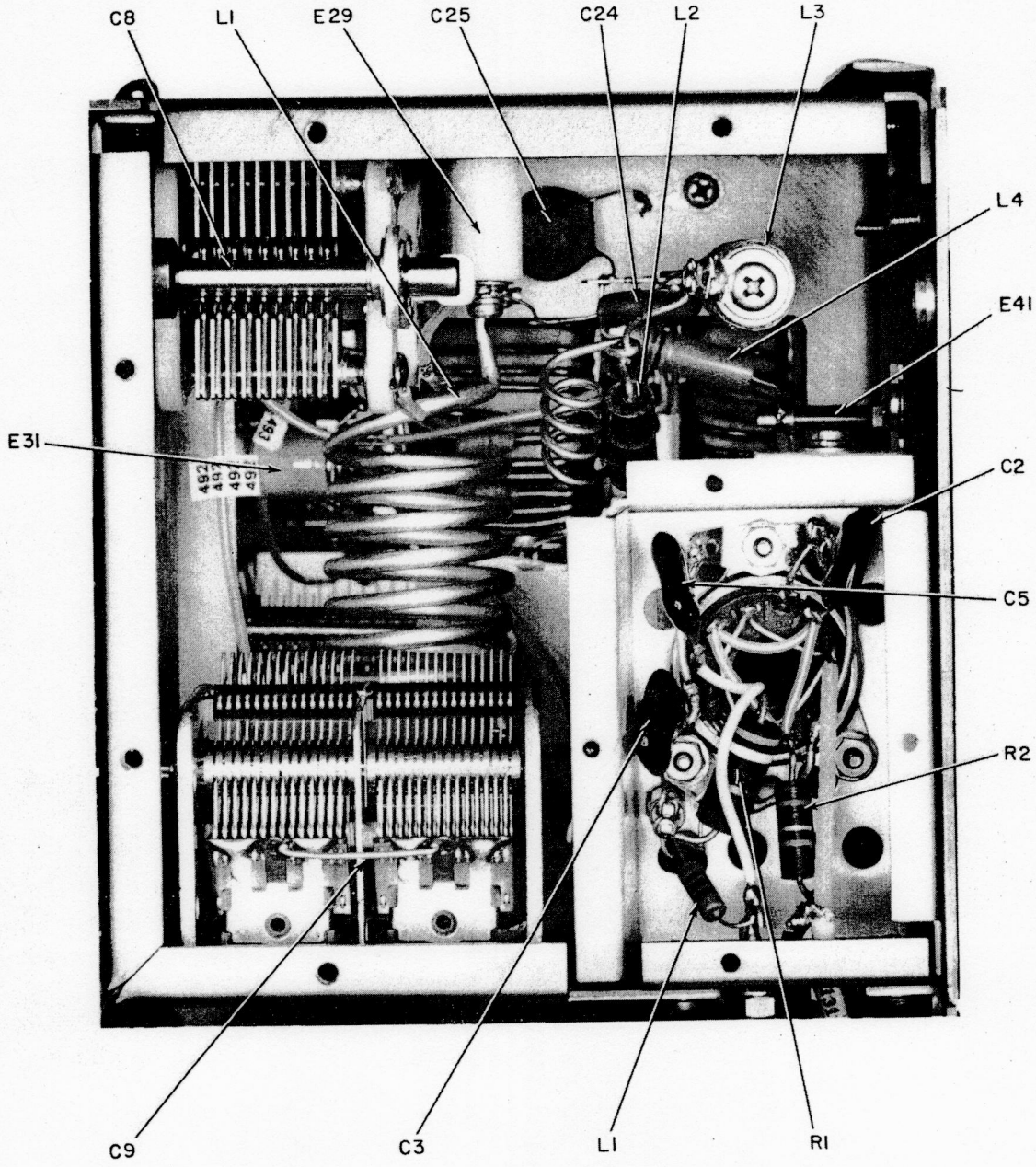

Figure 4-26. Location of Parts in Upper PA Assembly

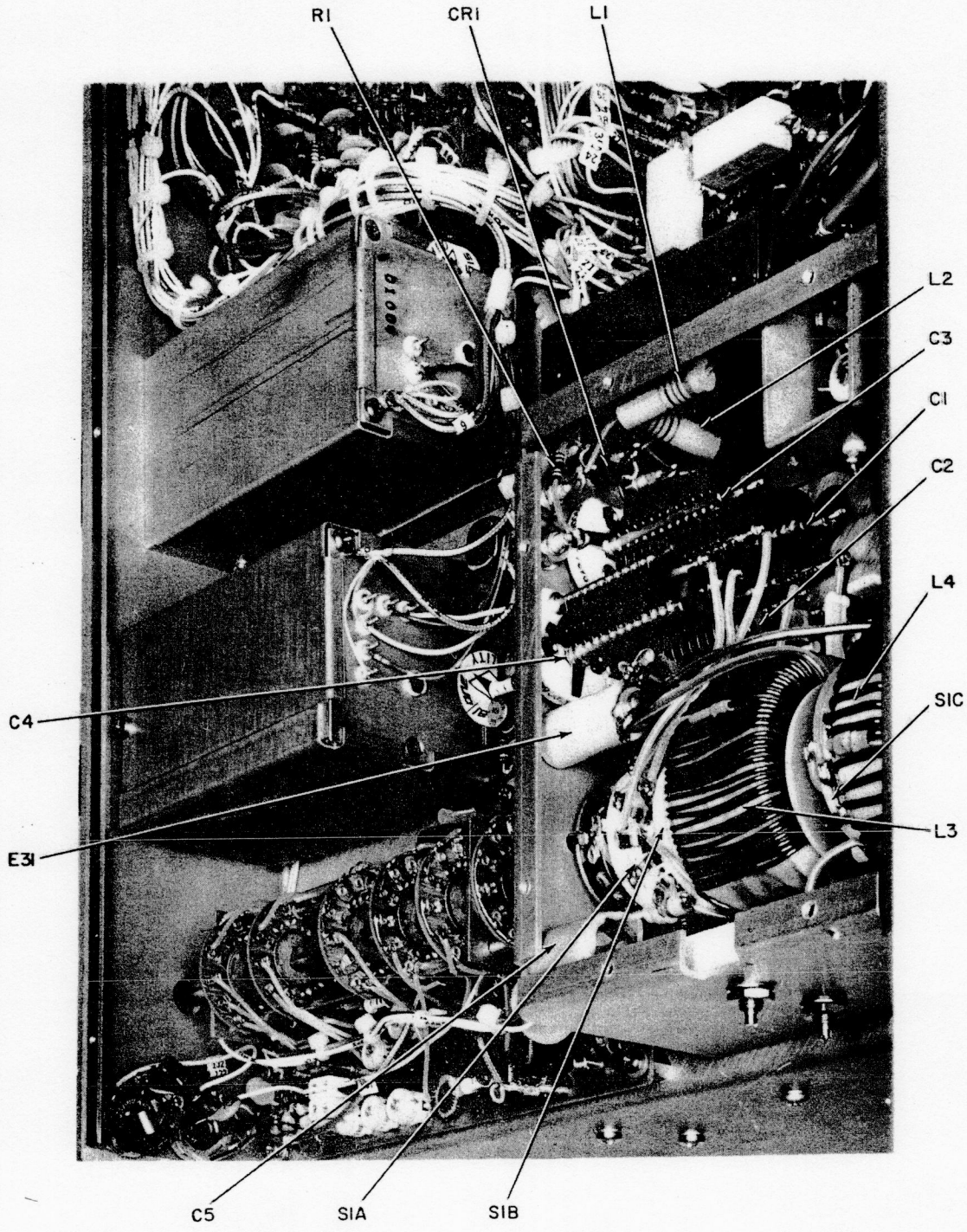

Figure 4-27. Location of Parts in Lower PA Assembly

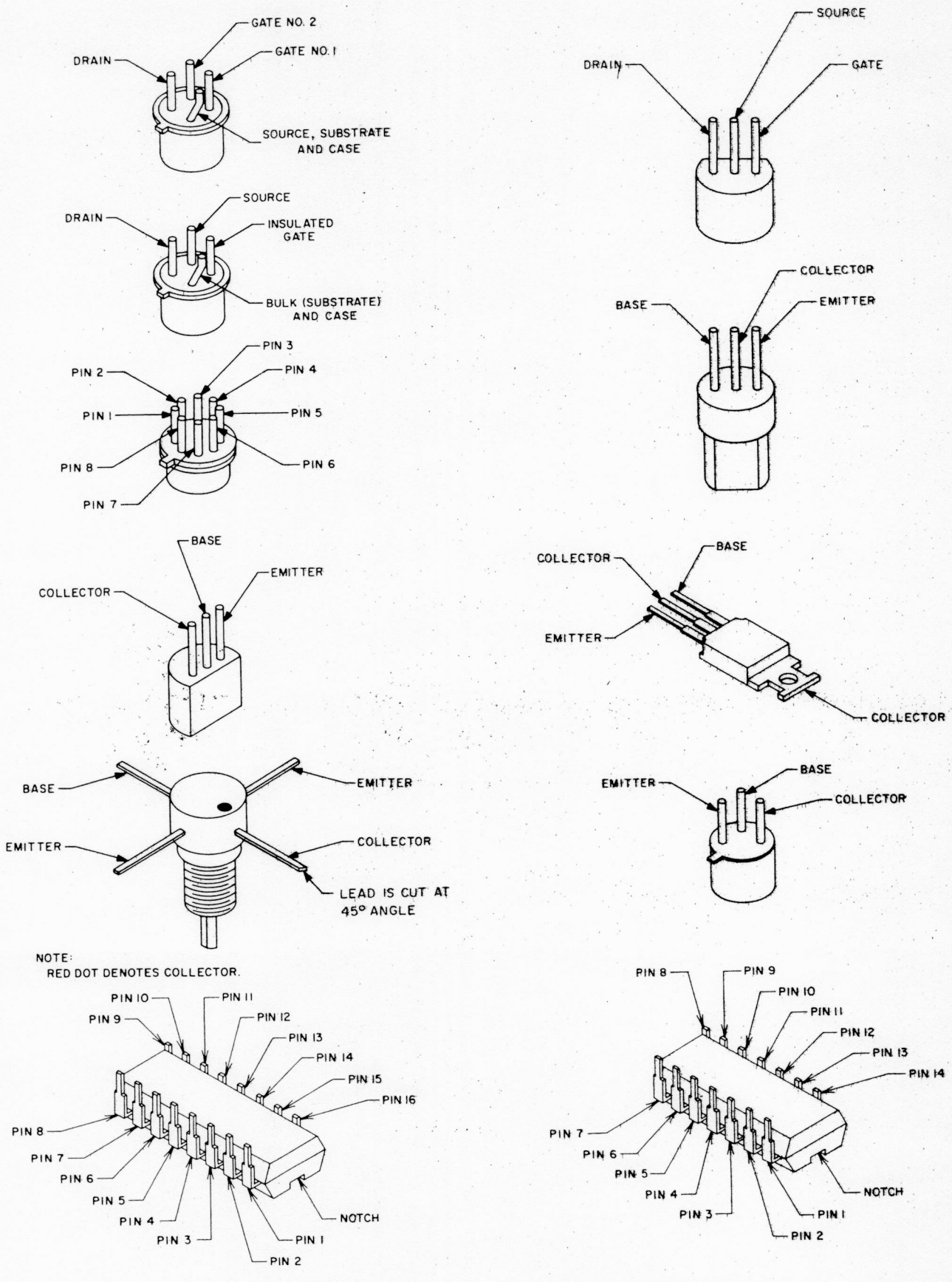

Figure 4-28. Electrode Configuration for Semiconductor Devices

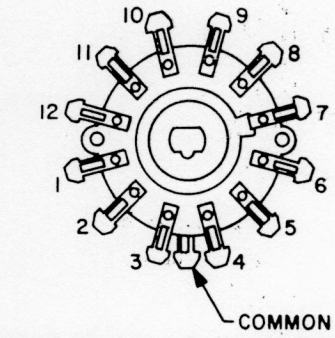

WAFERS A&C SIMILAR EXCEPT
WAFER C ROTATED 180°
REAR VIEW

Switch A2S1

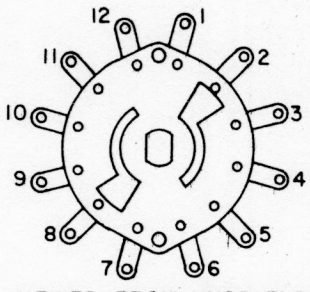

VIEWED FROM KNOB END

Switch S6

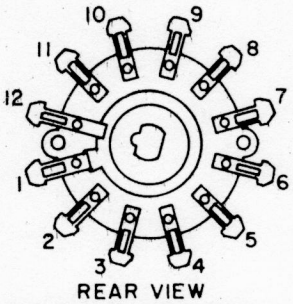

REAR VIEW
WAFER D ROTATED 180°

Switch S7

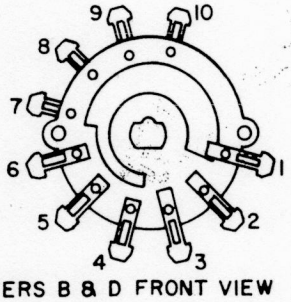

WAFERS B & D FRONT VIEW

Switch A2S1

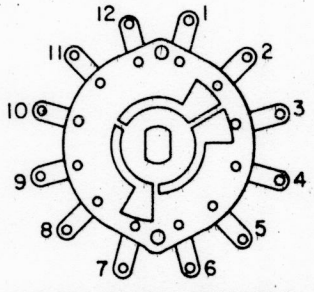

VIEWED FROM KNOB END

Switch S5

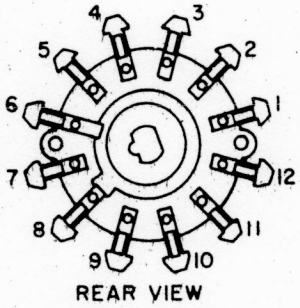

REAR VIEW

Switch S8

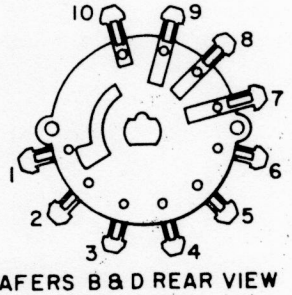

WAFERS B & D REAR VIEW

Switch A2S1

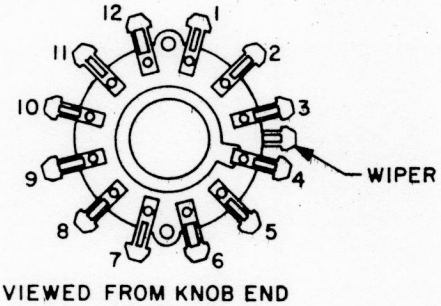

VIEWED FROM KNOB END

Switch A1S1

Figure 4-29. Switch Contact Identification

SECTION V

PERFORMANCE CHECK AND ALIGNMENT

5.1. GENERAL

This section consists of simple performance checks for the receive and transmit circuits. Also included in this section are alignment instructions for all the internal potentiometers, variable capacitors, and transformers.

CAUTION

Unless otherwise specified herein, all the performance checks and alignments are to be performed with a dummy load connected to the Model CX7.

5.2 PERFORMANCE CHECK

5.2.1 Transmitter. A check on the operation of the transmitter circuitry can be achieved by performing the transmit mode operating procedures covered in paragraphs 2.4 through 2.4.6 of Section II to the desired extent, in all applicable modes, and in all applicable bands while observing for satisfactory operational characteristics.

5.2.2 Receiver. A check on the operation of the receiver circuitry can be achieved in a similar manner, as the transmitter performance check, by performing the operating procedure covered in paragraphs 2.3 through 2.3.4.2 of Section II and and then conducting the following sensitivity and audio gain check.

a. Sensitivity Check

1. Tune the Model CX7 to 29,500.0 kHz. Set "RF GAIN" to "10" and "AF GAIN" to "5."

2. Connect an AC VTVM across the speaker terminals.

WARNING

Do not key the transmitter with the signal generator connected to the antenna.

3. Tune an RF signal generator to 29.5 MHz, adjust its output for 3 microvolts, and apply this signal to the Model CX7 antenna connector. Fine tune the RF signal generator for a peak "S" meter indication on the Model CX7. Adjust the Model CX7 "PRESELECTOR" for a peak "S" meter indication.

4. Note the indication on the AC VTVM. (The Model CX7 "AF GAIN" control may be adjusted to produce an even increment indication on the AC VTVM for a reference point.)

5. Tune the RF signal generator off-frequency and note the indication on the AC VTVM.

6. Note that the difference in audio level indications in steps 4 and 5 is a minimum of 10 DB.

7. Repeat steps 3 through 6 with the RF signal generator output adjusted for 0.3 microvolts.

8. Repeat previous steps 2 through 6 for the following input frequencies and RF signal generator output level. Confirm a minimum audio level increase of 10 DB for each.

Input Frequency (MHz)	RF Signal Generator Output Level (Microvolts)
28.5	0.3
21.3	0.3
14.2	0.3
7.2	1.0
3.8	1.0
1.9	1.0

9. Remove the signal generator from the antenna and reconnect the dummy load.

b. Audio Gain Check

1. Pull out the "PULL-TO-CALIBRATE" control.

2. Tune the applicable "VFO" control until a strong audio signal from the calibrator is monitored.

3. Substitute a 4.7-ohm, 2-watt resistor in place of the speaker or headphone.

4. Increase the settings of the "RF GAIN" and "AF GAIN" controls to the maximum positions.

5. Measure the AC voltage drop across the resistor and confirm that it is a minimum of 1.7 VRMS. (Sidetone audio gain may be checked in a similar manner, but with the "CALIBRATOR" off, by keying the transmitter with the telegraph key and advancing the rear panel "SIDETONE" control to the maximum position.)

6. Return the "RF GAIN," "AF GAIN," and "PULL-TO-CALIBRATE" controls to their original positions and remove the 4.7-ohm resistor.

5.3 ALIGNMENT PROCEDURES

Alignment procedures are divided into two groups as determined by the nature of the adjustments. Those adjustments that are classified as touch-up are covered in paragraph 5.3.1. Capacitors, resistors, inductors, and transformer adjustments that are touched-up should not be varied more than a few degrees in either direction of their original setting. If the adjustments require varying by an appreciable amount, check for the presence of a defect other than alignment. Adjustments that require exact frequency settings, with the aid of an external electronic counter, and bandpass alignments are covered in paragraph 5.3.2. In order to gain access to some of the adjustments, the AGC Detector board and Audio board will have to be physically repositioned (being careful to avoid shorts) without removing any of the electrical interconnections.

5.3.1 Touch-Up Adjustments

NOTE

The adjustments in paragraphs 5.3.1 a. through h. are performed with the Model CX7 in the receive mode.

a. -15 Vdc Regulator

1. With a VTVM connected to Power Supply board pin 118 (see Figure 5-1), adjust Power Supply board resistor R16 (see Figure 5-1) for an indication of exactly -15.0 VDC. When the

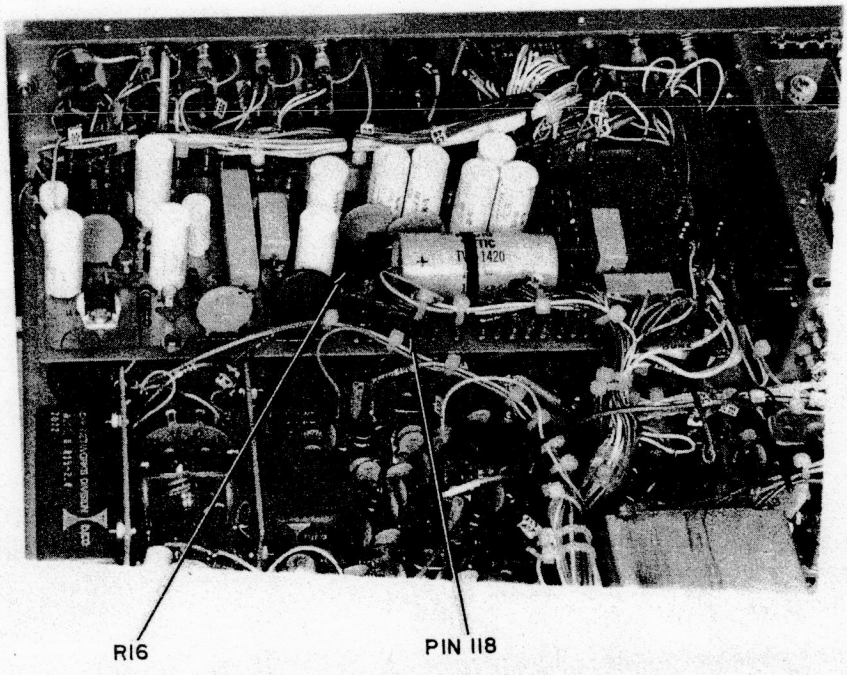

Figure 5-1. Location of R16 on Power Supply Board

-15 VDC regulator is properly adjusted all other regulator voltages will lie in the following range:

+5 VDC	±0.40 VDC
+15 VDC	±0.20 VDC
+34 VDC	±0.50 VDC
+22.5 VDC	±1.50 VDC

b. 100 kHz Oscillator Calibration

1. Set the "MHZ" band selector to the "14" position.

2. Set the "MODE" selector to the "USB" position.

3. Adjust the "IF SHIFT" control to the "-1.5" position.

4. Tune the applicable "VFO A" or "VFO B" control until WWV is monitored on the high end of the band. WWV is at 15.00 MHz, however the CX7 counter may not indicate exactly ".000.0" until calibration has been completed.

5. Pull out the "PULL-TO-CALIBRATE" control. (Do not rotate.)

6. Adjust AGC Detector board capacitor C30 (see Figure 5-2) for a zero beat between the 100 kHz oscillator output and the carrier of WWV. If the "KHZ" frequency display does not indicate ".000.0," proceed with paragraph 5.3.1.c.

c. 43.1 MHz Oscillator Calibration

1. Check that the "MODE" selector is set to the "USB" position.

2. Check that the "IF SHIFT" is set to the "-1.5" position.

3. Check that the "PULL-TO-CALIBRATE" control is in the "OUT" position. (Do not rotate.)

4. Tune the applicable "VFO A" or "VFO B" control for a "000.0" "KHZ" display and confirm that a zero beat between the VFO and the 100 kHz oscillator can be obtained for the 1, 3, 7, 14, 21, 28, and 29" band switch positions.

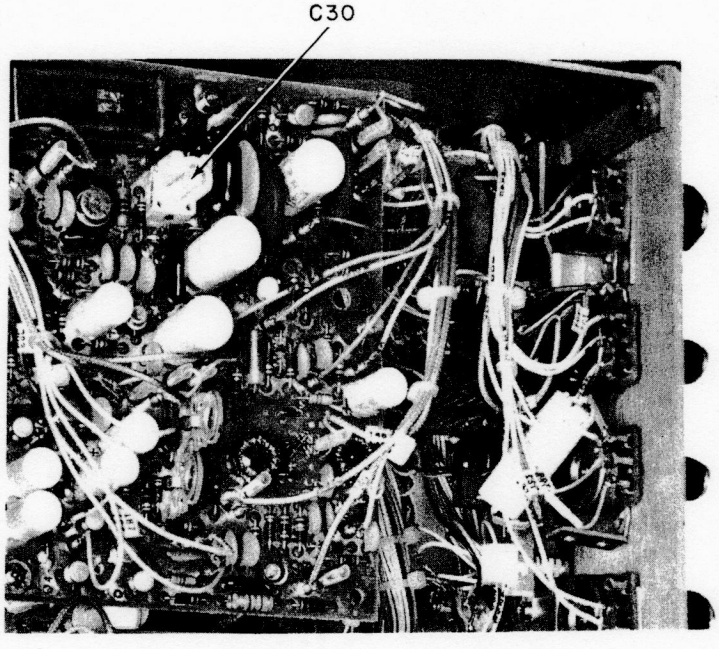

Figure 5-2. Location of C30 on AGC Detector Board

NOTE

If the majority of the bands can be calibrated, then the appropriate trimmer must be adjusted on the Front End board. If not, then capacitor C31 on the BFO board must be adjusted in accordance with step 5. Under rare circumstances, both BFO board capacitor C31 and also the Front End board trimmers may have to be adjusted.

5. Slightly adjust capacitor C31 (see Figure 5-3(a)) on the BFO board, as necessary, but not more than a few degrees in either direction. (Do not remove BFO cover to adjust C31. The AGC Detector and Audio boards will have to be positioned to gain access to C31.) Note: If any channels are still out of calibration, their applicable Front End board oscillator trimmer may have to be slightly adjusted.

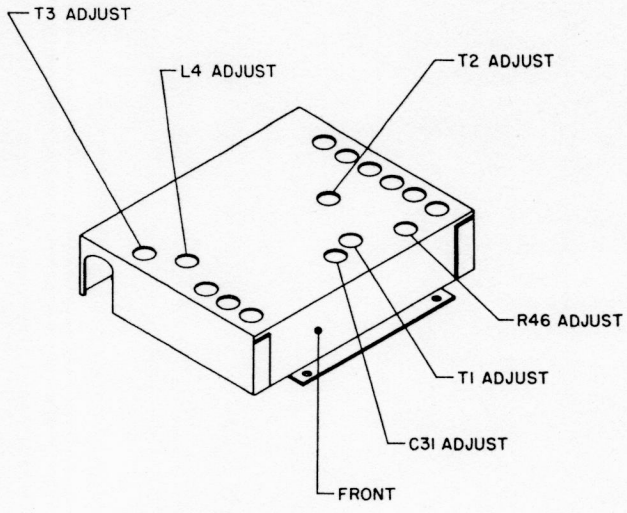

Figure 5-3(a). BFO Cover

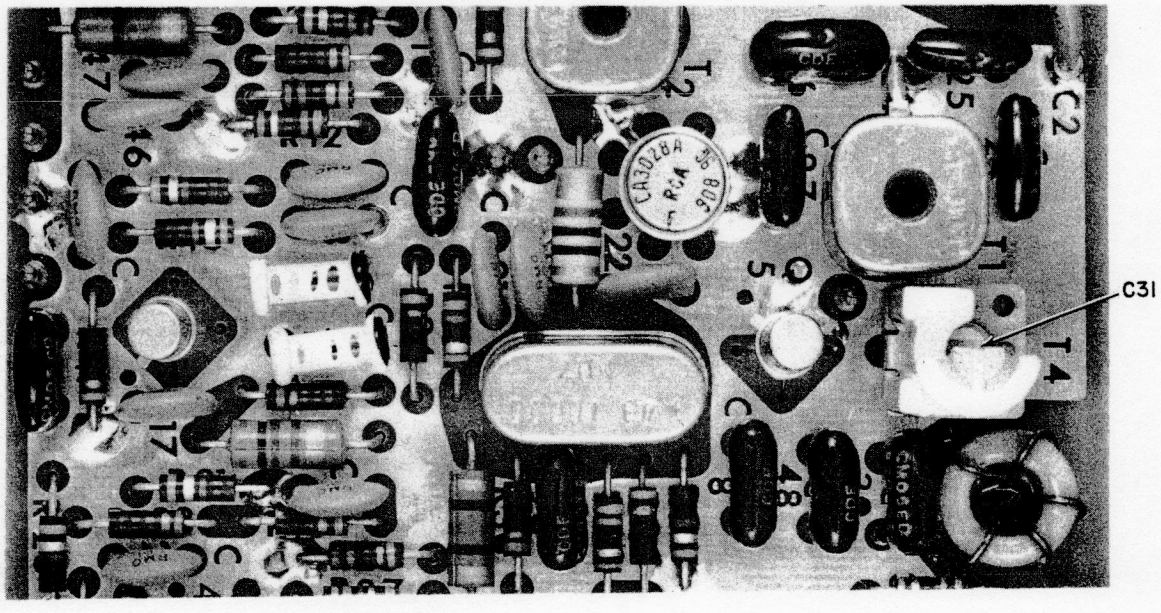

Figure 5-3(b). Location of C31 with BFO Cover Removed

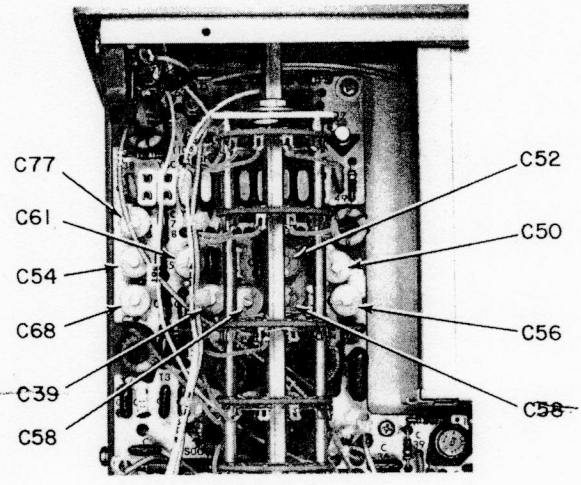

Figure 5-4. Location of Front End Board Trimmers

d. Front End Oscillator Calibration

1. Perform the touch-up adjustments covered in 5.3.1.a., b., and c. (Omit if just previously accomplished.)

2. Set the "MHZ" band switch to the position that is still out of calibration and slightly adjust the applicable trimmer (see Figure 5-4) for a zero beat.

Band Switch Position	Trimmer
1	C50
A	C56
3	C52
B	C68
7	C54
C	C77
14	C61
21	C59
28	C58
29	C57

3. If a trimmer is adjusted, check that the RF output level at the Front End board pin 71 is between 400 and 700 MVRMS. (Use an RF voltmeter.)

e. Offset 34.2 MHz Oscillator Calibration

NOTE

The offset 34.2 MHz oscillator calibration does not have to be performed if a zero beat between VFO A and offset VFO A can be achieved with the "TRANSMITTER OFFSET" control set to within ±30° of midrange. The zero beat is between the offset 34.2 MHz oscillator and the normal 34.2 MHz source. The offset oscillator is adjusted while in the receive mode. (Do not key the transmitter.) The AGC Detector and Audio boards will have to be positioned to gain access to the BFO board adjustments.

1. Perform the touch-up adjustments covered in paragraph 5.3.1.a., b., c., and d. using receive channel A. (Omit if just previously accomplished.)

2. Tune "VFO A" for a "500.0" "KHZ" display.

3. Depress the transmit VFO "A/T.O." switch to the latched-in position.

NOTE

The adjustments in steps 4 through 7 are performed with the "SPOT" pushbutton depressed and held-in.

4. Position the "SPOT LEVEL" control for a comfortable audio level while positioning the "TRANSMITTER OFFSET" control for a strong low frequency tone.

5. Adjust inductor L4 (see Figure 5-5b) and transformer T3, both on the BFO board, for a peak audio level (or 200 MVRMS or more at IF board pin 405 (see Figure 5-5a) as measured with an RF voltmeter.)

6. Position the "TRANSMITTER OFFSET" control for a zero beat between VFO A and the offset VFO. If the zero beat occurred at a setting greater than ±30° from midrange, proceed to step 7.

7. Position the "TRANSMITTER OFFSET" control to midrange and adjust BFO board resistor R43 (see Figure 5-5b) for a zero beat. If necessary, repeat steps 5 through 7.

NOTES

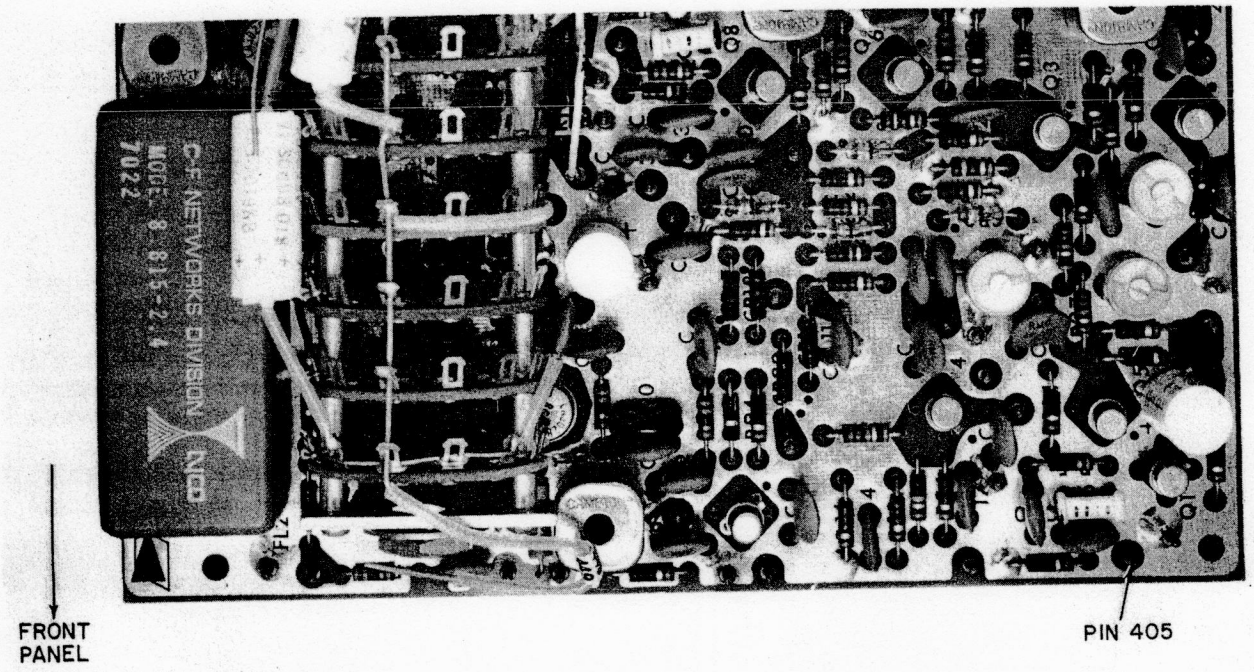

Figure 5-5(a). Location of Pin 405 on IF Board

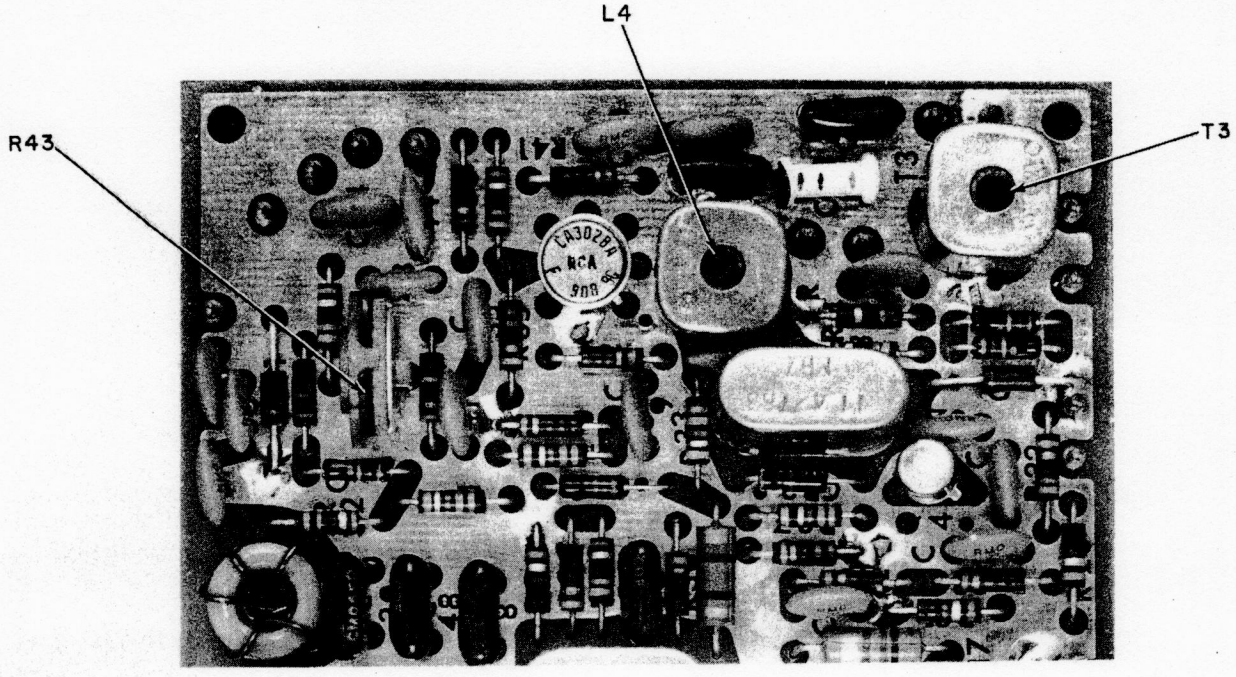

Figure 5-5(b). Location of L4, T3, and R43 on BFO Board

NOTES

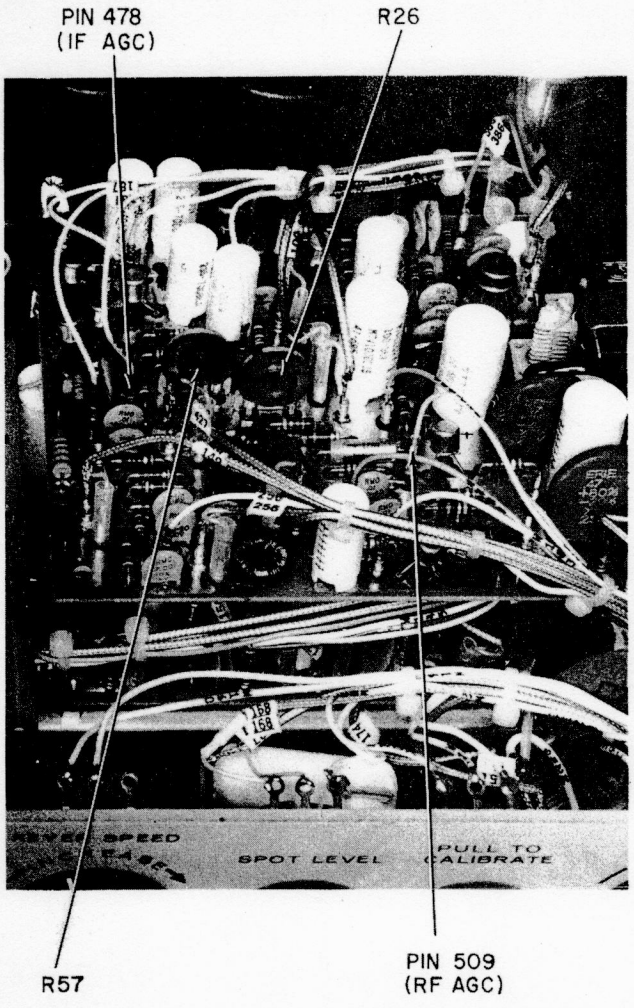

Figure 5-6. Location of AGC and "S" Meter Calibration Adjustments on AGC Detector Board

f. AGC

1. Tune the Model CX7 to 14,200.0 kHz. Set "RF GAIN" to "10" and "AF GAIN" to "5."

WARNING

Do not key the transmitter with the signal generator connected to the antenna.

2. Tune an RF signal generator to 14.2 MHz, adjust its output for 100 millivolts, and apply the signal to the Model CX7 antenna connector. Tune the Model CX7 "VFO" and "PRESELECTOR" for a peak "S" meter indication.

3. Momentarily, reduce the signal generator to 1 microvolt and set the "AGC" switch to the "OFF" position. There should be an audio output level across the 4-ohm resistor plugged into the speaker jack of at least 1.7 VRMS. If this is not present, check for a defect other than in the AGC circuit. Set "AF GAIN" to "10."

4. Set the "AGC" switch to "SLOW."

5. Adjust AGC Detector board resistor R26 (see Figure 5-6) for a voltage of +2.75 to +3.0 VDC measured at AGC Detector board pin 478 and -0.15 to -0.9 VDC measured on the AGC Detector board pin 509 (see Figure 5-6).

6. The signal generator may remain connected to the antenna connector for "S" meter calibration.

g. "S" Meter Calibration

1. Perform the AGC adjustment covered in paragraph 5.3.1.f. (Omit if just previously accomplished.)

2. Apply a 50-microvolt signal to the antenna connector. Tune the Model CX7 "VFO" and "PRESELECTOR" for a peak "S" meter indication.

3. Adjust AGC Detector board resistor R57 (see Figure 5-6) for an "S" meter indication of "S-9."

4. Remove the signal generator from the antenna and reconnect the dummy load.

h. Control Grid Fixed Bias

1. Check that only the dummy load is connected to the antenna connector.

2. Adjust the "OUTPUT" control to the "0" (full counterclockwise) position.

3. Depress the "PLATE" meter switch to the latched-in position.

4. Depress the "TUNE" switch to the latched-in position.

5. Adjust RF Driver board resistor R31 (see Figure 5-7) for a plate meter indication of "1" (100 MA) on the black scale.

6. Adjust RF Driver board resistor R34 (see Figure 5-7) for zero VDC on the collector of transistor Q5 (also on the RF Driver board) as measured with a VOM, or VTVM.

i. ALC

1. Perform the control grid fixed bias adjustment covered in paragraph 5.3.1.h. (Omit if just previously accomplished.)

2. Tune-up the transmitter for maximum power output at 29.3 MHz using the tune mode operating procedure covered in paragraph 2.4.2.r of Section II.

NOTE

RF Driver board resistor R19 (see Figure 5-7) may have to be adjusted to obtain a minimum output power of 130 watts at 29.3 MHz.

3. Depress the "DRIVE" meter switch to the latched-in position.

4. Vary the "OUTPUT" control while observing the meter needle rate of movement. If the movement is excessive, adjust RF Driver board resistor R19 (see Figure 5-7) so that the needle does not violently peg on right-hand side of the meter.

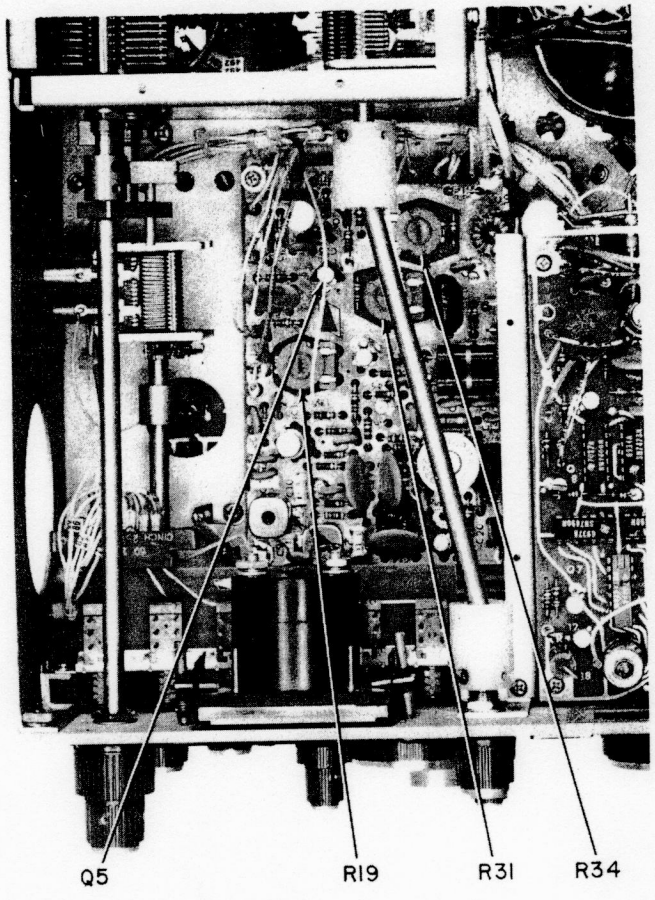

Figure 5-7. Location of Control Grid Fixed Bias and ALC Adjustments on RF Driver Board

j. Microphone Gain Adjust

NOTE

Perform the following adjustment with the Model CX7 in the receive mode so that RF interference is not present.

1. Connect an AC voltmeter to the AGC Detector board input pin 501 (see Figure 5-8a).

2. Apply a 10 MVRMS, 1 kHz signal to the "MIKE" connector.

3. Adjust Audio board resistor R12 (see Figure 5-8b) for a 30 MVRMS indication on the AC voltmeter. In some cases a microphone may have an extremely high or low gain therefore it may be necessary to adjust R12 for the appropriate amount of compensation.

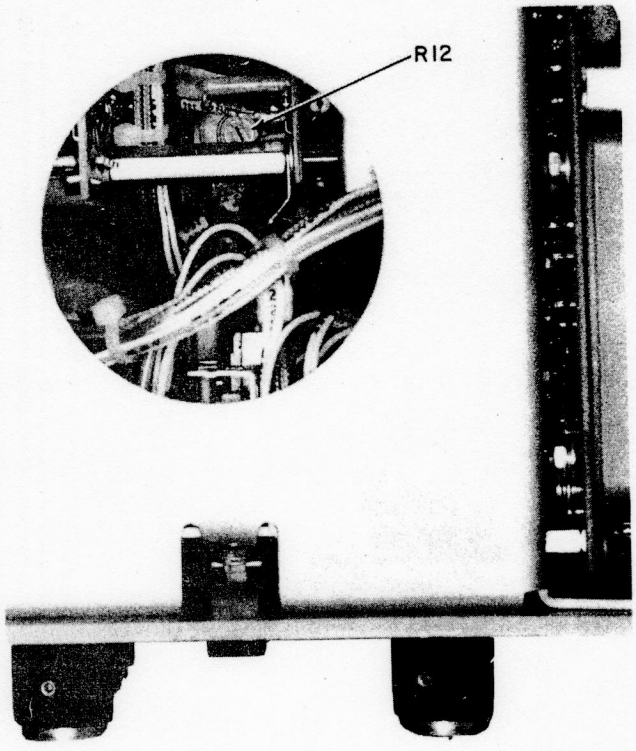

Figure 5-8(b). Location of R12 on Audio Board

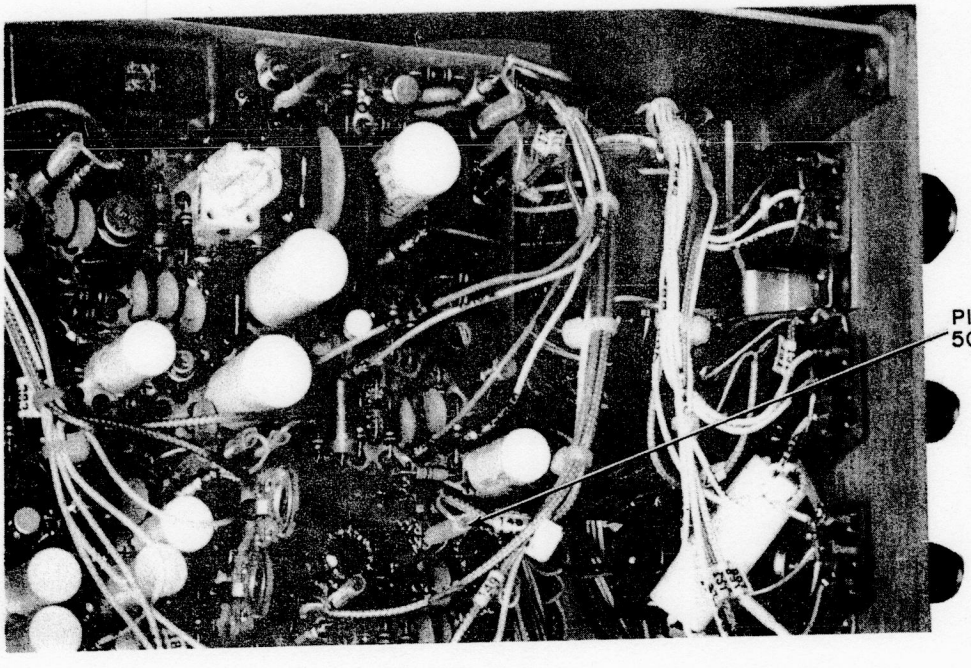

Figure 5-8(a). Location of Pin 501 on AGC Detector Board

k. Power Amplifier Broadband Adjustments

NOTE

Power amplifier broadband adjustments are performed with a dummy load and external wattmeter connected to the main antenna connector. The lower PA assembly cover must be removed to gain access to some adjustments. The "MODE" switch is set to "USB" and the "CLIPPING" control to "0." Use a fan with its air flow directed at the rear panel heat sink during the broadband adjustments.

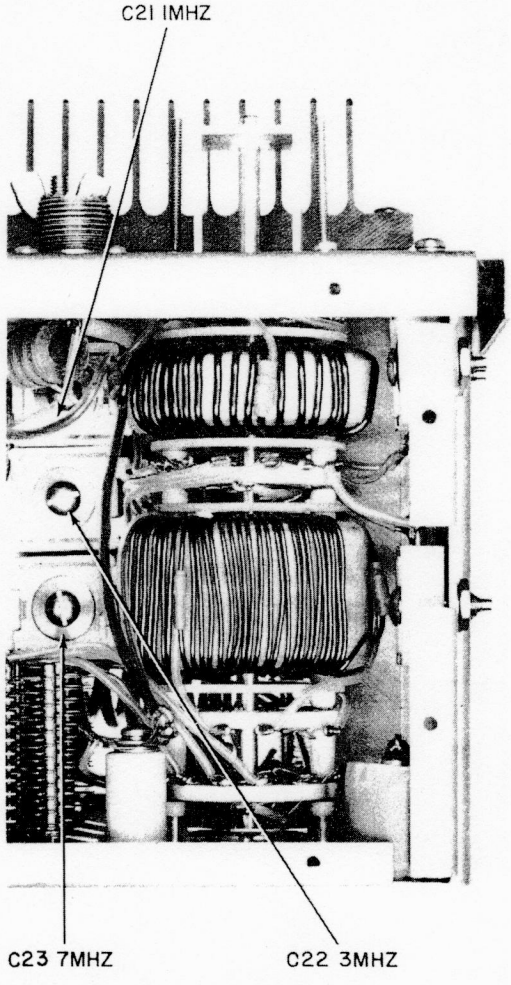

Figure 5-9(a). Location of Power Amplifier Assembly Adjustments

WARNING

High voltage is always present in the power amplifier assembly. Use a non-metallic screwdriver to perform adjustments.

1. Set the "OUTPUT" control to the "0" position.

2. Establish the receive mode.

3. Set the "BROADBAND/MANUAL" switch to the "MANUAL" position.

4. Set the "MHZ" bandswitch to the "1" position (1.875 MHz).

5. Tune the applicable "VFO A" or "VFO B" control for a "KHZ" display of 875.0 (1.875 MHz).

6. Set the "BROADBAND/MANUAL" switch to the "BROADBAND" position.

7. Depress the "TUNE" switch to the latched-in position.

8. Adjust the "OUTPUT" control for a forward power indication of 150 watts or less.

WARNING

In the following steps, do not permit the screen current to exceed 20 MA. During tune-up, it is normal for the screen current to go negative.

9. Adjust capacitor C21 (see Figure 5-9a) for a peak power and minimum screen current indication. Normal screen current should be between 2 and 12 MA for 150 watts or more output.

10. Repeat steps 1 through 8 for 3.650 MHz.

11. Adjust capacitor C22 (see Figure 5-9a) for a peak power and minimum screen current indication.

12. Use the procedure covered in above steps 1 through 9 to select the applicable frequency and the procedure covered in paragraph 2.4.2.r of Section II to adjust the applicable loading and tuning capacitor (in place of the front panel "PA TUNING" and "LOADING" control) listed in Table 5-1.

13. Establish the receive mode and replace the lower PA assembly cover.

Transmit Frequency (MHz)	Loading Capacitor	Tuning Capacitor
7.125	C23 (See Fig. 5-9a)	C1 (See Fig. 5-9b)
14.150	C9 (See Fig. 5-9c)	C7 (See Fig. 5-9b)
21.175	C8 (See Fig. 5-9c)	C3 (See Fig. 5-9b)
28.500	C11 (See Fig. 5-9c)	C2 (See Fig. 5-9b)
29.300	C10 (See Fig. 5-9c)	C4 (See Fig. 5-9b)

Table 5-1. Power Amplifier Broadband Adjustments

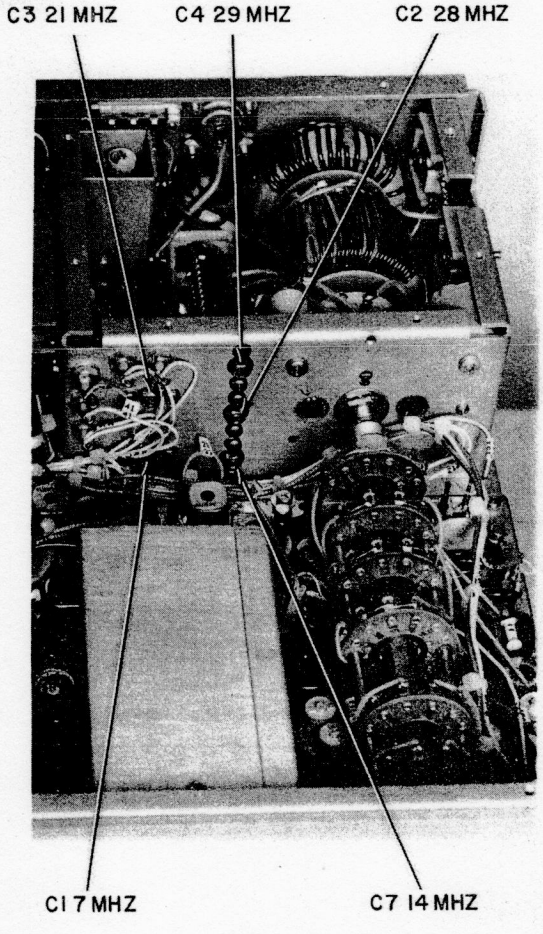

Figure 5-9(b). Location of Power Amplifier Assembly Adjustments

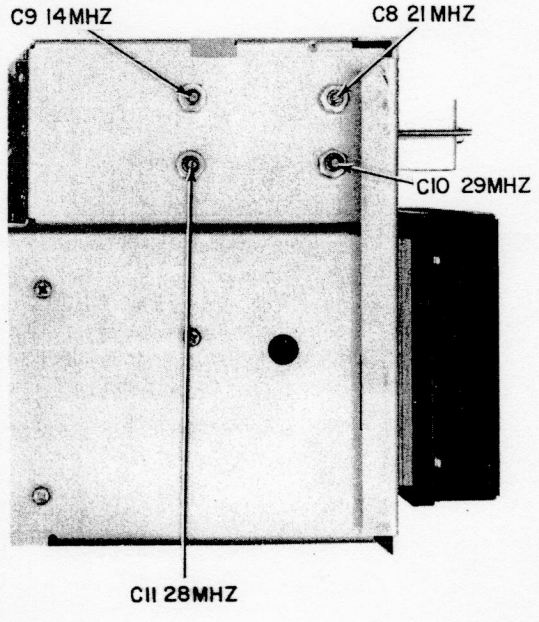

Figure 5-9(c). Location of Power Amplifier Assembly Adjustments

1. Reflectometer Calibration

NOTE

Reflectometer calibration is performed with a dummy load and external wattmeter connected to the main antenna connector. The lower PA assembly cover must be removed to gain access to the adjustments.

WARNING

High voltage is always present in the power amplifier assembly and reflectometer assembly. Use a nonmetallic screwdriver to perform adjustments.

1. Set the "OUTPUT" control to the "0" position.

2. Establish the receive mode.

3. Set the "BROADBAND/MANUAL" switch to the "MANUAL" position.

4. Set the "MHZ" bandselector to the "7" position.

5. Tune the applicable "VFO A" or "VFO B" control for a "KHZ" display of "200.0" (7.200 MHz).

6. Depress the "TUNE" switch to the latched-in position.

7. Use the procedure covered in paragraph 2.4.2.r of Section II to manually tune the transmitter for 150 watts as indicated on the external wattmeter.

8. Depress the "REV PWR" switch to the latched-in position.

9. Adjust reflectometer assembly capacitor C3 (see Figure 5-10) for a "0" indication on the CX7 front panel meter.

10. Depress the "FWD PWR" switch to the latched-in position.

11. Adjust reflectometer assembly capacitor C4 (see Figure 5-10) for a "4.2" indication on the CX7 front panel meter.

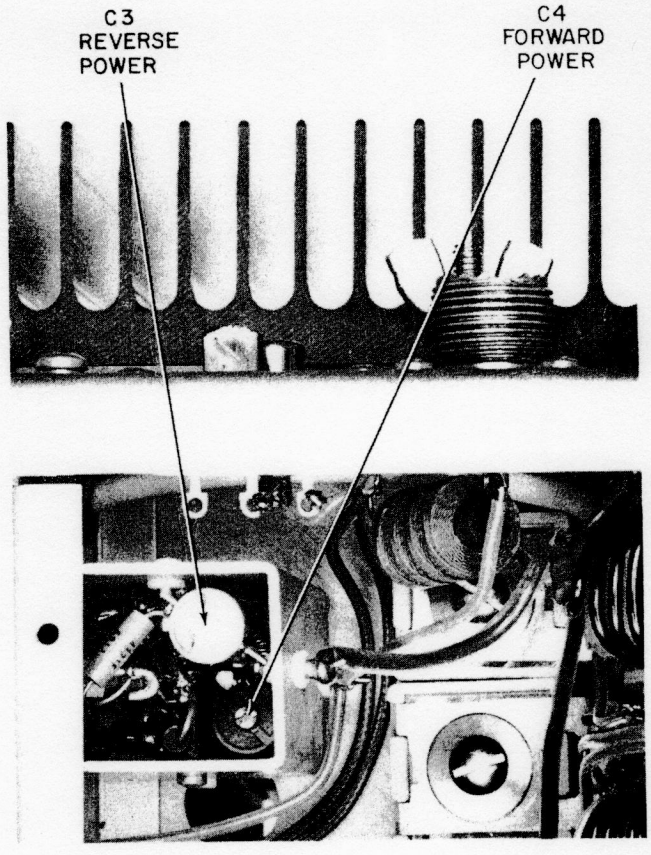

Figure 5-10. Reflectometer Adjustments

12. Establish the receive mode and replace the lower PA assembly cover.

NOTE

The adjustments on the following pages require the aid of an electronic counter for exact frequency settings.

5.3.2 Exact Frequency and Bandpass Adjustments

a. PTO A

1. Establish the receive mode.

2. Set the "RECEIVE CHANNEL" switch to the "A" position.

3. Adjust the "VFO A" control to the full CCW position.

4. Remove the PTO A cover.

5. Connect an electronic counter to PTO A output pin 3 (see Figure 5-11a).

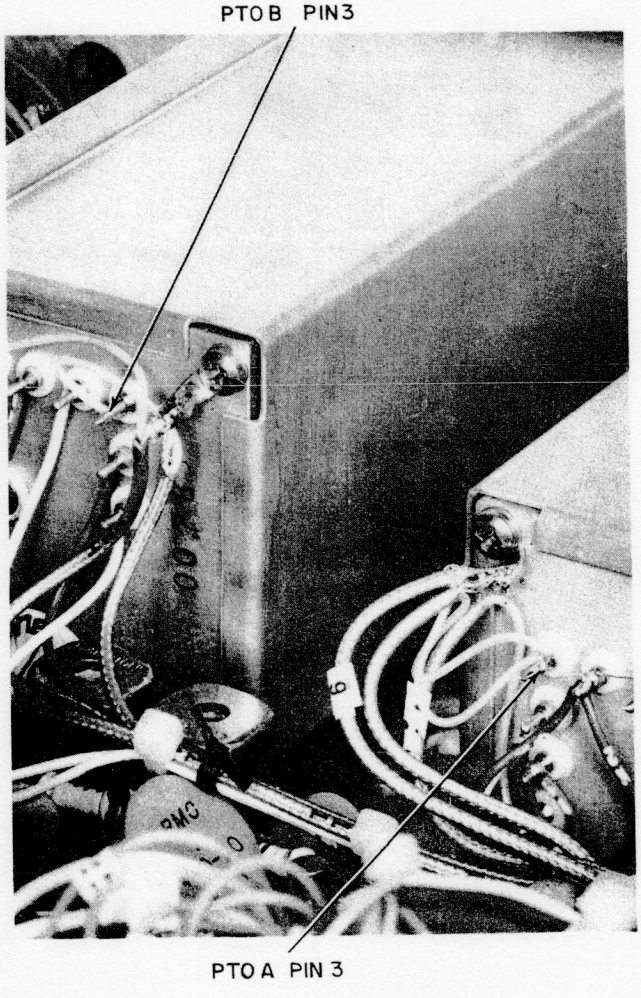

Figure 5-11(a). Location of PTO Module Pin 3

6. Adjust PTO A board capacitor C16 (see Figure 5-11b) for an indication on the electronic counter between 3040 and 3050 kHz.

7. Repeat measurement with PTO A cover in place, as the cover will affect the final PTO frequency.

b. PTO B

1. Establish the receive mode.

2. Set the "RECEIVE CHANNEL" switch to the "B" position.

3. Adjust the "VFO B" control to the full CCW position.

4. Remove the PTO B cover.

5. Connect an electronic counter to PTO B output pin 3 (see Figure 5-11a).

6. Adjust PTO B board capacitor C16 (see Figure 5-11b) for an indication on the electronic counter between 3040 and 3050 kHz.

7. Repeat measurement with PTO B cover in place, as the cover will affect the final PTO frequency.

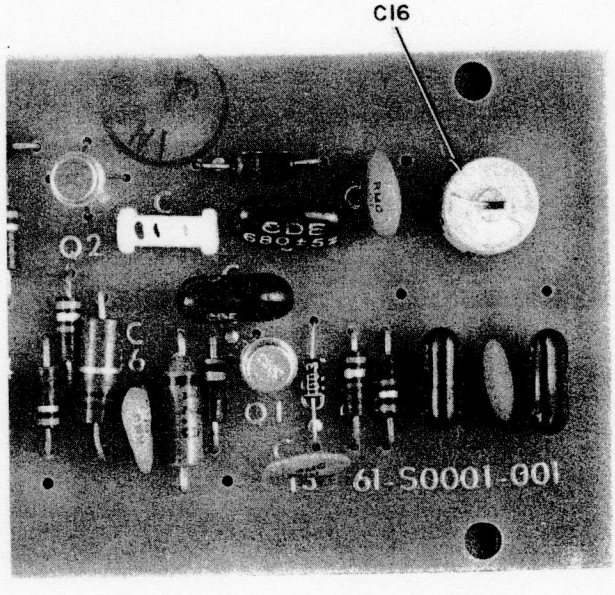

Figure 5-11(b). Location of C16 on PTO Board

c. 8.8 MHz Carrier Adjust

NOTE

The 8.8 MHz carrier adjust is performed with a dummy load connected to the main antenna connector. The following may be accomplished without repositioning the AGC Detector and Audio boards.

1. Establish the receive mode.

2. Set the "MHZ" bandswitch to the "1" position.

3. Set the "IF SHIFT" control to the mid-range position.

4. Set the "MODE" selector to the "USB" position.

5. Set the "OUTPUT" control to the "0" position.

6. While listening to the pitch of the hiss, adjust the "IF SHIFT" control to the position where the pitch is the same in both the "USB" and "LSB" position of the "MODE" switch.

7. Without disturbing the setting of the "IF SHIFT" control, loosen the knob setscrews, set the knob pointer to "0" and tighten the knob setscrews.

8. Recheck the requirement in step 6.

9. Set the "MODE" switch to the "USB" position.

10. Measure the frequency at AGC Detector board input pin 487 (see Figure 5-12a) and note it for reference in step 12.

11. Depress the "CONTROL-TUNE" pushbutton to the latched-in position.

12. Measure the frequency at AGC Detector board input pin 495 (see Figure 5-12a). The frequency should be within ±20 Hz of the frequency noted in step 10. If not, adjust BFO board resistor R46 through the access hole on the AGC Detector board.

13. Establish the receive mode.

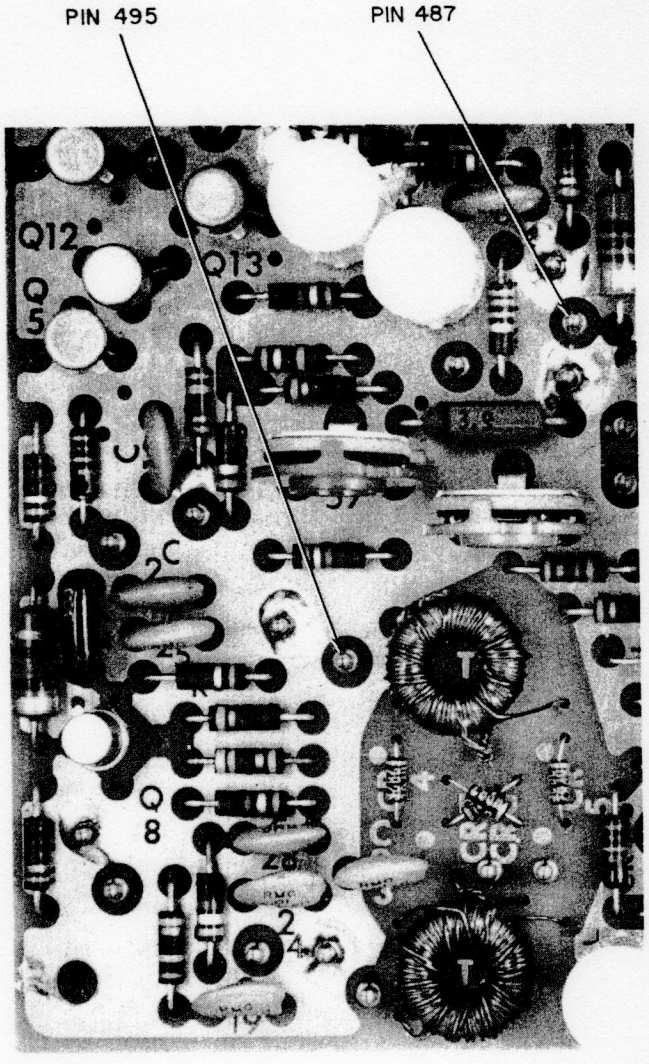

Figure 5-12(a). Location of Pins 487 and 495 on AGC Detector Board

d. Normal 34.2 MHz Adjust

NOTE

The AGC Detector and Audio boards will have to be positioned to gain access to BFO board adjustments. Perform adjustments with BFO board cover in place.

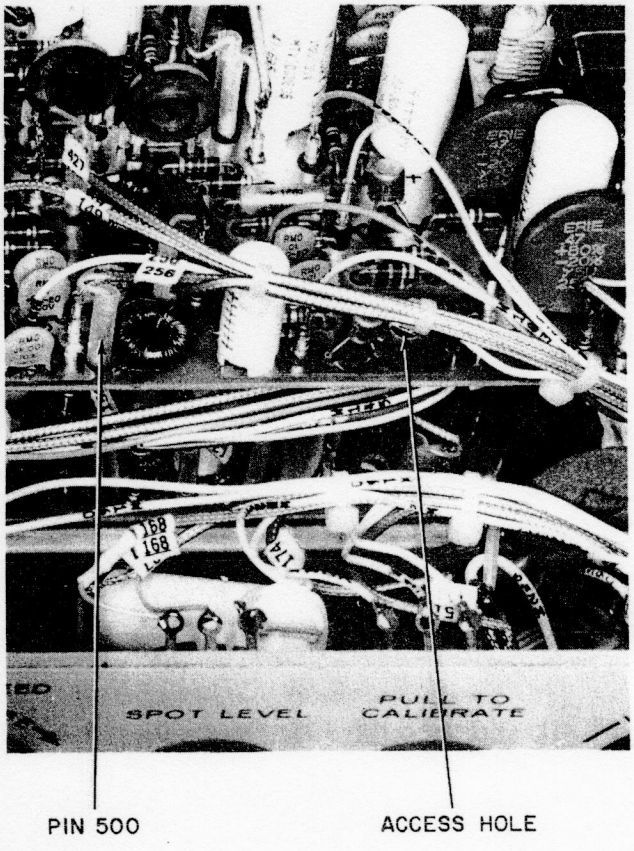

Figure 5-12(b). Location of Pin 500 and Access Hole on AGC Detector Board

1. Perform the 8.8 MHz carrier adjust covered in paragraph 5.3.2.c. (Omit if just previously accomplished.)

2. Establish the receive mode.

3. Set the "MODE" selector to the "USB" position.

4. Set the "PULL-TO-CALIBRATE" control to the midrange position (do not pull out).

5. Connect the electronic control to AGC Detector board input pin 487 (see Figure 5-13a).

6. Adjust the "IF SHIFT" control for a frequency indication of 8.8165 MHz ±50 Hz.

7. Set the "MODE" switch to the "LSB" position. The frequency indication should change to 8.8136 MHz ±100 Hz.

8. Connect the RF millivoltmeter to IF board input pin 407 (see Figure 5-13b).

9. Adjust BFO board transformers T1 and T2 (see Figure 5-13c) for a maximum output indication on the RF millivoltmeter. The output level must be greater than 200 MVRMS.

10. Set the "PULL-TO-CALIBRATE" control to the full CCW position.

11. Connect the electronic counter to IF board input pin 407 (see Figure 5-13b).

12. Adjust BFO board capacitor C31 (see Figure 5-13c) for a frequency indication of 34.2820 MHz ±100 Hz.

13. Adjust the "PULL-TO-CALIBRATE" control for a frequency indication of 34.2835 MHz ±100 Hz.

e. Offset 34.2 MHz Adjust

NOTE

The AGC Detector and Audio boards will have to be positioned to gain access to BFO board adjustments. Perform adjustments with BFO board cover in place.

1. Establish the receive mode.

2. Depress the transmit VFO "A/T.O." switch to the latched-in position.

3. Adjust the "TRANSMITTER OFFSET" control to the midrange position.

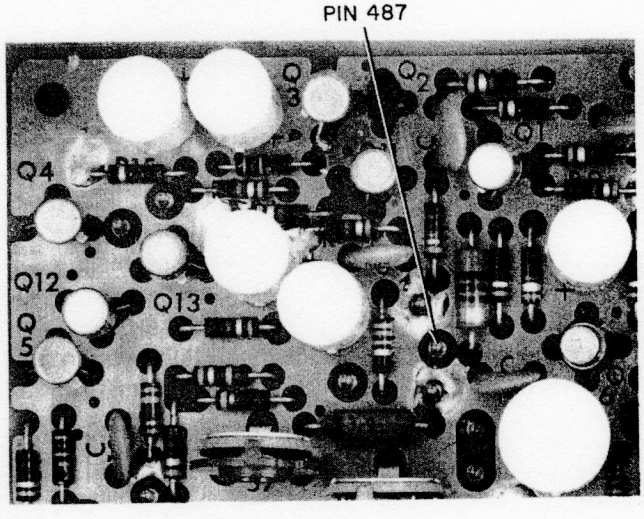

Figure 5-13(a). Location of Pin 487 on AGC Detector Board

4. Connect an RF millivoltmeter to IF board output pin 405 (see Figure 5-13b).

5. Adjust BFO board inductor L4 and transformer T3 (see Figure 5-13c) for a maximum output indication on the RF millivoltmeter. The level must be greater than 200 MVRMS.

6. Connect an electronic counter to IF board output pin 405 (see Figure 5-13b).

7. Adjust BFO board resistor R43 (see Figure 5-13c) for a 34.2835 MHz ±200 Hz indication on the electronic counter. If necessary, readjust inductor L4 and transformer T3 to meet the requirement.

8. Return the AGC Detector and Audio boards to their original positions.

f. 30.2 to 31.2 MHz Mixer Bandpass

1. Establish the receive mode.

2. Set the "RECEIVE CHANNEL" switch to the "A" position.

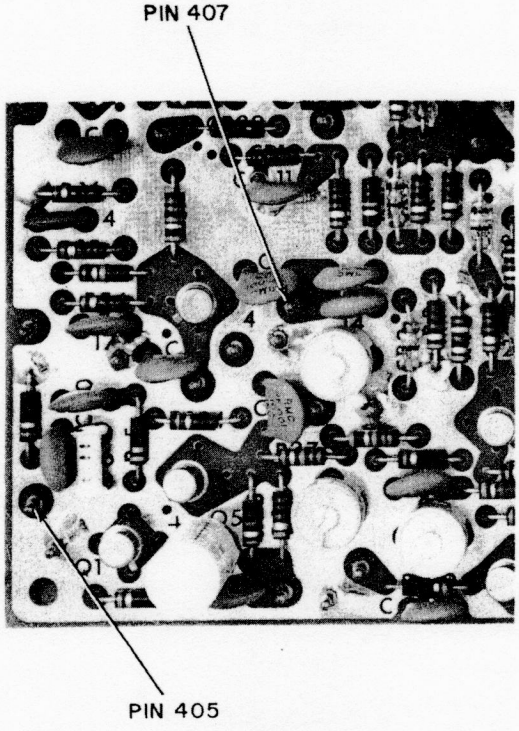

Figure 5-13(b). Location of Pins 407 and 405 on IF Board

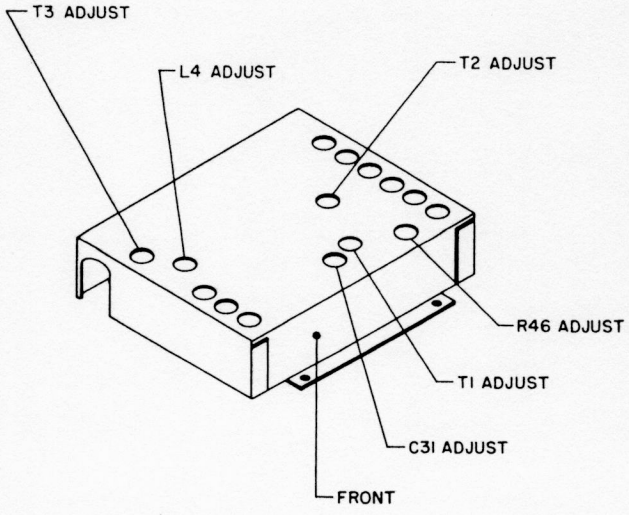

Figure 5-13(c). Location of Adjustment Holes on BFO Cover

3. Set the "IF SHIFT" control to the mid-range position.

4. Set the "AGC" switch to the "OFF" position.

5. Set the "BLANKER" to the "OFF" position.

6. Disconnect wire no.4 from IF board input pin 403. (PTO A input to IF board, see Figure 5-14.)

7. Connect the sweep generator output to IF board input pin 403.

8. Connect an RF detector probe and oscilloscope to IF board output pin 415 (30.2 to 31.2 MHz test point, see Figure 5-14).

9. Tune IF board transformer T1, T2, and inductor L1 (see Figure 5-14) for the response curve shown in Figure 5-15.

10. Remove the sweep generator from IF board input pin 403 and reconnect wire no.4.

11. Tune the "VFO A" control for a CX7 counter indication of "500.0."

12. Connect the RF millivoltmeter to IF board output pin 415 (see Figure 5-14).

13. Adjust IF board capacitor C3 (see Figure 5-14) for a 600 MVRMS indication on the RF millivoltmeter.

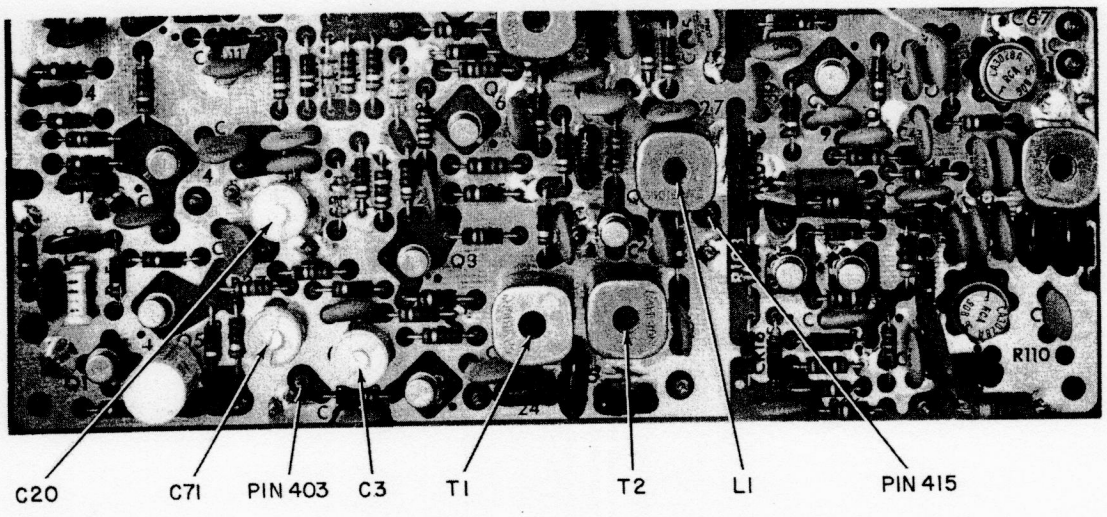

Figure 5-14. Location of Pins and Adjustments on IF Board

14. Set the "RECEIVE CHANNEL" switch to the "B" position.

15. Adjust IF board capacitor C20 (see Figure 5-14) for a 600 MVRMS indication on the RF millivoltmeter.

16. Set the "OUTPUT" control to the "0" position.

17. Check that a dummy load is connected to the main antenna connector.

18. Depress the transmit VFO "A/T.O." switch to the latched-in position.

19. Depress the "TUNE" switch to the latched-in position.

20. Adjust IF board capacitor C71 (see Figure 5-14) for a 600 MVRMS indication on the RF millivoltmeter.

21. Establish the receive mode.

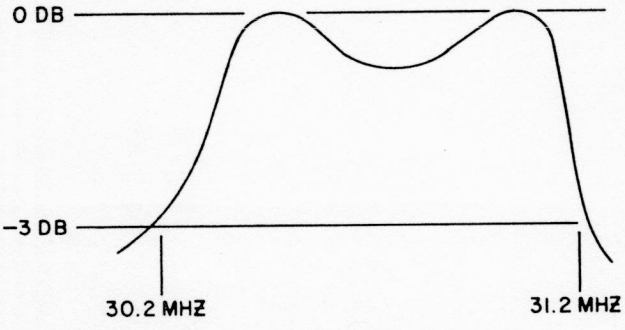

Figure 5-15. Response Curve for 30.2 to 31.2 MHz Bandpass Adjustments

5.3.2.1 Transmit and Receive Bandpass

NOTE

Unless otherwise specified, transmit and receive bandpass adjustments are performed in the receive mode with a sweep generator connected to the rear panel "HI-IF" test jack.

a. Perform the 30.2 to 31.2 MHz mixer bandpass alignment covered in paragraph 5.3.2.f. (Omit if just previously performed.)

b. Set the "RECEIVE CHANNEL" switch to the "A" position.

c. Set the "IF SHIFT" control to the midrange position.

d. Set the "AGC" switch to the "OFF" position.

e. Set the "BLANKER" to the "OFF" position.

f. Connect the sweep generator output to the rear panel "HI-IF" jack and adjust its output for 20 DB. Insert an appropriate amount of attenuation to yield a display of approximately 1.5 volts from the reference base line to the peak of the bandpass response.

g. Unplug wire no.15 from Front End board pin 71. (Wire no.15 remains disconnected until paragraph 5.3.2.1.k.) Switch wire no.203 from Front End board pin 63 to pin 71. (See Figure 5-16a).

h. Connect the RF detector probe of the oscilloscope to the IF board transistor Q10 Gate no.1 (see Figure 5-16b).

i. Connect the RF detector probe of the oscilloscope to IF board pin 465.

j. Tune Front End board transformers T6, T7, T8 (see Figure 5-16a) and IF board transformer T3 (see Figure 5-16b) for the response curve shown in Figure 5-17.

k. Switch wire no.203 from Front End board pin 71 to 63 and reconnect wire no.15 to Front End board pin 71 (see Figure 5-16a).

l. Disconnect the sweep generator from the Model CX7.

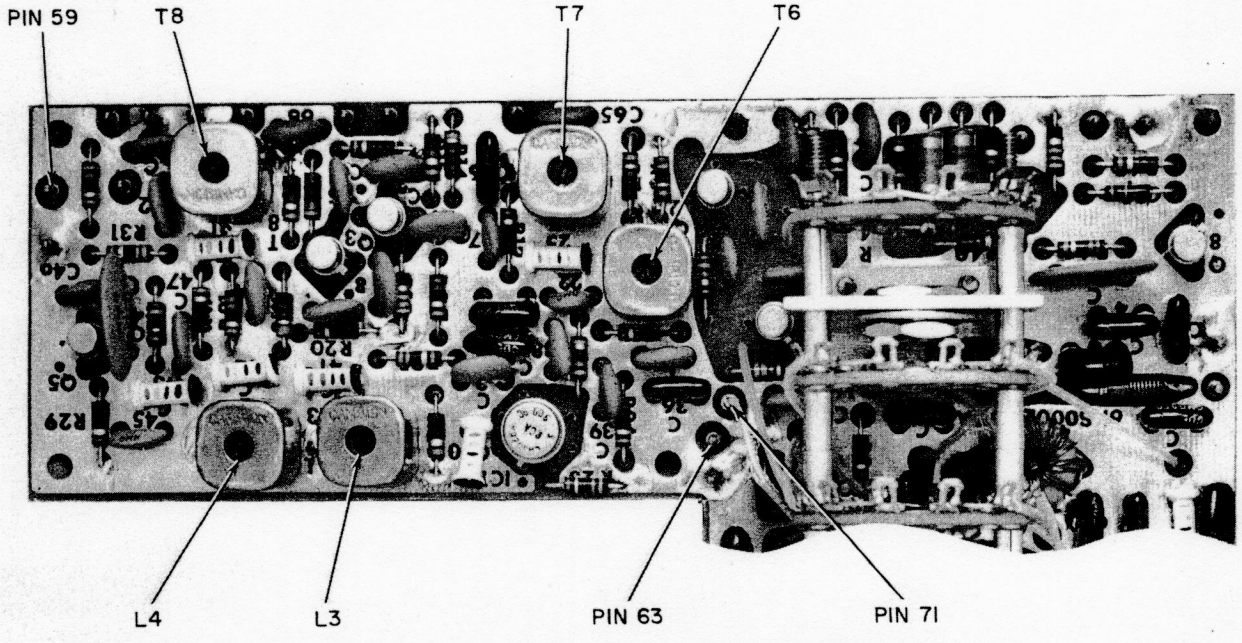

Figure 5-16(a). Location of Pins and Adjustments on Front End Board

m. Tune an RF signal generator to 14.2 MHz, adjust its output for 1 microvolt and apply the signal to the Model CX7 antenna connector. Set the "MHZ" bandswitch to "14", tune the "VFO" and "PRESELECTOR" for a peak "S" meter indication.

n. Set the "AGC" switch to the "OFF" position.

o. Connect an RF millivoltmeter to AGC Detector board input pin 493 (see Figure 5-16c).

p. Tune IF board capacitors C40, C41, C42, transformers T8 and T10 (see Figure 5-16b) for a maximum RF millivoltmeter indication.

q. Connect an RF millivoltmeter to IF board input pin 425. (See Figure 5-16b.)

r. Set the "BLANKER" control to the full clockwise position.

s. Tune IF board transformer T6 (see Figure 5-16b) for a maximum RF millivoltmeter indication.

t. Disconnect the signal generator from the Model CX7 antenna connector.

u. Adjust the Model CX7 for approximately 50 watts of forward power at 29.5 MHz in the tune mode.

v. Peak Front End board inductors L3 and L4 (see Figure 5-16a) for maximum power output.

w. Peak RF Driver board inductors L1 and L2 (see Figure 5-16c) for maximum power output.

x. Depress the "PTT" switch to the latched-in position.

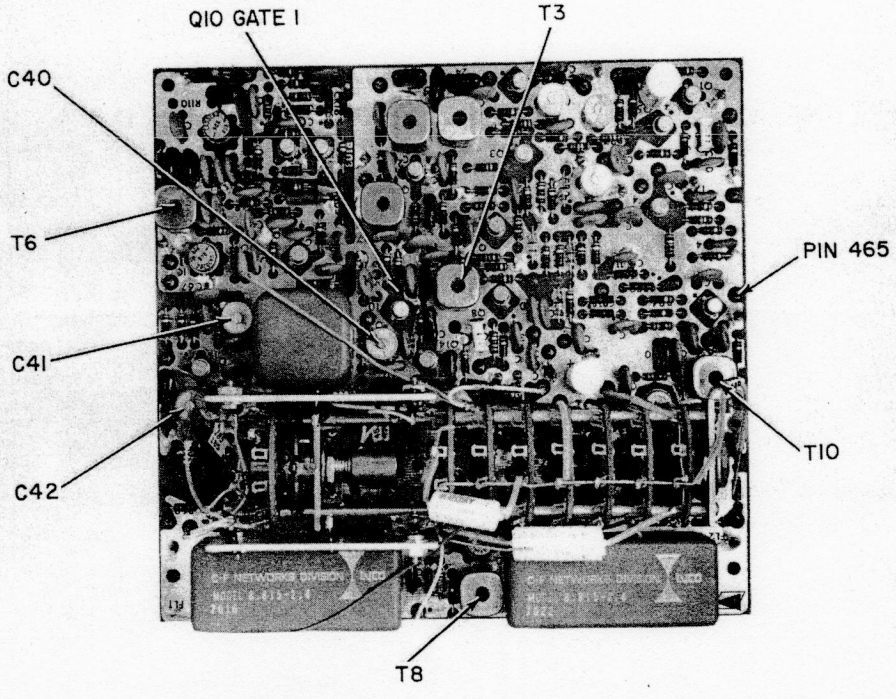

Figure 5-16(b). Location of Pins and Adjustments on IF Board

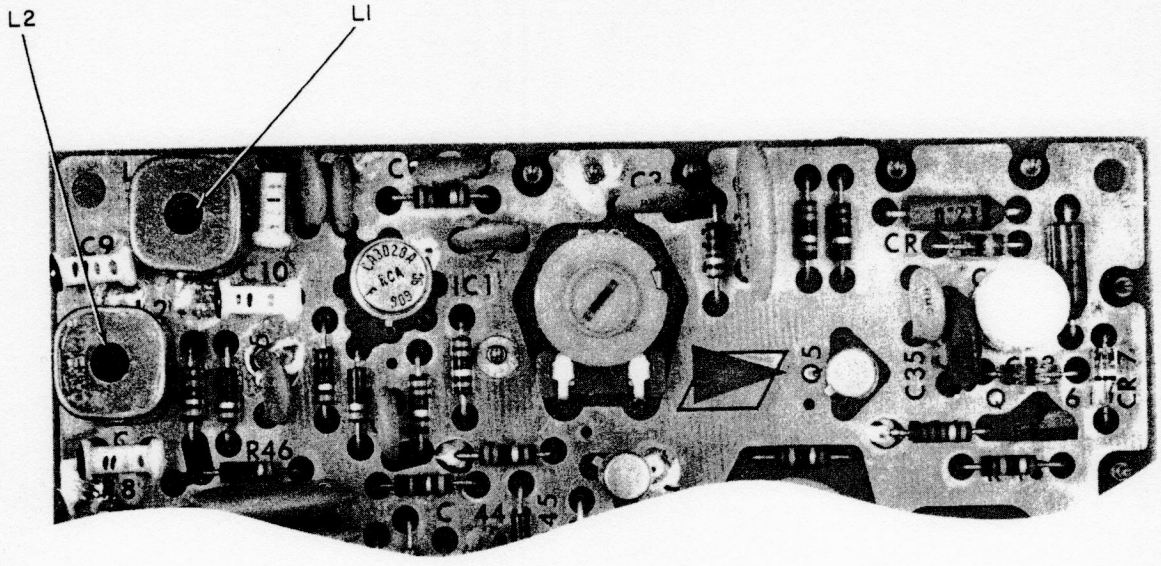

Figure 5-16(c). Location of L1 and L2 on RF Driver Board

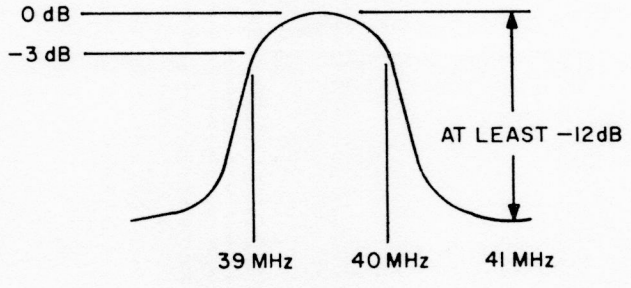

Figure 5-17. Response Curve for the Transmit and Receive Bandpass Adjustments

5.4 OPTIONAL FILTER AND CRYSTAL INSTALLATION CHECKOUT

5.4.1 Optional Filters

a. Set the "IF SHIFT" control to the "0" position.

b. Set the "MODE" switch to the "CW1" position.

c. Perform the sensitivity check covered in paragraph 5.2.2.a (only at 7.2 MHz).

d. Repeat the sensitivity check with the optional filters switched into the circuit by the "MODE" switch ("CW2", "CW3", or "FSK" position). With the signal properly tuned to the center passband of the applicable filter, the audio output difference between off and on-frequency measurements, of the sensitivity check; should not be less than 10 DB.

e. Do not disconnect the RF signal generator or VTVM.

f. Connect an electronic counter to the output of the RF signal generator.

g. With the optional filters switched into the circuit by the "MODE" switch ("CW2", "CW3", or "FSK" position), monitor the audio output level and counter indication and confirm the following 6 DB bandwidths:

Filter	6 DB Bandwidth
Deluxe CW	200 to 300 Hz
Standard CW	350 to 450 Hz
FSK	1150 to 1250 Hz

5.4.2 Optional Crystals

a. Set the "MODE" selector to the "USB" position.

b. Set the "IF SHIFT" control to the "-1.5" position.

c. Set the "PULL-TO-CALIBRATE" control to the "OUT" position. (Do not rotate.)

d. Set the "KHZ" bandswitch to the applicable position ("A", "B", or "C" position).

e. Tune the "VFO A" or "VFO B" control for a "000.0" display on the "KHZ" counter.

f. Tune the applicable trimmer capacitor (see Figure 5-18) listed in Table 5-2 for a zero beat with the calibrator output.

g. For each newly installed crystal, perform the sensitivity check covered in paragraph 5.2.2.a. at points 100 kHz from the band ends, i.e., X.100 MHz and X.900 MHz. Where X = (crystal frequency (MHz) - 40 MHz). The audio output difference between off and on-frequency measurements of the sensitivity check should not be less than 10 DB.

h. Connect the dummy load to the Model CX7.

i. Check that the Model CX7 can be manually tuned-up using the procedure covered in paragraph 2.4.2.r of Section II at the following frequencies for each of the newly installed crystals.

Transmit Frequency (MHz)	Screen Current (MA)	Drive
X.100	3 to 8	2 to 3
X.900	3 to 8	2 to 3

X = (crystal frequency (MHz) - 40 MHz)

Crystal Frequency (MHz)	Bandswitch Position	Operating Frequency (MHz)	Trimmer Designation
42.0	A	2 - 3	C56
44.0	B	4 - 5	C68
45.0	B	5 - 6	C68
46.0	B	6 - 7	C68
48.0	C	8 - 9	C77
49.0	C	9 - 10	C77
50.0	C	10 - 11	C77
51.0	C	11 - 12	C77
52.0	C	12 - 13	C77
53.0	C	13 - 14	C77

Table 5-2. Optional Crystal Adjustments

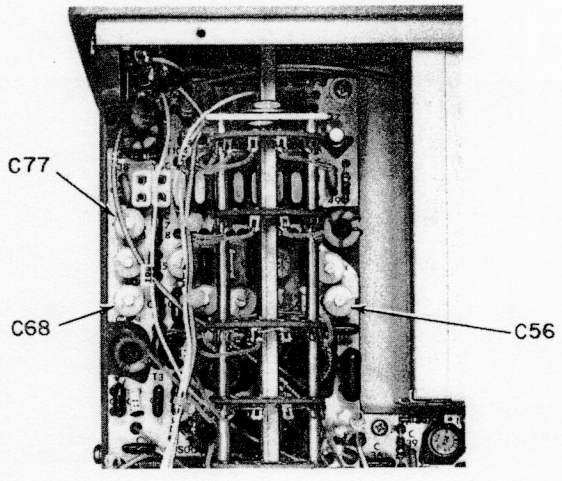

Figure 5-18. Location of C56, C68, and C77 on Front End Board

Wire No.	Color	From	To
1	BLUE	A1A-1	A1A-2
2	BLUE	A1A-2	A1B-2
3	BLUE	A1A-2	A3-118
4	COAX	A1A-7	A8-403
4-SHLD		A1A-6	A8-404
5	COAX	A1A-3	E56
5-SHLD		A1A-6	GND
6	COAX	A1A-3	J5-24
6-SHLD		A1A-6	J5-23
7	WHITE	A1A-4	J5-22
8	RED	A1A-5	A3-113
9	RED	A1A-5	A1B-5
10	WHITE	A1B-1	R1-2
11	COAX	A1B-7	A8-409
11-SHLD		A1B-6	A8-410
12	COAX	A1B-3	E55
12-SHLD		A1B-6	A7-16
13	WHITE	A1B-4	P3-J
14	WHITE	A2-52	J6-11
15	COAX	A2-53	A2-71
15-SHLD		A2-54	A2-72
16	COAX	A2-76	A12-521
16-SHLD		A2-77	A12-522
17	COAX	A2-78	J8-1
17-SHLD		A2-79	J8-2
18	WHITE	A2-58	A2-66
19	NOT USED		
20	NOT USED		
21	GRAY	A2-65	A3-101
22	NOT USED		
23	WHITE	A2-66	A9-509
24	GREEN	A2-67	A3-107
25	COAX	A2-68	A8-421
25-SHLD		A2-69	A8-422
26	NOT USED		
27	BLUE	A2-61	A3-119
28	COAX	A2-59	R9-4
28-SHLD		A2-60	R9-6
29	RED	A2-70	A3-114
30	NOT USED		
31	WHITE	A10-1	J17
32	GRAY	A3-102	J5-16
33	GRAY	A3-103	A6-327
34	GRAY	A3-104	TB1-13
35	GRAY	A3-105	A8-432

Table 6-1. Wire Run List (Sheet 1 of 12)

Wire No.	Color	From	To
36	GREEN	A3-106	A4-213
37	GREEN	A3-108	A6-326
38	GREEN	A3-109	A8-466
39	GREEN	A3-110	TB1-15
40	GREEN	A3-110	J5-15
41	WHITE	A3-116	A10-2
42	YELLOW	A3-117	A5-261
43	RED	A3-114	A4-200
44	RED	A3-113	A5-266
45	RED	A3-111	A8-401
46	RED	A3-112	A6-305
47	NOT USED		
48	BLUE	A3-120	A5-256
49	BLUE	A3-120	A6-328
50	BLUE	A3-121	C45
51	BLUE	A3-121	A8-451
52	BLUE	A3-122	TB1-8
53	WHITE	A3-123	R11-3
54	NOT USED		
55	COAX	A3-125	A6-313
55-SHLD		A3-126	A6-314
56	WHITE	A3-127	C2-1
57	NOT USED		
58	NOT USED		
59	NOT USED		
60	WHITE	A3-130	R11-1
61	ORANGE	A3-132	J6-12
62	ORANGE	A3-131	Q4-3
63	WHITE	A3-133	Q4-1
64	WHITE	A3-135	C2-1
65	BROWN	A3-136	Q3-3
66	WHITE	A3-138	Q3-1
67	WHITE	A3-137	Q3-2
68	WHITE	A3-139	C6-2
69	WHITE	A3-141	C9-1
70	WHITE	A3-142	Q2-2
71	WHITE	A3-143	Q2-1
72	WHITE	A3-144	Q1-1
73	WHITE	A3-145	Q1-2
74	NOT USED		
75	BLUE	A3-147	Q2-3
76	WHITE	A3-148	C6-2
77	WHITE	A3-149	C9-1
78	RED	A3-150	Q1-3
79	NOT USED		

Table 6-1. Wire Run List (Sheet 2 of 12)

Wire No.	Color	From	To
80	VIOLET	A3-152	C3-1
81	NOT USED		
82	WHITE	A3-154	P4-B
83	WHITE	A3-155	C3-2
84	NOT USED		
85	WHITE	A3-157	C7-2
86	WHITE	A3-158	P4-C
87	NOT USED		
88	NOT USED		
89	NOT USED		
90	NOT USED		
91	NOT USED		
92	NOT USED		
93	NOT USED		
94	NOT USED		
95	NOT USED		
96	NOT USED		
97	NOT USED		
98	NOT USED		
99	WHITE	A4-201	R8-2
100	WHITE	A4-202	R2-2
101	WHITE	A4-203	R2-3
102	WHITE	A4-204	R8-1
103	WHITE	A4-205	R3-8
104	BLUE	A4-206	P3-6
105	COAX	A4-207	A8-405
105-SHLD		A4-208	A8-406
106	WHITE	A4-209	R8-3
107	WHITE	A4-210	R2-1
108	NOT USED		
109	COAX	A4-215	A9-487
109-SHLD		A4-214	A9-486
110	WHITE	A4-216	S8B-6
111	RED	A8-427	S8B-8
112	BLUE	S8F-1	S8B-1
113	WHITE	A4-217	R6-2
114	WHITE	A4-218	R6-3
115	WHITE	A4-219	P3-L
116	BLUE	A4-220	A3-118
117	WHITE	A4-221	P3-H
118	WHITE	A4-222	R6-1
119	COAX	A4-224	A8-407
119-SHLD		A4-225	A8-408
120	ORANGE	A5-251	J6-13
121	WHITE	A5-252	P4-2

Table 6-1. Wire Run List (Sheet 3 of 12)

Wire No.	Color	From	To
122	WHITE	A5-257	S8G-4
123	WHITE	A5-258	A6-329
124	WHITE	A5-259	J5-2
125	WHITE	A5-260	S8C-1
126	YELLOW	A5-262	A10A3-9
127	WHITE	A5-263	A5-265
128	WHITE	A5-264	A3-155
129	WHITE	A5-265	J18
130	COAX	A5-267	R9-5
130-SHLD		A5-268	R9-6
131	COAX	A5-269	XV1-11
131-SHLD		A5-270	A10A3E1
132	COAX	A6-301	J2-1
132-SHLD		A6-302	J2-2
133	WHITE	J5-1	J18
134	COAX	A6-304	R10-3
134-SHLD		A6-305	E4
135	COAX	A6-306	R13-2
135-SHLD		A6-307	R13-3
136	COAX	A6-308	R14-5
136-SHLD		A6-309	R14-6
137	COAX	A6-310	R3-2
137-SHLD		A6-311	E6
138	NOT USED		
139	WHITE	A6-319	S8D-6
140	COAX	A6-316	R13-1
140-SHLD		A6-315	R13-3
141	COAX	A8-423	S1D-2
141-SHLD		A8-424	S1D-8
142	COAX	A6-320	R11-2
142-SHLD		A6-321	E52
143	COAX	A6-322	S1E-2
143-SHLD		A6-323	S1E-1
144	COAX	A6-324	R12-3
144-SHLD		A6-325	R12-2
145	WHITE	A6-329	S8E-6
146	WHITE	A5-260	S1D-5
147	WHITE	A8-430	P4-F
148	COAX	A6-330	A9-501
148-SHLD		A6-331	A9-502
149	COAX	S1D-3	A9-496
149-SHLD		S1D-8	A9-497
150	COAX	A6-335	J11-1
150-SHLD		A6-334	J11-2
151	COAX	A2-74	S4-2

Table 6-1. Wire Run List (Sheet 4 of 12)

Wire No.	Color	From	To
151-SHLD		A2-73	E51
152	COAX	A6-336	R10-1
152-SHLD		A6-337	E4
153	WHITE	C43	P3-11
154	COAX	A9-473	E57
154-SHLD		A9-472	GND
155	NOT USED		
156	NOT USED		
157	BROWN	A3-136	C36
158	VIOLET	C3-1	C46
159	WHITE	C47	P3-C
160	WHITE	C42	R4-1
161	WHITE	C41	R4-2
162	WHITE	C40	J12-3
163	WHITE	C39	J12-1
164	WHITE	C38	S8C-1
165	WHITE	A8-402	P3-6
166	WHITE	A8-411	P3-5
167	WHITE	A8-412	P3-4
168	COAX	A8-413	R3-1
168-SHLD		A8-414	REMOVED
169	COAX	A8-453	A8-459
169-SHLD		A8-452	A8-460
170	WHITE	A8-417	P3-9
171	WHITE	A8-418	R7-1
172	WHITE	A8-419	P3-2
173	WHITE	A8-420	R7-3
174	COAX	A9-475	S4-1
174-SHLD		A9-474	E51
175	NOT USED		
176	WHITE	A8-428	S8F-6
177	WHITE	A8-431	J5-17
178	WHITE	A9-476	J5-11
179	NOT USED		
180	COAX	A8-454	A8-456
180-SHLD		A8-455	REMOVED
181	NOT USED		
182	COAX	A8-435	A9-500
182-SHLD		A8-436	A9-499
183	WHITE	A9-506	P4-E
184	WHITE	A8-471	S8G-6
185	WHITE	A8-467	S8H-6
186	COAX	A9-489	R14-4
186-SHLD		A9-488	R14-6
187	WHITE	A9-477	S6-11

Table 6-1. Wire Run List (Sheet 5 of 12)

Wire No.	Color	From	To
188	COAX	A8-447	J9-1
188-SHLD		A8-448	J9-2
189	GREEN	A8-416	A8-466
190	NOT USED		
191	VIOLET	A10A3-8	C3-1
192	RED	C4-2	C7-1
193	RED	C4-1	C5-2
194	RED	C6-1	C9-2
195	RED	C8-1	J7
196	COAX	C8-1	E41
196-SHLD		E15	E53
197	RED	C8-2	C5-1
198	NOT USED		
199	WHITE	J1-2	J3
200	NOT USED		
201	NOT USED		
202	WHITE	J2-3	S1C-2
203	COAX	A2-63	J10-1
203-SHLD		A2-64	J10-2
204	WHITE	J13-1	S8C-1
205	WHITE	S1A-5	XF1-2
206	WHITE	J5-3	XF1-8
207	ORANGE	J5-4	A3-132
208	VIOLET	J5-5	A3-152
209	RED	J5-6	A3-150
210	BLUE	J5-7	A3-147
211	BROWN	J5-8	A3-136
212	BLACK	J5-9	E11
213	WHITE	J5-10	A2-58
214	WHITE	J5-12	R14-2
215	WHITE	J5-13	P4-E
216	WHITE	J5-14	M1-2
217	WHITE	J5-18	R5-2
218	WHITE	J5-19	J17
219	WHITE	J5-20	A10-4
220	WHITE	J5-21	P3-N
221	WHITE	A10A3-10	E18
222	WHITE	J6-2	S1A-3
223	WHITE	J6-3	S1A-1
224	NOT USED		
225	NOT USED		
226	BUSS	J6-6	E12
227	BUSS	J6-7	XF1-1
228	NOT USED		
229	WHITE	J6-9	TB1-20

Table 6-1. Wire Run List (Sheet 6 of 12)

Wire No.	Color	From	To
230	WHITE	A3-165	E19
231	NOT USED		
232	BLUE	R1-3	TB1-8
233	WHITE	R3-3	TB1-17
234	NOT USED		
235	WHITE	R5-3	TB1-12
236	WHITE	R7-2	S5B-10
237	NOT USED		
238	COAX	R10-2	S1E-3
238-SHLD		E4	S1E-1
239	NOT USED		
240	NOT USED		
241	NOT USED		
242	NOT USED		
243	RED	R14-3	A3-112
244	NOT USED		
245	BLACK	M1-1	E9
246	BLACK	S1A-2	TB1-7
247	NOT USED		
248	COAX	A9-485	S8C-12
248-SHLD		A9-484	S8C-3
249	WHITE	A3-166	E51
250	WHITE	S8C-6	S1C-2
251	BLACK	S1C-3	TB1-6
252	BLUE	S1D-7	TB1-9
253	WHITE	S1D-8	S8D-12
254	NOT USED		
255	NOT USED		
256	WHITE	S1D-11	A9-498
257	WHITE	S1D-12	TB1-19
258	NOT USED		
259	WHITE	S5B-6	P3-A
260	NOT USED		
261	WHITE	S5A-6	P3-B
262	NOT USED		
263	NOT USED		
264	NOT USED		
265	WHITE	S5A-1	P3-10
266	NOT USED		
267	NOT USED		
268	WHITE	S5B-1	P3-3
269	NOT USED		
270	NOT USED		
271	NOT USED		
272	NOT USED		

Table 6-1. Wire Run List (Sheet 7 of 12)

Wire No.	Color	From	To
273	NOT USED		
274	NOT USED		
275	NOT USED		
276	NOT USED		
277	NOT USED		
278	GRAY	TB1-14	P3-12
279	NOT USED		
280	BLUE	TB1-10	P3-7
281	NOT USED		
282	NOT USED		
283	NOT USED		
284	BLACK	TB1-6	P3-K
285	NOT USED		
286	GREEN	TB1-15	P3-F
287	NOT USED		
288	WHITE	A10-6	P4-1
289	NOT USED		
290	WHITE	A10-7	P4-A
291	NOT USED		
292	NOT USED		
293	NOT USED		
294	GREEN	S5A-2	S5B-8
295	GREEN	S5A-2	S5A-5
296	BLACK	S5A-4	S5B-7
297	BUSS	S5A-3	S5A-4
298	BLUE	S5B-2	S5B-5
299	GRAY	TB1-14	S5B-4
300	BUSS	S5B-3	S5B-4
301	NOT USED		
302	BLUE	TB1-10	S5B-5
303	BLACK	TB1-5	S5B-7
304	BLACK	S5B-7	S5B-9
305	GREEN	TB1-16	S5B-8
306	BUSS	S6-8	S6-9
307	NOT USED		
308	NOT USED		
309	NOT USED		
310	NOT USED		
311	NOT USED		
312	NOT USED		
313	NOT USED		
314	NOT USED		
315	NOT USED		
316	NOT USED		
317	NOT USED		

Table 6-1. Wire Run List (Sheet 8 of 12)

Wire No.	Color	From	To
318	NOT USED		
319	NOT USED		
320	NOT USED		
321	NOT USED		
322	NOT USED		
323	NOT USED		
324	NOT USED		
325	NOT USED		
326	NOT USED		
327	NOT USED		
328	NOT USED		
329	NOT USED		
330	NOT USED		
331	NOT USED		
332	NOT USED		
333	NOT USED		
334	NOT USED		
335	NOT USED		
336	NOT USED		
337	NOT USED		
338	NOT USED		
339	NOT USED		
340	NOT USED		
341	NOT USED		
342	NOT USED		
343	NOT USED		
344	NOT USED		
345	NOT USED		
346	NOT USED		
347	WHITE	A9-478	A8-462
348	WHITE	A9-480	S6-5
349	WHITE	A9-479	S6-9
350	NOT USED		
351	NOT USED		
352	NOT USED		
353	WHITE	A8-469	S8G-7
354	NOT USED		
355	WHITE	A8-470	S8H-7
356	NOT USED		
357	NOT USED		
358	NOT USED		
359	NOT USED		
360	NOT USED		
361	NOT USED		
362	NOT USED		

Table 6-1. Wire Run List (Sheet 9 of 12)

Wire No.	Color	From	To
363	NOT USED		
364	NOT USED		
365	NOT USED		
366	NOT USED		
367	NOT USED		
368	NOT USED		
369	NOT USED		
370	NOT USED		
371	NOT USED		
372	NOT USED		
373	NOT USED		
374	WHITE	Q4-2	C2-1
375	WHITE	XK1-1	A3-166
376	NOT USED		
377	WHITE	XK1-4	A10-5
378	WHITE	XK1-6	A3-163
379	NOT USED		
380	ORANGE	A3-132	A10-3
381	GREEN	A3-106	A5-272
382	BLUE	A3-122	J6-10
383	RED	A9-481	TB1-4
384	NOT USED		
385	BLUE	A9-505	TB1-9
386	GREEN	A9-491	TB1-16
387	COAX	A9-493	A8-465
388	NOT USED		
389	NOT USED		
390	WHITE	TB1-1	R1-1
391	NOT USED		
392	NOT USED		
393	WHITE	A7-355	C43
394	WHITE	A7-356	C45
395	WHITE	L1-1	C37
396	WHITE	A7-360	C39
397	WHITE	A7-361	C38
398	WHITE	A7-362	C42
399	WHITE	A7-363	C40
400	WHITE	A7-364	C41
401	WHITE	A7-365	A7-368
402	WHITE	A7-366	C46
403	WHITE	A7-367	C47
404	RED	A3-115	TB1-2
405	COAX	S1D-1	S8A-6
405-SHLD		S1D-9	S8A-3

Table 6-1. Wire Run List (Sheet 10 of 12)

Wire No.	Color	From	To
406	COAX	S1D-3	S8A-1
406-SHLD		S1D-6	S8A-2
407	NOT USED		
408	NOT USED		
409	NOT USED		
410	NOT USED		
411	NOT USED		
412	NOT USED		
413	NOT USED		
414	RED	A8-401	A8-427
415	BLUE	A8-429	A8-434
416	NOT USED		
417	BLUE	A8-434	A8-451
418	GRAY	A8-432	A8-449
419	WHITE	R9-1	TB1-18
420	WHITE	R9-2	A8-437
421	WHITE	R9-3	TB1-11
422	NOT USED		
423	NOT USED		
424	NOT USED		
425	NOT USED		
426	NOT USED		
427	COAX	A4-212	A9-495
427-SHLD		A4-211	A9-494
428	NOT USED		
429	NOT USED		
430	NOT USED		
431	NOT USED		
432	NOT USED		
433	NOT USED		
434	NOT USED		
435	NOT USED		
436	NOT USED		
437	NOT USED		
438	NOT USED		
439	NOT USED		
440	NOT USED		
441	NOT USED		
442	NOT USED		
443	NOT USED		
444	BUSS	J6-1	E18
445	BUSS	J6-14	E19
446	BUSS	J6-8	E20
447	NOT USED		
448	NOT USED		
449	BUSS	S8A-3	E8
450	NOT USED		
451	NOT USED		
452	NOT USED		
453	NOT USED		

Table 6-1. Wire Run List (Sheet 11 of 12)

Wire No.	Color	From	To
454	NOT USED		
455	NOT USED		
456	NOT USED		
457	WHITE	S8G-1	FL4-3
458	COAX	S8G-11	FL5-1
458-SHLD		FL5-GND	FL5-GND
459	NOT USED		
460	WHITE	S8H-1	FL4-1
461	COAX	S8H-11	FL5-3
461-SHLD		FL4-GND	FL4-GND
462	NOT USED		
463	NOT USED		
464	NOT USED		
465	NOT USED		
466	NOT USED		
467	NOT USED		
468	NOT USED		
469	NOT USED		
470	NOT USED		
471	NOT USED		
472	NOT USED		
473	NOT USED		
474	NOT USED		
475	1/8" BRAID	FL5-2	I.F. GND
476	WHITE	A10-1	S1C-5
477	WHITE	A10-4	S1C-6
478	1/8" BRAID	FL4-2	I.F. GND
479	WHITE	A7-352	E55
480	WHITE	A7-354	E56
481	WHITE	A7-358	E57
482	NOT USED		
483	ORANGE	A3-132	A9-507
484	GRAY	A9-508	TB1-13
485	NOT USED		
486	NOT USED		
487	NOT USED		
488	NOT USED		
489	WHITE	A5-271	A6-338
490	NOT USED		
491	BUSS	A10A1S1A-4	A10A2S1C-WIPER
492	BUSS	A10A1S1A-5	A10A1C2
493	BUSS	A10A1S1A-WIPER	A10A2-32
494	BUSS	A10A1S1B-4	A10A2S1A-WIPER
495	BUSS	A10A1S1B-5	A10A1C1
496	BUSS	A10A1S1B-WIPER	E29
497	WHITE	A7-353	GND LUG

Table 6-1. Wire Run List (Sheet 12 of 12)

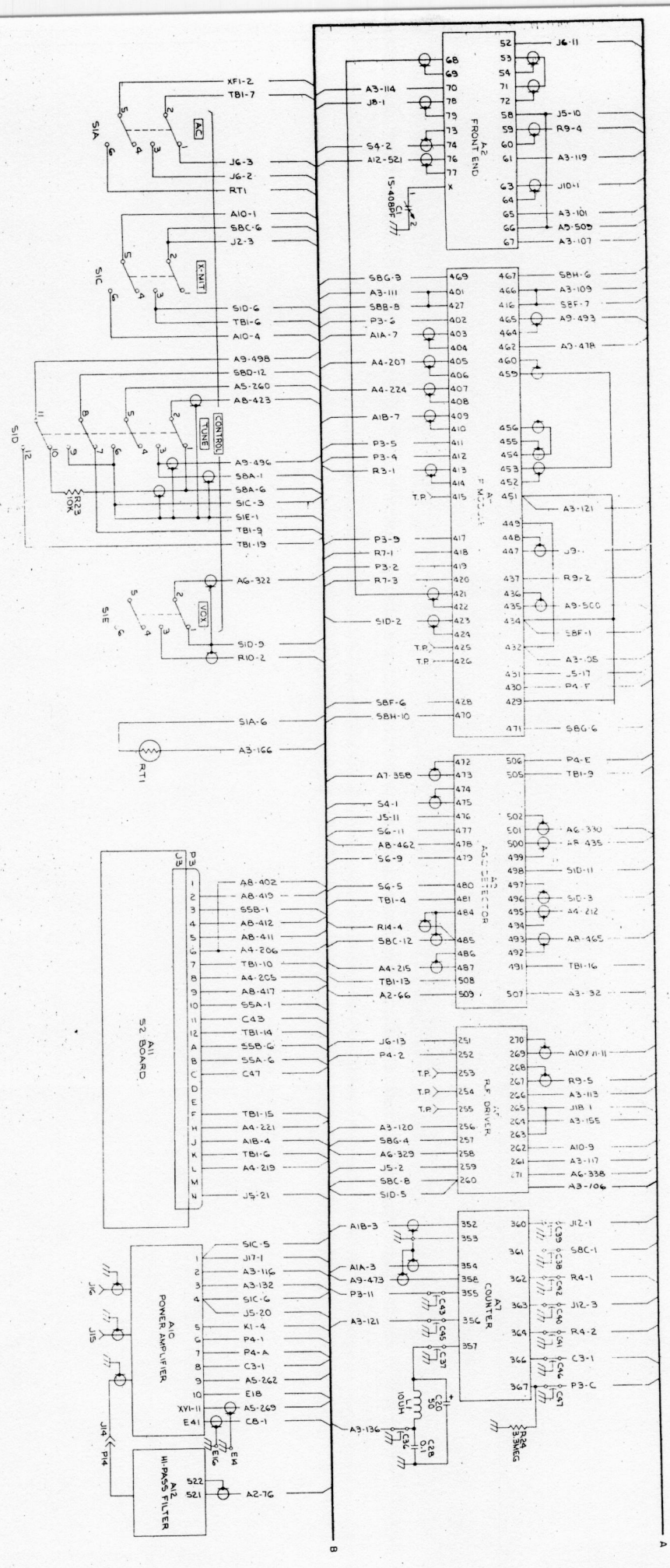

Figure 6-1. Deluxe Integrated Station Model CX7 Schematic Diagram (Sheet 1 of 4)

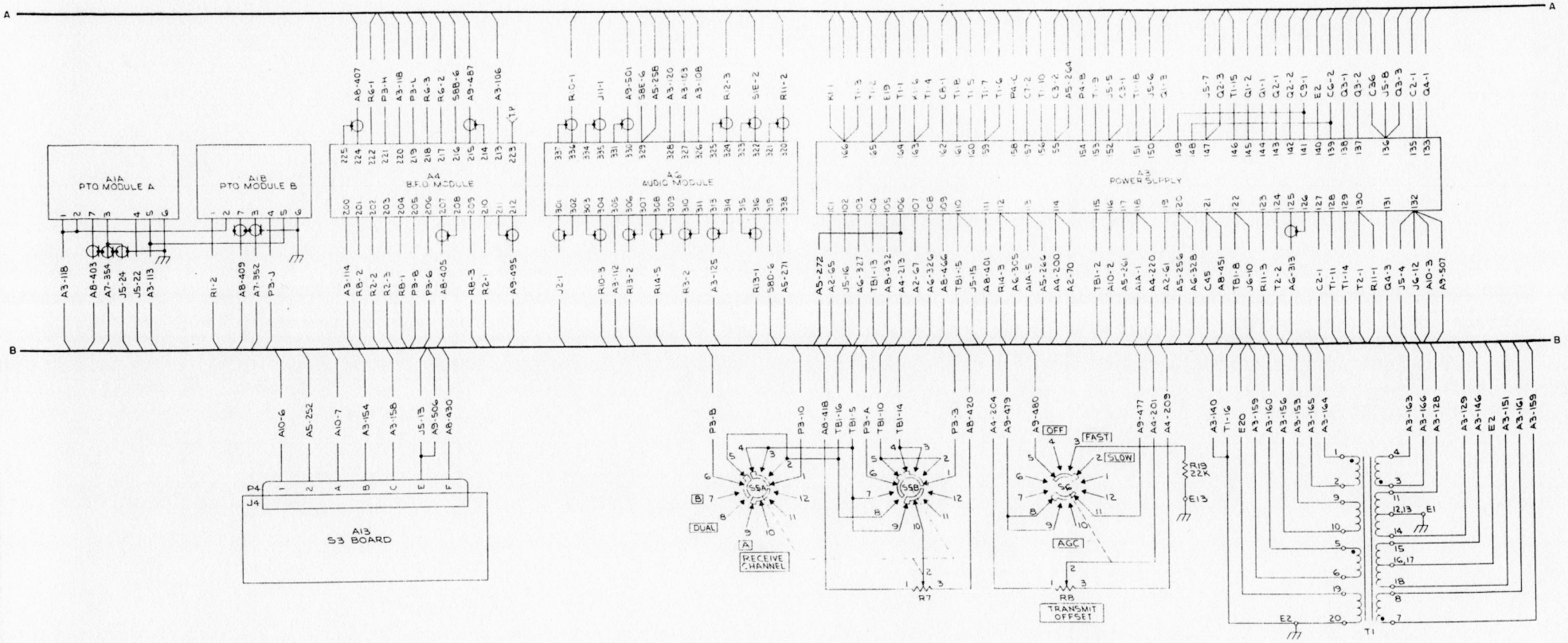

Figure 6-1. Deluxe Integrated Station Model CX7 Schematic Diagram (Sheet 2 of 4)

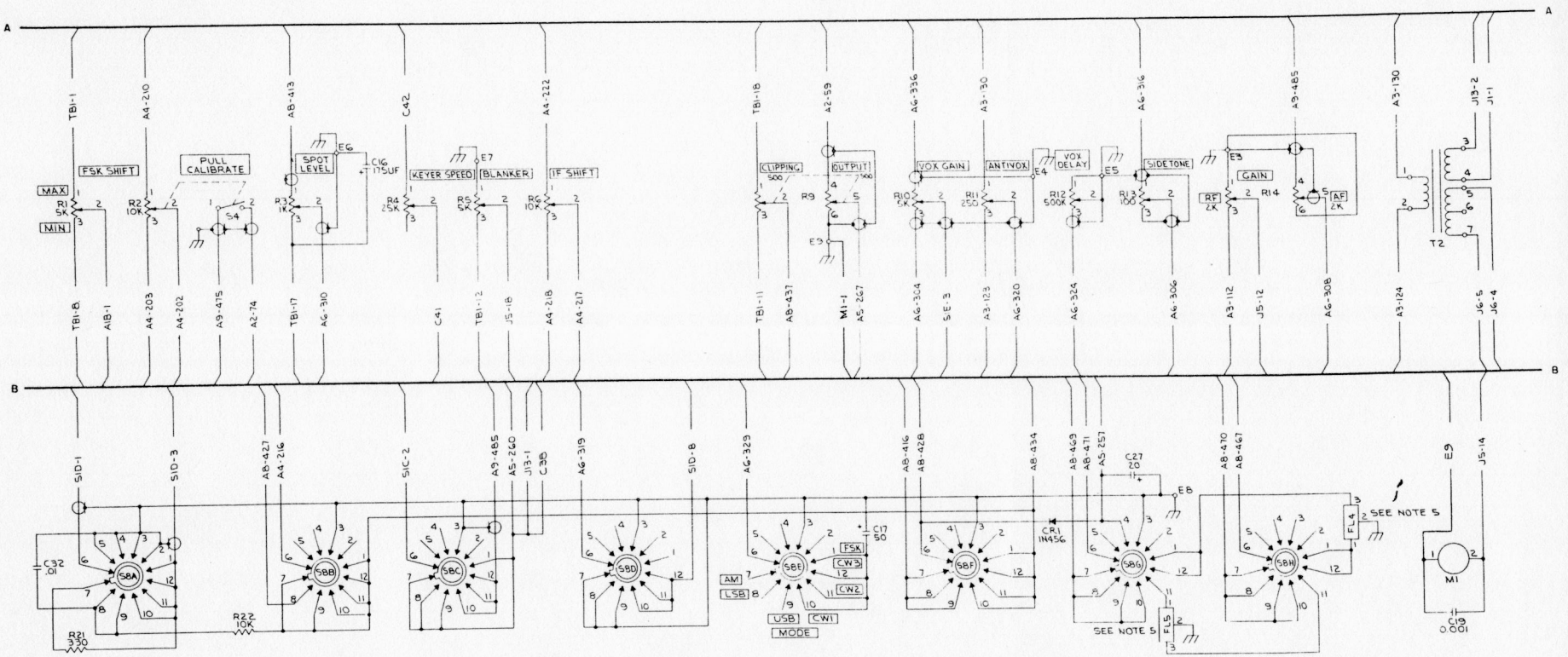

Figure 6-1. Deluxe Integrated Station Model CX7 Schematic Diagram (Sheet 3 of 4)

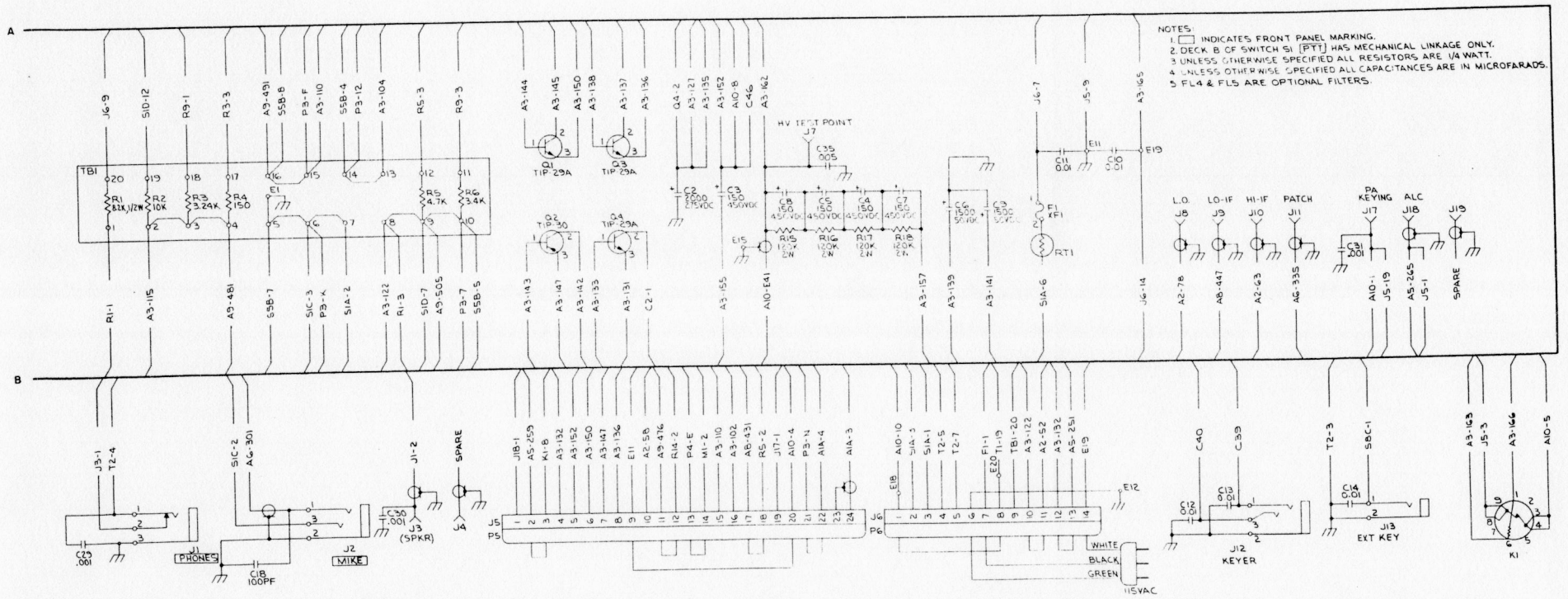

Figure 6-1. Deluxe Integrated Station Model CX7 Schematic Diagram (Sheet 4 of 4)

NOTES:

1. UNLESS OTHERWISE SPECIFIED ALL DECIMAL VALUE CAPACITORS ARE IN UF.
2. UNLESS OTHERWISE SPECIFIED ALL WHOLE VALUE CAPACITORS ARE IN PF.
3. ALL UNMARKED RESISTORS ARE 1/4 WATT.
4. THESE COMPONENTS NOT PART OF P.C. BOARD.

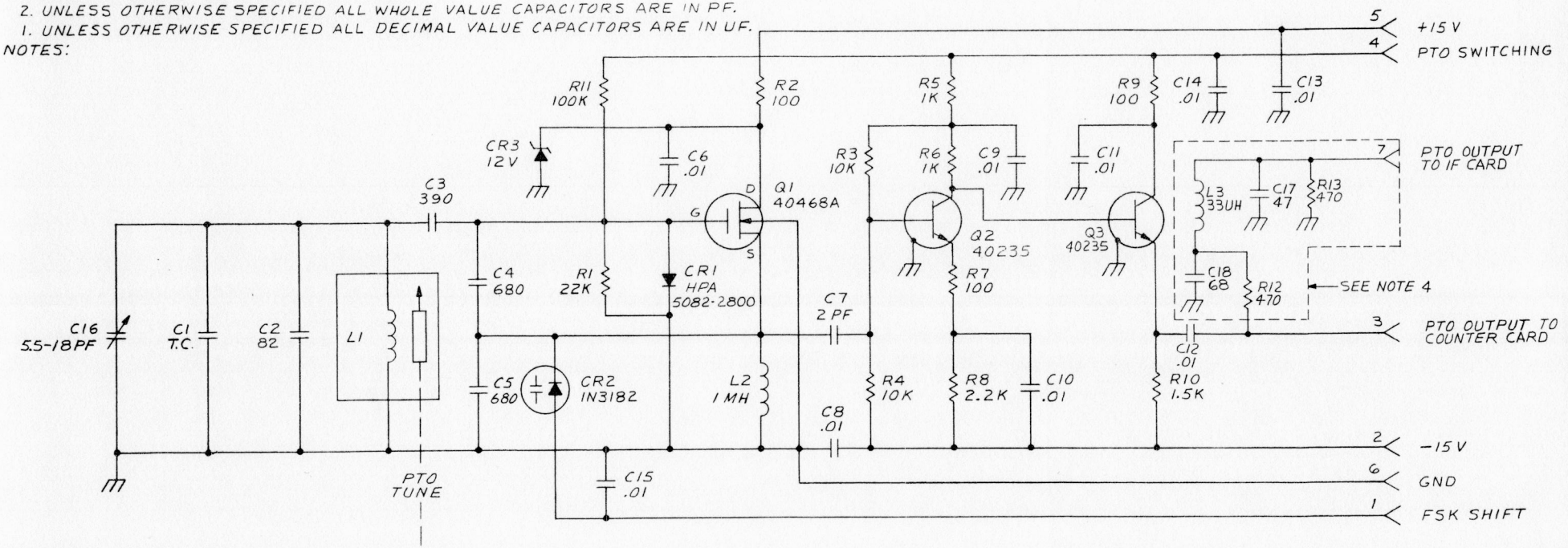

Figure 6-2. PTO Module A1 Schematic Diagram

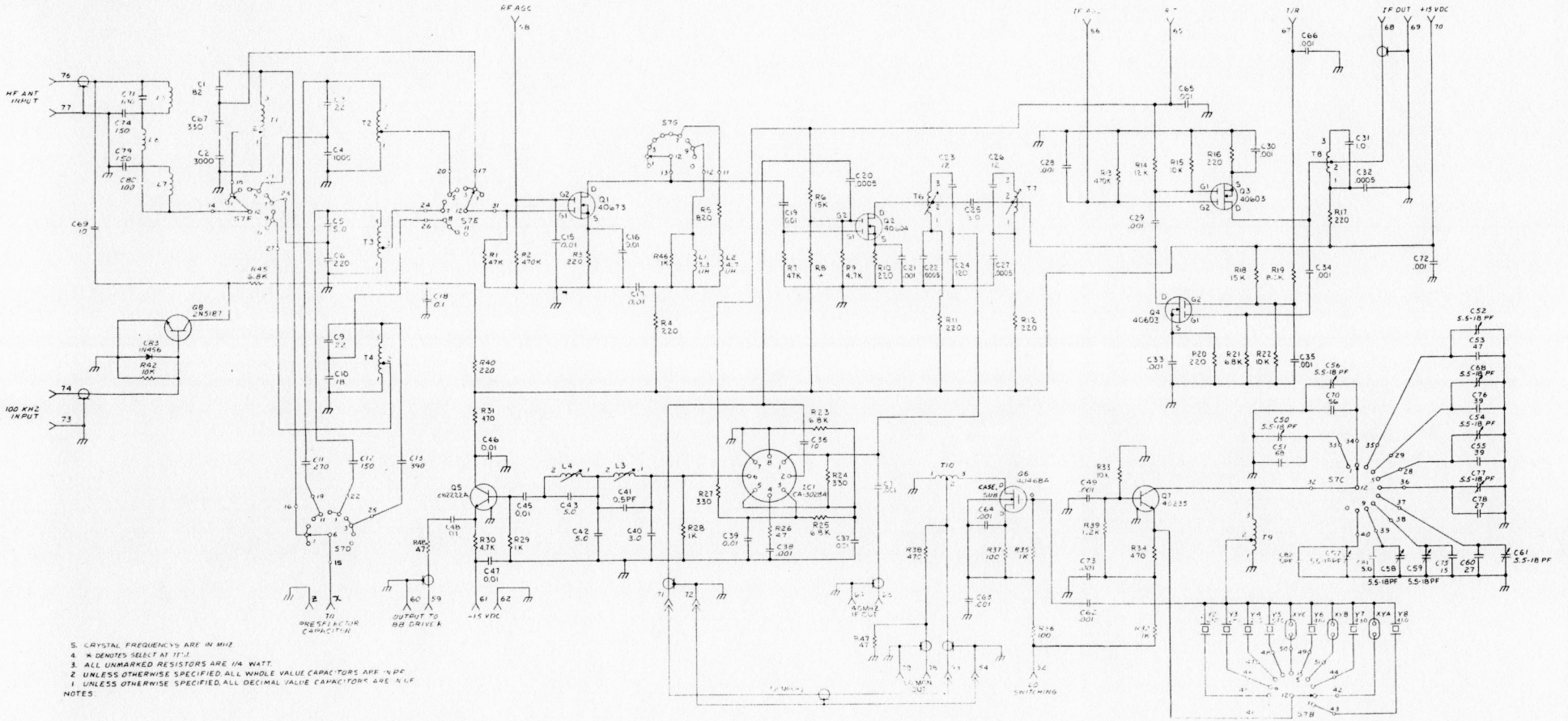

Figure 6-3. Front End Board A2 Schematic Diagram

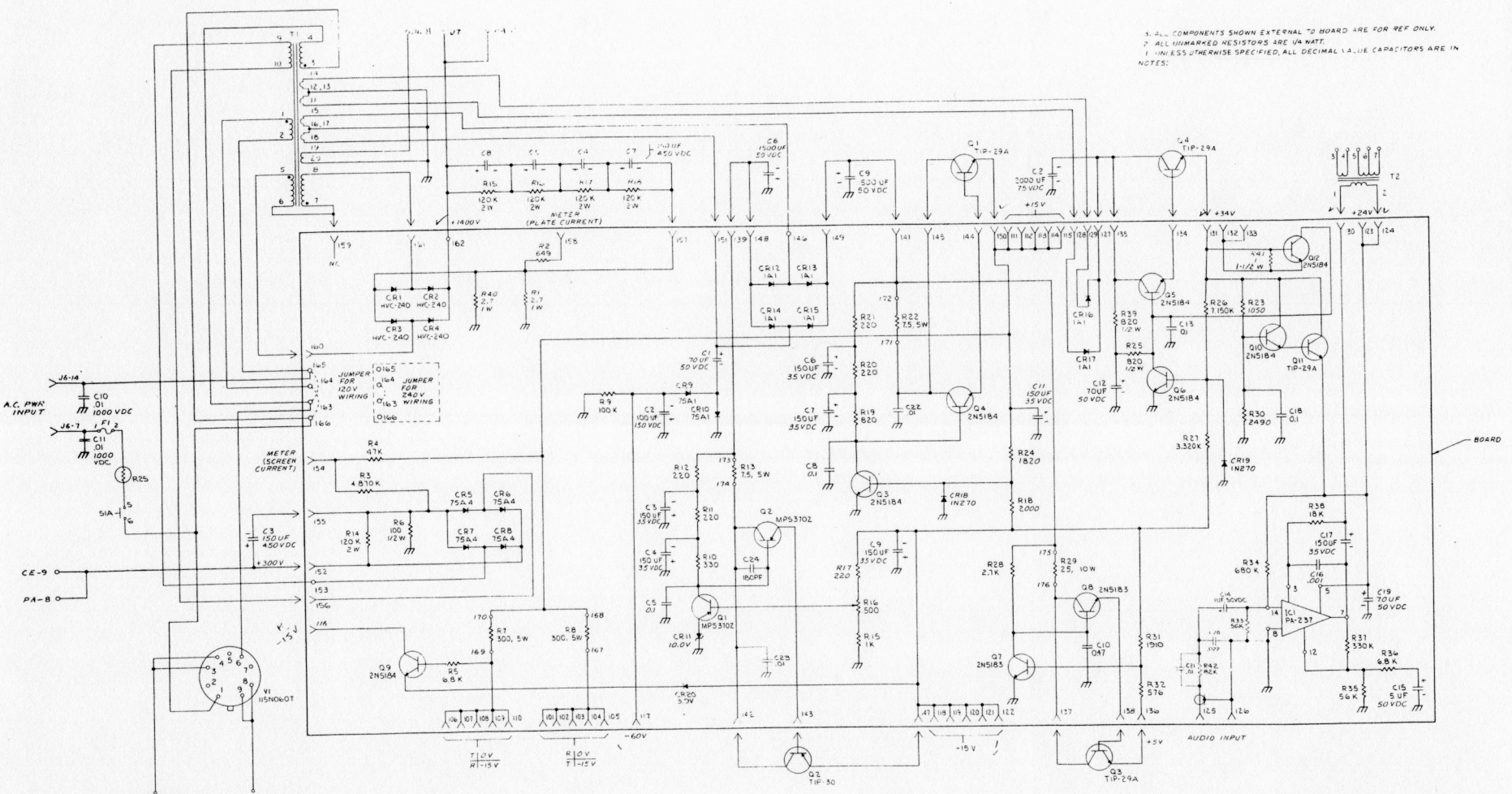

Figure 6-4. Power Supply Board A3 Schematic Diagram

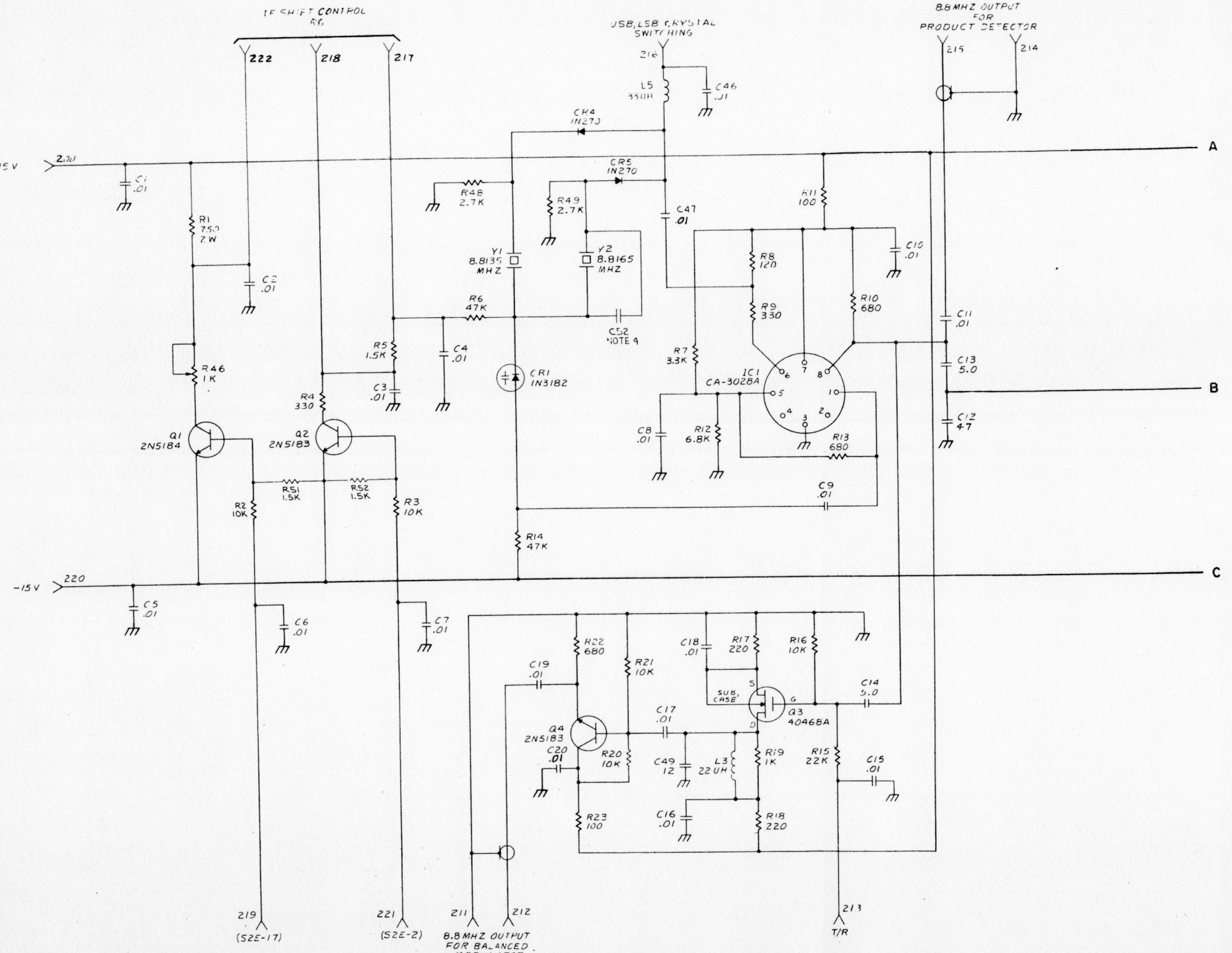
IF SHIFT CONTROL R6
222
218
217
USB, LSB CRYSTAL SWITCHING
216
L5 330UH
C46 .01
CR4 IN270
CR5 IN270
8.8 MHZ OUTPUT FOR PRODUCT DETECTOR
215
214
+15 V
200
A
C1 .01
R1 750 2W
C2 .01
R48 2.7K
R49 2.7K
C47 .01
R11 100
Y1 8.8135 MHZ
Y2 8.8165 MHZ
C10 .01
R8 120
R9 330
R10 680
R6 47K
C52 NOTE 9
C11 .01
C13 5.0
B
C12 4.7
R5 1.5K
C4 .01
CR1 IN3182
R7 3.3K
IC1 CA-3028A
R46 1K
C3 .01
R4 330
C8 .01
R12 6.8K
R13 680
Q1 2N5184
Q2 2N5183
R51 1.5K
R52 1.5K
C9 .01
R2 10K
R3 10K
R14 47K
-15 V
220
C
C5 .01
C6 .01
C7 .01
R22 680
R21 10K
C18 .01
R17 220
R16 10K
C19 .01
SUB CASE
C14 5.0
Q3 40468A
C17 .01
Q4 2N5183
C20 .01
R20 10K
C49 12
L3 22 UH
R19 1K
R15 22K
C15 .01
R23 100
C16 .01
R18 220
219
(S2E-17)
221
(S2E-2)
211
212
8.8 MHZ OUTPUT FOR BALANCED MODULATOR
213
T/R

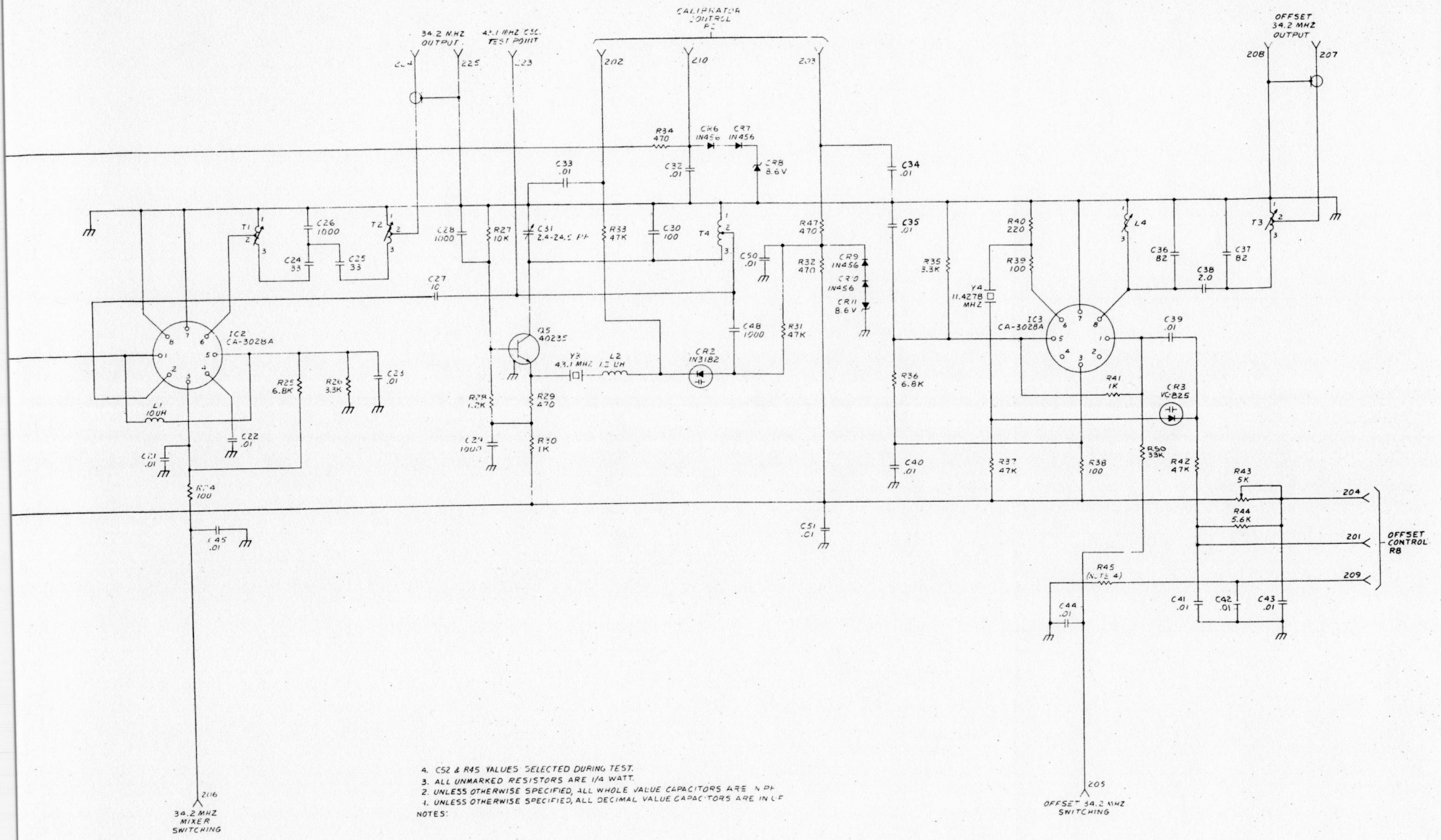

NOTES:
1. UNLESS OTHERWISE SPECIFIED, ALL DECIMAL VALUE CAPACITORS ARE IN UF
2. UNLESS OTHERWISE SPECIFIED, ALL WHOLE VALUE CAPACITORS ARE IN PF
3. ALL UNMARKED RESISTORS ARE 1/4 WATT.
4. C52 & R45 VALUES SELECTED DURING TEST.

Figure 6-5. BFO Board A4 Schematic Diagram (Sheet 2 of 2)

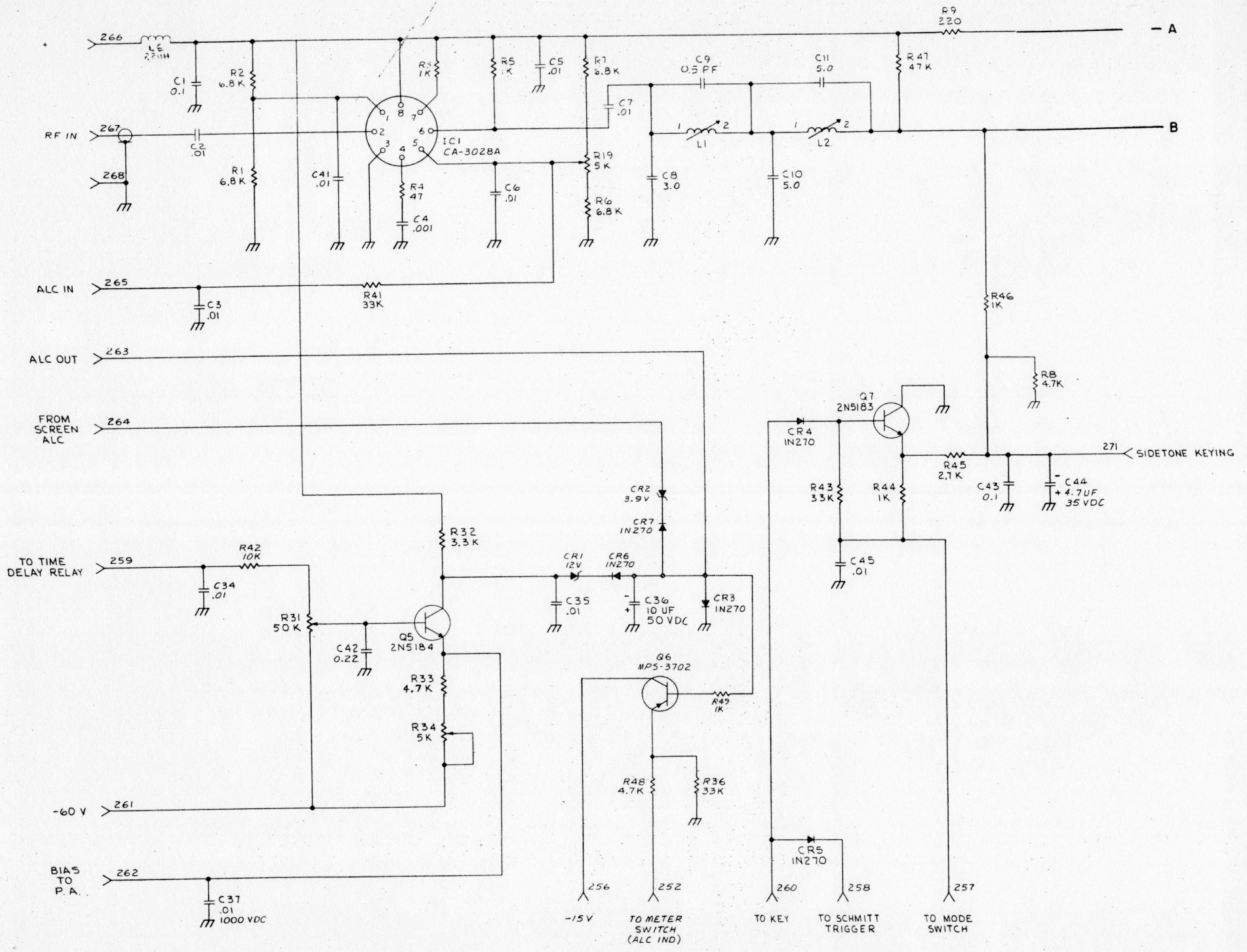

Figure 6-6. RF Driver Board A5 Schematic Diagram (Sheet 1 of 2)

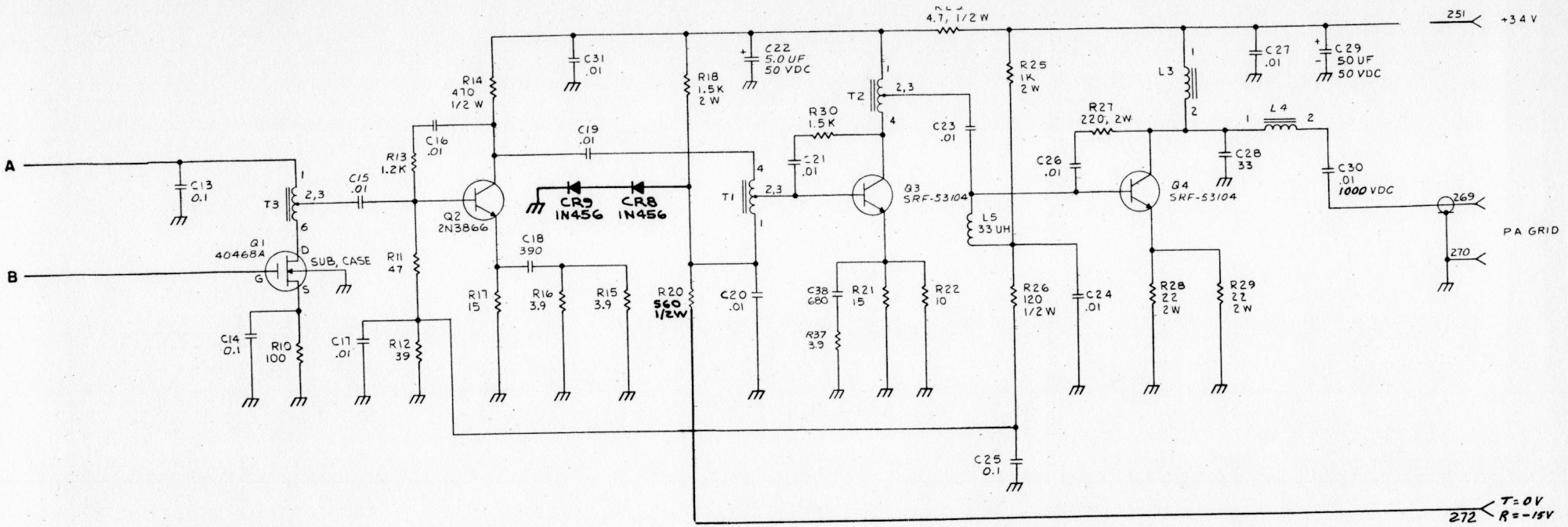

4. Q5 AND Q6, SHOWN FOR REFERENCE ONLY, ARE MOUNTED ON CHASSIS. LEADS CONNECT TO TERMINALS ON BOARD.
3. ALL UNMARKED RESISTORS ARE 1/4 WATT.
2. UNLESS OTHERWISE SPECIFIED, ALL WHOLE VALUE CAPACITORS ARE IN PF.
1. UNLESS OTHERWISE SPECIFIED, ALL DECIMAL VALUE CAPACITORS ARE IN UF.

NOTES:

Figure 6-6. RF Driver Board A5 Schematic Diagram (Sheet 2 of 2)

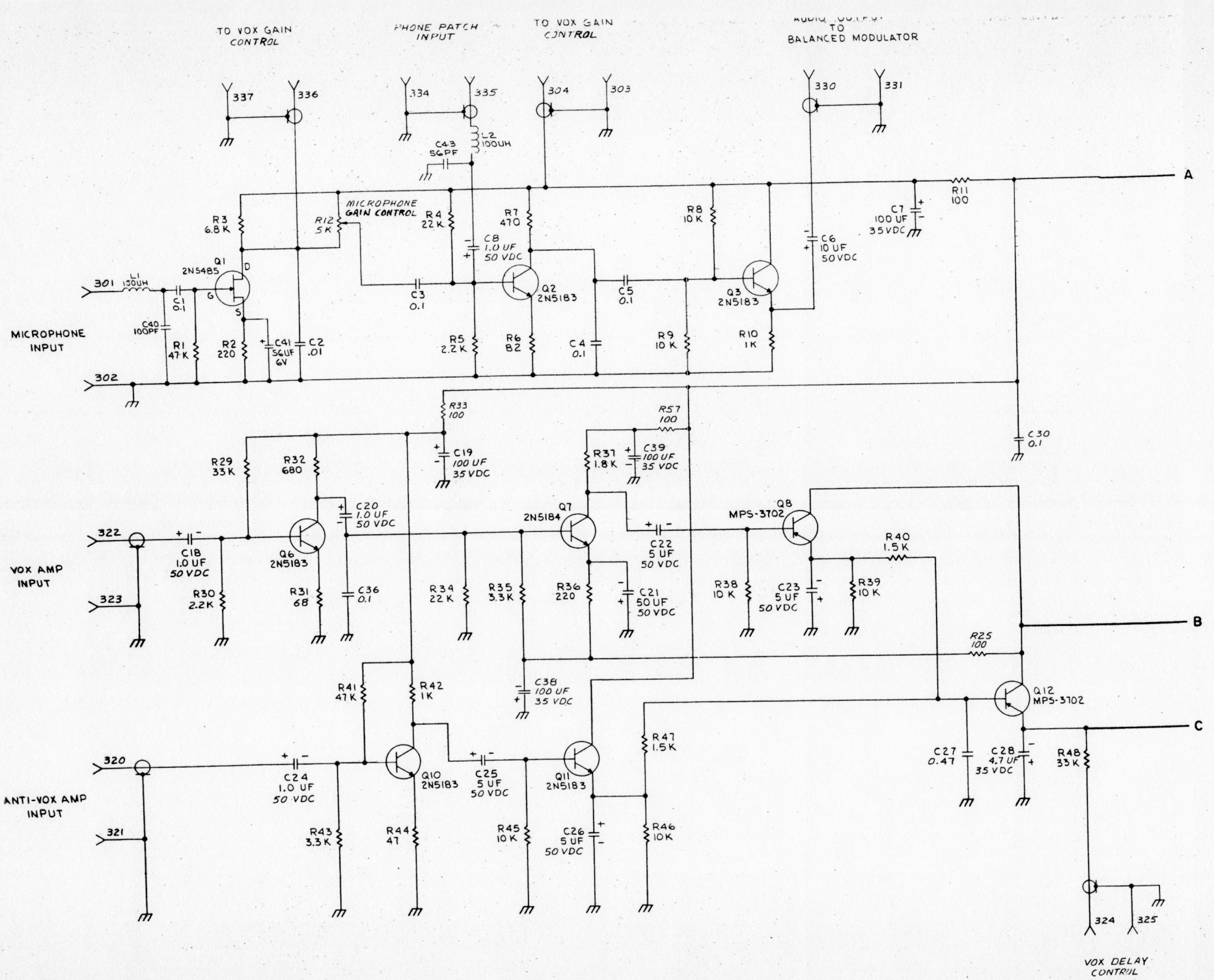
TO VOX GAIN CONTROL
PHONE PATCH INPUT
TO VOX GAIN CONTROL
AUDIO OUTPUT TO BALANCED MODULATOR
337
336
334
335
304
303
330
331
C43 56PF
L2 100UH
A
R11 100
C7 100 UF 35 VDC
C6 10 UF 50 VDC
R3 6.8 K
R12 5K
MICROPHONE GAIN CONTROL
R4 22 K
R7 470
R8 10 K
C8 1.0 UF 50 VDC
Q1 2N5485
Q2 2N5183
Q3 2N5183
301
L1 100UH
C1 0.1
C3 0.1
C5 0.1
MICROPHONE INPUT
C40 100PF
R1 47 K
R2 220
C41 56UF 6V
C2 .01
R5 2.2 K
R6 82
C4 0.1
R9 10 K
R10 1K
302
R33 100
R57 100
C30 0.1
C19 100 UF 35 VDC
R29 33 K
R32 680
R31 1.8 K
C39 100 UF 35 VDC
C20 1.0 UF 50 VDC
Q7 2N5184
Q8 MPS-3702
322
C18 1.0 UF 50 VDC
Q6 2N5183
C22 5 UF 50 VDC
R40 1.5 K
VOX AMP INPUT
323
R30 2.2K
R31 68
C36 0.1
R34 22 K
R35 3.3K
R36 220
C21 50 UF 50 VDC
R38 10 K
C23 5 UF 50 VDC
R39 10 K
B
R25 100
R41 47 K
R42 1K
C38 100 UF 35 VDC
Q12 MPS-3702
C
320
C24 1.0 UF 50 VDC
Q10 2N5183
C25 5 UF 50 VDC
Q11 2N5183
R47 1.5K
C27 0.47
C28 4.7 UF 35 VDC
R48 33 K
ANTI-VOX AMP INPUT
321
R43 3.3K
R44 47
R45 10 K
C26 5 UF 50 VDC
R46 10K
324
325
VOX DELAY CONTROL

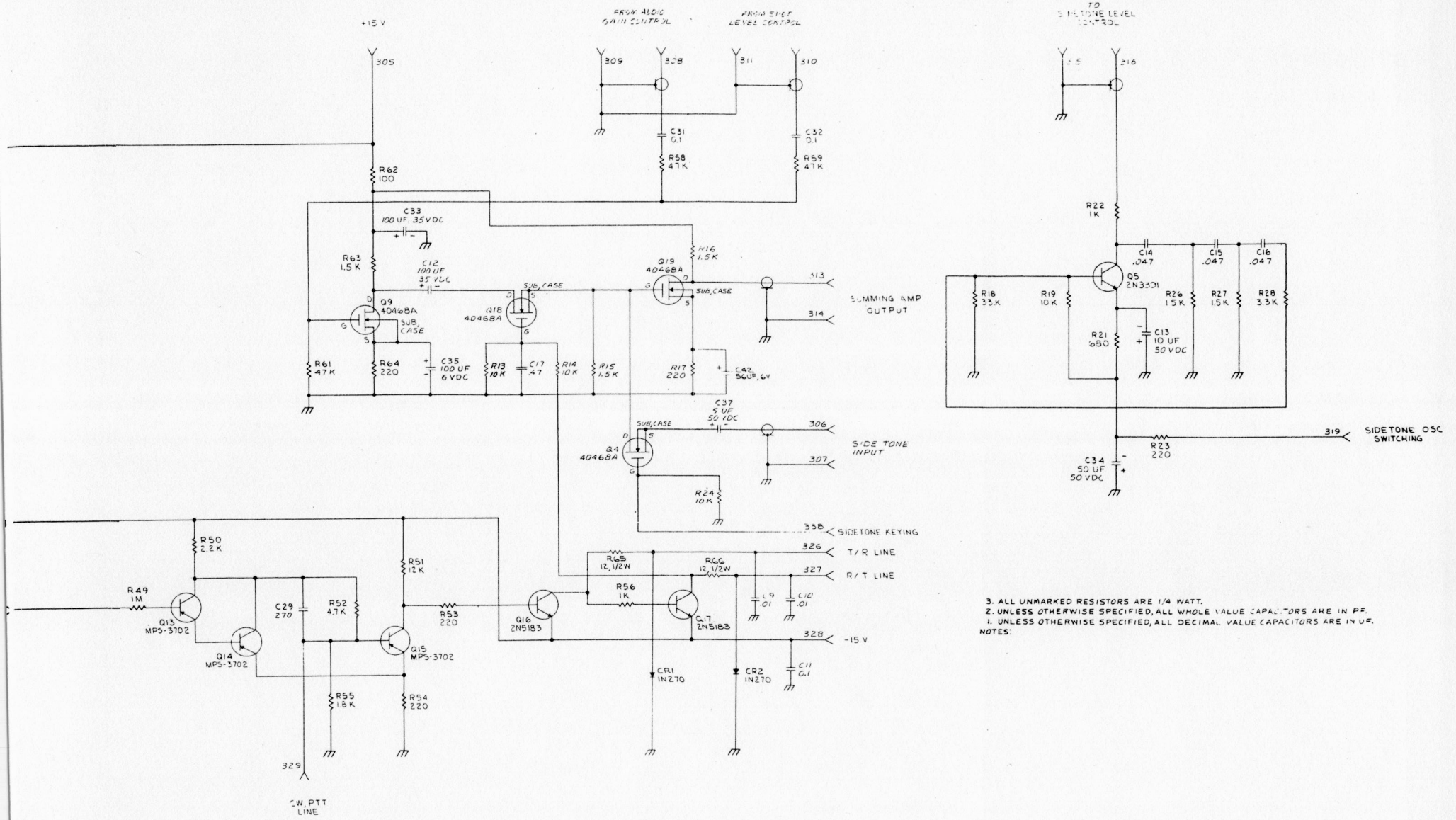

NOTES:
1. UNLESS OTHERWISE SPECIFIED, ALL DECIMAL VALUE CAPACITORS ARE IN UF.
2. UNLESS OTHERWISE SPECIFIED, ALL WHOLE VALUE CAPACITORS ARE IN PF.
3. ALL UNMARKED RESISTORS ARE 1/4 WATT.

Figure 6-7. Audio Board A6 Schematic Diagram (Sheet 2 of 2)

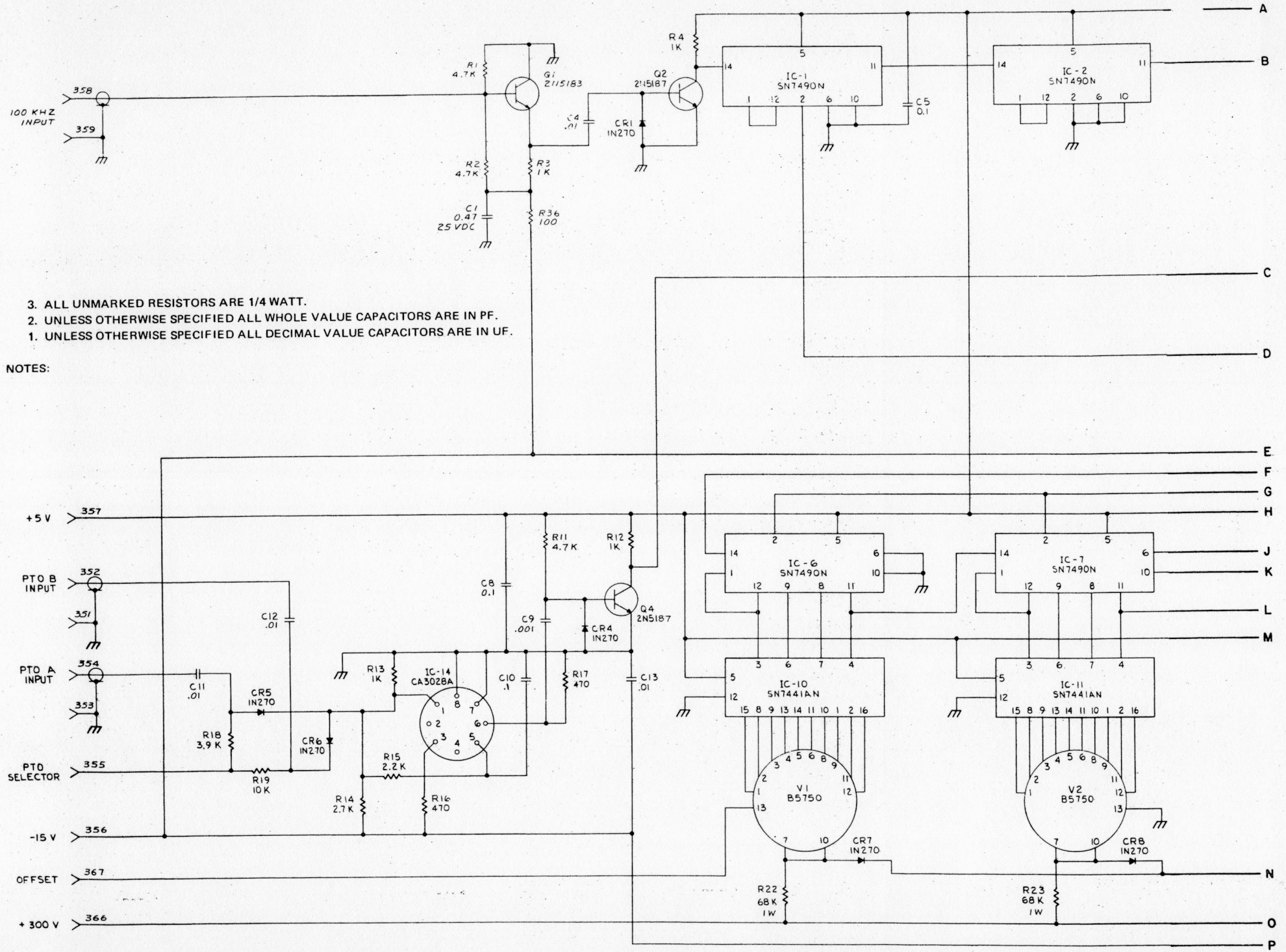

Figure 6-8. Counter Board A7 Schematic Diagram (Sheet 1 of 2)

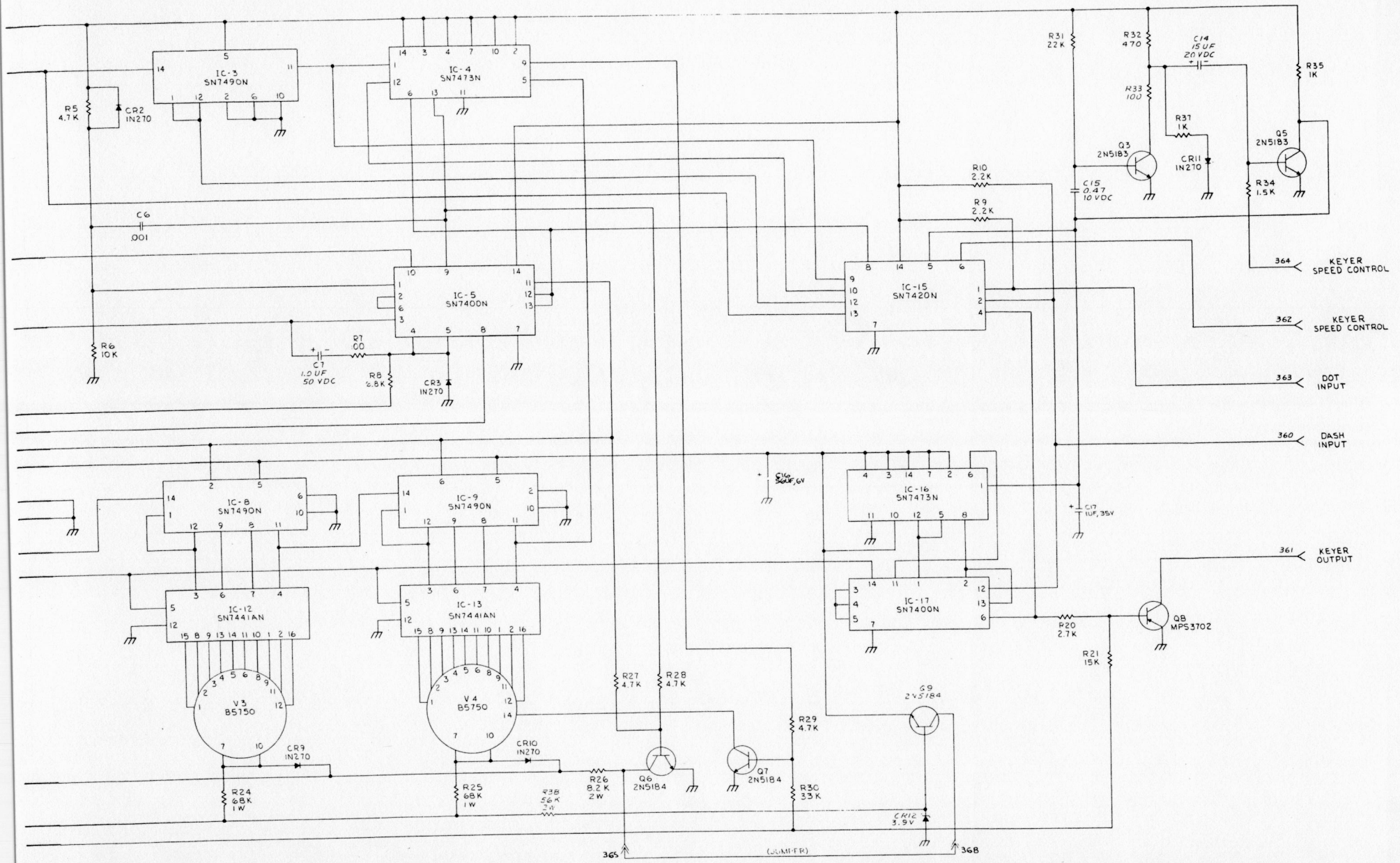

Figure 6-8. Counter Board A7 Schematic Diagram (Sheet 2 of 2)

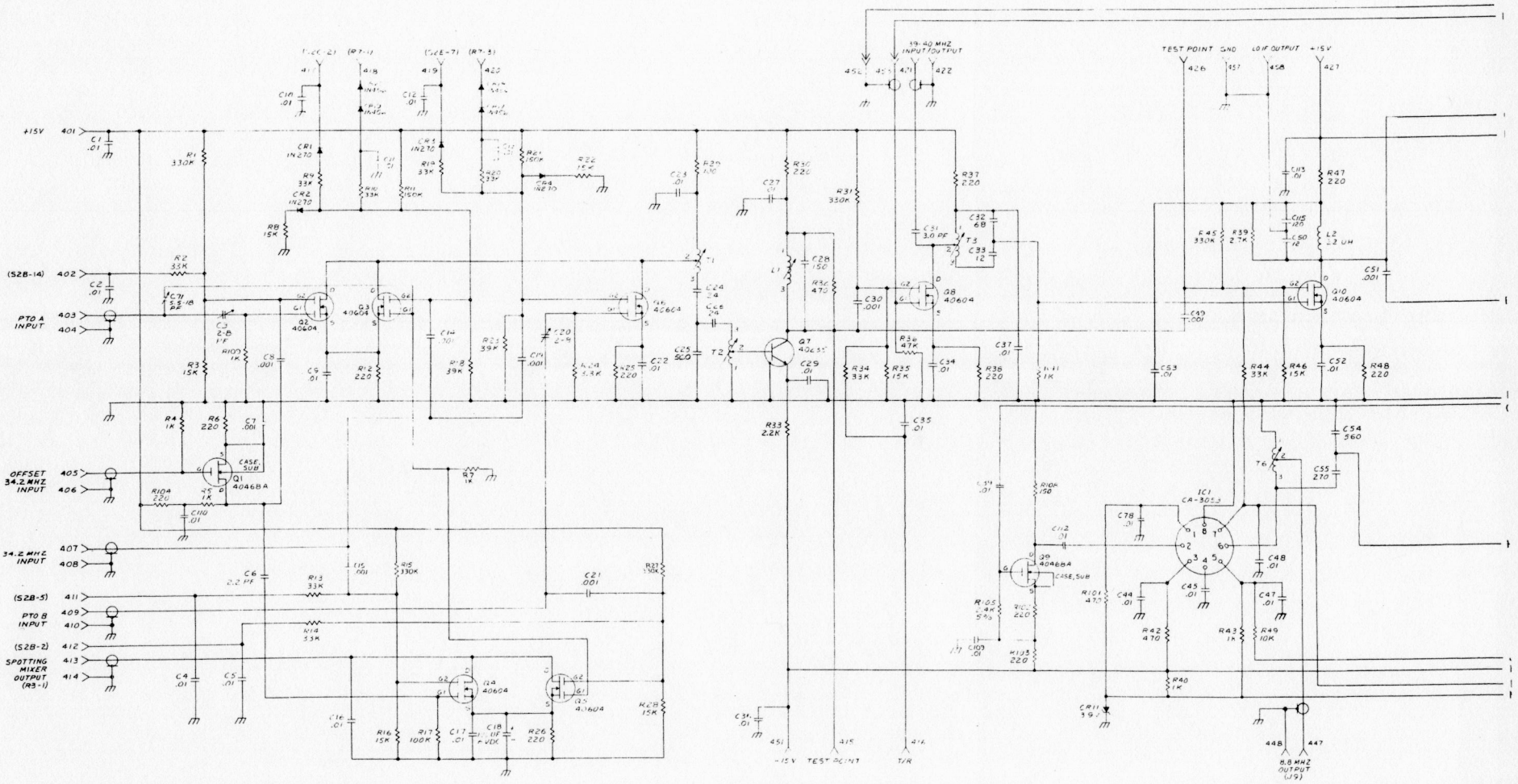

Figure 6-9. IF Board A8 Schematic Diagram (Sheet 1 of 2)

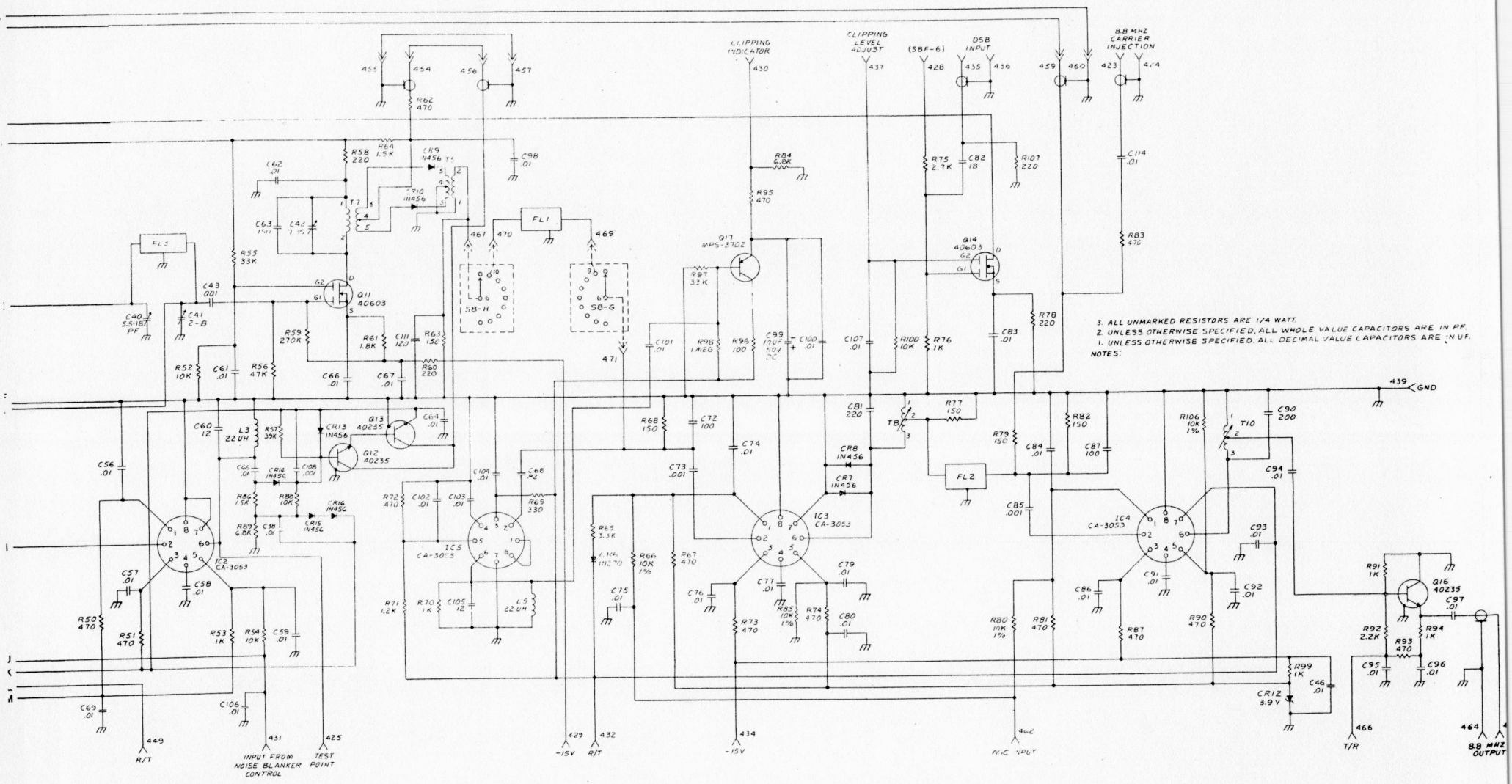

Figure 6-9. IF Board A8 Schematic Diagram (Sheet 2 of 2)

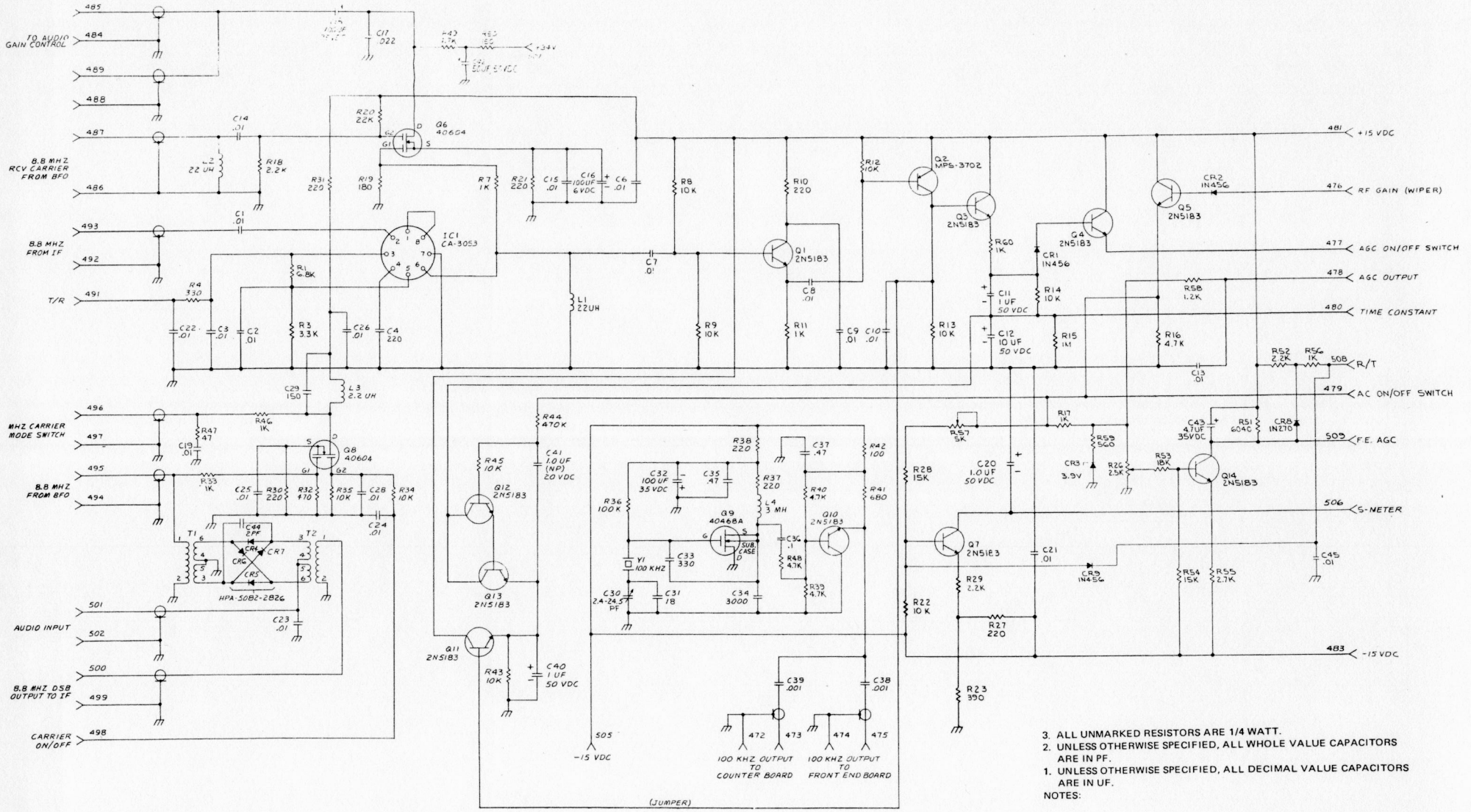

3. ALL UNMARKED RESISTORS ARE 1/4 WATT.
2. UNLESS OTHERWISE SPECIFIED, ALL WHOLE VALUE CAPACITORS ARE IN PF.
1. UNLESS OTHERWISE SPECIFIED, ALL DECIMAL VALUE CAPACITORS ARE IN UF.

NOTES:

Figure 6-10. AGC Detector Board A9 Schematic Diagram

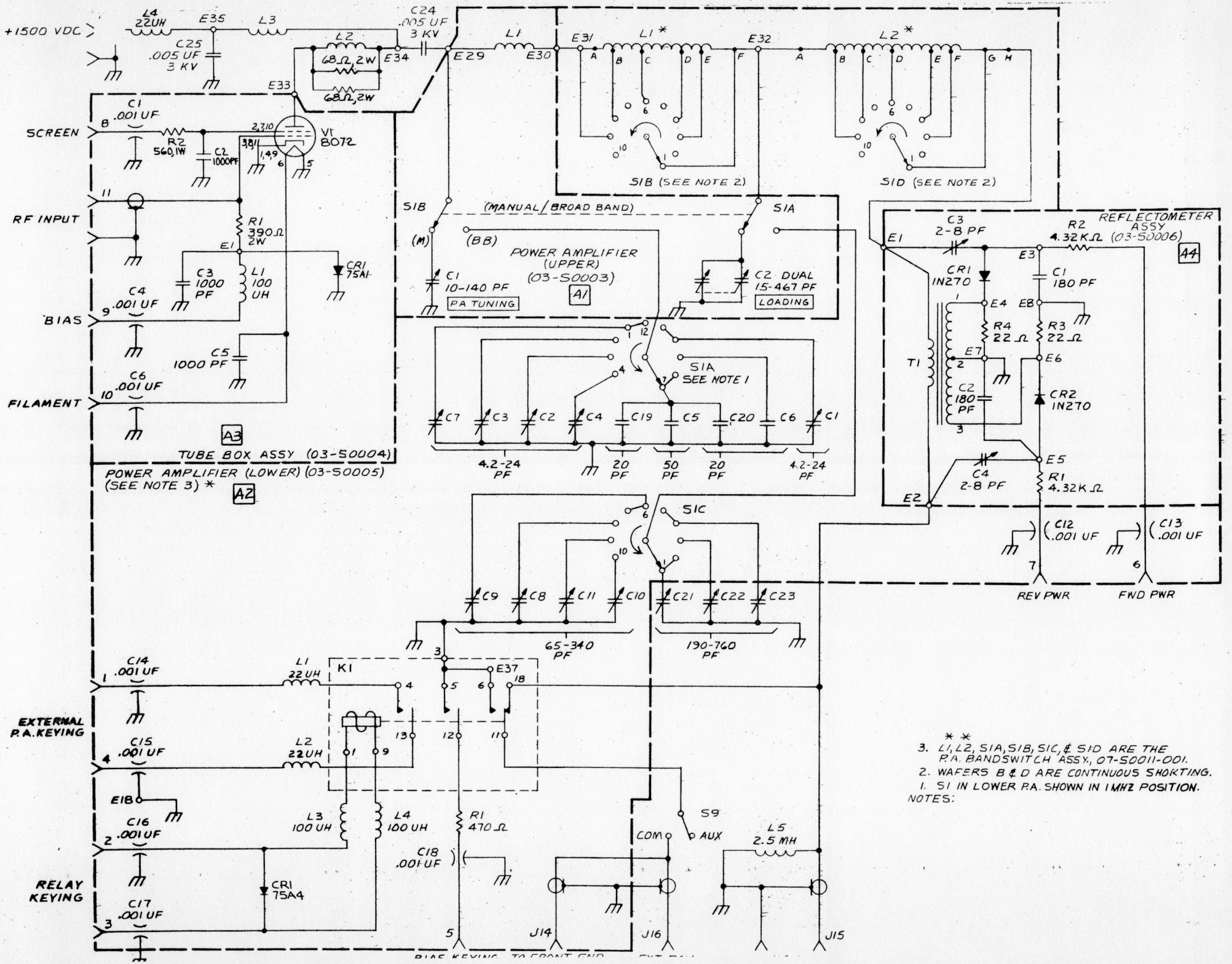

NOTES:

1. S1 IN LOWER P.A. SHOWN IN 1 MHZ POSITION.
2. WAFERS B & D ARE CONTINUOUS SHORTING.
3. L1, L2, S1A, S1B, S1C, & S1D ARE THE P.A. BANDSWITCH ASSY., 07-50011-001.

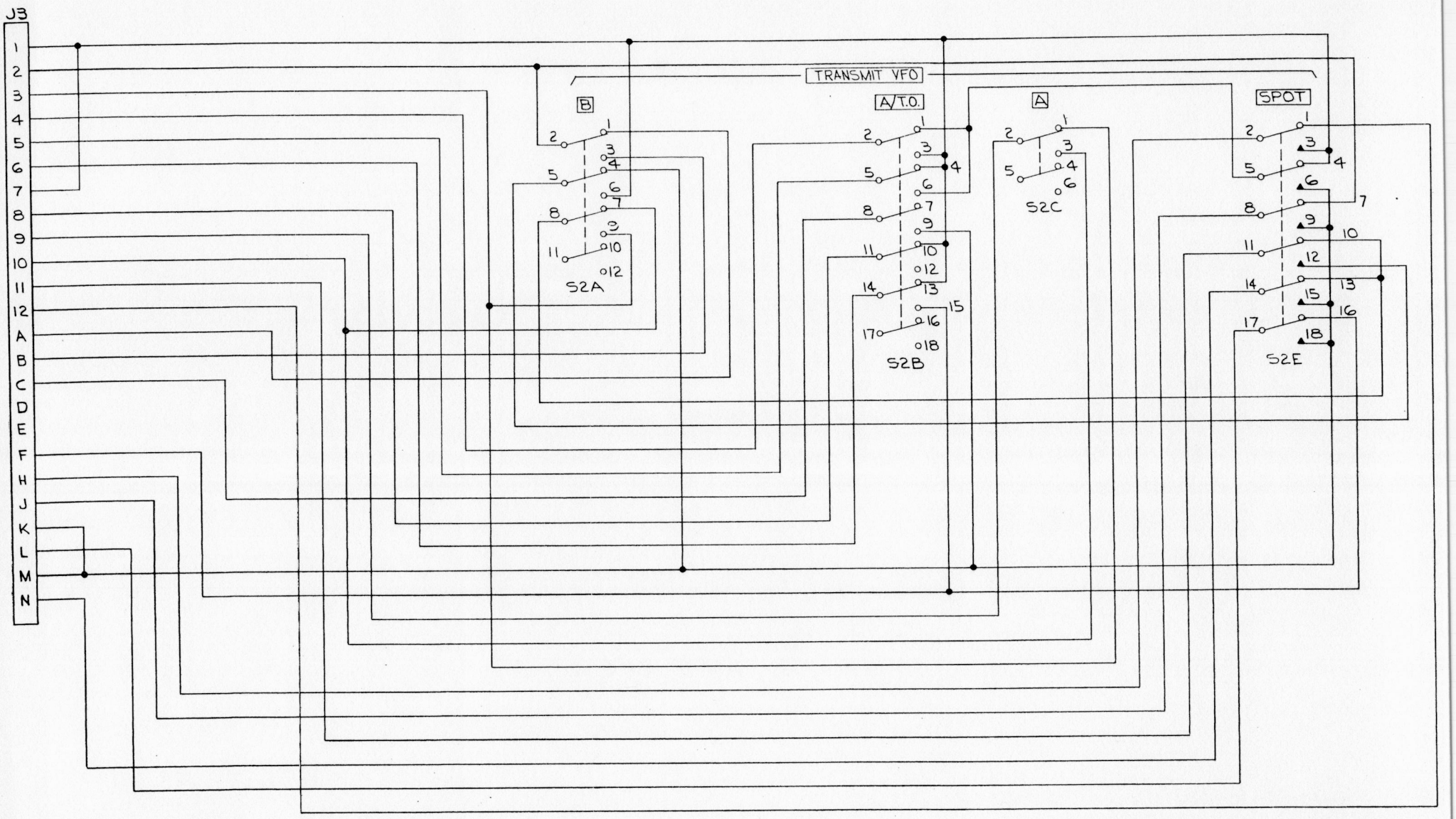

Figure 6-12. S2 Board A11 Schematic Diagram

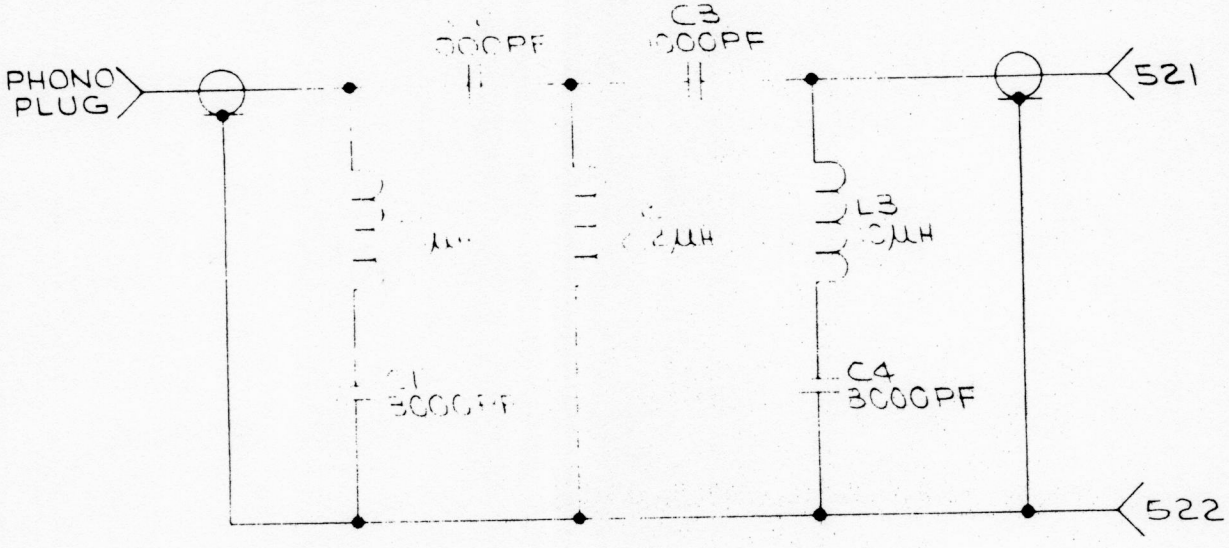

Figure 6-13. High Pass Filter Board A12 Schematic Diagram

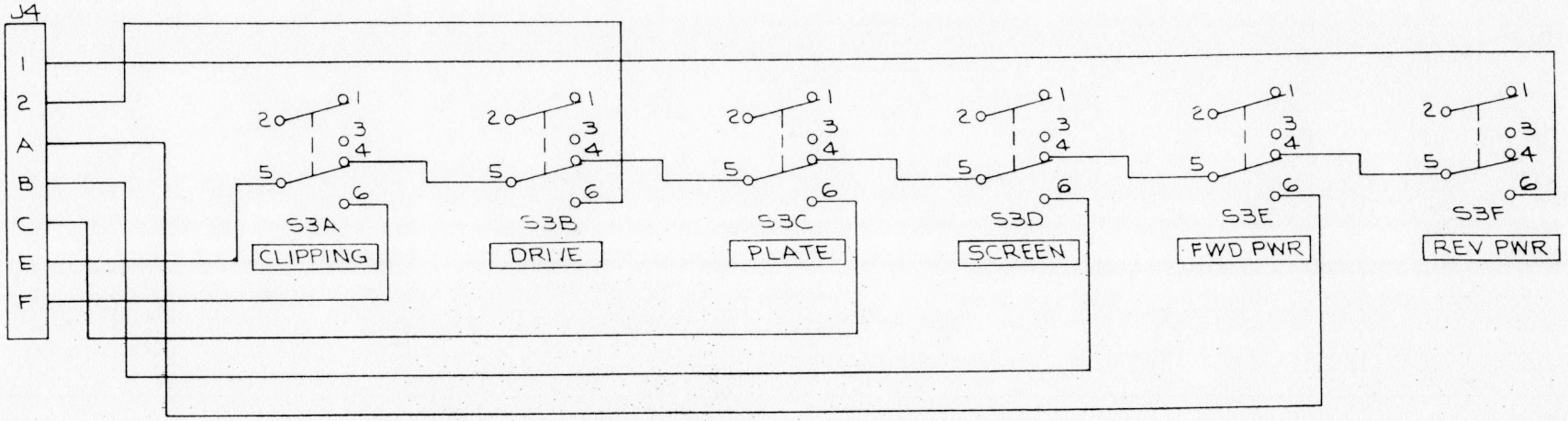

Figure 6-14. S3 Board A13 Schematic Diagram

REF DESIG	NAME AND DESCRIPTION	SIGNAL/ONE PART NO.
	DELUXE INTEGRATED STATION MODEL CX7	
A1A	PTO A MODULE	03-S0001-001
A1B	PTO B MODULE	03-S0001-001
A2	FRONT END BOARD	61-S0002-001
A3	POWER SUPPLY BOARD	61-S0003-001
A4	BFO BOARD	61-S0004-001
A5	RF DRIVER	61-S0005-001
A6	AUDIO BOARD	61-S0006-001
A7	COUNTER BOARD	61-S0007-001
A8	IF BOARD	61-S0008-001
A9	AGC DETECTOR BOARD	61-S0009-001
A10	POWER AMPLIFIER /UPPER/	03-S0003-001
	POWER AMPLIFIER /LOWER/	03-S0005-001
A11	S2 BOARD	61-S0011-001
A12	HI-PASS FILTER BOARD	61-S0012-001
A13	S3 BOARD	61-S0013-001
C1	CAPACITOR, VARIABLE 15 TO 409 PF TRW PART NO. V2461	11-S0017-001
C2	CAPACITOR, FIXED 2000 UF, PORM 10 PCT 75 V MALLORY PART NO. FP-20-23745	11-S0009-003
C3,C5	CAPACITOR, FIXED 150 UF, PORM 10 PCT 450 V SPRAGUE PART NO. TVL-1770	11-S0009-001
C6	CAPACITOR, FIXED 1500 UF, PORM 10 PCT 50 V AEROVOX PART NO. AFH1-14-50	11-S0009-002
C7,C8	CAPACITOR, FIXED SAME AS C3	11-S0009-001
C9	CAPACITOR, FIXED SAME AS C6	11-S0009-002

REF DESIG	NAME AND DESCRIPTION	SIGNAL/ONE PART NO.
C10,C11	CAPACITOR, FIXED 0.01 UF, PORM 10 PCT 1000 V ERIE PART NO. 811-000 Z5U0 103M	11-S0003-021
C12 THRU C15	CAPACITOR, FIXED 0.01 UF, +80, -20 PCT 100 V RMC PART NO. .01 TA +80-20	11-S0005-002
C16	CAPACITOR, FIXED 175 UF, PORM 10 PCT, 25 V MALLORY PART NO. MTA 175F25	11-S0008-030
C17	CAPACITOR, FIXED 50 UF, PORM 10 PCT, 15 V MALLORY PART NO. 50E15	11-S0008-018
C18	CAPACITOR, FIXED MICA 100 PF, PORM 5 PCT, 15 V CDE PART NO. CM05-FD101 J03	11-S0001-026
C19	CAPACITOR, FIXED 0.001 UF, PORM 10 PCT, 100 V RMC PART NO. 0.001 JF PORM10PCT	11-S0005-008
C20	CAPACITOR, FIXED SAME AS C17	11-S0008-018
C21 THRU C23	CAPACITOR, VARIABLE 190 TO 760 PF	11-S0019-002
C24 THRU C26	CAPACITOR, FIXED 0.005 UF, PORM 10 PCT, 3 KV	11-S0027-001
C27	CAPACITOR, FIXED 20 UF, PORM 10 PCT, 30 V MALLORY PART NO. MTA 20D30	11-S0008-032
C28	CAPACITOR, FIXED 0.1 UF, +80, -20 PCT, 100 V RMC PART NO. 0.1 TA +80-20	11-S0005-006
C29 THRU C31	CAPACITOR, FIXED SAME AS C19	11-S0005-008
CR1	DIODE, 1N456	20-S0017-001
F1	FUSE, 3AG, SLO BLO, 5A	17-S0002-001
J1	CONNECTOR SWITCHCRAFT PART NO. 12A	16-S0005-001
J2	CONNECTOR SWITCHCRAFT PART NO. C12-B	16-S0004-001
J3,J4	CONNECTOR, PHONO SWITCHCRAFT PART NO. 3505F	16-S0002-001
J5	CONNECTOR, RECEPTACLE AMPHENOL PART NO. 57-40240	16-S0010-002

REF DESIG	NAME AND DESCRIPTION	SIGNAL/ONE PART NO.
J6	CONNECTOR, RECEPTACLE AMPHENOL PART NO. 57-40140	16-S0010-001
J7	CONNECTOR, TIP JACK EF JOHNSON PART NO. 105-802	16-S0003-001
J8 THRU J11	CONNECTOR, PHONO SAME AS J3	16-S0002-001
J12	CONNECTOR SWITCHCRAFT PART NO. 12B	16-S0006-001
J13	CONNECTOR SWITCHCRAFT PART NO. 11	16-S0007-001
J14	NOT USED	
J15	CONNECTOR, COAXIAL JAN TYPE SO-239	16-S0008-002
J16 THRU J18	CONNECTOR, PHONO SAME AS J3	16-S0002-001
K1	RELAY, TIME DELAY AMPERITE PART NO. 115N060T	47-S0002-001
L1	INDUCTOR, 10 UH PORM 10 PCT JEFFERS PART NO. 4445-2K	09-S0022-020
L2	COIL ASSEMBLY	09-S0019-003
L3	CHOKE, RF	09-S0029-001
L4	INDUCTOR, 22 UH PORM 1 PCT JEFFERS PART NO. 4424-1K	09-S0031-001
L5	INDUCTOR, 2.5 MH NATIONAL PART NO. R50	09-S0020-001
M1	METER, 0-1 MA MODUTEC PART NO. 18-DMA-001-81	33-S0001-001
P1	CONNECTOR, PLUG AMPHENOL PART NO. 57-30140	16-S0009-001
	LINE CORD AND PLUG BELDEN PART NO. 17419B	16-S0012-001
P2	CONNECTOR, PLUG AMPHENOL PART NO. 57-30240	16-S0009-002
P3	CONNECTOR, PLUG CINCH-JONES PART NO. 50-24A-30	16-S0015-001
	CONNECTOR, PLUG /BOARD INTERCONNECTIONS/ AMPHENOL PART NO. 60804-2	16-S0014-001
Q1	TRANSISTOR, NPN TEXAS INST. PART NO. T1P-29A	20-S0003-001

REF DESIG	NAME AND DESCRIPTION	SIGNAL/ONE PART NO.
Q2	TRANSISTOR, PNP TEXAS INST. PART NO. T1P-30	20-S0004-001
Q3,Q4	TRANSISTOR, NPN SAME AS Q1	20-S0003-001
R1	RESISTOR, VARIABLE 5K, PORM 20 PCT, 1/2 W	10-S0012-001
R2	RESISTOR, VARIABLE 10K, PORM 20 PCT, 1/2 W	10-S0008-001
R3	RESISTOR, VARIABLE 1K, PORM 20 PCT, 1/2 W	10-S0003-001
R4	RESISTOR, VARIABLE 25K, PORM 10 PCT, 1/2 W	10-S0007-001
R5	RESISTOR, VARIABLE 5K, PORM 20 PCT, 1/2 W	10-S0009-001
R6	RESISTOR, VARIABLE 10K, PORM 10 PCT, 1/2 W	10-S0002-001
R7	RESISTOR, VARIABLE /PART OF S5/	
R8	RESISTOR, VARIABLE /PART OF S6/	
R9	RESISTOR, VARIABLE, DUAL 500 OHMS, EACH, 1/2 W FRONT SECTION PORM 10 PCT, REAR SECTION PORM 20 PCT	10-S0010-001
R10	RESISTOR, VARIABLE 5K, PORM 20 PCT, 1/2 W	10-S0006-001
R11	RESISTOR, VARIABLE 250 OHM, PORM 20 PCT, 1/2 W	10-S0005-001
R12	RESISTOR, VARIABLE 500K, PORM 20 PCT, 1/2 W	10-S0004-001
R13	RESISTOR, VARIABLE 100 OHM, PORM 20 PCT, 1/2 W	10-S0011-001
R14	RESISTOR, VARIABLE, DUAL FRONT SECTION 2K, PORM 20 PCT, 1/2 W REAR SECTION 20K, PORM 10 PCT, 1/2 W	10-S0001-001
R15 THRU R18	RESISTOR, FIXED 120K, PORM 10 PCT, 2 W	10-S0020-006
R19	RESISTOR, FIXED 22K, PORM 10 PCT, 1/4 W	10-S0013-048
R20	NOT USED	
R21	RESISTOR, FIXED 330 OHM, PORM 10 PCT, 1/4 W	10-S0013-026
R22,R23	RESISTOR, FIXED 10K, PORM 10 PCT, 1/4 W	10-S0013-044
R24	RESISTOR, FIXED 3.3M, PORM 10 PCT, 1/4 W	10-S0013-074

REF DESIG	NAME AND DESCRIPTION	SIGNAL/ONE PART NO.
R25	RESISTOR /SURGISTOR/ WORKMAN PART NO. FRT2	10-S0028-001
S1A THRU S1E	SWITCH ASSEMBLY	07-S0003-001
S2A THRU S2E	SWITCH ASSEMBLY	07-S0002-001
S3A THRU S3F	SWITCH ASSEMBLY	07-S0001-001
S4	SWITCH/POTENTIOMETER ASSY /PART OF R4/	
S5	SWITCH/POTENTIOMETER ASSY	07-S0007-001
S6	SWITCH/POTENTIOMETER ASSY	07-S0008-001
S7	NOT USED	
S8	SWITCH ASSEMBLY	07-S0009-001
S9	SWITCH SWITCHCRAFT PART NO. A6203L	07-S0013-001
T1	TRANSFORMER, POWER	08-S0003-001
T2	TRANSFORMER, AUDIO DELTONA CORP PART NO. 327-W1	08-S0009-001
TB1	TERMINAL BOARD	61-S0010-001
V1	TUBE RCA PART NO. 8072	20-S0001-001
XF1	FUSE HOLDER LITTLEFUSE PART NO. 342014	17-S0001-001
XK1	SOCKET AMPHENOL PART NO. 59-446	19-S0002-001
	PTO MODULE A1	
C1	CAPACITOR, FIXED SELECTED DURING TEST	
C2	CAPACITOR, FIXED 82 PF, PORM 5 PCT, 500 V CDE PART NO. CM05 ED820 J03	11-S0001-024
C3	CAPACITOR, FIXED 390 PF, PORM 5 PCT, 500 V CDE PART NO. CM05 FD391 J03	11-S0001-040
C4,C5	CAPACITOR, FIXED 680 PF, PORM 5 PCT, 300 V CDE PART NO. CM05 FD681 J03	11-S0001-046

REF DESIG	NAME AND DESCRIPTION	SIGNAL/ONE PART NO.
C6	CAPACITOR, FIXED 0.01 UF, +80-20 PCT, 100 V ERIE PART NO. 805-000-X5V0-103Z	11-S0005-002
C7	CAPACITOR, FIXED 2 PF, PORM 0.25 PF, 500 V ERIE PART NO. 301-000 COKO 209C	11-S0002-005
C8 THRU C15	CAPACITOR, FIXED SAME AS C6	11-S0005-002
C16	CAPACITOR, VARIABLE 5.5 TO 18 PF ERIE PART NO. 538-011-92A	11-S0020-002
C17	CAPACITOR, FIXED 47 PF, PORM 5 PCT, 500 V CDE PART NO. CM05 ED470 J03	11-S0001-018
C18	CAPACITOR, FIXED 68 PF, PORM 5 PCT, 500 V CDE PART NO. CM05 ED680 J03	11-S0001-022
CR1	DIODE HEWLETT-PACKARD PART NO. HPA 5082-2800	20-S0010-001
CR2	DIODE, VARACTOR 1N3182	20-S0018-001
CR3	DIODE, ZENER 12 V, PORM 10 PCT, 1 W SCHAUER PART NO. SZ12.0	20-S0011-018
L1	COIL ASSEMBLY	09-S0015-001
L2	INDUCTOR, FIXED 1 MH PORM 10 PCT NYTRONICS PART NO. SWD-1000	09-S0024-001
L3	INDUCTOR, FIXED 33 UH PORM 5 PCT JEFFERS PART NO. 4465-2J	09-S0022-029
Q1	TRANSISTOR, FIELD EFFECT RCA PART NO. 40468A	20-S0006-001
Q2,Q3	TRANSISTOR, NPN RCA PART NO. 40235	20-S0009-001
R1	RESISTOR, FIXED 22K, PORM 10 PCT, 1/4 W	10-S0013-048
R2	RESISTOR, FIXED 100 OHM, PORM 10 PCT, 1/4 W	10-S0013-020
R3,R4	RESISTOR, FIXED 10K, PORM 10 PCT, 1/4 W	10-S0013-044
R5,R6	RESISTOR, FIXED 1K, PORM 10 PCT, 1/4 W	10-S0013-032
R7	RESISTOR, FIXED SAME AS R2	10-S0013-020
R8	RESISTOR, FIXED 2.2K, PORM 10 PCT, 1/4 W	10-S0013-036

REF DESIG	NAME AND DESCRIPTION	SIGNAL/ONE PART NO.
R9	RESISTOR, FIXED SAME AS R2	10-S0013-020
R10	RESISTOR, FIXED 1.5K, PORM 10 PCT, 1/4 W	10-S0013-034
R11	RESISTOR, FIXED 100K, PORM 10 PCT, 1/4 W	10-S0013-056
R12,R13	RESISTOR, FIXED 470 OHM, PORM 10 PCT, 1/4 W	10-S0013-028
	FRONT END BOARD A2	
C1	CAPACITOR, FIXED 82 PF, PORM 5 PCT, 500 V CORNELL DUBILIER PART NO. CM05-ED820J03	11-S0001-024
C2	CAPACITOR, FIXED 3000 PF, PORM 5 PCT, 500 V CORNELL DUBILIER PART NO. CM06-FD302J03	11-S0001-061
C3	CAPACITOR, FIXED 22 PF, PORM 5 PCT, 500 V CORNELL DUBILIER PART NO. CM05-ED220J03	11-S0001-010
C4	CAPACITOR, FIXED 1000 PF, PORM 5 PCT, 100 V CORNELL DUBILIER PART NO. CM05-FA102J03	11-S0001-050
C5	CAPACITOR, FIXED 5.0 PF, PORM 0.25 PF, 500 V ERIE PART NO. 301-000C0H0509C	11-S0002-010
C6	CAPACITOR, FIXED 220 PF, PORM 5 PCT, 500 V CORNELL DUBILIER PART NO. CM05-FD221J03	11-S0001-034
C7	CAPACITOR, FIXED 0.001 UF, PORM 10 PCT, 100 V RMC PART NO. 0.01 JF	11-S0005-008
C8	NOT USED	
C9	CAPACITOR, FIXED SAME AS C3	11-S0001-010
C10	CAPACITOR, FIXED 18 PF PORM 0.5 PF, 500 V CDE PART NO. CM05 CD180 D03	11-S0001-008
C11	CAPACITOR, FIXED 270 PF, PORM 5 PCT, 500 V CORNELL DUBILIER PART NO. CM05-FD271J03	11-S0001-036
C12	CAPACITOR, FIXED 150 PF, PORM 5 PCT, 500 V CORNELL DUBILIER PART NO. CM05-FD151J03	11-S0001-030
C13	CAPACITOR, FIXED 390 PF, PORM 5 PCT, 500 V CDE PART NO. CM05 FD391 J03	11-S0001-040

REF DESIG	NAME AND DESCRIPTION	SIGNAL/ONE PART NO.
C14	NOT USED	
C15 THRU C17	CAPACITOR, FIXED 0.01 UF, +80-20 PCT, 100 V ERIE PART NO. 805-000-X5V0-103Z	11-S0005-002
C18	CAPACITOR, FIXED 0.1 UF, +80-20 PCT, 100 V ERIE PART NO. 845-000-X5V0-104Z	11-S0005-006
C19	CAPACITOR, FIXED SAME AS C15	11-S0005-002
C20	CAPACITOR, FIXED 0.0005 UF, PORM 10 PCT, 100 V RMC PART NO. 0.0005 JF	11-S0005-007
C21	CAPACITOR, FIXED SAME AS C7	11-S0005-008
C22	CAPACITOR, FIXED SAME AS C20	11-S0005-007
C23	CAPACITOR, FIXED 12 PF, PORM 0.5 PF, 500 V CORNELL DUBILIER PART NO. CM05-CD120D03	11-S0001-006
C24	CAPACITOR, FIXED 120 PF, PORM 5 PCT, 500 V CORNELL DUBILIER PART NO. CM05-FD121J03	11-S0001-028
C25	CAPACITOR, FIXED 3.0 PF, PORM 0.25 PF, 500 V ERIE PART NO. 301-000C0J0309C	11-S0002-007
C26	CAPACITOR, FIXED SAME AS C23	11-S0001-006
C27	CAPACITOR, FIXED SAME AS C20	11-S0005-007
C28 THRU C30	CAPACITOR, FIXED SAME AS C7	11-S0005-008
C31	CAPACITOR, FIXED 1.0 PF, PORM 0.25 PF, 500 V ERIE PART NO. 301-000C0K0109C	11-S0002-003
C32	CAPACITOR, FIXED SAME AS C20	11-S0005-007
C33 THRU C35	CAPACITOR, FIXED SAME AS C7	11-S0005-008
C36	CAPACITOR, FIXED 10 PF, PORM 0.5 PF CORNELL DUBILIER PART NO. CM05-CD100D03	11-S0001-005
C37	CAPACITOR, FIXED SAME AS C15	11-S0005-002
C38	CAPACITOR, FIXED SAME AS C7	11-S0005-008

REF DESIG	NAME AND DESCRIPTION	SIGNAL/ONE PART NO.
C39	CAPACITOR, FIXED SAME AS C15	11-S0005-002
C40	CAPACITOR, FIXED SAME AS C25	11-S0002-007
C41	CAPACITOR, FIXED 0.5 PF, PORM 0.25 PF, 500 V ERIE PART NO. 301-000-C0K0508C	11-S0002-001
C42,C43	CAPACITOR, FIXED SAME AS C5	11-S0002-010
C44	NOT USED	
C45 THRU C47	CAPACITOR, FIXED SAME AS C15	11-S0005-002
C48	CAPACITOR, FIXED SAME AS C18	11-S0005-006
C49	CAPACITOR, FIXED SAME AS C7	11-S0005-008
C50	CAPACITOR, VARIABLE 5.5 TO 18 PF ERIE PART NO. 538-011-92A	11-S0020-002
C51	CAPACITOR, FIXED 68 PF, PORM 5 PCT, 500 V CORNELL DUBILIER PART NO. CM05-ED680J03	11-S0001-022
C52	CAPACITOR, VARIABLE SAME AS C50	11-S0020-002
C53	CAPACITOR, FIXED 47 PF, PORM 5 PCT, 500 V CORNELL DUBILIER PART NO. CM05-ED470J03	11-S0001-018
C54	CAPACITOR, VARIABLE SAME AS C50	11-S0020-002
C55	CAPACITOR, FIXED 39 PF, PORM 5 PCT, 500 V CORNELL DUBILIER PART NO. CM05-ED390J03	11-S0001-016
C56 THRU C59	CAPACITOR, VARIABLE SAME AS C50	11-S0020-002
C60	CAPACITOR, FIXED 27 PF, PORM 5 PCT, 500 V CORNELL DUBILIER PART NO. CM05-ED270J03	11-S0001-012
C61	CAPACITOR, VARIABLE SAME AS C50	11-S0020-002
C62 THRU C66	CAPACITOR, FIXED SAME AS C7	11-S0005-008
C67	CAPACITOR, FIXED 330 PF, PORM 5 PCT, 500 V CORNELL DUBILIER PART NO. CM05-FD331J03	11-S0001-038

REF DESIG	NAME AND DESCRIPTION	SIGNAL/ONE PART NO.
C68	CAPACITOR, VARIABLE SAME AS C50	11-S0020-002
C69	CAPACITOR, FIXED SAME AS C36	11-S0001-005
C70	CAPACITOR, FIXED 56 PF, PORM 5 PCT, 500 V CORNELL DUBILIER CM05-ED560J03	11-S0001-020
C71	CAPACITOR, FIXED 100 PF, PORM 5 PCT, 500 V CDE PART NO. CM05 CD100 J03	11-S0001-026
C72,C73	CAPACITOR, FIXED SAME AS C7	11-S0005-008
C74	CAPACITOR, FIXED SAME AS C12	11-S0001-030
C75	CAPACITOR, FIXED 15 PF, PORM 0.5 PF, 500 V CORNELL DUBILIER PART NO. CM05-CD150D03	11-S0001-007
C76	CAPACITOR, FIXED SAME AS C55	11-S0001-016
C77	CAPACITOR, VARIABLE SAME AS C50	11-S0020-002
C78	CAPACITOR, FIXED SAME AS C60	11-S0001-012
C79	CAPACITOR, FIXED SAME AS C12	11-S0001-030
C80	CAPACITOR, FIXED SAME AS C71	11-S0001-026
C81,C82	CAPACITOR, FIXED SAME AS C5	11-S0002-010
CR1	NOT USED	
CR2	NOT USED	
CR3	DIODE 1N456	20-S0017-001
IC1	INTEGRATED CIRCUIT RCA PART NO. CA3028A	72-S0006-001
L1	INDUCTOR, FIXED 3.3 UH, PORM 10 PCT JEFFERS PART NO. 4425-12K	09-S0022-014
L2	INDUCTOR, FIXED 4.7 UH, PORM 10 PCT JEFFERS PART NO. 4425-14K	09-S0022-016
L3	INDUCTOR, VARIABLE	09-S0004-001
L4	INDUCTOR, VARIABLE	09-S0004-002
L5	INDUCTOR, FIXED	09-S0026-002

REF DESIG	NAME AND DESCRIPTION	SIGNAL/ONE PART NO.
L6,L7	INDUCTOR, FIXED	09-S0026-001
P	CONNECTOR, PLUG AMPHENOL PART NO. 61181-2EC /BOARD INTERCONNECTIONS/	16-S0013-001
Q1	TRANSISTOR, DUAL GATE FIELD-EFFECT RCA PART NO. 40673	20-S0025-001
Q2	TRANSISTOR, DUAL GATE FIELD-EFFECT RCA PART NO. 40604	20-S0008-001
Q3,Q4	TRANSISTOR, DUAL GATE FIELD-EFFECT RCA PART NO. 40603	20-S0007-001
Q5	TRANSISTOR, NPN BIPOLAR 2N2222A	20-S0026-001
Q6	TRANSISTOR, FIELD-EFFECT RCA PART NO. 40468A	20-S0006-001
Q7	TRANSISTOR, NPN BIPOLAR RCA PART NO. 40235	20-S0009-001
Q8	TRANSISTOR, NPN 2N5187	20-S0022-001
R1	RESISTOR, FIXED 47K, PORM 10 PCT, 1/4 W	10-S0013-052
R2	RESISTOR, FIXED 470K, PORM 10 PCT, 1/4 W	10-S0013-064
R3,R4	RESISTOR, FIXED 220 OHM, PORM 10 PCT, 1/4 W	10-S0013-024
R5	RESISTOR, FIXED 820 OHM, PORM 10 PCT, 1/4 W	10-S0013-031
R6	RESISTOR, FIXED 15K, PORM 10 PCT, 1/4 W	10-S0013-046
R7	RESISTOR, FIXED SAME AS R1	10-S0013-052
R8	RESISTOR, FIXED /SELECTED DURING TEST/	
R9	RESISTOR, FIXED 4.7K, PORM 10 PCT, 1/4 W	10-S0013-040
R10 THRU R12	RESISTOR, FIXED SAME AS R3	10-S0013-024
R13	RESISTOR, FIXED SAME AS R2	10-S0013-064
R14	RESISTOR, FIXED 12K, PORM 10 PCT, 1/4 W	10-S0013-045
R15	RESISTOR, FIXED 10K, PORM 10 PCT, 1/4 W	10-S0013-044
R16,R17	RESISTOR, FIXED SAME AS R3	10-S0013-024

REF DESIG	NAME AND DESCRIPTION	SIGNAL/ONE PART NO.
R18	RESISTOR, FIXED SAME AS R6	10-S0013-046
R19	RESISTOR, FIXED 82K, PORM 5 PCT, 1/4 W	10-S0026-001
R20	RESISTOR, FIXED SAME AS R3	10-S0013-024
R21	RESISTOR, FIXED 6.8K, PORM 10 PCT, 1/4 W	10-S0013-042
R22	RESISTOR, FIXED SAME AS R15	10-S0013-044
R23	RESISTOR, FIXED SAME AS R21	10-S0013-042
R24	RESISTOR, FIXED 330 OHM, PORM 10 PCT, 1/4 W	10-S0013-026
R25	RESISTOR, FIXED SAME AS R21	10-S0013-042
R26	RESISTOR, FIXED 47 OHM, PORM 10 PCT, 1/4 W	10-S0013-016
R27	RESISTOR, FIXED SAME AS R24	10-S0013-026
R28,R29	RESISTOR, FIXED 1K, PORM 10 PCT, 1/4 W	10-S0013-032
R30	RESISTOR, FIXED SAME AS R9	10-S0013-040
R31	RESISTOR, FIXED 470 OHM, PORM 10 PCT, 1/4 W	10-S0013-028
R32	RESISTOR, FIXED SAME AS R28	10-S0013-032
R33	RESISTOR, FIXED SAME AS R15	10-S0013-044
R34	RESISTOR, FIXED SAME AS R31	10-S0013-028
R35	RESISTOR, FIXED SAME AS R28	10-S0013-032
R36,R37	RESISTOR, FIXED 100 OHM, PORM 10 PCT, 1/4 W	10-S0013-020
R38	RESISTOR, FIXED SAME AS R31	10-S0013-028
R39	RESISTOR, FIXED 1.2K, PORM 10 PCT, 1/4 W	10-S0013-033
R40	RESISTOR, FIXED SAME AS R3	10-S0013-024
R41	NOT USED	
R42	RESISTOR, FIXED SAME AS R15	10-S0013-044
R43,R44	NOT USED	

REF DESIG	NAME AND DESCRIPTION	SIGNAL/ONE PART NO.
R45	RESISTOR, FIXED SAME AS R21	10-S0013-042
R46	RESISTOR, FIXED SAME AS R28	10-S0013-032
R47,R48	RESISTOR, FIXED SAME AS R26	10-S0013-016
S1 THRU S6	NOT USED	
S7	SWITCH	07-S0012-001
T1	TRANSFORMER, FIXED	09-S0009-002
T2	TRANSFORMER, FIXED	09-S0010-001
T3	TRANSFORMER, FIXED	09-S0006-002
T4	TRANSFORMER, FIXED	09-S0006-003
T5	NOT USED	
T6 THRU T8	TRANSFORMER, VARIABLE	09-S0004-003
T9	TRANSFORMER, FIXED	09-S0011-001
T10	TRANSFORMER, FIXED	09-S0012-001
XY1	NOT USED	
XY2 THRU XY8	SOCKET, CRYSTAL CONNECTOR CORP. PART NO. CS110	19-S0003-001
Y1	NOT USED	
Y2	CRYSTAL, 69 MHZ	13-S0006-003
Y3	CRYSTAL, 68 MHZ	13-S0006-002
Y4	CRYSTAL, 61 MHZ	13-S0006-001
Y5	CRYSTAL, 54 MHZ	13-S0005-004
Y6	CRYSTAL, 47 MHZ	13-S0005-003
Y7	CRYSTAL, 43 MHZ	13-S0005-002
Y8	CRYSTAL, 41 MHZ	13-S0005-001

REF DESIG	NAME AND DESCRIPTION	SIGNAL/ONE PART NO.
	POWER SUPPLY BOARD A3	
C1	CAPACITOR, FIXED 70 UF, +80-20 PCT, 50 V MALLORY PART NO. MTV-70-N-50-PDJ	11-S0007-058
C2	CAPACITOR, FIXED 100 UF, +80-20 PCT, 150 V SPRAGUE PART NO. TVA-1420	11-S0010-001
C3,C4	CAPACITOR, FIXED 150 UF, +80-20 PCT, 35 V MALLORY PART NO. MTV-150-N-35-PDJ	11-S0007-043
C5	CAPACITOR, FIXED 0.1 UF, +80-20 PCT, 100 V RMC PART NO. 0.1TA+80-20	11-S0005-006
C6,C7	CAPACITOR, FIXED SAME AS C3	11-S0007-043
C8	CAPACITOR, FIXED SAME AS C5	11-S0005-006
C9	CAPACITOR, FIXED SAME AS C3	11-S0007-043
C10	CAPACITOR, FIXED 0.47 UF, +80-20 PCT, 25 V ERIE PART NO. 5865-000-Y5U0-474Z	11-S0006-007
C11	CAPACITOR, FIXED SAME AS C3	11-S0007-043
C12	CAPACITOR, FIXED SAME AS C1	11-S0007-058
C13	CAPACITOR, FIXED SAME AS C5	11-S0005-006
C14	CAPACITOR, FIXED 1 UF, +80-20 PCT, 50 V MALLORY PART NO. MTV-1-N-50-PCB	11-S0007-045
C15	CAPACITOR, FIXED 5 UF, +80-20 PCT, 50 V MALLORY PART NO. MTV-5-N-50-PCB	11-S0007-049
C16	CAPACITOR, FIXED 0.001 UF, PORM 10 PCT, 100 V RMC PART NO. .001J5 PORM 10 PCT	11-S0005-008
C17	CAPACITOR, FIXED SAME AS C3	11-S0007-043
C18	CAPACITOR, FIXED SAME AS C5	11-S0005-006
C19	CAPACITOR, FIXED SAME AS C1	11-S0007-058
C20	CAPACITOR, FIXED 0.022 UF, PORM 10 PCT, 100 V MALLORY PART NO. PV1 1122	11-S0022-002
C21 THRU C23	CAPACITOR, FIXED 0.01 UF, +80-20 PCT, 100 V RMC PART NO. .01TA+80,-20PCT	11-S0005-002

REF DESIG	NAME AND DESCRIPTION	SIGNAL/ONE PART NO.
C24	CAPACITOR, FIXED 180 PF, PORM 5 PCT, 500 VDC CDE PART NO. CM05 FD181 J03	11-S0001-032
CR1 THRU CR4	DIODE SARKES-TARZIAN PART NO. HVC-240	20-S0012-001
CR5 THRU CR8	DIODE ATLANTIC PART NO. 75A4	20-S0013-001
CR9,CR10	DIODE ATLANTIC PART NO. 75A1	20-S0014-001
CR11	DIODE, ZENER 10 V, PORM 10 PCT, 1 W SCHAUER PART NO. SZ10.0	20-S0011-016
CR12 THRU CR17	DIODE ATLANTIC PART NO. 1A1	20-S0015-001
CR18, CR19	DIODE 1N270	20-S0016-001
CR20	DIODE, ZENER 3.9 V, PORM 10 PCT, 1 W SCHAUER PART NO. SZ3.9	20-S0011-006
IC1	INTEGRATED CIRCUIT GENERAL ELECTRIC PART NO. PA237	72-S0007-001
P	CONNECTOR, PLUG AMPHENOL PART NO. 61181-2EC /BOARD INTERCONNECTIONS/	16-S0013-001
Q1,Q2	TRANSISTOR, PNP MOTOROLA PART NO. MPS-3702	20-S0005-001
Q3 THRU Q6	TRANSISTOR, NPN RCA PART NO. 2N5184	20-S0021-001
Q7,Q8	TRANSISTOR, NPN RCA PART NO. 2N5183	20-S0020-001
Q9,Q10	TRANSISTOR, NPN SAME AS Q3	20-S0021-001
Q11	TRANSISTOR, NPN TEXAS INSTR. PART NO. T1P-29A	20-S0003-001
Q12	TRANSISTOR, NPN SAME AS Q3	20-S0021-001
R1	RESISTOR, FIXED 2.7 OHM, PORM 5 PCT, 1 W	10-S0023-001
R2	RESISTOR, FIXED 649 OHM, PORM 1 PCT, 1/4 W	10-S0015-003
R3	RESISTOR, FIXED 4.870K, PORM 1 PCT, 1/4 W	10-S0015-010

REF DESIG	NAME AND DESCRIPTION	SIGNAL/ONE PART NO.
R4	RESISTOR, FIXED 47K, PORM 5 PCT, 1/4 W	10-S0014-052
R5	RESISTOR, FIXED 6.8K, PORM 10 PCT, 1/4 W	10-S0013-042
R6	RESISTOR, FIXED 100 OHM, PORM 5 PCT, 1/2 W	10-S0017-001
R7,R8	RESISTOR, FIXED 300 OHM, PORM 10 PCT, 5 W	10-S0021-002
R9	RESISTOR, FIXED 100K, PORM 10 PCT, 1/4 W	10-S0013-056
R10	RESISTOR, FIXED 330 OHM, PORM 10 PCT, 1/4 W	10-S0013-026
R11,R12	RESISTOR, FIXED 220 OHM, PORM 10 PCT, 1/4 W	10-S0013-024
R13	RESISTOR, FIXED 7.5 OHM, PORM 10 PCT, 5 W	10-S0021-001
R14	RESISTOR, FIXED 120K, PORM 10 PCT, 2 W	10-S0020-006
R15	RESISTOR, FIXED 1K, PORM 10 PCT, 1/4 W	10-S0013-032
R16	RESISTOR, VARIABLE 500 OHM, PORM 20 PCT, 1/4 W	10-S0024-005
R17	RESISTOR, FIXED SAME AS R11	10-S0013-024
R18	RESISTOR, FIXED 2K, PORM 1 PCT, 1/4 W	10-S0015-006
R19	RESISTOR, FIXED 820 OHM, PORM 10 PCT, 1/4 W	10-S0013-031
R20,R21	RESISTOR, FIXED SAME AS R11	10-S0013-024
R22	RESISTOR, FIXED SAME AS R13	10-S0021-001
R23	RESISTOR, FIXED 1.050K, PORM 1 PCT, 1/4 W	10-S0015-004
R24	RESISTOR, FIXED 1.820K, PORM 1 PCT, 1/4 W	10-S0015-005
R25	RESISTOR, FIXED 820 OHM, PORM 10 PCT, 1/2 W	10-S0016-007
R26	RESISTOR, FIXED 7.150K, PORM 1 PCT, 1/4 W	10-S0015-011
R27	RESISTOR, FIXED 3.320K, PORM 1 PCT, 1/4 W	10-S0015-009
R28	RESISTOR, FIXED 2.7K, PORM 10 PCT, 1/4 W	10-S0013-037
R29	RESISTOR, FIXED 100 OHM, PORM 5 PCT, 1/2 W	10-S0017-001
R30	RESISTOR, FIXED 2.490K, PORM 1 PCT, 1/4 W	10-S0015-008

REF DESIG	NAME AND DESCRIPTION	SIGNAL/ONE PART NO.
R31	RESISTOR, FIXED 1.910K, PORM 1 PCT, 1/4 W	10-S0015-016
R32	RESISTOR, FIXED 576 OHM, PORM 1 PCT, 1/4 W	10-S0015-002
R33	RESISTOR, FIXED 56K, PORM 10 PCT, 1/4 W	10-S0013-053
R34	RESISTOR, FIXED 680K, PORM 10 PCT, 1/4 W	10-S0013-066
R35	RESISTOR, FIXED SAME AS R33	10-S0013-053
R36	RESISTOR, FIXED SAME AS R5	10-S0013-042
R37	RESISTOR, FIXED 330K, PORM 10 PCT, 1/4 W	10-S0013-062
R38	RESISTOR, FIXED 18K, PORM 10 PCT, 1/4 W	10-S0013-047
R39	RESISTOR, FIXED SAME AS R19	10-S0013-031
R40	RESISTOR, FIXED SAME AS R1	10-S0023-001
R41	RESISTOR, FIXED 1 OHM, PORM 5 PCT, 1 1/2 W	10-S0019-001
R42	RESISTOR, FIXED 82K, PORM 10 PCT, 1/4 W	10-S0013-055
	BFO BOARD A4	
C1 THRU C11	CAPACITOR, FIXED 0.01 UF, +80-20 PCT, 100 V RMC PART NO. .01TA +80,-20PCT	11-S0005-002
C12	CAPACITOR, FIXED 47 PF, PORM 5 PCT, 500 V CDE PART NO. CM05 ED470 J03	11-S0001-018
C13,C14	CAPACITOR, FIXED 5.0 PF, PORM 0.25 PF, 500 V ERIE PART NO. 301-000C0H0-509C	11-S0002-010
C15 THRU C23	CAPACITOR, FIXED SAME AS C1	11-S0005-002
C24,C25	CAPACITOR, FIXED 33 PF, PORM 5 PCT, 500 V CORNELL DUBILIER PART NO. CM05-ED330J03	11-S0001-014
C26	CAPACITOR, FIXED 1000 PF, PORM 5 PCT, 100 V CORNELL DUBILIER PART NO. CM05-FA102J03	11-S0001-050
C27	CAPACITOR, FIXED 10 PF, PORM 0.5 PF, 500 V CORNELL DUBILIER PART NO. CM05-CD100D03	11-S0001-005

REF DESIG	NAME AND DESCRIPTION	SIGNAL/ONE PART NO.
C28,C29	CAPACITOR, FIXED SAME AS C26	11-S0001-050
C30	CAPACITOR, FIXED 100 PF, PORM 5 PCT, 500 V CORNELL DUBILIER PART NO. CM05-FD101J03	11-S0001-026
C31	CAPACITOR, VARIABLE 2.4 TO 24.5 PF EF JOHNSON PART NO. 189-509-5	11-S0028-001
C32 THRU C35	CAPACITOR, FIXED SAME AS C1	11-S0005-002
C36,C37	CAPACITOR, FIXED 82 PF, PORM 5 PCT, 500 V CORNELL DUBILIER PART NO. CM05-ED820J03	11-S0001-024
C38	CAPACITOR, FIXED 2.0 PF, PORM 0.25 PF, 500 V ERIE PART NO. 301-000C0K0-209C	11-S0002-005
C39 THRU C47	CAPACITOR, FIXED SAME AS C1	11-S0005-002
C48	CAPACITOR, FIXED SAME AS C26	11-S0001-050
C49	CAPACITOR, FIXED 12 PF, PORM 0.5 PF, 500 V CORNELL DUBILIER PART NO. CM05-CD120D03	11-S0001-006
C50,C51	CAPACITOR, FIXED SAME AS C1	11-S0005-002
C52	CAPACITOR, FIXED /SELECTED DURING TEST/	
CR1,CR2	DIODE, VARACTOR AMPEREX PART NO. 1N3182	20-S0018-001
CR3	DIODE, VARACTOR EASTRON PART NO. VC 825	20-S0028-001
CR4,CR5	DIODE 1N270	20-S0016-001
CR6,CR7	DIODE 1N456	20-S0017-001
CR8	DIODE 8.6 V, PORM 5 PCT, 1 W SCHAUER PART NO. SZ8.6A	20-S0011-022
CR9,CR10	DIODE SAME AS CR6	20-S0017-001
CR11	DIODE SAME AS CR8	20-S0011-022
IC1 THRU IC3	INTEGRATED CIRCUIT RCA PART NO. CA 3028A	72-S0006-001
L1	INDUCTOR, FIXED 10 UH, PORM 10 PCT JEFFERS PART NO. 4445-2K	09-S0022-020

REF DESIG	NAME AND DESCRIPTION	SIGNAL/ONE PART NO.
L2	INDUCTOR, FIXED 1.2 UH, PORM 10 PCT JEFFERS PART NO. 4425-7K	09-S0022-009
L3	INDUCTOR, FIXED 22 UH, PORM 5 PCT JEFFERS PART NO. 4445-7J	09-S0022-025
L4	INDUCTOR, VARIABLE 34.2 MHZ	09-S0004-004
L5	INDUCTOR, FIXED 33 UH, PORM 5 PCT JEFFERS PART NO. 4465-2J	09-S0022-029
P	CONNECTOR, PLUG AMPHENOL PART NO. 61181-2EC /BOARD INTERCONNECTIONS/	16-S0013-001
Q1	TRANSISTOR, NPN RCA PART NO. 2N5184	20-S0021-001
Q2	TRANSISTOR, NPN RCA PART NO. 2N5183	20-S0020-001
Q3	TRANSISTOR, FIELD EFFECT RCA PART NO. 40468A	20-S0006-001
Q4	TRANSISTOR, NPN SAME AS Q2	20-S0020-001
Q5	TRANSISTOR, NPN BIPOLAR RCA PART NO. 40235	20-S0009-001
R1	RESISTOR, FIXED 750 OHM, PORM 5 PCT, 2 W	10-S0026-001
R2,R3	RESISTOR, FIXED 10K, PORM 10 PCT, 1/4 W	10-S0013-044
R4	RESISTOR, FIXED 330 OHM, PORM 5 PCT, 1/4 W	10-S0014-026
R5	RESISTOR, FIXED 1.5K, PORM 5 PCT, 1/4 W	10-S0014-034
R6	RESISTOR, FIXED 47K, PORM 10 PCT, 1/4 W	10-S0013-052
R7	RESISTOR, FIXED 3.3K, PORM 5 PCT, 1/4 W	10-S0014-038
R8	RESISTOR, FIXED 120 OHM, PORM 5 PCT, 1/4 W	10-S0014-021
R9	RESISTOR, FIXED SAME AS R4	10-S0014-026
R10	RESISTOR, FIXED 680 OHM, PORM 5 PCT, 1/4 W	10-S0014-030
R11	RESISTOR, FIXED 100 OHM, PORM 5 PCT, 1/4 W	10-S0014-020
R12	RESISTOR, FIXED 6.8K, PORM 10 PCT, 1/4 W	10-S0013-042
R13	RESISTOR, FIXED SAME AS R10	10-S0014-030

REF DESIG	NAME AND DESCRIPTION	SIGNAL/ONE PART NO.
R14	RESISTOR, FIXED SAME AS R6	10-S0013-052
R15	RESISTOR, FIXED 22K, PORM 10 PCT, 1/4 W	10-S0013-048
R16	RESISTOR, FIXED SAME AS R2	10-S0013-044
R17,R18	RESISTOR, FIXED 220 OHM, PORM 5 PCT, 1/4 W	10-S0014-024
R19	RESISTOR, FIXED 1K, PORM 5 PCT, 1/4 W	10-S0014-032
R20,R21	RESISTOR, FIXED SAME AS R2	10-S0013-044
R22	RESISTOR, FIXED SAME AS R10	10-S0014-030
R23,R24	RESISTOR, FIXED SAME AS R11	10-S0014-020
R25	RESISTOR, FIXED SAME AS R12	10-S0013-042
R26	RESISTOR, FIXED SAME AS R7	10-S0014-038
R27	RESISTOR, FIXED SAME AS R2	10-S0013-044
R28	RESISTOR, FIXED 1.2K, PORM 5 PCT, 1/4 W	10-S0014-033
R29	RESISTOR, FIXED 470 OHM, PORM 10 PCT, 1/4 W	10-S0013-028
R30	RESISTOR, FIXED SAME AS R19	10-S0014-032
R31	RESISTOR, FIXED SAME AS R6	10-S0013-052
R32	RESISTOR, FIXED SAME AS R29	10-S0013-028
R33	RESISTOR, FIXED SAME AS R6	10-S0013-052
R34	RESISTOR, FIXED SAME AS R29	10-S0013-028
R35	RESISTOR, FIXED SAME AS R7	10-S0014-038
R36	RESISTOR, FIXED SAME AS R12	10-S0013-042
R37	RESISTOR, FIXED SAME AS R6	10-S0013-052
R38,R39	RESISTOR, FIXED SAME AS R11	10-S0014-020
R40	RESISTOR, FIXED SAME AS R17	10-S0014-024
R41	RESISTOR, FIXED SAME AS R19	10-S0014-032

REF DESIG	NAME AND DESCRIPTION	SIGNAL/ONE PART NO.
R42	RESISTOR, FIXED SAME AS R6	10-S0013-052
R43	RESISTOR, VARIABLE 5.0K, PORM 20 PCT, 1/4 W	10-S0027-011
R44	RESISTOR, FIXED 5.6K, PORM 5 PCT, 1/4 W	10-S0014-041
R45	RESISTOR, FIXED /SELECTED DURING TEST/	
R46	RESISTOR, VARIABLE 1K, PORM 20 PCT, 1/4 W	10-S0024-007
R47	RESISTOR, FIXED SAME AS R29	10-S0013-028
R48,R49	RESISTOR, FIXED 2.7K, PORM 10 PCT, 1/4 W	10-S0013-037
R50	RESISTOR, FIXED 33K, PORM 10 PCT, 1/4 W	10-S0013-050
R51,R52	RESISTOR, FIXED SAME AS R5	10-S0014-034
T1	TRANSFORMER, VARIABLE 34.2 MHZ	09-S0004-005
T2	TRANSFORMER, VARIABLE 34.2 MHZ	09-S0004-006
T3	TRANSFORMER, VARIABLE 34.2 MHZ	09-S0004-007
Y1	CRYSTAL, 8.813500 MHZ	13-S0002-002
Y2	CRYSTAL, 8.816500 MHZ	13-S0002-001
Y3	CRYSTAL, 43.100 MHZ	13-S0003-001
Y4	CRYSTAL, 11.42783 MHZ	13-S0004-001
	RF DRIVER BOARD A5	
C1	CAPACITOR, FIXED 0.1 UF, +80,-20 PCT, 100 V RMC PART NO. .1TA,+80,-20PCT	11-S0005-006
C2,C3	CAPACITOR, FIXED 0.01 UF, +80,-20 PCT, 100 V RMC PART NO. .01TA,+80,-20PCT	11-S0005-002
C4	CAPACITOR, FIXED 0.001 UF, PORM 10 PCT, 100 V RMC PART NO. .001JFPORM10PCT	11-S0005-008
C5 THRU C7	CAPACITOR, FIXED SAME AS C2	11-S0005-002
C8	CAPACITOR, FIXED 3.0 PF, PORM 0.25 PF, 500 V ERIE PART NO. 301-000-C0J0-309C	11-S0002-007

REF DESIG	NAME AND DESCRIPTION	SIGNAL/ONE PART NO.
C9	CAPACITOR, FIXED 0.5 PF, PORM 0.25 PF, 500 V ERIE PART NO. 301-000-C0K0-508C	11-S0002-001
C10,C11	CAPACITOR, FIXED 5.0 PF, PORM 0.25 PF, 500 V ERIE PART NO. 301-000-C0H0-509C	11-S0002-010
C12	NOT USED	
C13,C14	CAPACITOR, FIXED SAME AS C1	11-S0005-006
C15 THRU C17	CAPACITOR, FIXED SAME AS C2	11-S0005-002
C18	CAPACITOR, FIXED 390 PF, PORM 5 PCT, 500 V CDE PART NO. CM05 FD391 J03	11-S0001-040
C19 THRU C21	CAPACITOR, FIXED SAME AS C2	11-S0005-002
C22	CAPACITOR, FIXED 5.0 UF, +80-20 PCT, 50 V MALLORY PART NO. MTV-5-N-50-P-CB	11-S0007-049
C23,C24	CAPACITOR, FIXED SAME AS C2	11-S0005-002
C25	CAPACITOR, FIXED SAME AS C1	11-S0005-006
C26,C27	CAPACITOR, FIXED SAME AS C2	11-S0005-002
C28	CAPACITOR, FIXED 33.0 PF, PORM 5 PCT, 500 V CDE PART NO. CM05 ED330 J03	11-S0001-014
C29	CAPACITOR, FIXED 50 UF, +80-20 PCT, 50 V MALLORY PART NO. MTV-50-N-50-P-DE	11-S0007-057
C30	CAPACITOR, FIXED 0.01 UF, +80-20 PCT, 1000 V ERIE PART NO. 811-000-Z5U0-103M	11-S0003-021
C31	CAPACITOR, FIXED SAME AS C2	11-S0005-002
C32,C33	NOT USED	
C34,C35	CAPACITOR, FIXED SAME AS C2	11-S0005-002
C36	CAPACITOR, FIXED 10 UF, +80-20 PCT, 50 V MALLORY PART NO. MTV-10-N-50-P-CB	11-S0007-052
C37	CAPACITOR, FIXED SAME AS C30	11-S0003-021

REF DESIG	NAME AND DESCRIPTION	SIGNAL/ONE PART NO.
C38	CAPACITOR, FIXED 680 PF, PORM 5 PCT, 300 V CDE PART NO. CM05 FC681 J03	11-S0001-046
C39,C40	NOT USED	
C41	CAPACITOR, FIXED SAME AS C2	11-S0005-002
C42	CAPACITOR, FIXED 0.22 UF, PORM 10 PCT, 100 V MALLORY PART NO. PVC 1022	11-S0022-010
C43	CAPACITOR, FIXED SAME AS C1	11-S0005-006
C44	CAPACITOR, FIXED 4.7 UF, PORM 10 PCT, 35 VDC SPRAGUE PART NO. 164D-475X903582	11-S0011-004
C45	CAPACITOR, FIXED SAME AS C2	11-S0005-002
CR1	DIODE, ZENER 12 V, PORM 10 PCT, 1 W SCHAUER PART NO. SZ12.0	20-S0011-018
CR2	DIODE, ZENER 3.9 V, PORM 10 PCT, 1 W SCHAUER PART NO. SZ3.9	20-S0011-006
CR3 THRU CR7	DIODE 1N270	20-S0016-001
CR8,CR9	DIODE 1N456	20-S0017-001
IC1	INTEGRATED CIRCUIT RCA PART NO. CA 3028A	72-S0006-001
L1,L2	INDUCTOR, VARIABLE	09-S0004-001
L3	INDUCTOR, FIXED	09-S0005-001
L4	INDUCTOR, FIXED	09-S0006-001
L5	INDUCTOR, FIXED 33 UH, PORM 5 PCT JEFFERS PART NO. 4465-2J	09-S0022-029
L6	INDUCTOR, FIXED 22 UH, PORM 5 PCT JEFFERS PART NO. 4445-7J	09-S0022-025
P	CONNECTOR, PLUG AMPHENOL PART NO. 61181-2EC /BOARD INTERCONNECTIONS/	16-S0013-001
Q1	TRANSISTOR, FIELD EFFECT RCA PART NO. 40468A	20-S0006-001
Q2	TRANSISTOR, NPN 2N3866	20-S0019-001

REF DESIG	NAME AND DESCRIPTION	SIGNAL/ONE PART NO.
Q3,Q4	TRANSISTOR, NPN SOLITRON PART NO. SRF-53104	20-S0023-001
Q5	TRANSISTOR, NPN 2N5184	20-S0021-001
Q6	TRANSISTOR, PNP MOTOROLA PART NO. MPS-3702	20-S0005-001
Q7	TRANSISTOR, NPN 2N5183	20-S0020-001
R1,R2	RESISTOR, FIXED 6.8K, PORM 10 PCT, 1/4 W	10-S0013-042
R3	RESISTOR, FIXED 1K, PORM 10 PCT, 1/4 W	10-S0013-032
R4	RESISTOR, FIXED 47 OHM, PORM 10 PCT, 1/4 W	10-S0013-016
R5	RESISTOR, FIXED SAME AS R3	10-S0013-032
R6,R7	RESISTOR, FIXED SAME AS R1	10-S0013-042
R8	RESISTOR, FIXED 2.2K, PORM 10 PCT, 1/4 W	10-S0013-036 040
R9	RESISTOR, FIXED 220 OHM, PORM 10 PCT, 1/4 W	10-S0013-024
R10	RESISTOR, FIXED 100 OHM, PORM 10 PCT, 1/4 W	10-S0013-020
R11	RESISTOR, FIXED SAME AS R4	10-S0013-016
R12	RESISTOR, FIXED 39 OHM, PORM 10 PCT, 1/4 W	10-S0013-015
R13	RESISTOR, FIXED 1.2K, PORM 10 PCT, 1/4 W	10-S0013-033
R14	RESISTOR, FIXED 470 OHM, PORM 10 PCT, 1/2 W	10-S0016-005
R15,R16	RESISTOR, FIXED 3.9 OHM, PORM 10 PCT, 1/4 W	10-S0013-003
R17	RESISTOR, FIXED 15 OHM, PORM 10 PCT, 1/4 W	10-S0013-010
R18	RESISTOR, FIXED 1.5K, PORM 10 PCT, 2 W	10-S0020-004
R19	RESISTOR, VARIABLE 5K, PORM 20 PCT, 1/4 W	10-S0024-011
R20	RESISTOR, FIXED 560 OHM, PORM 5 PCT, 1/2 W	10-S0017-003
R21	RESISTOR, FIXED SAME AS R17	10-S0013-010
R22	RESISTOR, FIXED 10 OHM, PORM 10 PCT, 1/4 W	10-S0013-008
R23	RESISTOR, FIXED 4.7 OHM, PORM 10 PCT, 1/2 W	10-S0016-001
R24	NOT USED	

REF DESIG	NAME AND DESCRIPTION	SIGNAL/ONE PART NO.
R25	RESISTOR, FIXED 1K, PORM 10 PCT, 2 W	10-S0020-003
R26	RESISTOR, FIXED 120 OHM, PORM 10 PCT, 1/2 W	10-S0016-004
R27	RESISTOR, FIXED 220 OHM, PORM 10 PCT, 2 W	10-S0020-008
R28,R29	RESISTOR, FIXED 22 OHM, PORM 10 PCT, 2 W	10-S0020-001
R30	RESISTOR, FIXED 1.5K, PORM 10 PCT, 1/4 W	10-S0013-034
R31	RESISTOR, VARIABLE 50K, PORM 20 PCT, 1/4 W	10-S0024-018
R32	RESISTOR, FIXED 3.3K, PORM 10 PCT, 1/4 W	10-S0013-038
R33	RESISTOR, FIXED 4.7K, PORM 10 PCT, 1/4 W	10-S0013-040
R34	RESISTOR, VARIABLE SAME AS R19	10-S0024-011
R35	NOT USED	
R36	RESISTOR, FIXED 33K, PORM 10 PCT, 1/4 W	10-S0013-050
R37 THRU R40	NOT USED	
R41	RESISTOR, FIXED SAME AS R36	10-S0013-050
R42	RESISTOR, FIXED 10K, PORM 10 PCT, 1/4 W	10-S0013-044
R43	RESISTOR, FIXED SAME AS R36	10-S0013-050
R44	RESISTOR, FIXED SAME AS R3	10-S0013-032
R45	RESISTOR, FIXED 2.7K, PORM 10 PCT, 1/4 W	10-S0013-037
R46	RESISTOR, FIXED SAME AS R8	10-S0013-036
R47	RESISTOR, FIXED 47K, PORM 10 PCT, 1/4 W	10-S0013-052
R48	RESISTOR, FIXED SAME AS R33	10-S0013-040
R49	RESISTOR, FIXED SAME AS R3	10-S0013-032
T1,T2	TRANSFORMER, FIXED	09-S0007-001
T3	TRANSFORMER, FIXED	09-S0008-001

REF DESIG	NAME AND DESCRIPTION	SIGNAL/ONE PART NO.
	AUDIO BOARD A6	
C1	CAPACITOR, FIXED 0.1 UF, +80,-20 PCT, 100 V RMC PART NO. .1TA,+80-20PCT	11-S0005-006
C2	CAPACITOR, FIXED 0.01 UF, +80,-20 PCT, 100 V RMC PART NO. .01TA,+80,-20PCT	11-S0005-002
C3	CAPACITOR, FIXED SAME AS C1	11-S0005-006
C4	CAPACITOR, FIXED SAME AS ~~C2~~ C1 See F ?	11-S0005-00?
C5	CAPACITOR, FIXED SAME AS C1	11-S0005-006
C6	CAPACITOR, FIXED 10 UF, +80-20 PCT, 50 V MALLORY PART NO. MTV-10-N-50-P-CB	11-S0007-052
C7	CAPACITOR, FIXED 100 UF, +80-20 PCT, 35 V MALLORY PART NO. MTV-100-N-35-P-DE	11-S0007-042
C8	CAPACITOR, FIXED 1 UF, +80-20 PCT, 50 V MALLORY PART NO. MTV-1-N-50-P-CB	11-S0007-045
C9	CAPACITOR, FIXED SAME AS C2	11-S0005-002
C10,C11	C10 Capacitor Fixed Released (Sec 2.1) CAPACITOR, FIXED SAME AS C1	11-S0005-006
C12	CAPACITOR, FIXED SAME AS C7	11-S0007-042
C13	CAPACITOR, FIXED SAME AS C6	11-S0007-052
C14 THRU C16	CAPACITOR, FIXED 0.047 UF, PORM 10 PCT, 100 V MALLORY PART NO. PVC 1147	11-S0022-005
C17	CAPACITOR, FIXED 0.47 UF, PORM 10 PCT, 100 V MALLORY PART NO. PVC 1047	11-S0022-013
C18	CAPACITOR, FIXED SAME AS C8	11-S0007-045
C19	CAPACITOR, FIXED SAME AS C12	11-S0007-042
C20	CAPACITOR, FIXED SAME AS C8	11-S0007-045
C21	CAPACITOR, FIXED 50 UF, +80-20 PCT, 50 V MALLORY PART NO. MTV-50-N-50-P-DE	11-S0007-057
C22,C23	CAPACITOR, FIXED 5 UF, +80-20 PCT, 50 V MALLORY PART NO. MTV-5-N-50-P-CB	11-S0007-049

REF DESIG	NAME AND DESCRIPTION	SIGNAL/ONE PART NO.
C24	CAPACITOR, FIXED SAME AS C8	11-S0007-045
C25,C26	CAPACITOR, FIXED SAME AS C22	11-S0007-049
C27	CAPACITOR, FIXED 0.47 UF, +80-20 PCT, 25 V ERIE PART NO. 5865-000-Y5U0-474Z	11-S0006-007
C28	CAPACITOR, FIXED 4.7 UF, +80-20 PCT, 35 VDC SPRAGUE PART NO. 164D-475X9035B2	11-S0011-004
C29	CAPACITOR, FIXED 270 PF, PORM 5 PCT, 500 V CDE PART NO. CM05 FD271 J03	11-S0001-036
C30 THRU C32	CAPACITOR, FIXED SAME AS C1	11-S0005-006
C33	CAPACITOR, FIXED SAME AS C7	11-S0007-042
C34	CAPACITOR, FIXED SAME AS C21	11-S0007-057
C35	CAPACITOR, FIXED 100 UF, +80-20 PCT, 6 VDC MALLORY PART NO. MTV-100-N-6-P-CB	11-S0007-006
C36	CAPACITOR, FIXED SAME AS C1	11-S0005-006
C37	CAPACITOR, FIXED SAME AS C22	11-S0007-049
C38,C39	CAPACITOR, FIXED SAME AS C7	11-S0007-042
C40	CAPACITOR, FIXED 100 PF, PORM 5 PCT, 500 V CDE PART NO. CM05 FD101 J03	11-S0001-026
C41,C42	CAPACITOR, FIXED 56 UF, PORM 20 PCT, 6 V SPRAGUE PART NO. 150D 566X9006B2	11-S0011-005
C43	CAPACITOR, FIXED 56 PF, PORM 5 PCT, 500 V CDE PART NO. CM05 ED560 J03	11-S0001-020
CR1,CR2	DIODE 1N270	20-S0016-001
L1,L2	INDUCTOR, FIXED 100 UH, PORM 5 PCT JEFFERS PART NO. 1315-12J	09-S0022-041
P	CONNECTOR, PLUG AMPHENOL PART NO. 61181-2EC /BOARD INTERCONNECTIONS/	16-S0013-001
Q1	TRANSISTOR, FIELD EFFECT RCA PART NO. 40468A	20-S0006-001

REF DESIG	NAME AND DESCRIPTION	SIGNAL/ONE PART NO.
Q2,Q3	TRANSISTOR, NPN RCA PART NO. 2N5183	20-S0020-001
Q4	TRANSISTOR, FIELD EFFECT SAME AS Q1	20-S0006-001
~~Q5~~,Q6	TRANSISTOR, NPN SAME AS Q2	20-S0020-001
Q7	TRANSISTOR, NPN RCA PART NO. 2N5184	20-S0021-001
Q8	TRANSISTOR, PNP MOTOROLA PART NO. MPS-3702	20-S0005-001
Q9	TRANSISTOR, FIELD EFFECT SAME AS Q1	20-S0006-001
Q10,Q11	TRANSISTOR, NPN SAME AS Q2	20-S0020-001
Q12 THRU Q15	TRANSISTOR, PNP SAME AS Q8	20-S0005-001
Q16,Q17	TRANSISTOR, NPN SAME AS Q2	20-S0020-001
Q18,Q19	TRANSISTOR, FIELD EFFECT SAME AS Q1	20-S0006-001
R1	RESISTOR, FIXED 47K, PORM 10 PCT, 1/4 W	10-S0013-052
R2	RESISTOR, FIXED 220 OHM, PORM 10 PCT, 1/4 W	10-S0013-024
R3	RESISTOR, FIXED 6.8K, PORM 10 PCT, 1/4 W	10-S0013-042
R4	RESISTOR, FIXED 22K, PORM 10 PCT, 1/4 W	10-S0013-048
R5	RESISTOR, FIXED 2.2K, PORM 10 PCT, 1/4 W	10-S0013-036
R6	RESISTOR, FIXED 82 OHM, PORM 10 PCT, 1/4 W	10-S0013-019
R7	RESISTOR, FIXED 470 OHM, PORM 10 PCT, 1/4 W	10-S0013-028
R8,R9	RESISTOR, FIXED 10K, PORM 10 PCT, 1/4 W	10-S0013-044
R10	RESISTOR, FIXED 1K, PORM 10 PCT, 1/4 W	10-S0013-032
R11	RESISTOR, FIXED 100 OHM, PORM 10 PCT, 1/4 W	10-S0013-020
R12	RESISTOR, VARIABLE 5.0K, PORM 20 PCT, 1/4 W	10-S0027-011
R13,R14	RESISTOR, FIXED SAME AS R8	10-S0013-044
R15,R16	RESISTOR, FIXED 1.5K, PORM 10 PCT, 1/4 W	10-S0013-034
R17	RESISTOR, FIXED SAME AS R2	10-S0013-024

REF DESIG	NAME AND DESCRIPTION	SIGNAL/ONE PART NO.
R18	RESISTOR, FIXED 33K, PORM 10 PCT, 1/4 W	10-S0013-050
R19	RESISTOR, FIXED SAME AS R8	10-S0013-044
R20	NOT USED	
R21	RESISTOR, FIXED 680 OHM, PORM 10 PCT, 1/4 W	10-S0013-030
R22	RESISTOR, FIXED SAME AS R10	10-S0013-032
R23	RESISTOR, FIXED SAME AS R2	10-S0013-024
R24	RESISTOR, FIXED SAME AS R8	10-S0013-044
R25	RESISTOR, FIXED SAME AS R11	11-S0013-020
R26,R27	RESISTOR, FIXED SAME AS R15	10-S0013-034
R28	RESISTOR, FIXED 3.3K, PORM 10 PCT, 1/4 W	10-S0013-038
R29	RESISTOR, FIXED SAME AS R18	10-S0013-050
R30	RESISTOR, FIXED SAME AS R5	10-S0013-036
R31	RESISTOR, FIXED 68 OHM, PORM 10 PCT, 1/4 W	10-S0013-018
R32	RESISTOR, FIXED SAME AS R21	10-S0013-030
R33	RESISTOR, FIXED SAME AS R11	10-S0013-020
R34	RESISTOR, FIXED SAME AS R4	10-S0013-048
R35	RESISTOR, FIXED SAME AS R28	10-S0013-038
R36	RESISTOR, FIXED SAME AS R2	10-S0013-024
R37	RESISTOR, FIXED 1.8K, PORM 10 PCT, 1/4 W	10-S0013-035
R38,R39	RESISTOR, FIXED SAME AS R8	10-S0013-044
R40	RESISTOR, FIXED SAME AS R15	10-S0013-034
R41	RESISTOR, FIXED SAME AS R1	10-S0013-052
R42	RESISTOR, FIXED SAME AS R10	10-S0013-032
R43	RESISTOR, FIXED SAME AS R28	10-S0013-038

REF DESIG	NAME AND DESCRIPTION	SIGNAL/ONE PART NO.
R44	RESISTOR, FIXED 47 OHM, PORM 10 PCT, 1/4 W	10-S0013-016
R45,R46	RESISTOR, FIXED SAME AS R8	10-S0013-044
R47	RESISTOR, FIXED SAME AS R15	10-S0013-034
R48	RESISTOR, FIXED SAME AS R18	10-S0013-050
R49	RESISTOR, FIXED 1M, PORM 10 PCT, 1/4 W	10-S0013-068
R50	RESISTOR, FIXED SAME AS R5	10-S0013-036
R51	RESISTOR, FIXED 12K, PORM 10 PCT, 1/4 W	10-S0013-045
R52	RESISTOR, FIXED 4.7K, PORM 10 PCT, 1/4 W	10-S0013-040
R53,R54	RESISTOR, FIXED SAME AS R2	10-S0013-024
R55	RESISTOR, FIXED SAME AS R37	10-S0013-035
R56	RESISTOR, FIXED SAME AS R10	10-S0013-032
R57	RESISTOR, FIXED SAME AS R11	10-S0013-020
R58,R59	RESISTOR, FIXED SAME AS R1	10-S0013-052
R60	NOT USED	
R61	RESISTOR, FIXED SAME AS R1	10-S0013-052
R62	RESISTOR, FIXED SAME AS R11	10-S0013-020
R63	RESISTOR, FIXED SAME AS R15	10-S0013-034
R64	RESISTOR, FIXED SAME AS R2	10-S0013-024
R65,R66	RESISTOR, FIXED 12 OHM, PORM 10 PCT, 1/2 W	10-S0016-011
	COUNTER BOARD A7	
C1	CAPACITOR, FIXED 0.47 UF, +80-20 PCT, 100 V ERIE PART NO. 5865-000-Y5U0-474Z	11-S0006-007
C2,C3	NOT USED	
C4	CAPACITOR, FIXED 0.01 UF, +80-20 PCT, 100 V RMC PART NO. .01TA+80-20PCT	11-S0005-002

REF DESIG	NAME AND DESCRIPTION	SIGNAL/ONE PART NO.
C5	CAPACITOR, FIXED 0.1 UF, +80-20 PCT, 100 V RMC PART NO. .1TA+80-20PCT	11-S0005-006
C6	CAPACITOR, FIXED 0.001 UF, PORM 10 PCT, 100 V RMC PART NO. .001JFPORM10PCT	11-S0005-008
C7	CAPACITOR, FIXED 1 UF, +80-20 PCT, 50 V MALLORY PART NO. MTV-1-N-50-PCB	11-S0007-045
C8	CAPACITOR, FIXED SAME AS C5	11-S0005-006
C9	CAPACITOR, FIXED SAME AS C6	11-S0005-008
C10 THRU C13	CAPACITOR, FIXED SAME AS C5	11-S0005-002
C14	CAPACITOR, FIXED 15 UF, +80-20 PCT, 20 V SPRAGUE PART NO. 164D156X9020B2	11-S0011-002
C15	CAPACITOR, FIXED 0.47 UF, +80-20 PCT, 10 V CENTRALAB PART NO. UK-10-474	11-S0012-001
C16	CAPACITOR, FIXED 56 UF, PORM 20 PCT, 6 V CI PART NO. TS2-006-566-20	11-S0011-005
C17	CAPACITOR, FIXED 1 UF, PORM 10 PCT, 35 V CI PART NO. TS1-035-105-10	11-S0011-006
CR1 THRU CR11	DIODE 1N270	20-S0016-001
CR12	DIODE, ZENER 3.9 V, PORM 10 PCT, 1 W SCHAUER PART NO. SZ3.9	20-S0011-006
IC1 THRU IC3	INTEGRATED CIRCUIT TEXAS INST. PART NO. SN7490N	72-S0005-001
IC4	INTEGRATED CIRCUIT TEXAS INST. PART NO. SN7473N	72-S0004-001
IC5	INTEGRATED CIRCUIT TEXAS INST. PART NO. SN7400N	72-S0001-001
IC6 THRU IC9	INTEGRATED CIRCUIT SAME AS IC1	72-S0005-001
IC10 THRU IC13	INTEGRATED CIRCUIT TEXAS INST. PART NO. SN7441AN	72-S0003-001

REF DESIG	NAME AND DESCRIPTION	SIGNAL/ONE PART NO.
IC14	INTEGRATED CIRCUIT RCA PART NO. CA3028A	72-S0006-001
IC15	INTEGRATED CIRCUIT TEXAS INST. PART NO. SN7420N	72-S0002-001
IC16	INTEGRATED CIRCUIT SAME AS IC4	72-S0004-001
IC17	INTEGRATED CIRCUIT SAME AS IC5	72-S0001-001
P	CONNECTOR, PLUG AMPHENOL PART NO. 61181-2EC /BOARD INTERCONNECTIONS/	16-S0013-001
Q1	TRANSISTOR, NPN 2N5183	20-S0020-001
Q2	TRANSISTOR, NPN 2N5187	20-S0022-001
Q3	TRANSISTOR, NPN SAME AS Q1	20-S0020-001
Q4	TRANSISTOR, NPN SAME AS Q2	20-S0022-001
Q5	TRANSISTOR, NPN SAME AS Q1	20-S0020-001
Q6,Q7	TRANSISTOR, NPN 2N5184	20-S0021-001
Q8	TRANSISTOR, PNP MOTOROLA PART NO. MPS-3702	20-S0005-001
Q9	TRANSISTOR, NPN SAME AS Q6	20-S0021-001
R1,R2	RESISTOR, FIXED 4.7K, PORM 10 PCT, 1/4 W	10-S0013-040
R3,R4	RESISTOR, FIXED 1K, PORM 10 PCT, 1/4 W	10-S0013-032
R5	RESISTOR, FIXED SAME AS R1	10-S0013-040
R6	RESISTOR, FIXED 10K, PORM 10 PCT, 1/4 W	10-S0013-044
R7	RESISTOR, FIXED 100 OHM, PORM 10 PCT, 1/4 W	10-S0013-020
R8	RESISTOR, FIXED 6.8K, PORM 10 PCT, 1/4 W	10-S0013-042
R9,R10	RESISTOR, FIXED 2.2K, PORM 10 PCT, 1/4 W	10-S0013-036
R11	RESISTOR, FIXED SAME AS R1	10-S0013-040
R12,R13	RESISTOR, FIXED SAME AS R3	10-S0013-032
R14	RESISTOR, FIXED 2.7K, PORM 10 PCT, 1/4 W	10-S0013-037

REF DESIG	NAME AND DESCRIPTION	SIGNAL/ONE PART NO.
R15	RESISTOR, FIXED SAME AS R9	10-S0013-036
R16,R17	RESISTOR, FIXED 470 OHM, PORM 10 PCT, 1/4 W	10-S0013-028
R18	RESISTOR, FIXED 3.9K, PORM 10 PCT, 1/4 W	10-S0013-039
R19	RESISTOR, FIXED SAME AS R6	10-S0013-044
R20	RESISTOR, FIXED SAME AS R14	10-S0013-037
R21	RESISTOR, FIXED 15K, PORM 10 PCT, 1/4 W	10-S0013-046
R22 THRU R25	RESISTOR, FIXED 68K, PORM 10 PCT, 1 W	10-S0018-002
R26	RESISTOR, FIXED 8.2K, PORM 10 PCT, 2 W	10-S0020-005
R27 THRU R29	RESISTOR, FIXED SAME AS R1	10-S0013-040
R30	RESISTOR, FIXED 33K, PORM 10 PCT, 1/4 W	10-S0013-050
R31	RESISTOR, FIXED 22K, PORM 10 PCT, 1/4 W	10-S0013-048
R32	RESISTOR, FIXED SAME AS R16	10-S0013-028
R33	RESISTOR, FIXED SAME AS R7	10-S0013-020
R34	RESISTOR, FIXED 1.5K, PORM 5 PCT, 1/4 W	10-S0014-034
R35	RESISTOR, FIXED SAME AS R3	10-S0013-032
R36	RESISTOR, FIXED SAME AS R7	10-S0013-020
R37	RESISTOR, FIXED SAME AS R3	10-S0013-032
R38	RESISTOR, FIXED 56K, PORM 10 PCT, 2 W	10-S0020-007
V1 THRU V4	TUBE, NIXIE BURROUGHS PART NO. B5750	20-S0002-001
	IF BOARD A8	
C1,C2	CAPACITOR, FIXED 0.01 UF, +80-20 PCT, 100 V RMC PART NO. .01TA+80-20PCT	11-S0005-002
C3	CAPACITOR, VARIABLE 2 TO 8 PF ERIE PART NO. 538-011-89A	11-S0020-001

REF DESIG	NAME AND DESCRIPTION	SIGNAL/ONE PART NO.
C4,C5	CAPACITOR, FIXED SAME AS C1	11-S0005-002
C6	CAPACITOR, FIXED 2.2 PF, PORM 0.25 PF, 500 V ERIE PART NO. 301-000-C0J0-229C	11-S0002-006
C7,C8	CAPACITOR, FIXED 0.001 UF, PORM 10 PCT, 100 V RMC PART NO. .001JFPORM10PCT	11-S0005-008
C9 THRU C13	CAPACITOR, FIXED SAME AS C1	11-S0005-002
C14,C15	CAPACITOR, FIXED SAME AS C7	11-S0005-008
C16,C17	CAPACITOR, FIXED SAME AS C1	11-S0005-002
C18	CAPACITOR, FIXED 100 UF, +80-20 PCT, 6 V MALLORY PART NO. MTV-100-N-6-PCB	11-S0007-006
C19	CAPACITOR, FIXED SAME AS C7	11-S0005-008
C20	CAPACITOR, VARIABLE SAME AS C3	11-S0020-001
C21	CAPACITOR, FIXED SAME AS C7	11-S0005-008
C22,C23	CAPACITOR, FIXED SAME AS C1	11-S0005-002
C24	CAPACITOR, FIXED 24 PF, PORM 5 PCT, 500 V CDE PART NO. CM05 ED240 J03	11-S0001-011
C25	CAPACITOR, FIXED 560 PF, PORM 5 PCT, 300 V CDE PART NO. CM05 FC561 J03	11-S0001-044
C26	CAPACITOR, FIXED SAME AS C24	11-S0001-011
C27	CAPACITOR, FIXED SAME AS C1	11-S0005-002
C28	CAPACITOR, FIXED 150 PF, PORM 5 PCT, 500 V CDE PART NO. CM05 FD101 J03	11-S0001-030
C29	CAPACITOR, FIXED SAME AS C1	11-S0005-002
C30	CAPACITOR, FIXED SAME AS C7	11-S0005-008
C31	CAPACITOR, FIXED 3.0 PF, PORM 0.25 PF, 500 V ERIE PART NO. 301-000-C0J0-309C	11-S0002-007
C32	CAPACITOR, FIXED 68 PF, PORM 5 PCT, 500 V CDE PART NO. CM05 ED680 J03	11-S0001-022

REF DESIG	NAME AND DESCRIPTION	SIGNAL/ONE PART NO.
C33	CAPACITOR, FIXED 12 PF, PORM 0.5 PCT, 500 V CDE PART NO. CM05 CD120 D03	11-S0001-006
C34 THRU C39	CAPACITOR, FIXED SAME AS C1	11-S0005-002
C40	CAPACITOR, VARIABLE 5.5 TO 18 PF ERIE PART NO. 538-011-92A	11-S0020-002
C41	CAPACITOR, VARIABLE SAME AS C3	11-S0020-001
C42	CAPACITOR, VARIABLE 9.0 TO 35 PF ERIE PART NO. 538-011-94D	11-S0020-008
C43	CAPACITOR, FIXED SAME AS C7	11-S0005-008
C44 THRU C48	CAPACITOR, FIXED SAME AS C1	11-S0005-002
C49	CAPACITOR, FIXED SAME AS C7	11-S0005-008
C50	CAPACITOR, FIXED SAME AS C33	11-S0001-006
C51	CAPACITOR, FIXED SAME AS C7	11-S0005-008
C52,C53	CAPACITOR, FIXED SAME AS C1	11-S0005-002
C54	CAPACITOR, FIXED SAME AS C25	11-S0001-044
C55	CAPACITOR, FIXED 270 PF, PORM 5 PCT, 500 V CDE PART NO. CM05 FD271 J03	11-S0001-036
C56 THRU C59	CAPACITOR, FIXED SAME AS C1	11-S0005-002
C60	CAPACITOR, FIXED SAME AS C33	11-S0001-006
C61,C62	CAPACITOR, FIXED SAME AS C1	11-S0005-002
C63	CAPACITOR, FIXED SAME AS C28	11-S0001-030
C64 THRU C67	CAPACITOR, FIXED SAME AS C1	11-S0005-002
C68	CAPACITOR, FIXED 82 PF, PORM 0.5 PF, 500 V CDE PART NO. CM05 ED820 J03	11-S0001-024
C69	CAPACITOR, FIXED SAME AS C1	11-S0005-002

REF DESIG	NAME AND DESCRIPTION	SIGNAL/ONE PART NO.
C70	NOT USED	
C71	CAPACITOR, VARIABLE SAME AS C40	11-S0020-002
C72	CAPACITOR, FIXED 100 PF, PORM 5 PCT, 500 V CDE PART NO. CM05 FD101 J03	11-S0001-026
C73	CAPACITOR, FIXED SAME AS C7	11-S0005-008
C74 THRU C80	CAPACITOR, FIXED SAME AS C1	11-S0005-002
C81	CAPACITOR, FIXED 220 PF, PORM 5 PCT, 500 V CDE PART NO. CM05 FD221 J03	11-S0001-034
C82	CAPACITOR, FIXED 18 PF, PORM 0.5 PF, 500 V CDE PART NO. CM05 CD180 D03	11-S0001-008
C83,C84	CAPACITOR, FIXED SAME AS C1	11-S0005-002
C85	CAPACITOR, FIXED SAME AS C7	11-S0005-008
C86	CAPACITOR, FIXED SAME AS C1	11-S0005-002
C87	CAPACITOR, FIXED SAME AS C72	11-S0001-026
C88,C89	NOT USED	
C90	CAPACITOR, FIXED 200 PF, PORM 5 PCT, 500 V CDE PART NO. CM05 FD201 J03	11-S0001-033
C91 THRU C98	CAPACITOR, FIXED SAME AS C1	11-S0005-002
C99	CAPACITOR, FIXED 10 UF, +80-20 PCT, 50 V MALLORY PART NO. MTV-10-N-50-PC8	11-S0007-052
C100 THRU C104	CAPACITOR, FIXED SAME AS C1	11-S0005-002
C105	CAPACITOR, FIXED SAME AS C33	11-S0001-006
C106, C107	CAPACITOR, FIXED SAME AS C1	11-S0005-002
C108	CAPACITOR, FIXED SAME AS C7	11-S0005-008

REF DESIG	NAME AND DESCRIPTION	SIGNAL/ONE PART NO.
C109, C110	CAPACITOR, FIXED SAME AS C1	11-S0005-002
C111	CAPACITOR, FIXED 120 PF, PORM 5 PCT, 500 V CDE PART NO. CM05 FD121 J03	11-S0001-028
C112 THRU C114	CAPACITOR, FIXED SAME AS C1	11-S0005-002
C115	CAPACITOR, FIXED SAME AS C111	11-S0001-028
CR1 THRU CR4	DIODE 1N270	20-S0016-001
CR5	NOT USED	
CR6	DIODE SAME AS CR1	20-S0016-001
CR7 THRU CR10	DIODE 1N456	20-S0017-001
CR11, CR12	DIODE, ZENER 3.9 V, PORM 10 PCT, 1 W SCHAUER PART NO. SZ3.9	20-S0011-006
CR13 THRU CR20	DIODE SAME AS CR7	20-S0017-001
FL1,FL2	FILTER, CRYSTAL	08-S0008-001
FL3	FILTER, CRYSTAL	08-S0010-001
IC1 THRU IC5	INTEGRATED CIRCUIT RCA PART NO. CA-3053	72-S0008-001
J	JACK, FILTER TIP EF JOHNSON PART NO. 264-030 /FL1 THRU FL3 CONNECTIONS/	16-S0001-001
L1	INDUCTOR, VARIABLE	09-S0004-010
L2,L3	INDUCTOR, FIXED 22 UH, PORM 5 PCT JEFFERS PART NO. 4445-7J	09-S0022-025
L4	NOT USED	
L5	INDUCTOR, FIXED SAME AS L2	09-S0022-025

REF DESIG	NAME AND DESCRIPTION	SIGNAL/ONE PART NO.
P	CONNECTOR, PLUG AMPHENOL PART NO. 61181-2EC /BOARD INTERCONNECTIONS/	16-S0013-001
Q1	TRANSISTOR, FIELD EFFECT RCA PART NO. 40468A	20-S0006-001
Q2 THRU Q6	TRANSISTOR, FIELD EFFECT, DUAL GATE RCA PART NO. 40604	20-S0008-001
Q7	TRANSISTOR, NPN, BIPOLAR RCA PART NO. 40235	20-S0009-001
Q8	TRANSISTOR, FIELD EFFECT, DUAL GATE SAME AS Q2	20-S0008-001
Q9	TRANSISTOR, FIELD EFFECT SAME AS Q1	20-S0006-001
Q10	TRANSISTOR, FIELD EFFECT, DUAL GATE SAME AS Q2	20-S0008-001
Q11	TRANSISTOR, FIELD EFFECT, DUAL GATE RCA PART NO. 40603	20-S0007-001
Q12,Q13	TRANSISTOR, NPN, BIPOLAR SAME AS Q7	20-S0009-001
Q14	TRANSISTOR, FIELD EFFECT, DUAL GATE SAME AS Q11	20-S0007-001
Q15	NOT USED	
Q16	TRANSISTOR, NPN, BIPOLAR SAME AS Q7	20-S0009-001
Q17	TRANSISTOR, PNP MOTOROLA PART NO. MPS-3702	20-S0005-001
R1	RESISTOR, FIXED 330K, PORM 10 PCT, 1/4 W	10-S0013-062
R2	RESISTOR, FIXED 33K, PORM 10 PCT, 1/4 W	10-S0013-050
R3	RESISTOR, FIXED 15K, PORM 10 PCT, 1/4 W	10-S0013-046
R4,R5	RESISTOR, FIXED 1K, PORM 10 PCT, 1/4 W	10-S0013-032
R6	RESISTOR, FIXED 220 OHM, PORM 10 PCT, 1/4 W	10-S0013-024
R7	RESISTOR, FIXED SAME AS R4	10-S0013-032
R8	RESISTOR, FIXED SAME AS R3	10-S0013-046
R9,R10	RESISTOR, FIXED SAME AS R2	10-S0013-050
R11	RESISTOR, FIXED 150K, PORM 10 PCT, 1/4 W	10-S0013-058

REF DESIG	NAME AND DESCRIPTION	SIGNAL/ONE PART NO.
R12	RESISTOR, FIXED SAME AS R6	10-S0013-024
R13,R14	RESISTOR, FIXED SAME AS R2	10-S0013-050
R15	RESISTOR, FIXED SAME AS R1	10-S0013-062
R16	RESISTOR, FIXED SAME AS R3	10-S0013-046
R17	RESISTOR, FIXED 100K, PORM 10 PCT, 1/4 W	10-S0013-056
R18	RESISTOR, FIXED 39K, PORM 10 PCT, 1/4 W	10-S0013-051
R19,R20	RESISTOR, FIXED SAME AS R2	10-S0013-050
R21	RESISTOR, FIXED SAME AS R11	10-S0013-058
R22	RESISTOR, FIXED SAME AS R3	10-S0013-046
R23	RESISTOR, FIXED SAME AS R18	10-S0013-051
R24	RESISTOR, FIXED 3.3K, PORM 10 PCT, 1/4 W	10-S0013-038
R25,R26	RESISTOR, FIXED SAME AS R6	10-S0013-024
R27	RESISTOR, FIXED SAME AS R1	10-S0013-062
R28	RESISTOR, FIXED SAME AS R3	10-S0013-046
R29	RESISTOR, FIXED 100 OHM, PORM 10 PCT, 1/4 W	10-S0013-020
R30	RESISTOR, FIXED SAME AS R6	10-S0013-024
R31	RESISTOR, FIXED SAME AS R1	10-S0013-062
R32	RESISTOR, FIXED 470 OHM, PORM 5 PCT, 1/4 W	10-S0014-028
R33	RESISTOR, FIXED 2.2K, PORM 10 PCT, 1/4 W	10-S0013-036
R34	RESISTOR, FIXED SAME AS R2	10-S0013-050
R35	RESISTOR, FIXED SAME AS R3	10-S0013-046
R36	RESISTOR, FIXED 47K, PORM 10 PCT, 1/4 W	10-S0013-052
R37,R38	RESISTOR, FIXED SAME AS R6	10-S0013-024
R39	RESISTOR, FIXED 2.7K, PORM 10 PCT, 1/4 W	10-S0013-037

REF DESIG	NAME AND DESCRIPTION	SIGNAL/ONE PART NO.
R40,R41	RESISTOR, FIXED SAME AS R4	10-S0013-032
R42	RESISTOR, FIXED SAME AS R32	10-S0014-028
R43	RESISTOR, FIXED SAME AS R4	10-S0013-032
R44	RESISTOR, FIXED SAME AS R2	10-S0013-050
R45	RESISTOR, FIXED SAME AS R1	10-S0013-062
R46	RESISTOR, FIXED SAME AS R3	10-S0013-046
R47,R48	RESISTOR, FIXED SAME AS R6	10-S0013-024
R49	RESISTOR, FIXED 10K, PORM 10 PCT, 1/4 W	10-S0013-044
R50,R51	RESISTOR, FIXED SAME AS R32	10-S0014-028
R52	RESISTOR, FIXED SAME AS R49	10-S0013-044
R53	RESISTOR, FIXED SAME AS R4	10-S0013-032
R54	RESISTOR, FIXED SAME AS R49	10-S0013-044
R55	RESISTOR, FIXED SAME AS R2	10-S0013-050
R56	RESISTOR, FIXED SAME AS R36	10-S0013-052
R57	RESISTOR, FIXED SAME AS R18	10-S0013-051
R58	RESISTOR, FIXED SAME AS R6	10-S0013-024
R59	RESISTOR, FIXED 270K, PORM 10 PCT, 1/4 W	10-S0013-061
R60	RESISTOR, FIXED SAME AS R6	10-S0013-024
R61	RESISTOR, FIXED 1.8K, PORM 10 PCT, 1/4 W	10-S0013-035
R62	RESISTOR, FIXED SAME AS R32	10-S0014-028
R63	RESISTOR, FIXED 150 OHM, PORM 10 PCT, 1/4 W	10-S0013-022
R64	RESISTOR, FIXED 1.5K, PORM 10 PCT, 1/4 W	10-S0013-034
R65	RESISTOR, FIXED SAME AS R24	10-S0013-038
R66	RESISTOR, FIXED 10K, PORM 1 PCT, 1/4 W	10-S0015-014

REF DESIG	NAME AND DESCRIPTION	SIGNAL/ONE PART NO.
R67	RESISTOR, FIXED SAME AS R32	10-S0014-028
R68	RESISTOR, FIXED SAME AS R63	10-S0013-022
R69	RESISTOR, FIXED 330 OHM, PORM 10 PCT, 1/4 W	10-S0013-026
R70	RESISTOR, FIXED SAME AS R4	10-S0013-032
R71	RESISTOR, FIXED 1.2K, PORM 10 PCT, 1/4 W	10-S0013-033
R72 THRU R74	RESISTOR, FIXED SAME AS R32	10-S0014-028
R75	RESISTOR, FIXED SAME AS R39	10-S0013-037
R76	RESISTOR, FIXED SAME AS R4	10-S0013-032
R77	RESISTOR, FIXED SAME AS R63	10-S0013-022
R78	RESISTOR, FIXED SAME AS R6	10-S0013-024
R79	RESISTOR, FIXED SAME AS R63	10-S0013-022
R80	RESISTOR, FIXED SAME AS R66	10-S0015-014
R81	RESISTOR, FIXED SAME AS R32	10-S0014-028
R82	RESISTOR, FIXED SAME AS R63	10-S0013-022
R83	RESISTOR, FIXED SAME AS R32	10-S0014-028
R84	RESISTOR, FIXED 6.8K, PORM 10 PCT, 1/4 W	10-S0013-042
R85	RESISTOR, FIXED SAME AS R66	10-S0015-014
R86	RESISTOR, FIXED SAME AS R64	10-S0013-034
R87	RESISTOR, FIXED SAME AS R32	10-S0014-028
R88	RESISTOR, FIXED SAME AS R49	10-S0013-044
R89	RESISTOR, FIXED SAME AS R84	10-S0013-042
R90	RESISTOR, FIXED SAME AS R32	10-S0014-028
R91	RESISTOR, FIXED SAME AS R4	11-S0013-032
R92	RESISTOR, FIXED SAME AS R33	10-S0013-036

REF DESIG	NAME AND DESCRIPTION	SIGNAL/ONE PART NO.
R93	RESISTOR, FIXED SAME AS R32	11-S0014-028
R94	RESISTOR, FIXED SAME AS R4	10-S0013-032
R95	RESISTOR, FIXED SAME AS R32	10-S0014-028
R96	RESISTOR, FIXED SAME AS R29	10-S0013-020
R97	RESISTOR, FIXED SAME AS R2	10-S0013-050
R98	RESISTOR, FIXED 1M, PORM 10 PCT, 1/4 W	10-S0013-068
R99	RESISTOR, FIXED SAME AS R4	10-S0013-032
R100	RESISTOR, FIXED SAME AS R49	10-S0013-044
R101	RESISTOR, FIXED SAME AS R32	10-S0014-028
R102 THRU R104	RESISTOR, FIXED SAME AS R6	10-S0013-024
R105	RESISTOR, FIXED 2.4K, PORM 5 PCT, 1/4 W	10-S0014-087
R106	RESISTOR, FIXED 10K, PORM 1 PCT, 1/4 W	10-S0015-014
R107	RESISTOR, FIXED SAME AS R6	10-S0013-024
R108	RESISTOR, FIXED SAME AS R63	10-S0013-022
R109	RESISTOR, FIXED SAME AS R84	10-S0013-042
T1	TRANSFORMER, VARIABLE	09-S0004-008
T2	TRANSFORMER, VARIABLE	09-S0004-009
T3	TRANSFORMER, VARIABLE	09-S0004-003
T4	NOT USED	
T5	TRANSFORMER, FIXED	09-S0005-002
T6	TRANSFORMER, VARIABLE	09-S0003-004
T7	TRANSFORMER, FIXED	09-S0010-003
T8	TRANSFORMER, VARIABLE	09-S0003-003

REF DESIG	NAME AND DESCRIPTION	SIGNAL/ONE PART NO.
T9	NOT USED	
T10	TRANSFORMER, VARIABLE	09-S0003-001
	AGC DETECTOR BOARD A9	
C1 THRU C3	CAPACITOR, FIXED 0.1 UF, +80-20 PCT, 100 V ERIE PART NO. 805-000-X5V0-103Z	11-S0005-002
C4	CAPACITOR, FIXED 220 PF, PORM 5 PCT, 500 V CDE PART NO. CM05 FD221 J03	11-S0001-034
C5	NOT USED	
C6 THRU C10	CAPACITOR, FIXED SAME AS C1	11-S0005-002
C11	CAPACITOR, FIXED 1.0 UF, +80-20 PCT, 50 V MALLORY PART NO. MTV-1-N-50-PCB	11-S0007-045
C12	CAPACITOR, FIXED 10 UF, +80-20 PCT, 50 V MALLORY PART NO. MTV-10-N-50-PCB	11-S0007-052
C13 THRU C15	CAPACITOR, FIXED SAME AS C1	11-S0005-002
C16	CAPACITOR, FIXED 100 UF, +80-20 PCT, 6 V MALLORY PART NO. MTV-100-N-6-PCD	11-S0007-006
C17	CAPACITOR, FIXED 0.022 UF, PORM 10 PCT, 100 V MALLORY PART NO. PVC-1122	11-S0022-002
C18	CAPACITOR, FIXED 100 UF, +80-20 PCT, 35 V MALLORY PART NO. MTV-100-N-35-PDE	11-S0007-042
C19	CAPACITOR, FIXED SAME AS C1	11-S0005-002
C20	CAPACITOR, FIXED SAME AS C11	11-S0007-045
C21 THRU C26	CAPACITOR, FIXED SAME AS C1	11-S0005-002
C27	NOT USED	
C28	CAPACITOR, FIXED SAME AS C1	11-S0005-002
C29	CAPACITOR, FIXED 150 PF, PORM 5 PCT, 500 V CDE PART NO. CM05 FD151 J03	11-S0001-030

REF DESIG	NAME AND DESCRIPTION	SIGNAL/ONE PART NO.
C30	CAPACITOR, VARIABLE 2.4 TO 24.5 PF EF JOHNSON PART NO. 189-509-5	11-S0028-001
C31	CAPACITOR, FIXED 18 PF, PORM 0.5 PF, 500 V CDE PART NO. CM05 CD100 D03	11-S0001-008
C32	CAPACITOR, FIXED SAME AS C18	11-S0007-042
C33	CAPACITOR, FIXED 330 PF, PORM 5 PCT, 500 V CDE PART NO. CM05 FD331 J03	11-S0001-038
C34	CAPACITOR, FIXED 3000 PF, PORM 10 PCT, 500 V CDE PART NO. CM06 FD302 J03	11-S0001-061
C35	CAPACITOR, FIXED 0.47 UF, +80-20 PCT, 25 V ERIE PART NO. 5865-000-Y5U0-474Z	11-S0006-007
C36	CAPACITOR, FIXED 0.1 UF, PORM 10 PCT, 100 V	11-S0005-006
C37	CAPACITOR, FIXED SAME AS C35	11-S0006-007
C38,C39	CAPACITOR, FIXED 0.001 UF, PORM 10 PCT, 100 V RMC PART NO. 0.001JFPORM10PCT	11-S0005-008
C40	CAPACITOR, FIXED SAME AS C11	11-S0007-045
C41	CAPACITOR, FIXED, NON POLARIZED 1 UF, +80-20 PCT, 20 V MALLORY PART NO. MTV-1-N-20-N-PCB	11-S0007-061
C42	CAPACITOR, FIXED 50 UF, +80-20 PCT, 50 V MALLORY PART NO. MTV-50-N-50-PDE	11-S0007-057
C43	CAPACITOR, FIXED 4.7 UF, PORM 10 PCT, 35 V SPRAGUE PART NO. 164D-475X9035B2	11-S0011-004
C44	CAPACITOR, FIXED 2 PF, PORM .25 PF, 500 V ERIE PART NO. 301-000-C0K0-209C	11-S0002-005
C45	CAPACITOR, FIXED SAME AS C1	11-S0005-002
CR1,CR2	DIODE 1N456	20-S0017-001
CR3	DIODE, ZENER 3.9 V, PORM 10 PCT, 1 W SCHAUER PART NO. SZ3.9	20-S0011-006
CR4 THRU CR7	DIODE, HOT CARRIER HEWLETT-PACKARD PART NO. 5082-2800	20-S0010-001

REF DESIG	NAME AND DESCRIPTION	SIGNAL/ONE PART NO.
CR8	DIODE 1N270	20-S0016-001
CR9	DIODE SAME AS CR1	20-S0017-001
IC1	INTEGRATED CIRCUIT RCA PART NO. CA3028A	72-S0006-001
L1,L2	INDUCTOR, FIXED 22 UH, PORM 5 PCT JEFFERS PART NO. 4445-7J	09-S0022-025
L3	INDUCTOR, FIXED 2.2 UH, PORM 10 PCT JEFFERS PART NO. 4425-10K	09-S0022-012
L4	INDUCTOR, FIXED 3 MH, PORM 5 PCT JEFFERS PART NO. 1312-30J	09-S0023-035
P	CONNECTOR, PLUG AMPHENOL PART NO. 61181-2EC /BOARD INTERCONNECTIONS/	16-S0013-001
Q1	TRANSISTOR, NPN RCA PART NO. 2N5183	20-S0020-001
Q2	TRANSISTOR, PNP MOTOROLA PART NO. MPS-3702	20-S0005-001
Q3 THRU Q5	TRANSISTOR, NPN SAME AS Q1	20-S0020-001
Q6	TRANSISTOR, FIELD EFFECT, DUAL GATE RCA PART NO. 40604	20-S0008-001
Q7	TRANSISTOR, NPN SAME AS Q1	20-S0020-001
Q8	TRANSISTOR, FIELD EFFECT, DUAL GATE SAME AS Q6	20-S0008-001
Q9	TRANSISTOR, FIELD EFFECT RCA PART NO. 40468A	20-S0006-001
Q10 THRU Q14	TRANSISTOR, NPN SAME AS Q1	20-S0020-001
R1	RESISTOR, FIXED 6.8K, PORM 10 PCT, 1/4 W	10-S0013-042
R2	NOT USED	
R3	RESISTOR, FIXED 3.3K, PORM 10 PCT, 1/4 W	10-S0013-038
R4	RESISTOR, FIXED 330 OHM, PORM 10 PCT, 1/4 W	10-S0013-026
R5,R6	NOT USED	
R7	RESISTOR, FIXED 1K, PORM 5 PCT, 1/4 W	10-S0014-032

REF DESIG	NAME AND DESCRIPTION	SIGNAL/ONE PART NO.
R8,R9	RESISTOR, FIXED 10K, PORM 10 PCT, 1/4 W	10-S0013-044
R10	RESISTOR, FIXED 220 OHM, PORM 10 PCT, 1/4 W	10-S0013-024
R11	RESISTOR, FIXED SAME AS R7	10-S0014-032
R12 THRU R14	RESISTOR, FIXED SAME AS R8	10-S0013-044
R15	RESISTOR, FIXED 1M, PORM 10 PCT, 1/4 W	10-S0013-068
R16	RESISTOR, FIXED 4.7K, PORM 5 PCT, 1/4 W	10-S0014-040
R17	RESISTOR, FIXED SAME AS R7	10-S0014-032
R18	RESISTOR, FIXED 2.2K, PORM 10 PCT, 1/4 W	10-S0013-036
R19	RESISTOR, FIXED 180 OHM, PORM 10 PCT, 1/4 W	10-S0013-023
R20	RESISTOR, FIXED 22K, PORM 10 PCT, 1/4 W	10-S0013-048
R21	RESISTOR, FIXED SAME AS R10	10-S0013-024
R22	RESISTOR, FIXED SAME AS R8	10-S0013-044
R23	RESISTOR, FIXED 390 OHM, PORM 10 PCT, 1/4 W	10-S0013-027
R24,R25	NOT USED	
R26	RESISTOR, VARIABLE 2.5K, PORM 20 PCT, 1/4 W	10-S0027-029
R27	RESISTOR, FIXED SAME AS R10	10-S0013-024
R28	RESISTOR, FIXED 15K, PORM 10 PCT, 1/4 W	10-S0013-046
R29	RESISTOR, FIXED 2.2K, PORM 10 PCT, 1/4 W	10-S0013-036
R30,R31	RESISTOR, FIXED SAME AS R10	10-S0013-024
R32	RESISTOR, FIXED 470 OHM, PORM 5 PCT, 1/4 W	10-S0014-028
R33	RESISTOR, FIXED 1K, PORM 5 PCT, 1/4 W	10-S0014-032
R34,R35	RESISTOR, FIXED SAME AS R8	10-S0013-044
R36	RESISTOR, FIXED 100K, PORM 10 PCT, 1/4 W	10-S0013-056
R37,R38	RESISTOR, FIXED SAME AS R10	10-S0013-024

REF DESIG	NAME AND DESCRIPTION	SIGNAL/ONE PART NO.
R39,R40	RESISTOR, FIXED SAME AS R16	10-S0014-040
R41	RESISTOR, FIXED 680 OHM, PORM 10 PCT, 1/4 W	10-S0013-030
R42	RESISTOR, FIXED 100 OHM, PORM 10 PCT, 1/4 W	10-S0013-020
R43	RESISTOR, FIXED SAME AS R8	10-S0013-044
R44	RESISTOR, FIXED 470K, PORM 10 PCT, 1/4 W	10-S0013-064
R45	RESISTOR, FIXED SAME AS R8	10-S0013-044
R46	PESISTOR, FIXED SAME AS R7	10-S0014-032
R47	RESISTOR, FIXED 47 OHM, PORM 5 PCT, 1/4 W	10-S0014-016
R48,R49	RESISTOR, FIXED SAME AS R16	10-S0014-040
R50	RESISTOR, FIXED 150 OHM, PORM 10 PCT, 1/4 W	10-S0013-022
R51	RESISTOR, FIXED 6.2K, PORM 5 PCT, 1/4 W	10-S0014-088
R52	RESISTOR, FIXED 2.2K, PORM 10 PCT, 1/4 W	10-S0013-036
R53	RESISTOR, FIXED 18K, PORM 5 PCT, 1/4 W	10-S0014-047
R54	RESISTOR, FIXED SAME AS R28	10-S0013-046
R55	RESISTOR, FIXED 2.7K, PORM 10 PCT, 1/4 W	10-S0013-037
R56	RESISTOR, FIXED SAME AS R7	10-S0014-032
R57	RESISTOR, VARIABLE 5K, PORM 20 PCT, 1/4 W	10-S0027-011
R58	RESISTOR, FIXED 1.2K, PORM 10 PCT, 1/4 W	10-S0013-033
R59	RESISTOR, FIXED 560 OHM, PORM 10 PCT, 1/4 W	10-S0013-029
R60	RESISTOR, FIXED SAME AS R7	10-S0014-032
T1,T2	TRANSFORMER, FIXED	09-S0025-001
Y1	CRYSTAL 100 KHZ	13-S0001-001

REF DESIG	NAME AND DESCRIPTION	SIGNAL/ONE PART NO.
	POWER AMPLIFIER ASSEMBLY A10	
A10A1	UPPER POWER AMPLIFIER ASSEMBLY	03-S0003-001
C1	CAPACITOR, VARIABLE 10.0 TO 140.0 PF HAMMARLUND PART NO. MC 140S	11-S0014-001
C2	CAPACITOR, VARIABLE 15.0 TO 467.0 PF TRW PART NO. 467 PF	11-S0016-001
L1	INDUCTOR, FIXED	09-S0016-001
S1	SWITCH	07-S0001-001
A10A3	TUBE BOX ASSEMBLY	03-S0004-001
C1	CAPACITOR, FIXED /FEEDTHRU/ 0.001 UF, PORM 20 PCT, 500 V ERIE PART NO. 357-000-X5U0-102M	11-S0024-001
C2,C3	CAPACITOR, FIXED 1000 PF, PORM 5 PCT, 500 V ELMENCO PART NO. DM-19-102J	11-S0029-001
C4	CAPACITOR, FIXED SAME AS C1	11-S0024-001
C5	CAPACITOR, FIXED SAME AS C2	11-S0029-001
C6	CAPACITOR, FIXED SAME AS C1	11-S0024-001
CR1	DIODE ATLANTIC PART NO. 75A1	20-S0014-001
L1	INDUCTOR, FIXED 100 UH, PORM 5 PCT JEFFERS PART NO. 1315-12J	09-S0022-041
R1	RESISTOR, FIXED 390 OHM, PORM 5 PCT, 2 W	10-S0026-002
R2	RESISTOR, FIXED 560 OHM, PORM 10 PCT, 1 W	10-S0018-003
XV1	SOCKET, TUBE MYCALEX PART NO. CP464-2	19-S0004-001
A10A2	LOWER POWER AMPLIFIER ASSEMBLY	03-S0005-001
C1 THRU C4	CAPACITOR, VARIABLE 4.2 TO 24 PF HAMMARLUND PART NO. 9434-45-10060	11-S0015-001
C5	CAPACITOR, FIXED 50 PF, PORM 10 PCT, 7,500 V CENTRALAB PART NO. 850-S-50Z	11-S0025-001
C6	CAPACITOR, FIXED 20 PF, PORM 10 PCT, 7,500 V CENTRALAB PART NO. 853-A-20Z	11-S0026-001

REF DESIG	NAME AND DESCRIPTION	SIGNAL/ONE PART NO.
C7	CAPACITOR, VARIABLE SAME AS C1	11-S0015-001
C8	CAPACITOR, VARIABLE 65 TO 340 PF ELMENCO PART NO. 303M /WITH DOUBLE MICA INSULATION/	11-S0018-002
C9	CAPACITOR, VARIABLE 65 TO 340 PF ARCO PART NO. 304M	11-S0030-001
C10,C11	CAPACITOR, VARIABLE SAME AS C8	11-S0018-002
C12 THRU C18	CAPACITOR, FIXED /FEEDTHRU/ 0.001 UF, PORM 20 PCT, 500 V ERIE PART NO. 375-000-X5U0-102M	
C19,C20	CAPACITOR, FIXED SAME AS C6	11-S0026-001
J1 THRU J13	NOT USED	
J14	CONNECTOR	16-S0002-001
K1	RELAY, REED	47-S0001-001
L1,L2	INDUCTOR, FIXED 22 UH, PORM 10 PCT JEFFERS PART NO. 4424-1K	09-S0031-001
L3,L4	INDUCTOR, FIXED 100 UH, PORM 5 PCT JEFFERS PART NO. 1315-12J	09-S0022-041
L5,L6	PART OF SWITCH ASSEMBLY S1	
R1	RESISTOR, FIXED 470 OHM, PORM 10 PCT, 1/4 W	10-S0013-028
S1	SWITCH ASSEMBLY	07-S0011-001
A10A4	REFLECTOMETER ASSEMBLY	03-S0006-001
C1,C2	CAPACITOR, FIXED 180 PF, PORM 5 PCT, 500 V CDE PART NO. CM05 FD181 J03	11-S0001-032
C3,C4	CAPACITOR, VARIABLE 2 TO 8 PF ERIE PART NO. 538	11-S0020-001
CR1,CR2	DIODE 1N270	20-S0016-001
R1,R2	RESISTOR, FIXED 4.32K, PORM 1 PCT, 1/4 W	10-S0015-015
R3,R4	RESISTOR, FIXED 22 OHM, PORM 10 PCT, 1/4 W	10-S0016-002
T1	TRANSFORMER, FIXED	09-S0018-001

REF DESIG	NAME AND DESCRIPTION	SIGNAL/ONE PART NO.
	S2 BOARD A11	
S1	NOT USED	
S2A THRU S2E	SWITCH ASSEMBLY	07-S0002-001
	HI-PASS FILTER BOARD A12	
C1	CAPACITOR, FIXED 3,000 PF, PORM 5 PCT, 500 V CORNELL DUBILIER PART NO. CM06-FD302J03	11-S0001-061
C2,C3	CAPACITOR, FIXED 1,000 PF, PORM 5 PCT, 500 V CORNELL DUBILIER PART NO. CM05-FA102J03	11-S0001-050
C4	CAPACITOR, FIXED SAME AS C1	11-S0001-061
L1	INDUCTOR, FIXED 10 UH, PORM 10 PCT JEFFERS PART NO. 4445-10K	09-S0022-020
L2	INDUCTOR, FIXED 2.2 UH, PORM 10 PCT JEFFERS PART NO. 4425-10K	09-S0022-012
L3	INDUCTOR, FIXED SAME AS L1	09-S0022-020
P1	CONNECTOR, PLUG SWITCHCRAFT PART NO. 3501M	16-S0011-001
P	CONNECTOR, PLUG AMPHENOL PART NO. 61181-2EC /BOARD INTERCONNECTIONS/	16-S0013-001
	TERMINAL BOARD ASSEMBLY TB1	
R1	RESISTOR, FIXED 8.2K, PORM 10 PCT, 1/4 W	10-S0016-010
R2	RESISTOR, FIXED 10K, PORM 10 PCT, 1/4 W	10-S0013-044
R3	RESISTOR, FIXED 3.24K, PORM 1 PCT, 1/4 W	10-S0015-012
R4	RESISTOR, FIXED 150 OHM, PORM 10 PCT, 1/4 W	10-S0013-022
R5	RESISTOR, FIXED 4.7K, PORM 10 PCT, 1/4 W	10-S0013-040
R6	RESISTOR, FIXED 3.4K, PORM 1 PCT, 1/4 W	10-S0015-013
	S3 BOARD A13	
S1,S2	NOT USED	
S3A THRU S3F	SWITCH ASSEMBLY	07-S0001-001

ERRATA I - 26 April 1971

Page

2-17 Revise paragraph 2.3.4.2 to read as follows:

Calibrate Using "WWV."

a. Set the "MODE" selector switch to the "USB" position.

b. Turn the "IF SHIFT" control to the "-1.5" position.

NOTE

The same end-result of steps a. and b. above can also be obtained by using "LSB" and setting the "IF SHIFT" control to the "+1.5" position.

c. Set the "MHZ" band selector switch to the "14" position.

d. Tune in "WWV" at the high end of this band using either "VFO A" or "VFO B."

NOTE

The frequency counter may not indicate ".000.0" after step e. is accomplished.

e. Zero-beat the carrier of WWV using applicable VFO control.

f. Pull out the "PULL TO CALIBRATE" control. When this control is pulled out, two audio tones will be heard. One tone is a result of beating the 150th harmonic of the 100 kHz frequency standard in the Model CX7 with the carrier of WWV. The second tone is a result of the error in the frequency scheme in the Model CX7 and the 150th harmonic of the 100 kHz frequency standard in the Model CX7.

g. Insert a small screwdriver through the special cut-out on the top right-hand side of the Model CX7 cover (refer to Figure 2-3 for exact location) and adjust C30 on the AGC board for a zero beat. (This is best accomplished when WWV is transmitting a steady carrier.) This zero beat is a result of the 150th harmonic of the internal frequency standard in the Model CX7 and the carrier of WWV beating together. The 100 kHz internal frequency standard in the Model CX7 is now calibrated against WWV.

h. To calibrate the Model CX7 on the 14 MHz band:

1. Rotate the applicable VFO for a counter display of ".000.0."
2. Rotate the "PULL TO CALIBRATE" control for a zero beat.
3. Push in "PULL TO CALIBRATE" control.
4. The Model CX7 is now calibrated on the 14 MHz band.

i. To calibrate the Model CX7 on each of its other bands, refer to paragraph 2.3.4.

2-17 Delete paragraph 2.3.4.3.

2-18 Change Figure 2-3 to read:

Figure 2-3. Capacitor C30 Location.

2-24 Revise paragraph 2.4.5 to read as follows:

AM Transmission

a. Set the "MODE" selector switch to the "AM" position.

b. With the Model CX7 in the receive position ("PTT" switch depressed), set the "PUSH-TO-TALK" switch on the microphone to the "ON" or "TALK" position; or depress the "TRANSMIT" switch on the Model CX7.

NOTE

Do not talk into the microphone while performing step c.

c. Adjust the "OUTPUT" control for a forward power indication of 1.8 (refer to Table 2-4, page 2-20).

d. Talk into the microphone in a normal manner and adjust the "CLIPPING" control for a peak forward power indication of 2.4 on voice peaks.

Page

2-24 (cont) e. Depress the "PTT" switch to return the Model CX7 to the receive position. The Model CX7 is now aligned for "am" operation.

3-34 Change Table 3-2 as follows:

Lines 4, 5, and 6 in the In XMIT column should read B.

4-8 Interchange wafers G and E.

4-33 Add the following to step 2, paragraph e. RF Driver Board:

If a short Phillips-head screwdriver cannot be obtained, it will be necessary to remove the counter assembly and the transmit control push-button assembly in order to remove the Phillips-head screw located in that corner of the board.

4-37 Change Table 4-2 as follows:

Pin 132 voltage in Voltage and Resistance column should read +34.0 ±0.5 VDC.

4-52 Delete contact identification diagram for switch S7 as shown in Figure 4-29 and insert the following:

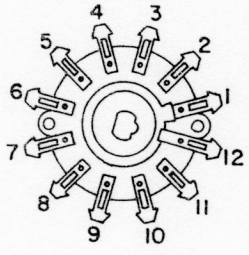

REAR VIEW
WAFERS B, C, E, F, G
SWITCH S7

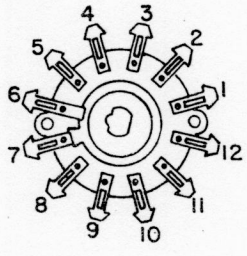

REAR VIEW
WAFER D
SWITCH S7

5-5 In Figure 5-4: C39 should read C59, and C58 (right-hand side of illustration) should read C57.

5-17 Change step 13 to read: Adjust IF board capacitor C71.

5-18 Change step 20 to read: Adjust IF board capacitor C3.

6-3 Wire 103, in To column should read P3-8.

6-10 Wire 394 in Color column should read BLUE.

Wire 395 in Color column should read BROWN.

Wire 402 in Color column should read VIOLET.

6-13/ 6-14 The C20, L1 node near the A7 Counter assembly should be connected to the opposite end of feedthrough capacitor C37 (C37 functions as an ordinary capacitor).

7-24 R8 change to read: RESISTOR, FIXED, 4.7K, PORM 10 PCT, 1/4W, 10-S0013-040.

7-25 R46 change to read: RESISTOR, FIXED, 1K, PORM 10 PCT, 1/4W, 10-S0013-032.

7-26 C4 change to read: CAPACITOR, FIXED SAME AS C1, 11-S0005-006.

7-26 C10 change to read: CAPACITOR, FIXED SAME AS C2, 11-S0005-002.

7-27 Q1 change to read: TRANSISTOR, FIELD EFFECT TYPE 2N5485, 20-S0029-001.

7-28 Q5 change to read: TRANSISTOR, NPN TYPE 2N3391, 20-S0027-001.

7-31 C10 change to read: CAPACITOR, FIXED SAME AS C5, 11-S0005-006.

7-42 R109 change to read: RESISTOR, FIXED SAME AS R4, 10-S0013-032.

7-45 IC1 change to read: INTEGRATED CIRCUIT RCA PART NO. CA-3053, 72-S0008-001.

7-49 C12 THRU C18 change to read: CAPACITOR, FIXED/FEEDTHRU/0.001 UF, PORM 20 PCT, 500V ERIE PART NO. 357-000-X5U0-102M, 11-S0024-001.