PRELIMINARY

INSTRUCTION BOOK

for

RADIO TRANSMITTING SET AN/URT-12

RADIOMARINE CORPORATION OF AMERICA
75 VARICK STREET
NEW YORK 13, N. Y.

U. S. COAST GUARD

TREASURY DEPARTMENT

THIS HISTORICAL TECHNICAL DOCUMENT IS DEDICATED TO ALL THE RADIOMEN WHO SERVED IN THE COAST GUARD OF THE UNITED STATES OF AMERICA.



The AN/URT-12 is today a quite rare AM+CW radio transmitter covering 2-30MHz. It is capable of about 90-100 watts carrier on AM and 100W on CW. It was used exclusively by the Coast Guard. At the time of this pringing, it is believed that there are only 4 of these radio transmitters left in the world. It is believed that only two are complete and unmodified. This is believed to be the last CW+AM-only HF transmitter model before SSB was put in use.

The document contains many blank pages, but only where the backside of a leaf was blank. This is due to the copying process and while I think it preserves the character and reassembleability of the document, others may not wish to print those sheets.

This document was scanned by Patrick Jankowiak KD5OEI and Patrick Jankowiak reseves all rights to this electronic copy except where those rights may be superceded by those of RADIOMARINE CORPORATION OF AMERICA, the original provider of the transmitter and the paper document.

You may freely distribute this document as long as no fee is charged.
It may not be sold or leased. It may not be disassembled, edited, or made part of another work unless these notices remain intact. It may not be bundled with other products which are for sale or lease or are promotional to any product for sale.
It may be bundled with other free technical manuals. If you paid for a copy of this document you have been cheated. Take your funds back. This document is to be distributed for free on the internet and other places.

Mode 1-17-57 DCS

October 24, 1955

Temporary Correction T-1 to Preliminary Instruction Book
for Radio Transmitting Set AN/URT-12

This temporary correction is in effect immediately. It provides for the addition of one rf coil and a new rf bypass capacitor. Included also is a change in fuse rating, a change in capacitor value and the deletion of a coupling. These changes apply to all equipments supplied on Contracts Tcg-38554 and Tcg-39978.

Make the following pen-and-ink corrections. Insert this temporary correction in the technical manual immediately after the front cover.

Page 2-5, paragraph 2c
(1) Line 15- After "L421" Add "L432"

Page 2-7,8
(1) Add "L432" below "L422"

On page 5-3, Table 5-2, Revise as follows:

TABLE 5-2 FUSE LOCATION

SYMBOL	LOCATION	PROTECTS	AMPS	VOLTS	STANDARD NAVY STOCK NUMBERS
F203 F205 F208			2		17-F-17411 17-F-17410 17-F-17410

On page 8-1 , Table 8-1, Revise as follows:

TABLE 8-1 TABLE OF REPLACEABLE PARTS

REF SYMBOL	STD NAVY STOCK NO.	NAME AND DESCRIPTION	LOCATING FUNCTION
C310	16-C-31269-9494	CAPACITOR, FIXED, MICA DIELECTRIC: 1200 uuf, ±5% tolerance; 500v dc working; Jan Type CM30D122J.	
C315		Same as C310	
C324		Same as C310	
C433	16-C-31908-1564	CAPACITOR, FIXED, MICA DIELECTRIC: 2200 uuf, ±10% tolerance, 500v dc, Jan Type CM30B222K.	
C469		Same as C451	PA plate tank rf bypass

October 24, 1955

Temporary Correction T-1 to Preliminary Instruction Book
for Radio Transmitting Set AN/URT-12 (continued)

REF SYMBOL	STD NAVY STOCK NO.	NAME AND DESCRIPTION	LOCATING FUNCTION
F205	17-F-17410	FUSE, CARTRIDGE: 1 amp, 250v ac, instantaneous; ferrule type, 3/8 in. dia by 3/8 in. lg; laminated body; non-renewable fuse, indicating type; o/a 1-1/2 in. lg by 3/8 in. dia; Bussman Mfg. Co. St. Louis, No; Type MIN (1 amp, 250v)	
F208		Same as F205	
E211		Same as F205	
F215		Same as F201	
F216		Same as F205	
L432		COIL, RADIO, FREQUENCY: 2 turns of 3/16 silver plated copper tubing; terminal mounted by two 5/32 in. drill holes, one on each end; Radiomarine Dwg No. A-14100.	PA medium frequency tank circuit
0427		Not Used	

Page following 8-47: Schematic Drawing

(1) Add capacitor C469 (1000 uuf, 5000 volts). One lead to a point between R466 and L419, the other lead to ground.

(2) Add rf coil L432 as shown below:

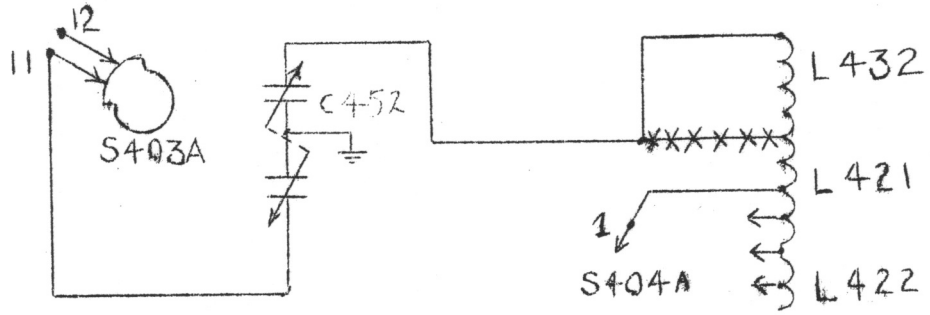

(3) Change value of C310 from "820" uuf to "1200" uuf.

(4) Change value of F203 from "1A" to "2A".

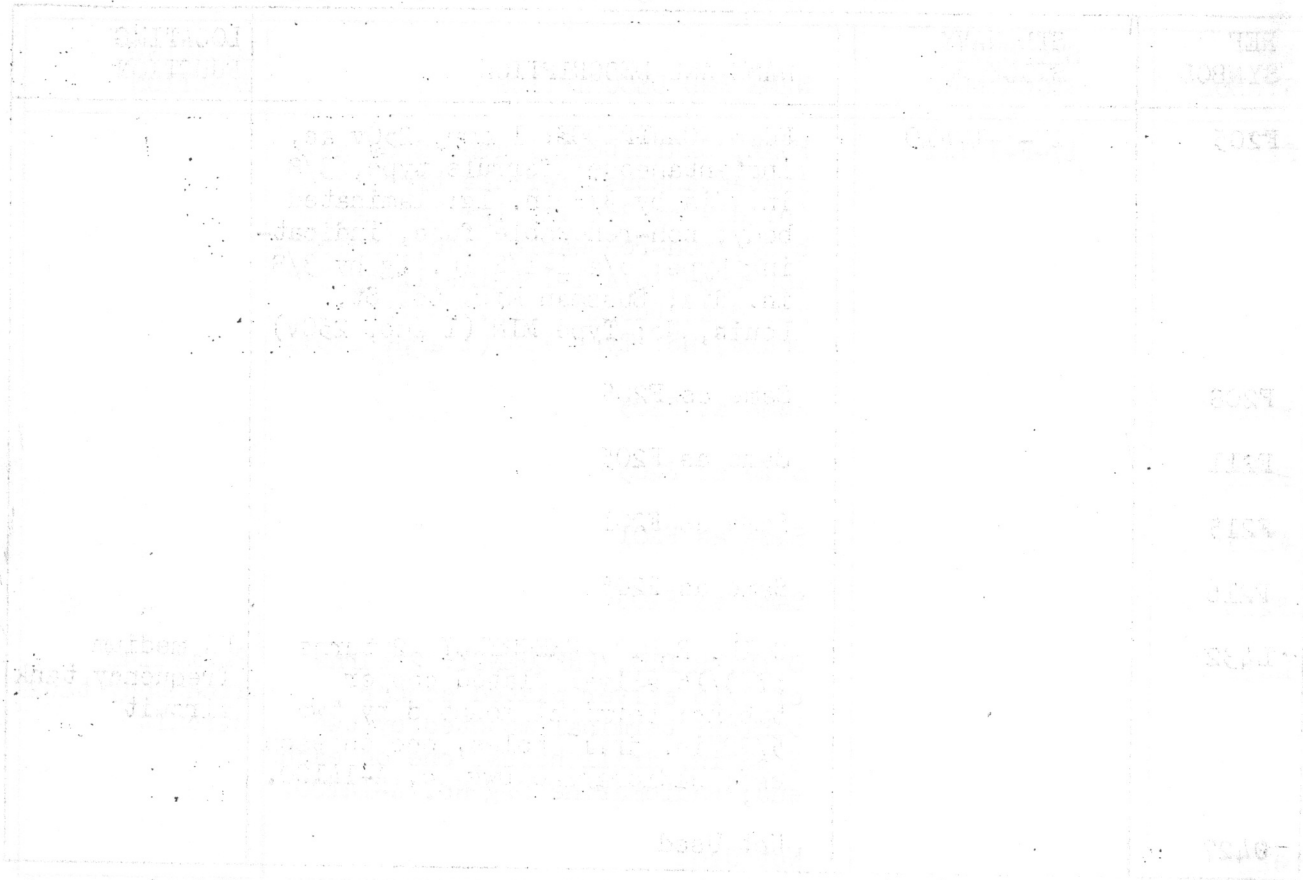

PRELIMINARY

INSTRUCTION BOOK

for

RADIO TRANSMITTING SET AN/URT-12

RADIOMARINE CORPORATION OF AMERICA
75 VARICK STREET
NEW YORK 13, N. Y.

U. S. COAST GUARD

TREASURY DEPARTMENT

Contracts Tcg-38554
Tcg-39978

Approved by C. G. Headquarters: 15 September 1955

TABLE OF CONTENTS

SECTION 1 - GENERAL DESCRIPTION

Paragraph		Page
		1-1
1.	Scope of Instruction Book	1-1
2.	Purpose and Basic Principles	1-3
3.	Description of Units	1-5
4.	Reference Data	1-8
5.	Electrical Characteristics	
	SECTION 2 - THEORY OF OPERATION	
		2-1
1.	General	2-2
2.	Radio Frequency Circuits	2-10
3.	Audio Circuits	2-13
4.	Keying Circuits	2-15
5.	Power Supply Circuits	2-16
6.	Control Circuits	2-18
7.	Measurement and Indication Circuits	
	SECTION 3 - INSTALLATION	
		3-1
1.	Unpacking	3-1
2.	Withdrawal of Units from the Cabinet	3-1
3.	Inspection of Equipment	3-2
4.	Installation	3-6
5.	Initial Adjustment	3-8
6.	Initial Start-Up	3-9
7.	Initial Tuning	3-10
8.	Transmitter Performance Tests	
	SECTION 4 - OPERATION	
		4-0
1.	Introduction	4-1
2.	Operational Features	4-2
3.	Controls	4-2
4.	Starting the Transmitter	4-6
5.	Tuning the Transmitter	4-7
6.	Loading and Matching the Antenna	4-15
7.	Phone Operation (A-3)	4-15
8.	External Master Oscillator Operation	4-16
9.	Remote Operation	4-16
10.	Stopping the Transmitter	4-17
11.	Summarized Operating Procedure	4-18
12.	Operating Data	

TABLE OF CONTENTS (Cont'd)

SECTION 5 - OPERATOR'S MAINTENANCE

Paragraph		Page
1.	Introduction	5-1
2.	Operator's Check Chart	5-1
3.	Emergency Maintenance	5-1

SECTION 6 - PREVENTIVE MAINTENANCE

1.	Introduction	6-0
2.	Preventive Maintenance Schedule	6-0
3.	Lubrication	6-0

SECTION 8 - PARTS LISTS

LIST OF ILLUSTRATIONS

SECTION 1 - GENERAL DESCRIPTION

Figure	Title	Page
1-1	Radio Transmitting Set AN/URT-12, Relationship of Units	1-0
1-2	Radio Transmitter T-408/URT-12	1-2
1-3	Power Supply PP-950/URT-12	1-4

SECTION 2 - THEORY OF OPERATION

2-1	Radio Transmitting Set AN/URT-12, Block Diagram	2-3, 4
2-2	Simplified Radio and Audio Frequency Circuits	2-7, 8
2-3	Keying Circuit	2-11, 12
2-4	Power Distribution Circuit	2-14
2-5	Control and Protection Circuits	2-17

SECTION 3 - INSTALLATION

3-1	Unpacking Procedure	3-0
3-2	Outline and Mounting Dimensions	3-3, 4
3-3	External Cabling for AN/URT-12	3-7, 8
3-4	Remote Control Connections	3-11, 12
3-5	AN/URT-12, Internal Cabling Diagram	3-13

SECTION 4 - OPERATION

4-1	IPA Tuning Calibration (Typical)	4-8
4-2	PA Tuning Calibration (Typical)	4-9
4-3	Starting the Transmitter	4-20
4-4	Tuning the Transmitter	4-21, 22

SECTION 5 - OPERATOR'S MAINTENANCE

5-1	Location of Tubes and Crystals	5-9, 10

ADDITIONAL

Dwg J-132	Radio Transmitting Set AN/URT-12, Schematic	Following 8-47

LIST OF TABLES

SECTION 1 - GENERAL DESCRIPTION

Table	Title	Page
1-1	Equipment Supplied	1-6
1-2	Equipment Required But Not Supplied	1-7
1-3	Shipping Data	1-9
1-4	Vacuum Tube Complement	1-10

SECTION 2 - THEORY OF OPERATION

2-1	Transmitter Harmonic Multiplication	2-6

SECTION 3 - INSTALLATION

3-1	Recommended Remote Control Cables	3-5

SECTION 4 - OPERATION

4-1	Band Selection Chart	4-0
4-2	Crystal Frequency Range	4-1
4-3	Controls and Indicators-Location and Function	4-3
4-4	Recommended Initial Antenna Range Position	4-12
4-5	Typical Dial Settings	4-19
4-6	Typical Meter Readings	4-19

SECTION 5 - OPERATOR'S MAINTENANCE

5-1	Routine Check Chart	5-2
5-2	Fuse Location	5-4
5-3	Symptoms of Fuse Failure	5-5
5-4	Replacement of Indicator Lamps	5-7

SECTION 6 - PREVENTIVE MAINTENANCE

6-1	Preventive Maintenance Schedule	6-2

SECTION 8 - PARTS LISTS

8-1	Table of Replaceable Parts	8-2
8-2	Maintenance Parts Kits	8-47

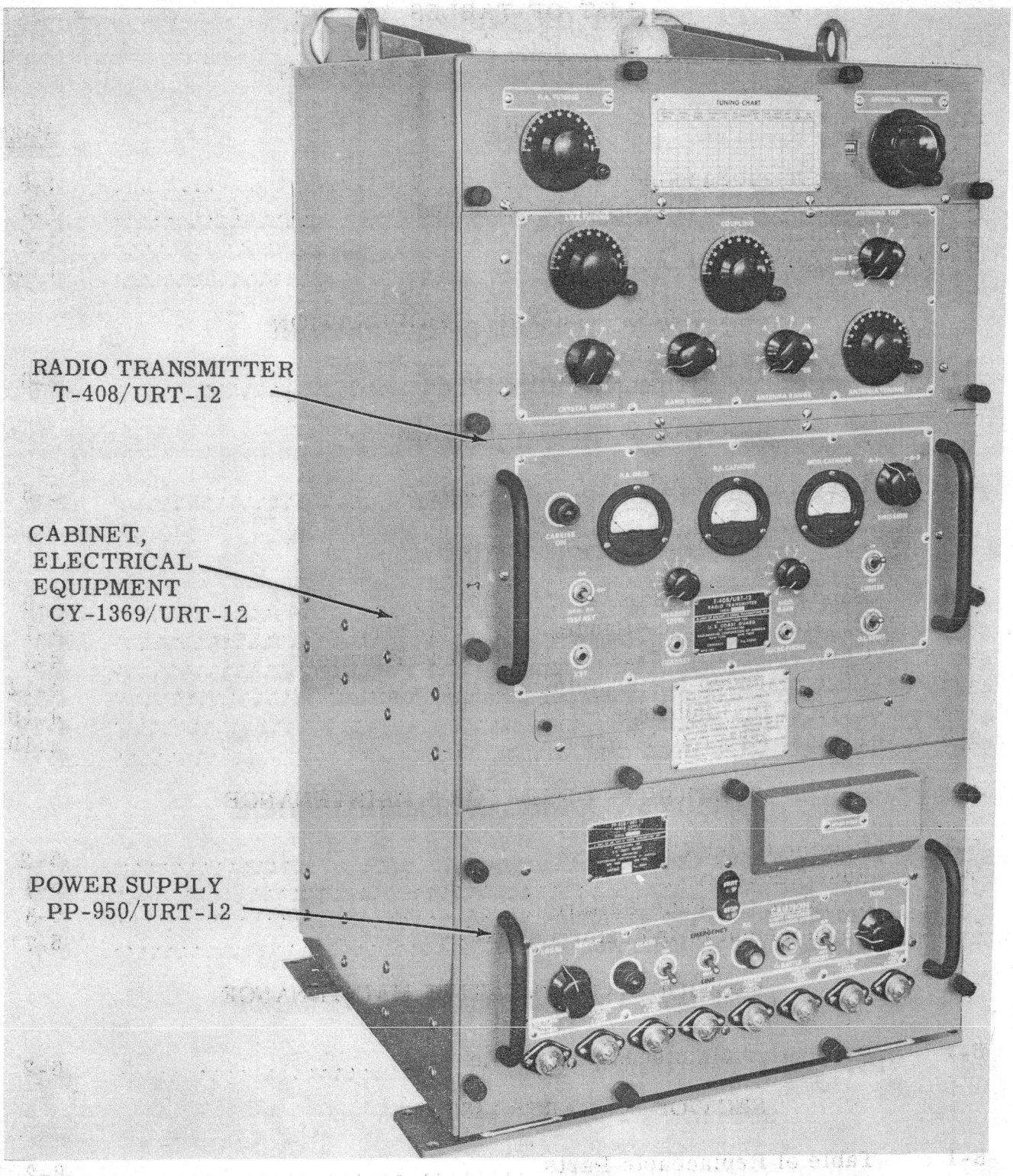

Figure 1-1. Radio Transmitting Set AN/URT-12, Relationship of Units

SECTION 1

GENERAL DESCRIPTION

1. SCOPE OF INSTRUCTION BOOK.

This instruction book contains descriptive material, theory of operation and instructions for installation, operation and maintenance of Radio Transmitting Set, AN/URT-12. The equipment is being delivered on Contracts Tcg-38554, Tcg-39978.

2. PURPOSE AND BASIC PRINCIPLES.

a. Radio Transmitting Set AN/URT-12 (Figure 1-1) is intended for use on Coast Guard vessels and at Coast Guard radio communication shore stations under widely varying climatic conditions. It provides a complete radio transmitting facility with the exception of antenna, power source, channel frequency crystals, keying and phone equipment. The transmitter has been designed to operate at ambient temperatures between -15 deg. and +65 deg. C (5 deg. and 149 deg. F) and in a relative humidity up to 95 percent.

b. The equipment is capable of continuous operation on CW (A-1 emission) or voice (A-3 emission) with a nominal output of 100 watts for A-1 and 75 watts for A-3, within the frequency range of 2 to 30 mc. The equipment will operate on any frequency in the specified range for which it is tuned. Provisions for connecting an external master oscillator or use of any one of ten crystals have been incorporated to add flexibility to the transmitter. The equipment is designed for operation into an antenna having an RF resistance between 5 and 1800 ohms and a reactance from plus 2000 to minus 2000 ohms. All potentials necessary for the operation of the transmitter are derived within the equipment from a 115 volt, 50 or 60 cycle, single phase ac power source. the transmitter may be operated from a remote location with the use of a standard 6-wire remote unit. A HEADSET jack is also provided for use with a receiver monitor.

c. EQUIPMENT DESCRIPTION.- The transmitter consists of two sliding-drawer type units mounted one above the other in a braced sheet steel cabinet, finished in gray. It occupies a floor space of 21-1/2 inches by 26-7/16 inches with the drawers closed and is 38-3/4 inches high overall. The unit in the bottom of the Cabinet, Electrical Equipment CY-1369/URT-12, is Power Supply PP-950/URT-12. Above the Power Supply is Radio Transmitter T-408/URT-12, which includes the exciter section and the modulator section. These two sections may be readily separated Each of the units is of drawer-type construction and may be pulled forward to give access for minor servicing and adjustment. Convenient insulated handles are provided on the front panel of each unit. All necessary controls, adjustments and indicators for service operation

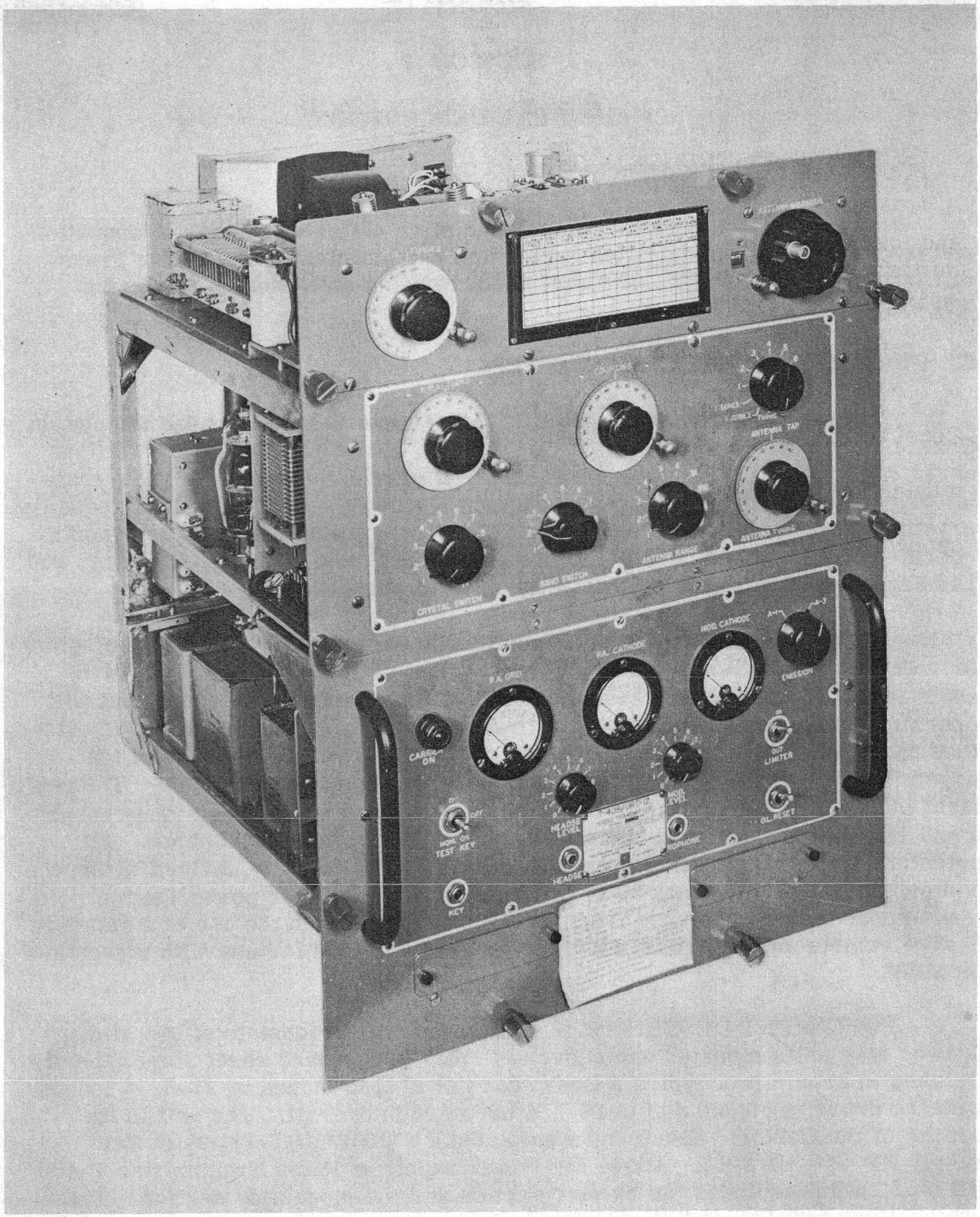

Figure 1-2. Radio Transmitter T-408/URT-12

of the equipment are on the front panels of the units. A blower is provided for adequate filtered ventilation and tube cooling. Cables for interconnection of the units are mounted in the cabinet. The necessary power input cables are not supplied. The complete equipment consists of the major units and accessories listed in Table 1-1 and is shown in Figure 1-1. The Radio Transmitter T-408/URT-12 is shown in Figure 1-2 and Power Supply PP-950/URT-12 is shown in Figure 1-3.

3. DESCRIPTION OF UNITS.

a. RADIO TRANSMITTER T-408/URT-12 (See Figure 1-2).

The Radio Transmitter unit is composed of two sections. The top section contains the shielded ten channel crystal oscillator, the intermediate power amplifier, power amplifier and the antenna matching network. The lower section includes the audio circuits and most of the transmitter control circuits.

Nine available radio frequency bands are selected from the front panel. Provisions are made for connecting an external master oscillator (not supplied) to add versatility to the equipment. The desired output carrier is obtained by selecting the different tuned circuit in each of the r f bands to double and quadruple the fundamental crystal frequency. The antenna matching network is so designed to load the transmitter output into antennas of varied characteristic. The antenna matching controls and tuning meters are clearly marked with their respective function on the front panel. Dial locks are provided for all tuning dial controls. This complete unit is ventilated with an exhaust type blower located on the top center of this section.

The lower section of the Radio Transmitter contains the audio and control circuits. The audio circuit includes a low and high frequency conpensator network to provide a flat audio response from 200 to 2500 cycles. The audio output is fed to a pair of 4-65A balanced modulators operating in push-pull. The network includes a limiter circuit to clip the peak of high level audio to prevent over-modulation and allow a high average modulation level. The amount of modulator cathode current, when operating on voice transmission, is indicated on the front panel MOD. CATHODE meter. A front panel control is provided to permit resetting the modulator and power amplifier overload relays, which act in event of electrical overloads, to protect component parts in the equipment.

Facilities are incorporated for automatic or manual keying. A head phone jack is provided for monitoring communication and operates in conjunction with a volume level control to adjust the output to the operators headphone. Phone operation includes a MOD. GAIN control to compensate for background noise and speakers voice level.

Insulated handles located on the front panel are used to withdraw the unit from the cabinet,on drawer slides,to a stop position for servicing. The two sections of this unit may be separated to permit servicing of each section individually or together. Two test cables are provided for this purpose.

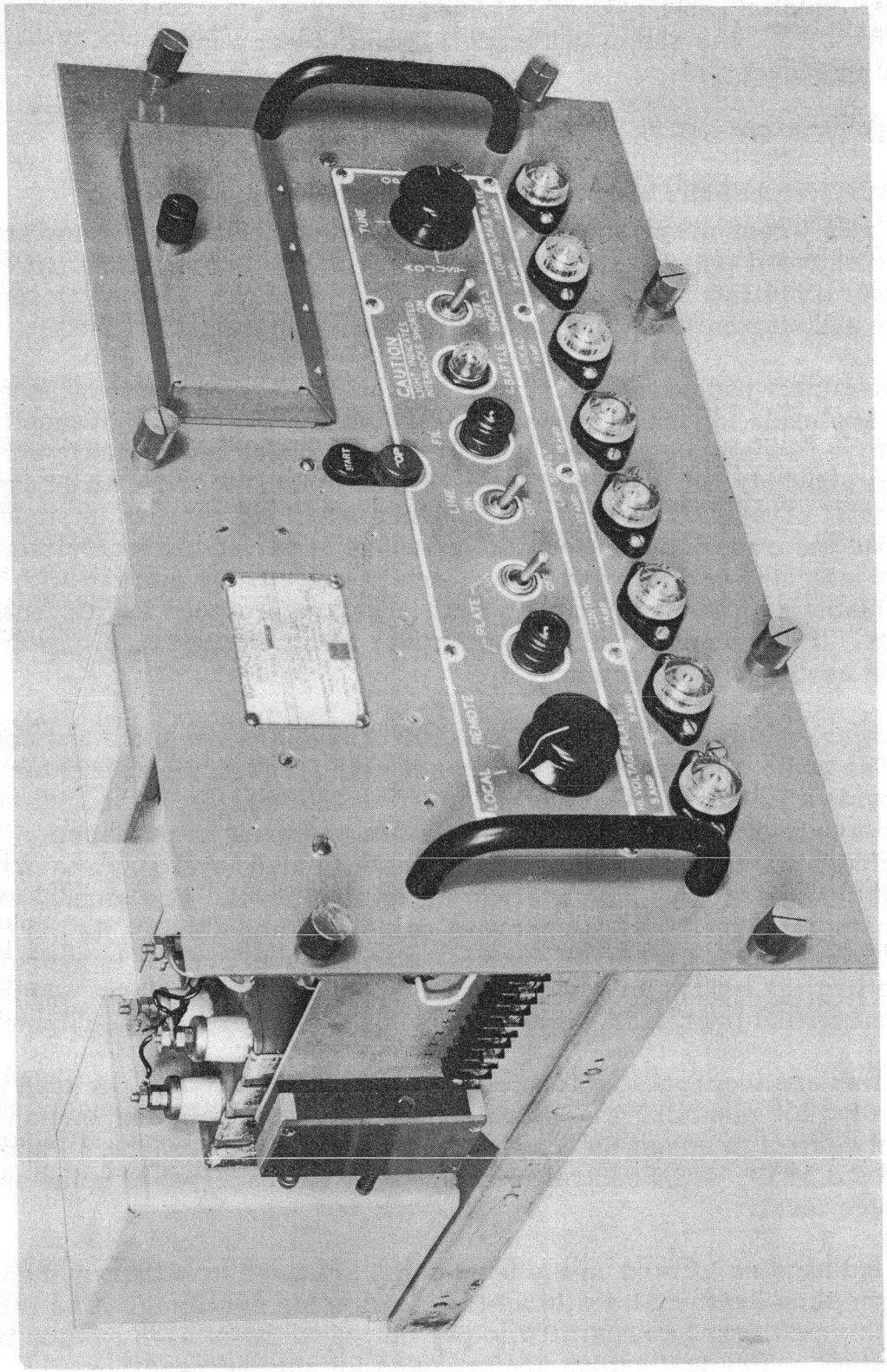

Figure 1-3. Power Supply PP-950/URT-12

b. POWER SUPPLY PP-950/URT-12 (See Figure 1-3).

The Power Supply, located at the bottom of the cabinet, contains the high and low voltage plate rectifier and the main power input circuit. The EMERGENCY-LINE switch on the front panel acts as the main power switch, controlling application of all power to the equipment. Line fuses and rectifier fuses are all clearly marked with their associated circuits on the front panel. Spare fuses are found in the SPARE FUSES compartment. The high voltage rectifier, used to supply filtered 1500 volts dc to the PA and modulator tube plates, is a two-tube full-wave type and is provided with a two section filter. When the power supply is withdrawn to the service position on drawer slides, the ac power for the plate rectifiers is removed and the dc side of the HV rectifier is grounded to protect personnel. This unit includes a BATTLE SHORT switch for use when interlocks are incapacitated by shock due to gunfire or other cause.

c. CABINET, ELECTRICAL EQUIPMENT (See Figure 1-1).

The sheet steel cabinet is reinforced and braced to support the two transmitter sub-units and provides a complete enclosure. Units are held in place by thumbscrews through the front panels and rest on the drawer slides at the sides. All interconnecting cables are installed in the cabinet and are provided with plug terminations. Power input and remote control terminal boards at the lower rear side of the cabinet may be connected to external cables through a covered access hole at the back of the cabinet. An air filter is located at the bottom of the cabinet and can be removed for cleaning. The cabinet is provided with four shock and vibration mounts at the bottom. These are attached to two horizontal plates for ease of mounting to the operating room table. Two snubber brackets are provided at the top rear for attachment of the equipment to a vertical bulkhead as additional support for the equipment.

4. REFERENCE DATA

a. NOMENCLATURE. Radio Transmitting Set AN/URT-12

b. CONTRACT DATA. Contract No. Tcg-38554 dated 25 June 1951 and Contract No. Tcg-39978 dated 24 June 1955.

c. CONTRACTOR. Radiomarine Corporation of America, 75 Varick Street, New York 13, New York

d. COGNIZANT NAVAL INSPECTOR. Inspector of Electronic Material, U. S. Coast Guard Supply Center, Jersey City, N.J.

e. SHIPPING DATA.

(1) NUMBER OF BOXES. Three.
(2) EQUIPMENT SPARES. Included.
(3) TOTAL CUBICAL CONTENTS.
(a) CRATED - cubic feet
(b) UNCRATED - cubic feet

TABLE 1-1. EQUIPMENT SUPPLIED

Quantity Per Equipment	Name of Unit	Designation	Overall Dimensions			Volume	Weight
			Height	Width	Depth		
1	Radio Transmitting Set consisting of:	AN/URT-12	38-3/4	21-1/2	26-7/16	12.7	324
1	Cabinet, Electrical Equipment	CY-1369/URT-12	38-3/4	21-1/2	24-1/2	11.8	76
1	Power Supply	PP-950/URT-12	10-15/16	19-5/8	20	2.5	117
1	Radio Transmitter	T-408/URT-12	24-1/8	19-5/8	20-1/4	5.5	131
2 Boxes	Maintenance Parts Kit (and Spare Tubes)	———					210
2 Sets	Servicing Diagrams	———	13-1/2	10	———	———	1
2	Instruction Books	CG-273-30	11	8-1/2	3/8	.04	4
1 Set	Test Cable	———	———	———	———	———	5

TABLE 1-2. EQUIPMENT REQUIRED BUT NOT SUPPLIED

QUAN. PER EQUIP.	NAME OF UNIT	TYPE DESIGNATION	REQUIRED USE	REQUIRED CHARACTERISTICS
1 to 10 (as required)	Crystals	CR-18/U	Channel frequency determination	Within frequency range 2 to 7.5 mc Operating temperature -55 deg C to +90 deg C.
1	Antenna	---	RF output	5 to 1800 ohms rf resistance, ±2000 ohms reactance.
1 (when desired)	Remote Control Unit	Similar to Navy Type 23423	Remote control of start-stop, keying and phone transmission.	Standard "6-wire remote".
1	Remote Control Cables	MHFA-10, MHFA-7, TTHFWA-1-1/2 or equivalent.	Connection of Remote Control Unit.	One 10 conductor, one 7 conductor, one 3 conductor twisted.
1 (when desired)	Automatic Keyer	---	High-speed keying of transmitter.	Up to 100 wpm for A-1 emission.
1	Frequency Meter	---	Monitoring transmitter output.	Range 2 to 30mc: loosely coupled to transmitter.
1	Power Input Cable	DHFA-9 or equivalent	Connection to power source.	Per MIL-C-915A 10 to 50 ft. lg., 2 No. 12 AWG or larger conductors.
1 (when required)	Master Oscillator	---	Alternative for Crystal Oscillator.	Frequency range 2 to 7.5 mc. Output minimum 1 volt at 50 ohms impedance.

(4) TOTAL WEIGHT
(a) CRATED - pounds
(b) UNCRATED - pounds

(5) For details see Tables 1-1 and 1-3.

5. ELECTRICAL CHARACTERISTICS

a. FREQUENCY RANGE. 2 to 30 megacycles.
TYPE OF FREQUENCY CONTROL. Crystal with provision for external master oscillator (not supplied).
NUMBER OF CRYSTAL CHANNELS. Ten.
TUNING. Continuously tuning over entire range in nine bands.

b. TYPES OF EMISSION. Continuous wave telegraphy (A-1) or voice modulated (A-3).
AUDIO INPUT - 20db to 0 (0db = 6 mw.) into 600 ohm impedance.
AUDIO RESPONSE. 200 to 2500 cycles flat within ±3 db from the 1000 cycle value.
COMPRESSION. Above 70 percent modulation, 10 db increase in input results in less than 3 db change in modulation level.
MODULATION CAPABILITY. 100 percent.

c. KEYING TYPE. On-off (electron tube).
KEYING SPEED: CW. Up to 100 words per minute.

d. CONTROL. Local or remote start-stop, phone and keying, manual or automatic.
REMOTE CONTROL UNIT. Standard 6 wire unit similar to Navy Type-23423 (not supplied on this contract).

e. NOMINAL RF OUTPUT.
A-1 emission-----2mc to 12mc -- 100 watts
12mc to 26mc -- 80 watts
26mc to 30mc -- 60 watts
A-3 emission--at 95% modulation, 75% of A-1 effective power
Includes sideband power when modulated.
Power is measured into a 75 ohm dummy antenna.
ANTENNA CHARACTERISTICS. Operates into antenna having rf resistance between 5 and 1800 ohms and reactance of plus 2000 to minus 2000 ohms.
SPURIOUS RADIATION. Minimum of 50 db below 100 percent modulation.
HUM LEVEL. Less than 1 % of value equivalent to 100 % modulation.

f. FREQUENCY CONTROL: Crystals
TYPE. CR-18/U
NUMBER REQUIRED. One to ten
FREQUENCY RANGE. 2 to 7.5 megacycles
OPERATING TEMPERATURE. -55° C. to +90° C. (-67° F. to +194° F.)

g. FREQUENCY ACCURACY AND STABILITY. Within ±0.01 percent of the desired carrier frequency.

h. CONDITIONS OF OPERATION. Continuously operates under any combination of the following conditions:

(1) Ambient temperature -15 deg. C (5 deg. F) to 65 deg. C (149 deg. F).
(2) Relative Humidity up to 95 percent.
(3) Line voltage within ±10 percent.
(4) Line frequency within ±5 percent.

WARM-UP TIME. 30 seconds for plate time delay.

i. POWER SUPPLY DATA. Power supply required -115 volts, 50 or 60 cycles, one phase ac.

TRANSMITTER CONDITIONS	LINE CURRENT AMPS	TOTAL KVA	POWER FACTOR	POWER KW
Standby (Plate switch off)	1.64	0.20	0.94	0.188
Key Up	3.13	0.40	0.90	0.36
Key Down (A-1 emission)	5.9	0.78	0.87	0.68
Key Down (A-3 emission)	6.8	0.85	0.92	0.78

j. HEAT DISSIPATION DATA. Approximately 707 watts.

k, EQUIPMENT DATA. Tables 1-1 to 1-4 include pertinent data regarding the material supplied, shipping data and the vacuum tubes required for this equipment.

TABLE 1-3. SHIPPING DATA

SHIPPING BOX NO.	CONTENTS		OVERALL DIM.			Volume	Weight
	NAME OF UNIT	DESIGNATION	Height	Width	Depth		
1	Radio Transmitting Set. Includes 2 Instruction Books and Test Cables, less Crystals.	AN/URT-12	45	25	30	19.0	590
2	Maintenance Parts Kit.	———	30	23	30	12.0	270
3	Maintenance Parts (Tubes)	———	15	10	15	1.3	125

TABLE 1-4. VACUUM TUBE COMPLEMENT

SYMBOL DESIGNATION	TUBE TYPE	FUNCTION	QUANTITY
POWER SUPPLY PP-950/URT-12			
V201	5R4WGY	Low Voltage Rectifier	1
V202	5R4WGY	Low Voltage Rectifier	1
V203	3B28	High Voltage Rectifier	1
V204	3B28	High Voltage Rectifier	1
RADIO TRANSMITTER T-408/URT-12			
V301	12AX7	Limiter	1
V302	12AT7	Audio Compensator	1
V303	12AX7	Audio Amplifier and Phase Inverter	1
V304	12AX7	Audio Driver	1
V305	4-65A	Modulator	1
V306	4-65A	Modulator	1
V401	12AT7	Oscillator Amplifier	1
V402	6005/6AQ5W	R. F. Amplifier	1
V403	6005/6AQ5W	Amplifier Multiplier	1
V404	807	Amplifier Multiplier	1
V405	6BG6G	Keying Tube	1
V406	6005/6AQ5W	Screen Grid Clamper	1
V407	4-65A	Power Amplifier	1
V408	4-65A	Power Amplifier	1

Type	Quan.
5R4WGY	2
3B28	2
12AX7	3
12AT7	2
4-65A	4
807	1
6005	3
6BG6G	1

SECTION 2

THEORY OF OPERATION

1. GENERAL

a. INTRODUCTION. - This section contains a detailed description of the electrical theory of operation and mechanical functioning of the entire equipment. After a discussion of the general functions of the component units, detailed circuit analysis and mechanical operation of the radio frequency, audio frequency, power, control, and measuring circuits is given. Circuits will be described in a logical functional order rather than with regard to physical location in the equipment. Figure 2-1 shows in block form the basic circuitry of the complete transmitter. The complete schematic diagram is Figure 7- ____.

b. RADIO FREQUENCY CIRCUITS. - Referring to Figure 2-1, the basic frequency determining circuit is the ten-channel crystal oscillator (one-half of V401). CRYSTAL SWITCH S401 provides selection of any one of the ten crystals or use of an external master oscillator (not supplied). The other half of V401 acts as an rf amplifier and maintains minimum loading on the oscillator. The signal from V401 passes through rf amplifier V402 which also provides buffer action. The next two stages amplifier-multiplier V403 and IPA amplifier-multiplier V404 provide additional amplification to drive the power amplifier. For carrier frequencies above 7.5 mc, V403 doubles the signal frequency and, for frequencies above 15 mc, V404 also doubles the signal frequency. The two power amplifiers V407 and V408 are fed in parallel and operate at the carrier frequency. A clamper tube, V406, maintains the power amplifier screen voltage at the desired value when the transmitter is keyed. The plate circuit of the power amplifier is tuned by a network of inductors and capacitors to cover the entire range of 2 to 30 mc. Output from the PA is fed into a tuning and matching network having a combination of tapped inductance and a variable capacitor to resonate with any antenna having characteristics of rf resistance between 5 and 1800 ohms with reactance between minus 2000 to plus 2000 ohms.

c. AUDIO CIRCUITS. - Energy from the microphone is fed through microphone transformer T301 to LIMITER switch S301. With this switch in the IN position the signal is fed to the grid of audio amplifier V301 which acts as a limiter to cut off peaks of modulation. Adjustment of thelimiting action of this tube allows for a high average level of modulation without overmodulation. With LIMITER switch in the OUT position V301 is bypassed. The limited signal from V301 or the bypassed signal is then fed through a high and low frequency compen-

sating amplifier. First, the complete signal is fed to the low frequency compensating network and then to one-half of a type 12AT7 dual triode, V302, where it is amplified. This amplified signal is then applied to the high frequency compensating network and on to V302B where it is further amplified. By this means the frequencies below 200 cps and above 2500 cps are sharply cut off while the frequencies between 200 and 2500 cps produce an output response which is flat within ±3 db. The corrected audio signal is fed into phase inverter tube, V303, which inverts the phase of one-half of the signal to produce a push-pull signal for application to push-pull driver amplifier V304. The push-pull driver output feeds the two modulator tubes (V305 and V306) and the modulator output is combined in modulation transformer T302. Output of the modulation transformer is used to modulate both the screen grid of the IPA tube V403 and the plates of the power amplifiers, V407 and V408.

d. KEYING CIRCUIT. - The keying circuit is a combination of electronic keying with a series of relays used to provide delay in part of the keying circuit. For manual (low-speed) keying, the telegraph key or TEST KEY S302 grounds the grid of the keyer tube V405 which allows IPA tube V404 to pass signals. Within a short time interval the series of relays keys the grids of the amplifier half of V401 and of rf amplifier V402, thus keying the carrier on. For higher speed keying, the delay in the relay circuits results in V401 and V402 remaining in the keyed condition long enough to bridge the "key off" time. Thus, at high keying speeds only the IPA tube is keyed.

e. POWER CIRCUITS. - The power supply system of the transmitter includes two filament transformers, one supplying the tubes in the transmitter unit and the other the Power Supply rectifiers, two rectifier power supplies located in the Power Supply unit and one in the transmitter unit. The 115 v., 50 to 60 cps, single phase source feeds the transformer primaries through appropriate switches, relays and fuses. High voltage dc (1500 v) for the modulator and power amplifiers is supplied from H. V. rectifier tubes V203 and V204 in a full-wave center-tapped circuit fed from plate transformer T203. Low voltage dc (550 v) for plates, screens and for bias voltage is supplied by L. V. rectifier tubes V201 and V202 in a full-wave center-tapped circuit fed from L. V. plate transformer T201. Microphone voltage and 12 v dc for some of the control relays is supplied by metallic (selenium) rectifier CR302 with saturable reactor L302 fed from rectifier transformer T303 in the transmitter unit

2. RADIO FREQUENCY CIRCUITS

The radio frequency circuits of the transmitter are shown in simplified form in Figure 2-2 and in complete form in Figure 7- ___.

a. RF OSCILLATOR. - The basic frequency determining circuit is an untuned ten-channel crystal oscillator V401, a type 12AT7 dual triode located in the Radio Transmitter T-408/URT-12. An input jack J403 which is connected to CRYSTAL SW. S401 in position eleven provides for use of an external master oscillator. RF is generated in the oscillator section of V401 at the crystal frequency, then amplified in the other half section of the sametube. The oscillator uses the crystal

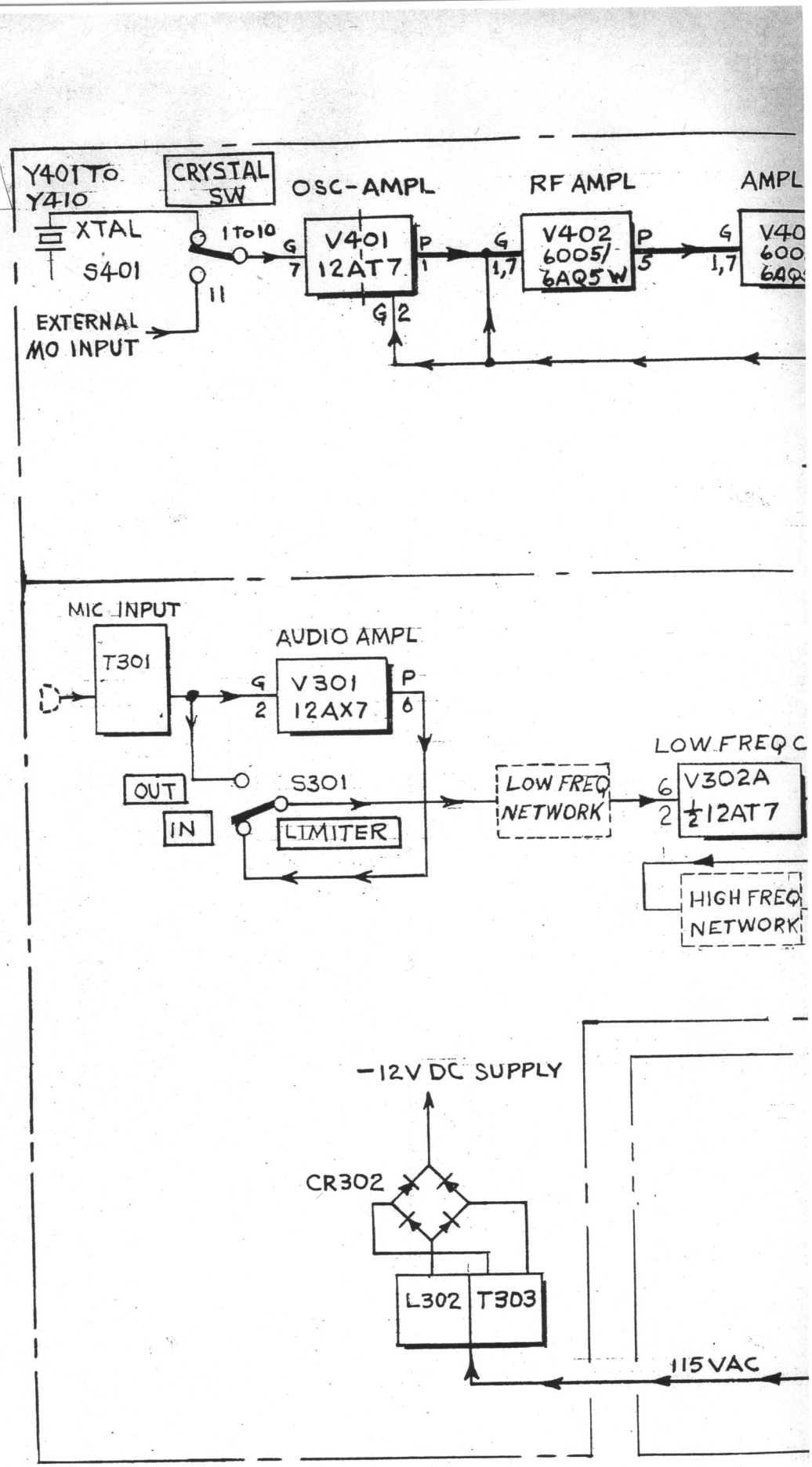
Y401 To Y410
CRYSTAL SW
OSC-AMPL
RF AMPL
AMPL
XTAL
S401
1 To 10
11
EXTERNAL MO INPUT
V401 12AT7
V402 6005/ 6AQ5W
G
P
7
1
1,7
5
2
MIC INPUT
T301
AUDIO AMPL
V301 12AX7
6
OUT
IN
S301
LIMITER
LOW FREQ NETWORK
LOW FREQ C
V302A ½12AT7
HIGH FREQ NETWORK
-12V DC SUPPLY
CR302
L302
T303
115 VAC

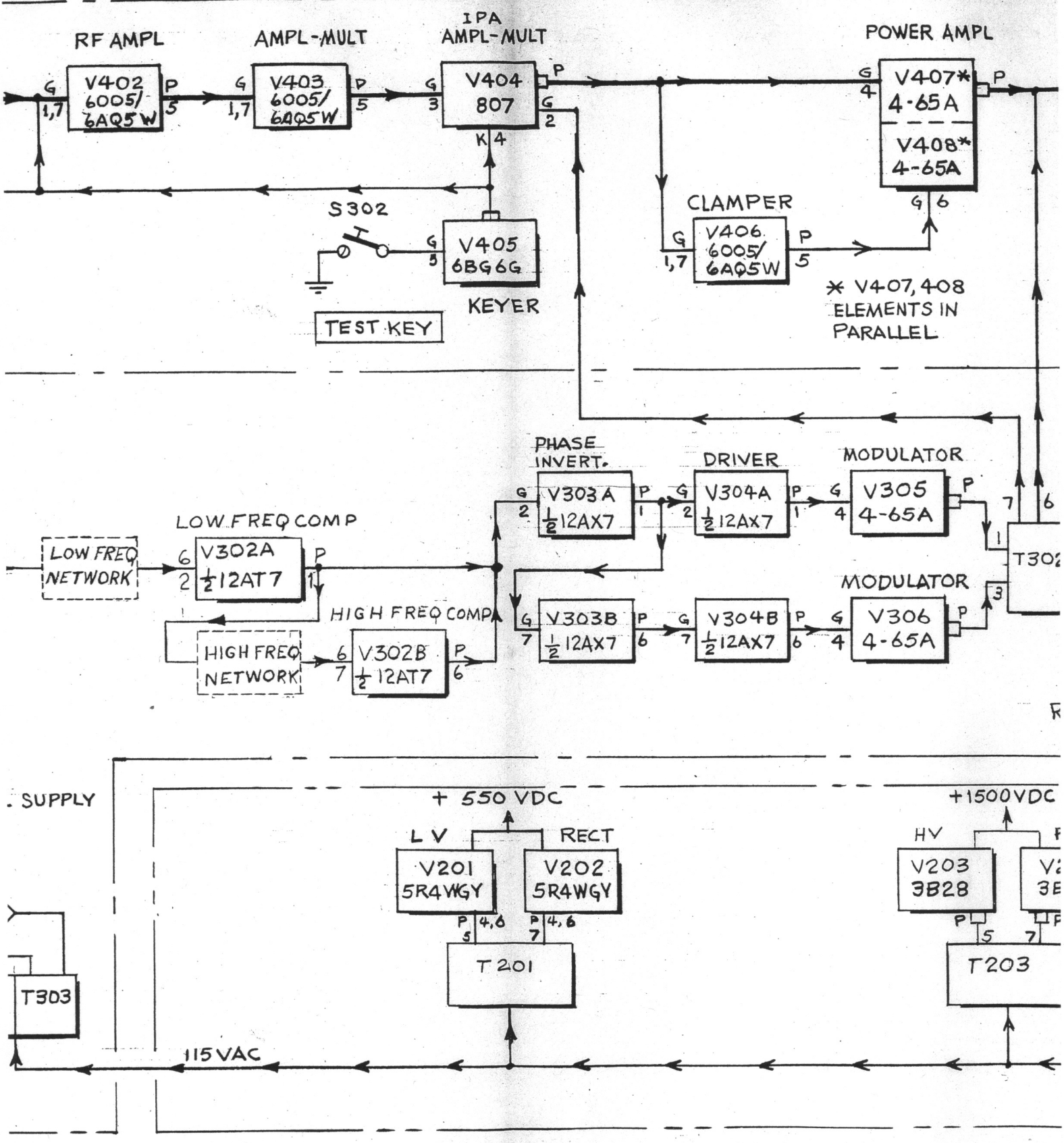

Figure 2-1. Radio Transmitting

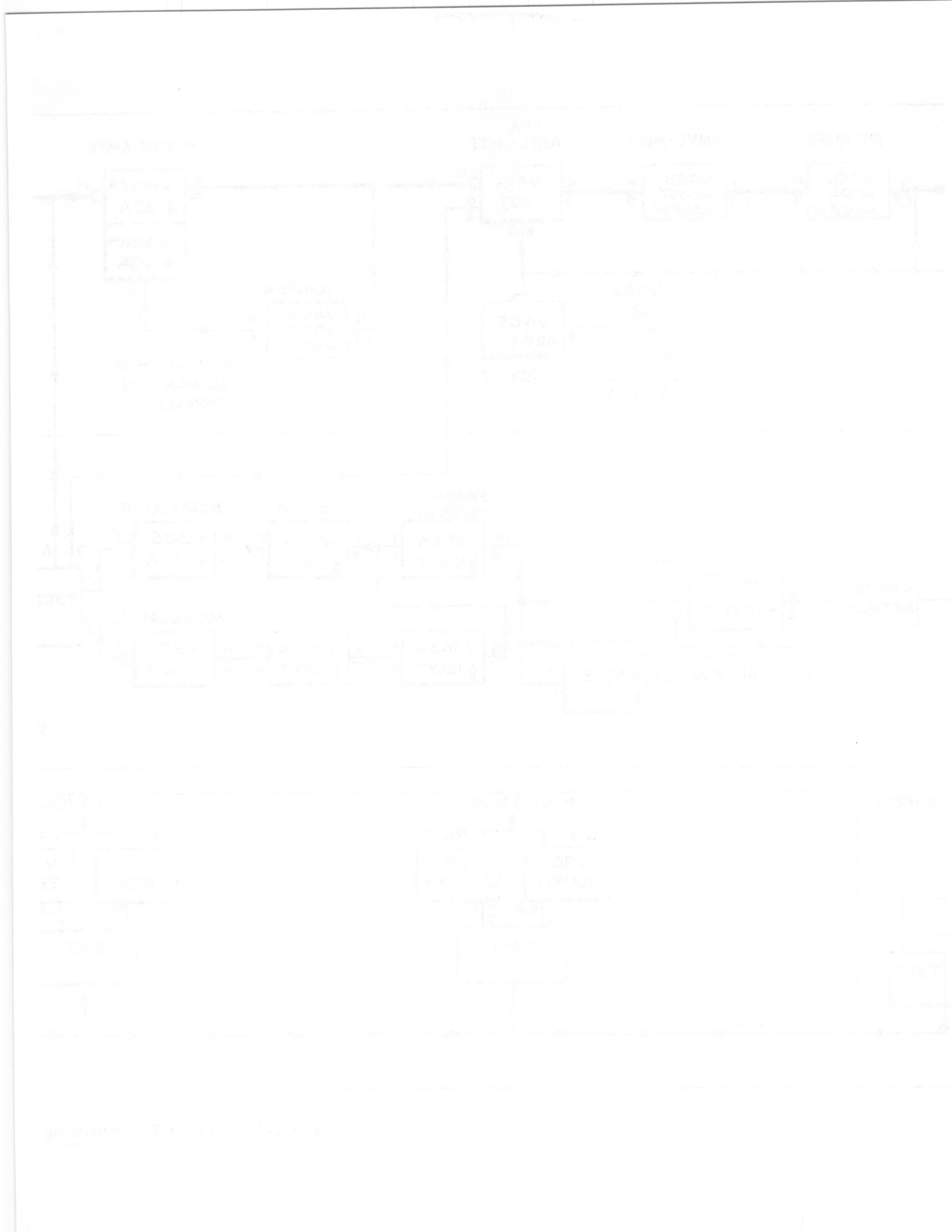

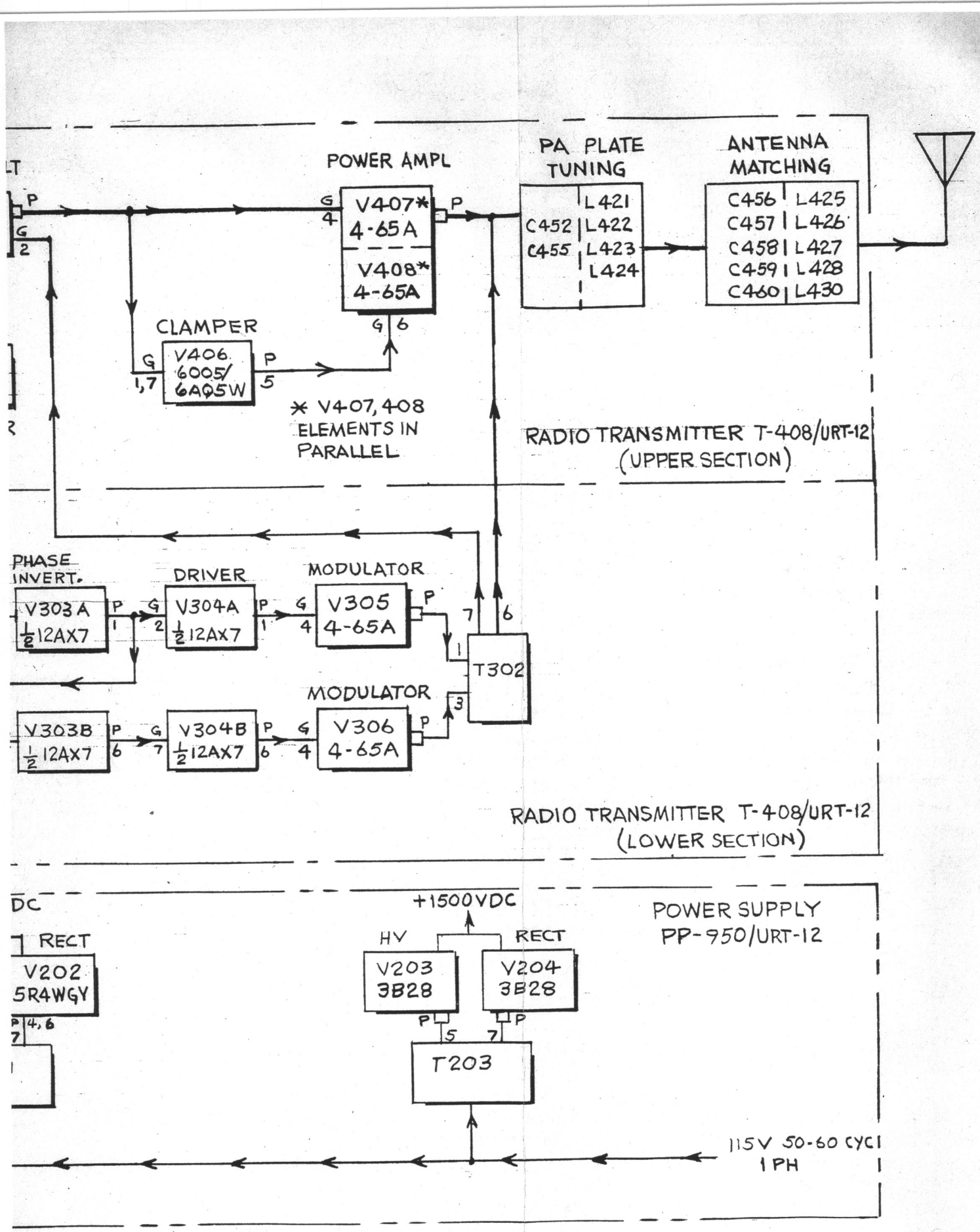

Figure 2-1. Radio Transmitting Set AN/URT-12, Block Diagram

connected between grid and cathode of V401. The quartz crystal may be at any frequency between 2,000 kc and 7,500 kc. To obtain output frequencies above 7,500 kc, it is necessary to double in the following amplifier-multipliers.

b. AMPLIFIER-MULTIPLIERS. - Output from oscillator-amplifier V401 is fed to the grid of rf amplifier V402, a type 6005/6AQ5W pentode, which operates as a conventional rf amplifier and buffer. The grid of this tube is keyed as explained in paragraph 4. Plate circuit of V402 is untuned and the rf signal is fed through coupling capacitor C419 to the grid of amplifier-multiplier V403. The carrier frequency band is selected by BAND SWITCH S402 (Refer to Table 2-1). When operating in bands 1, 2, 3 and 4 the input fundamental frequency is fed through coupling capacitor C419 to V403, a type 6005/6AQ5W, which operates as a conventional untuned rf amplifier,and then to IPA amplifier-multiplier V404, a type 807 beam pentode, whose plate circuit is tuned to the fundamental frequency of the input. IPA tuning capacitor C430 is arranged to tune with either plate coil L413 or L414 to any frequency in band 1, 2, 3 or 4 depending on the position of the BAND SWITCH. When operating in bands 5 and 6 the selected plate tank circuit of V403 is tuned to the second harmonic of the input frequency by capacitor C422, ganged with IPA tuning capacitor C430, which multiplies the fundamental frequency by two. This multiplied signal is then applied to V404 which has its plate circuit, consisting of L411 or L412 and C430, tuned to the same frequency. This method of operation is used for output frequencies between 7,500 kc and 15,000 kc. When operating in bands 7, 8, and 9 both tubes V403 and V404 perform multiplication functions, using the appropriate coils, as selected, and capacitors C422 and C430 to yield output frequencies between 15,000 kc and 30,000 kc.

c. POWER AMPLIFIERS. - The Power Amplifier, consisting of tubes V407 and V408, type 4-65A tetrodes operated in parallel,is a conventional plate tuned class C amplifier. The tunedrf signal, at the desired output frequency,is fed from the plate of V404 through coupling capacitor C434 to the control grids of the PA. A portion of this rf energy is applied to the grid of V406, which operates as a screen-grid clamper to V407 and V408. When rf energy is applied to the grid of V406,the grid goes more negative which decreases the plate current through resistors R447 and R449, thereby increasing the PA screen voltage, and prevents excessive current in the screen when rf energy is applied to the power amplifiers. The plate tank for the power amplifier is connected to the plates through dc blocking capacitor C451. The tank circuit is parallel tuned and rf energy is coupled into the antenna circuit through differential-type capacitor C456 connected at the ground end of the tank coil for bands 1 through 7 and through a link coil coupled to the small HF tank coil L423 for bands 8 and 9. The BAND SWITCH, S402-S404, selects appropriatetaps on plate tank coils L421 and L422 for bands 1 through 7 and on tank coil L423 for bands 8 and 9. Appropriate sections of PA tuning capacitors C452 and C455 are also selected by the BAND SWITCH. The simplified schematic, Figure 2-2, shows the connections for both LF and HF arrangements of the tank circuit. Plate voltage is supplied from the 1500 volt rectifier in the Power Supply unit. Plate voltage is fed through the

TABLE 2-1. TRANSMITTER HARMONIC MULTIPLICATION

OUTPUT FREQ. IN (Mc)	BANDS	CRYSTAL FREQ. IN (Mc)	V403 AMP-MULT		TUNED CIRCUIT FOR V403	V404 AMP-MULT		TUNED CIRCUIT FOR V404	
2-3	1	2-3	Fund	Untuned	L429	Fund	Tuned	L414	
3-4	2	3-4	Fund	Untuned	L429	Fund	Tuned	L414	
4-5.5	3	4-5.5	Fund	Untuned	L429	Fund	Tuned	L413	
5.5-7.5	4	5.5-7.5	Fund	Untuned	L429	Fund	Tuned	L413	
7.5-10	5	3.75-5	2nd Harmonic		L407 & C466	2nd Harmonic		L412	C423 C430
10-15	6	5-7.5	2nd Harmonic		L406 & C468 C422	2nd Harmonic		L411	
15-20	7	3.75-5	2nd Harmonic		L407 & C466	4th Harmonic		L410	
20-26	8	5-6.5	2nd Harmonic		L408 & C467	4th Harmonic		L410	
26-30	9	6.5-7.5	2nd Harmonic		L406 & C468	4th Harmonic		L410	

NOTE: Tuned circuits are used to obtain harmonics

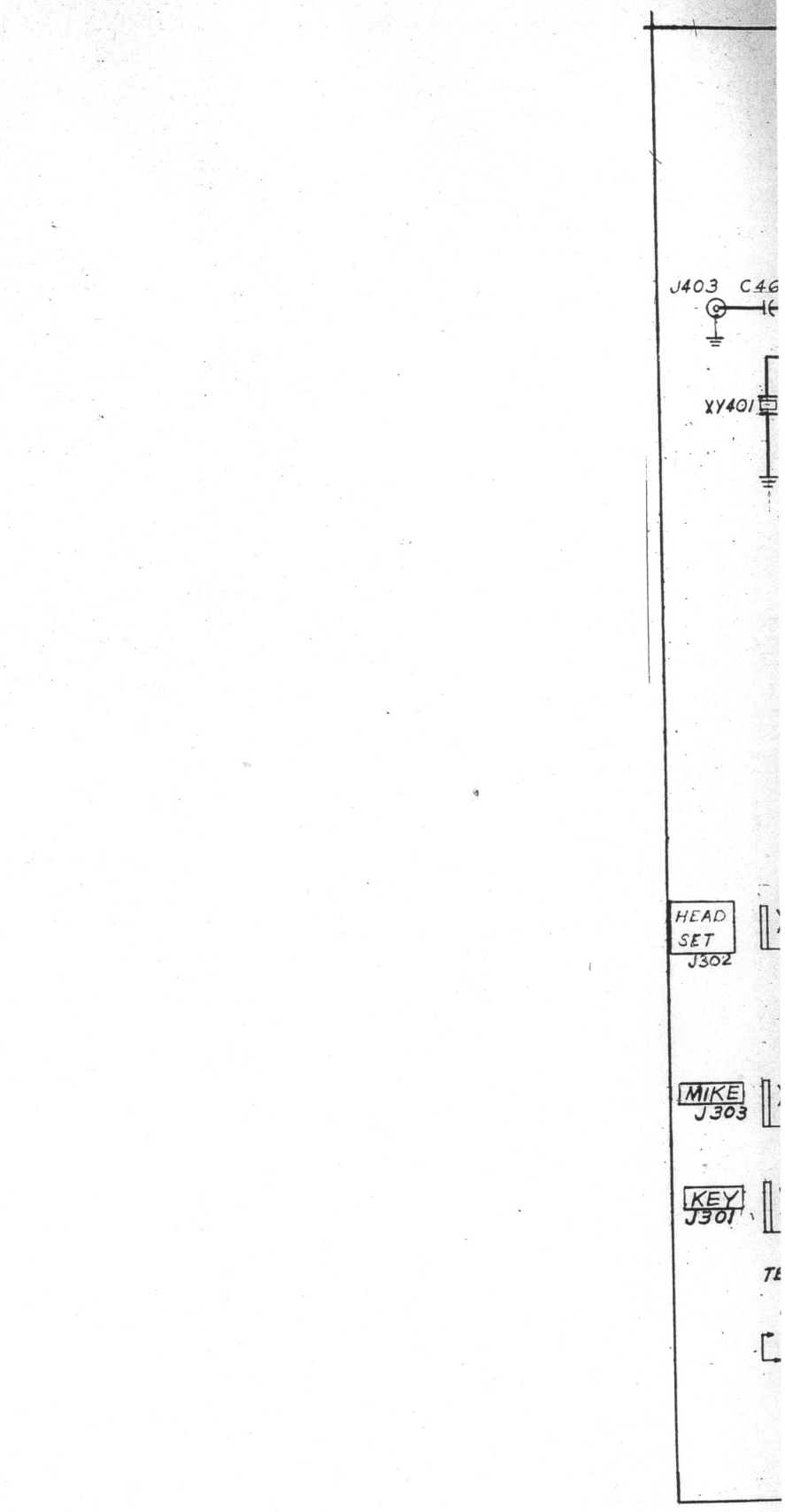
J403
C46
XY401
HEAD SET J302
MIKE J303
KEY J301

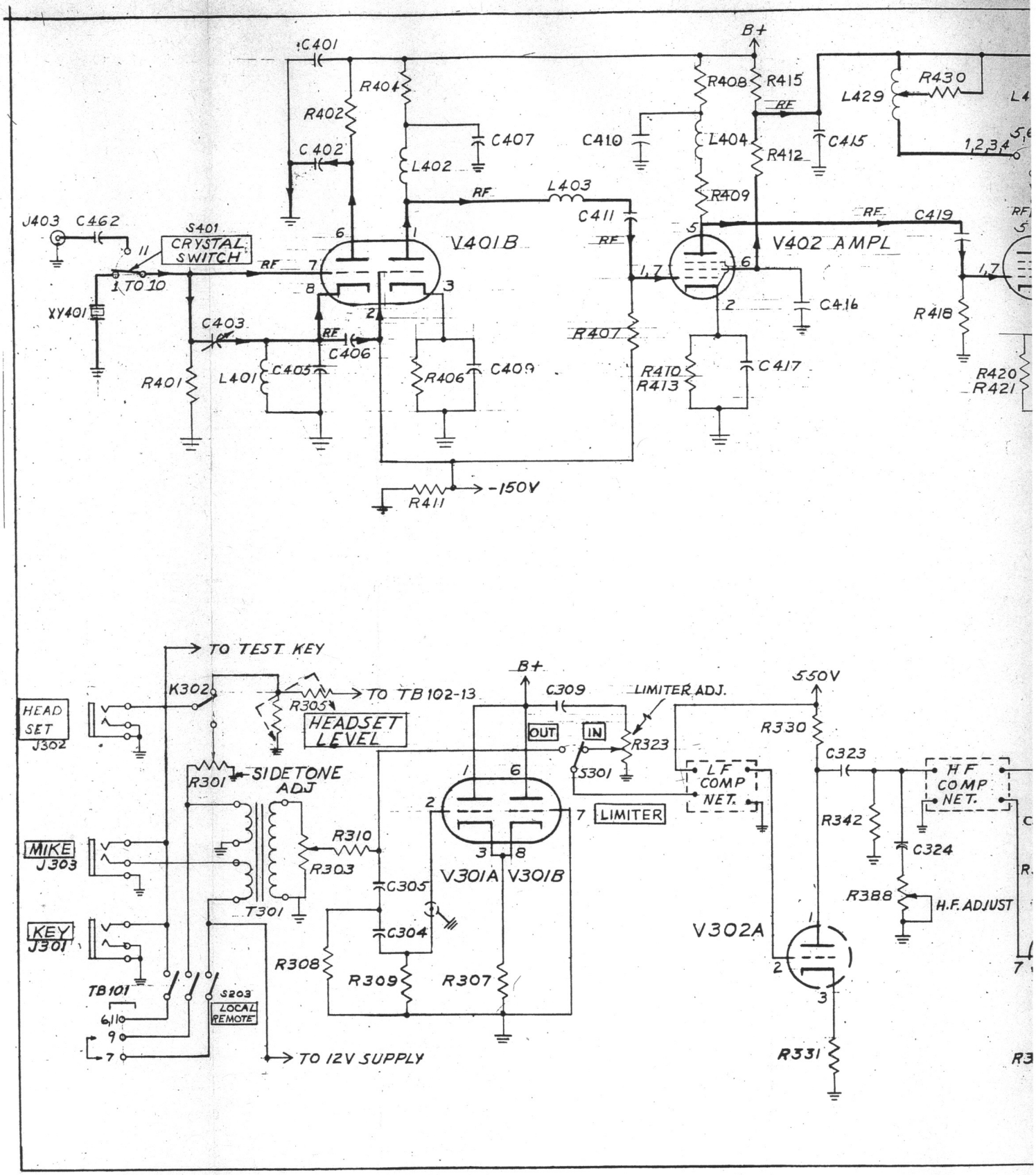

C401
R404
R402
C402
C407
L402
RF
L403
C411
B+
R408
R415
RF
L429
R430
C410
L404
R412
C415
R409
RF
C419
J403
C462
S401
CRYSTAL SWITCH
11
1 TO 10
XY401
V401B
V402 AMPL
C403
C406
C405
L401
R401
R406
C409
R407
R410
R413
C417
C416
R418
R420
R421
R411
-150V
TO TEST KEY
K302
TO TB102-13
R305
HEADSET LEVEL
HEAD SET
J302
R301
SIDETONE ADJ
MIKE
J303
KEY
J301
T301
R310
R303
C305
C304
R308
R309
R307
TB101
S203
LOCAL REMOTE
TO 12V SUPPLY
C309
LIMITER ADJ.
OUT
IN
R323
S301
LIMITER
V301A
V301B
550V
R330
C323
LF COMP NET.
HF COMP NET.
R342
C324
R388
H.F. ADJUST
V302A
R331

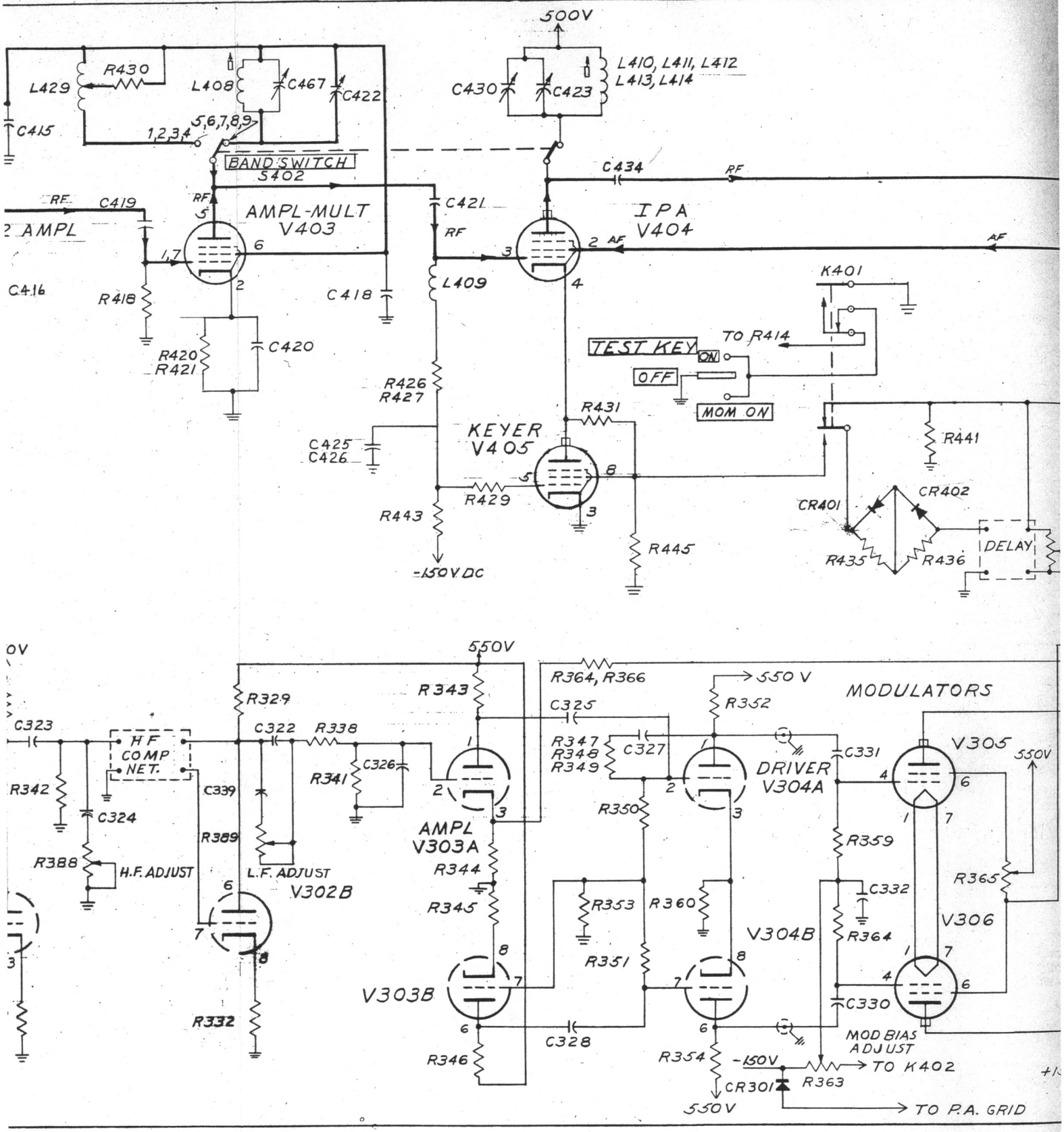
500V
L410, L411, L412
L413, L414
C430
C423
L429
R430
L408
C467
C422
C415
1,2,3,4
5,6,7,8,9
BAND SWITCH
S402
C434
RF
RF
C419
AMPL-MULT
V403
C421
IPA
V404
AF
AF
C416
R418
C418
L409
K401
TO R414
TEST KEY
ON
OFF
MOM ON
R420
R421
C420
R426
R427
R431
KEYER
V405
C425
C426
R441
R429
CR401
CR402
R443
R445
R435
R436
DELAY
-150V DC
550V
R364, R366
550 V
MODULATORS
R329
R343
C325
R352
C323
HF
COMP
NET.
C322
R338
R347
R348
R349
C327
C331
V305
550V
R342
C339
R341
C326
DRIVER
V304A
C324
R350
R389
AMPL
V303A
R359
R388
H.F. ADJUST
L.F. ADJUST
R344
R365
V302B
R353
R360
C332
R345
V304B
R364
V306
R351
V303B
C330
R332
C328
MOD BIAS
ADJUST
R346
R354
-150V
TO K402
CR301
R363
550V
TO P.A. GRID

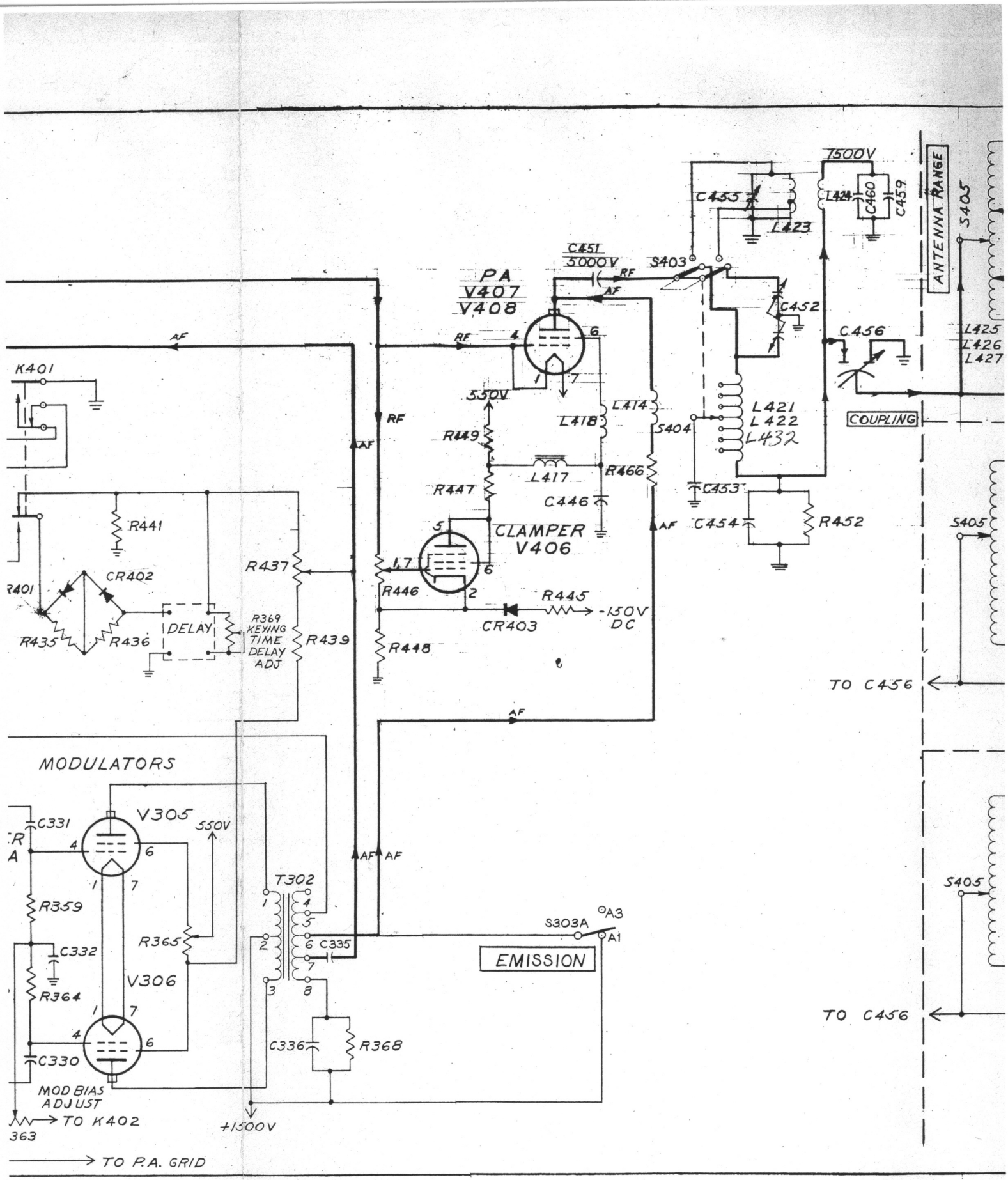
7500V
C455
L424
C460
C459
L423
ANTENNA RANGE
S405
C451
5000V
RF
AF
S403
PA
V407
V408
C452
C456
L425
L426
L427
K401
AF
RF
4
6
1
7
550V
L414
L418
S404
L421
L422
L432
COUPLING
R449
L417
R466
R447
C446
C453
C454
R452
CLAMPER
V406
5
1,7
6
2
R441
R437
CR402
R401
R435
R436
DELAY
R369
KEYING
TIME
DELAY
ADJ
R439
R446
R445
-150V
DC
CR403
R448
TO C456
MODULATORS
V305
C331
550V
R359
R365
C332
V306
R364
C330
MOD BIAS
ADJUST
TO K402
363
T302
C335
S303A
A3
A1
EMISSION
C336
R368
+1500V
TO P.A. GRID

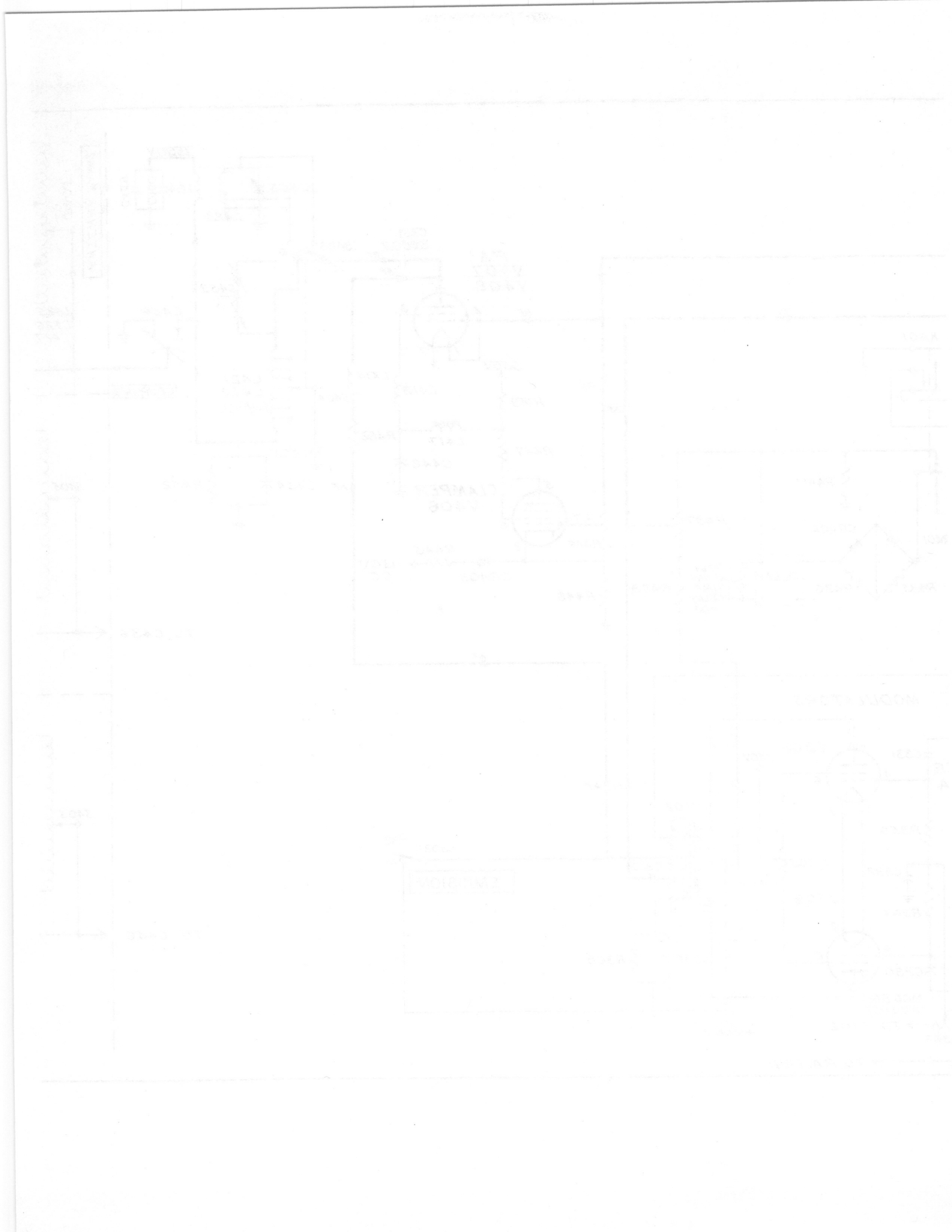

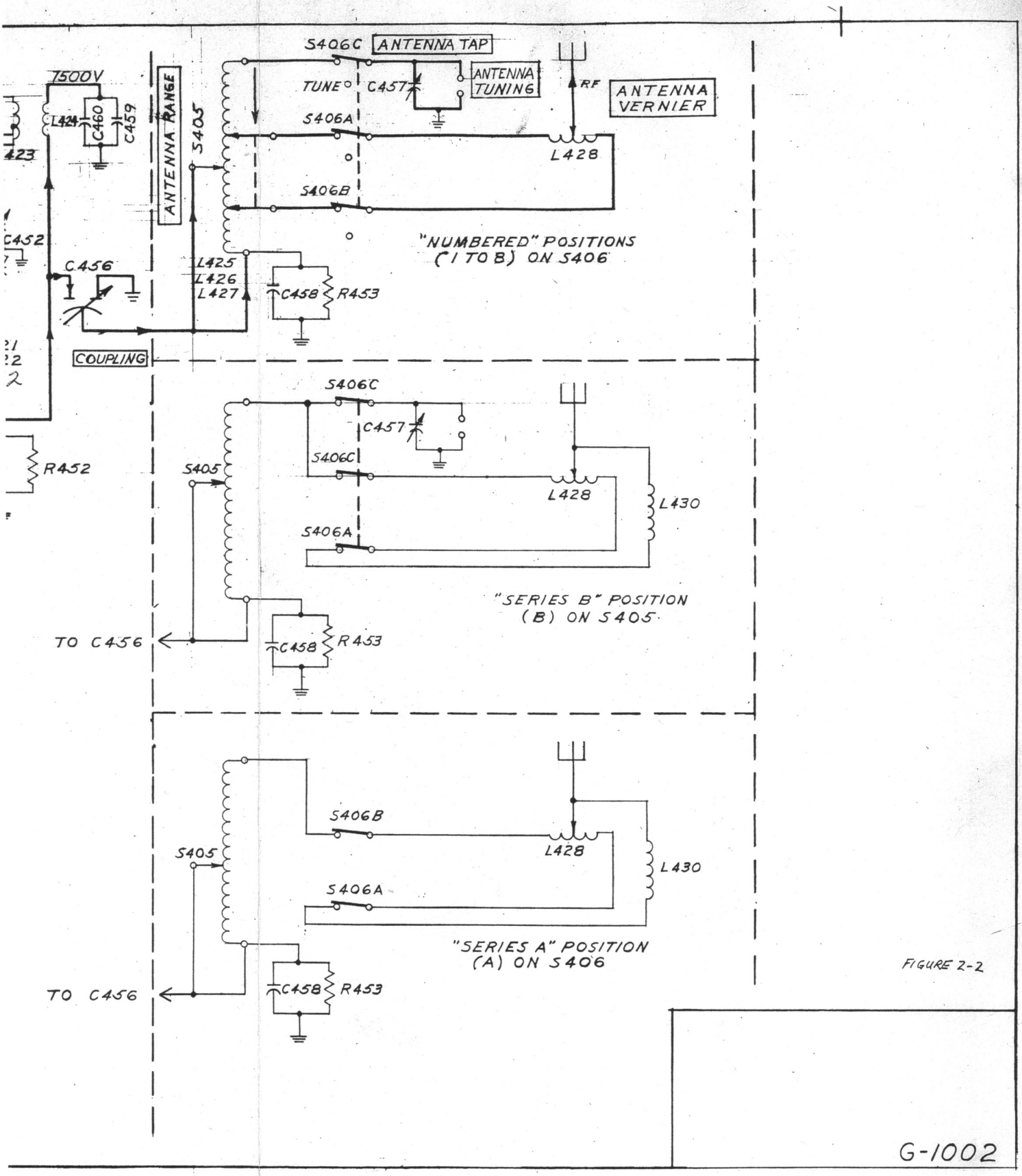

Figure 2-2. Simplified Radio and Audio Frequency Circuits

EMISSION switch S303A and plate decoupling resistor R466. Depending on the position of BAND SWITCH S402 and the operating frequency, plate power is then fed through a combination of plate chokes L419, L420 and/or L431. On A-3 emission, a small amount of audio voltage is fed back to the screen grid of IPA stage V404 to aid the PA in providing high percentage modulation when the power amplifier is plate modulated.

d. ANTENNA MATCHING NETWORK. - The antenna matching network consists of the following elements: COUPLING capacitor C456, ANTENNA TAP selector S406, ANTENNA RANGE selector S405, ANTENNA TUNING capacitor C457 and ANTENNA VERNIER coil L428. These controls are all marked on the front panel of the Radio Transmitter. COUPLING control C456 is a differential-type capacitor, which adjusts the amount of rf energy that is coupled between the Power Amplifier and the antenna, while maintaining a constant capacitance in the tuned tank circuit. ANTENNA RANGE switch S405 acts as a coarse coupling control by selecting the necessary coil taps on L425, L426 and/or L427. It is used in matching the output of the PA to the antenna. The amount of rf energy selected depends upon the output frequency and the characteristics of the antenna. The ANTENNA TAP switch together with the ANTENNA TUNING capacitor acts as a fine matching control, once the approximate match has been established with the ANTENNA RANGE switch.

(1) High Capacitive Antenna. - When loading the output of the transmitter into a highly capacitive antenna, the ANTENNA TUNING capacitor C457 is switched out of the circuit by the SERIES A position of the ANTENNA TAP switch. The ANTENNA RANGE switch is used to select different portions of the antenna loading coils L425, L426, and L427 while tuning with the ANTENNA VERNIER to match and load the rf output into the antenna. Rf coil L430, as indicated in Figure 2-2, is placed in parallel with the unused portion of L428 to limit high circulating currents which could cause damage to the ANTENNA VERNIER coil.

(2) High Inductive Antenna. - When loading the output into a highly inductive antenna, the ANTENNA TAP selects the SERIES B position which places the ANTENNA TUNING capacitor C457 in parallel with the antenna loading coils, L425, L426 and L427. In this case, the ANTENNA VERNIER is used in series with the antenna, the amount of coil used is dependent upon the inductive nature of the antenna. Once the approximate match has been established with the ANTENNA RANGE switch, the ANTENNA TUNING capacitor and the ANTENNA VERNIER coil are used to match and load the transmitter output to the antenna.

(3) Normal Antenna. - The numbered positions of the ANTENNA TAP switch are used when matching an antenna which is neither highly capacitive nor highly inductive. Different portions of the antenna load coil are selected with the ANTENNA TAP switch, depending on the output operating frequency. ANTENNA TUNING capacitor C457 is used together with L428, the ANTENNA VERNIER, for loading and matching the output to the antenna system used, for all frequencies from 2 mc to 30 mc. When a tuned condition is reached, with any of the above mentioned antennas, the COUPLING control or the ANTENNA VERNIER is used to render the final fine adjustment necessary for maximum output efficiency.

3. AUDIO CIRCUITS

The audio circuits for voice modulation are shown in simplified form in Figure 2-2 and in complete form on drawing J-132. With the LOCAL-REMOTE switch S202 in the LOCAL position the input microphone is connected to MIKE jack J303, which feeds audio energy to microphone transformer T301. A portion of this signal is tapped off the primary and applied to HEADSET jack J302 through a side-tone adjust resistor R301, to provide voice monitoring at the transmitter. The front panel MOD. GAIN control R303 adjusts the level of audio modulation. The audio signal is taken from R303 and fed to the LIMITER switch S301. When S301 is in the IN position, the audio signal is applied to the grid of the limiter tube V301, which cuts off the peaks of high level audio to prevent over-modulation and allows a high average modulation level. With the LIMITER switch in the OUT position V301 is bypassed. The amount of compression obtained depends on the setting of the limiter adjust control R323. At approximately 70% modulation, a 10 db increase in input will result in less than 3 db change in modulation level. The limiter signal or the bypassed signal is then fed first to a low frequency compensating network which includes one-half of V302, a type 12AT7 dual triode and its associated network. Here the complete audio signal is amplified and applied to the HF compensating network. The composite signal is further amplified in V302B. By this means the frequencies below 200 cps and above 2500 cps are sharply cut off while the frequencies between 200 and 2500 cps produce an output response which is flat within ±3 db from the 1000 cps value. Potentiometer R388 is used to adjust the high frequency roll-off which is connected between the plate of V302A and the grid input of H. F. compensator V302B. The low frequency adjustments are made with potentiometer R389 which is connected between the plate circuit of V302B and the grid input of the phase inverter amplifier V303A. To balance the audio compensated signal to V303, first adjust R389, the low frequency potentiometer, for the proper input level. Then adjust R388 to yield the correct balance level. This balanced signal is now applied to the grid of V303A. A portion of the output is fed back to V303B and is phase inverted before it is passed on to V304, a conventional class A amplifier operated push-pull. The signal is then amplified to drive modulator tubes V305 and V306, type 4-65A tetrodes. The modulators, both operating at class AB1, are connected in push-pull. The circuit is conventional with the grid supplied by the balanced output of V304 and +1500 v dc plate voltage is supplied from the high voltage rectifier through the primary of modulation transformer T302. Screen voltage for the modulators is obtained from the 550 volt rectifier through the modulator screen balancing potentiometer R365, to feed an equal amount of voltage to each of the modulator screens, thereby assuring perfect symmetry and balanced output. The audio output is now fed from the modulator transformer T302, tap number 7 to the screen grid of the IPA and from tap number 6 to the plate of the PA. In this manner, the PA grid is modulated to aid the effectiveness of plate modulation employed in this transmitter.

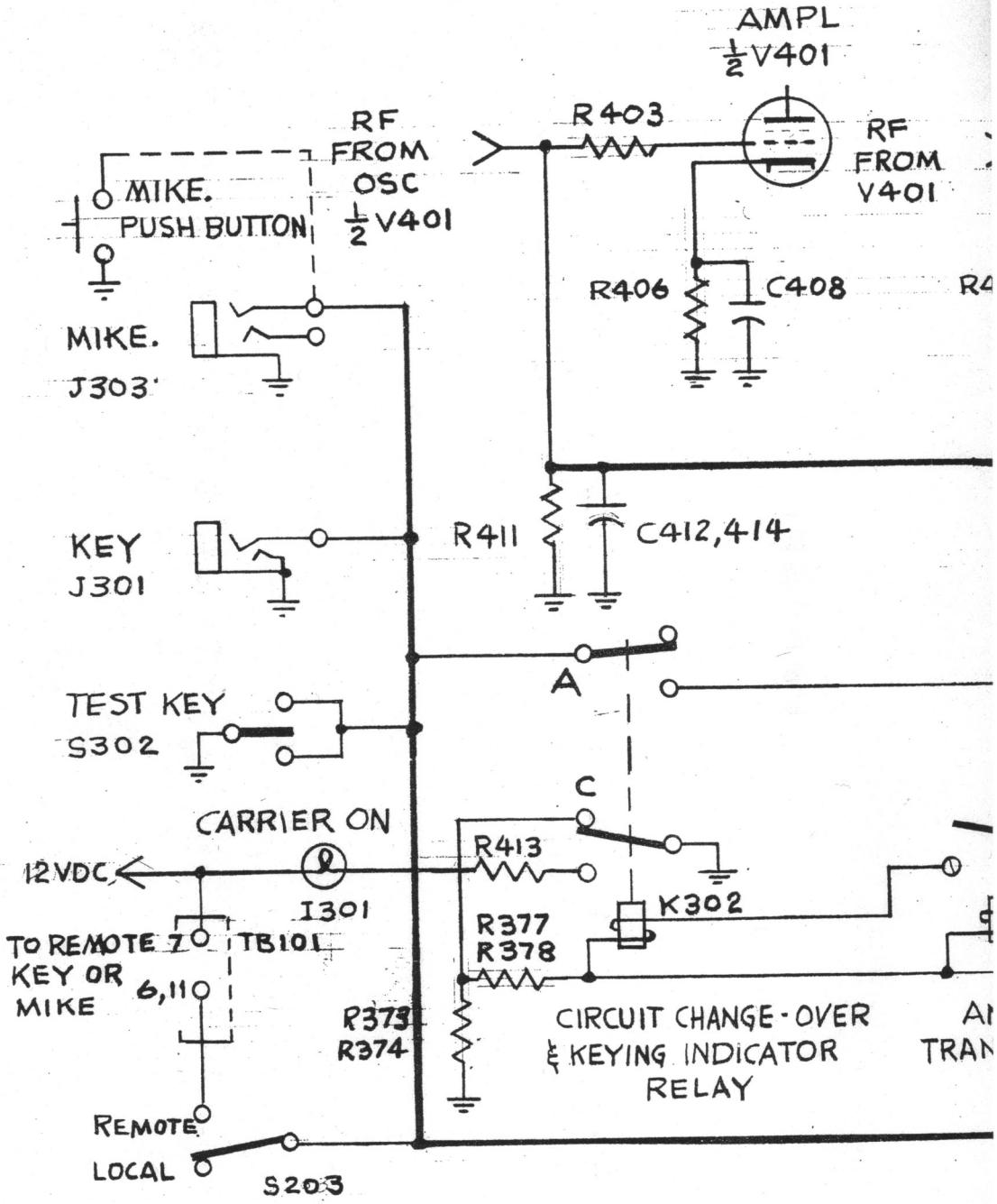
AMPL
½V401
R403
RF
FROM
V401
RF
FROM
OSC
½V401
MIKE.
PUSH BUTTON
MIKE.
J303
R406
C408
KEY
J301
R411
C412,414
A
TEST KEY
S302
C
CARRIER ON
12VDC
I301
R413
K302
R377
R378
TO REMOTE
KEY OR
MIKE
6,11
TB101
R373
R374
CIRCUIT CHANGE-OVER
& KEYING INDICATOR
RELAY
REMOTE
LOCAL
S203

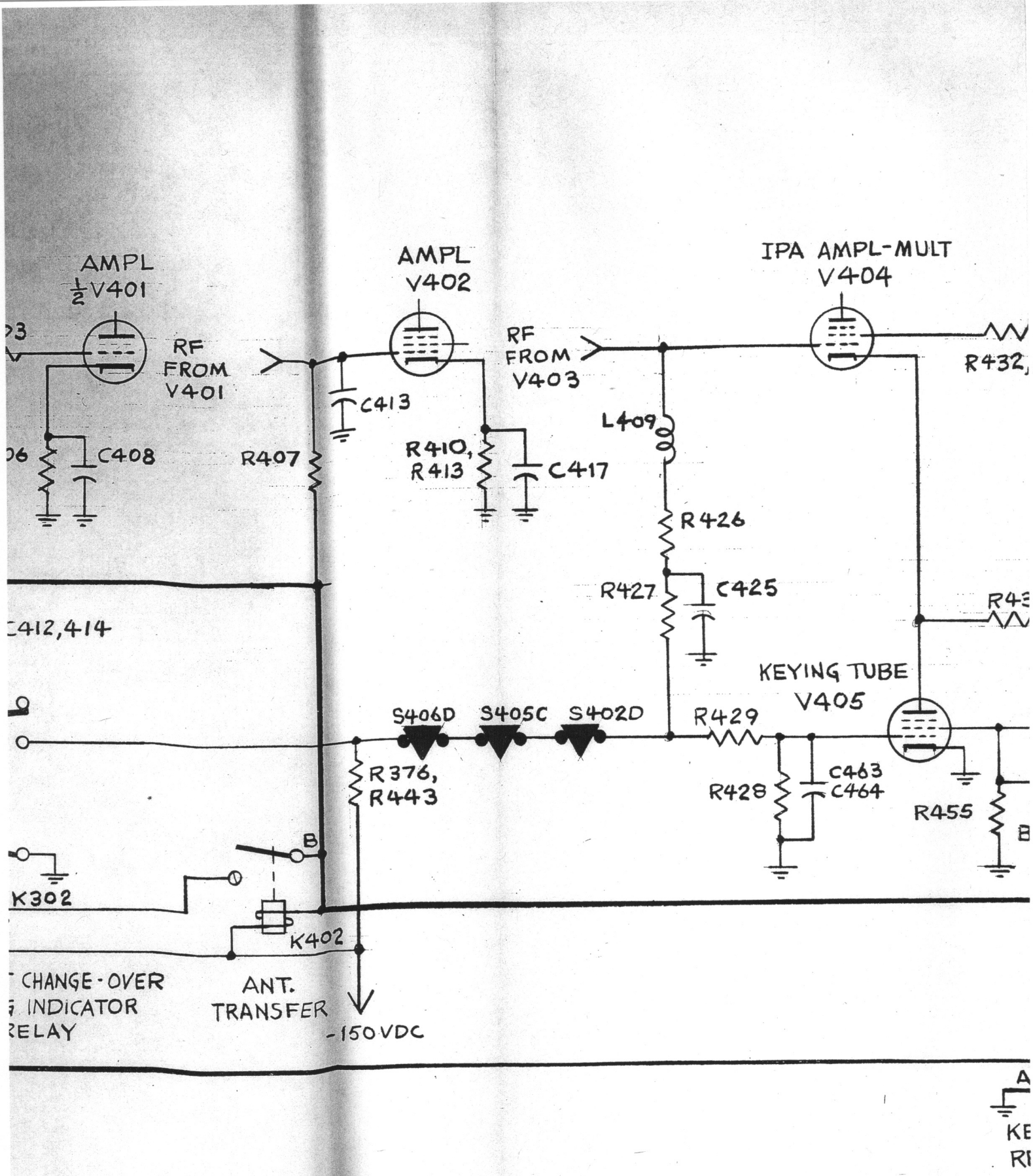
AMPL
½V401
RF
FROM
V401
C408
R407
C413
AMPL
V402
R410,
R413
C417
RF
FROM
V403
L409
IPA AMPL-MULT
V404
R426
R427
C425
C412,414
KEYING TUBE
V405
S406D
S405C
S402D
R429
R376,
R443
R428
C463
C464
R455
B
K302
K402
CHANGE-OVER
INDICATOR
RELAY
ANT.
TRANSFER
-150VDC

Figure 2-3

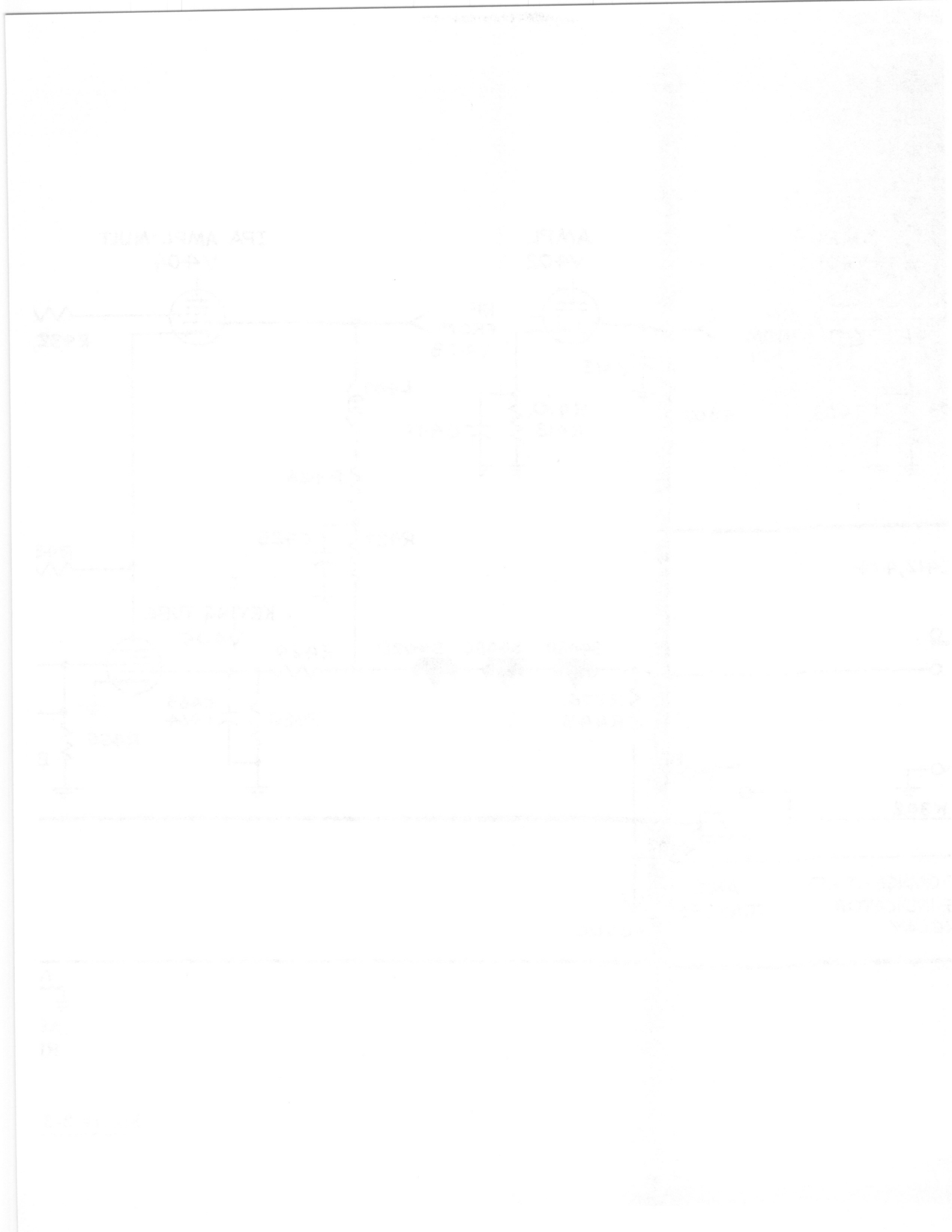

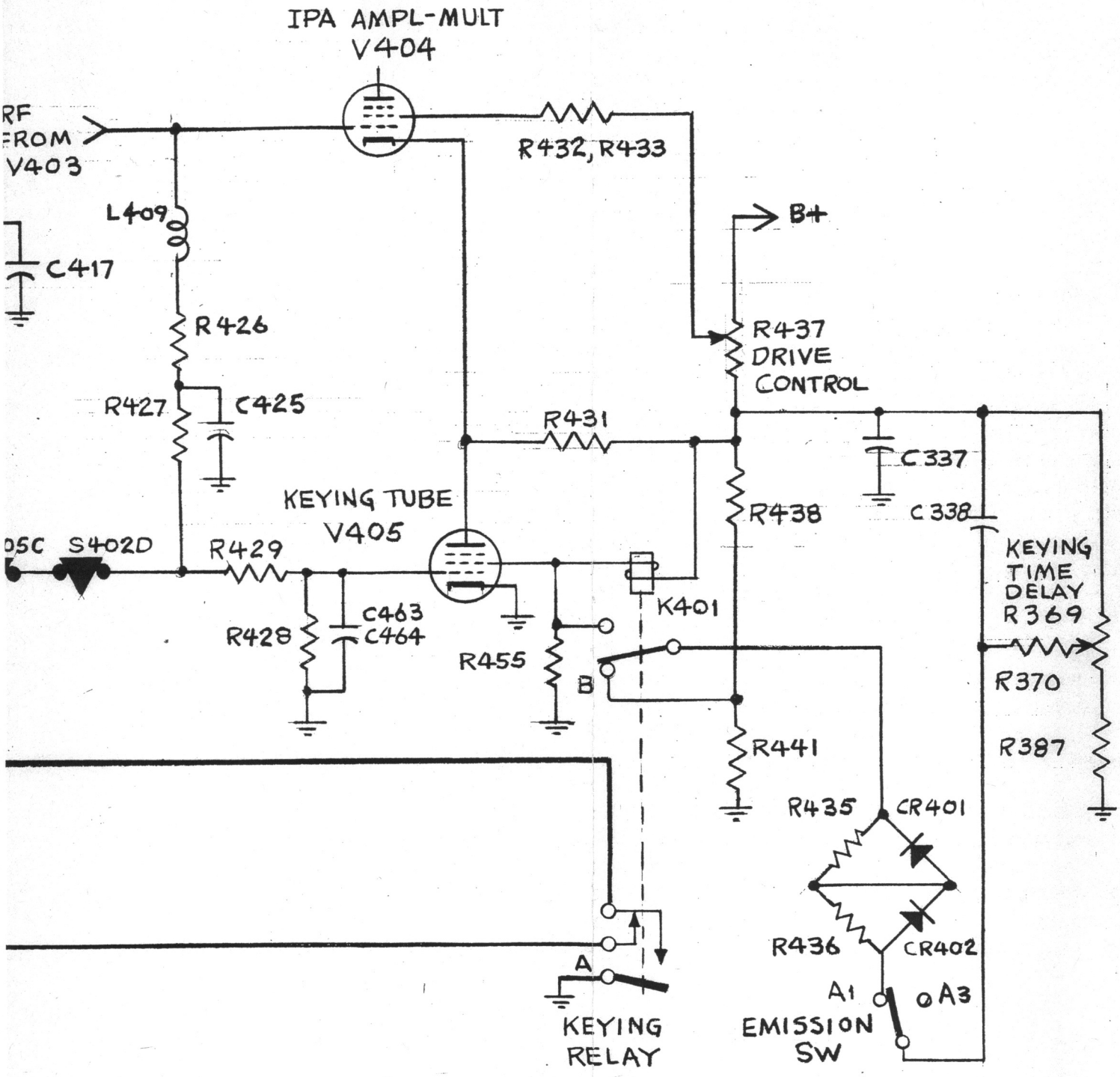

Figure 2-3. Keying Circuit



4. KEYING CIRCUITS.

The electronic keying circuit includes a keying tube V405, a type 6BG6G pentode, and a series of three relays: keying relay K401, circuit change-over and keying indicator relay K302 and antenna transfer relay K402. Keying is ordinarily performed by removing cut-off bias from the grids of IPA amplifier-multiplier V404, amplifier V402 and the amplifier section of oscillator-amplifier V401. In the case of high speed keying, a delay circuit maintains V401 and V402 in the conducting condition during the short "key-off" time and only the IPA amplifier-multiplier V404 is keyed.

a. Referring to Figure 2-3: for CW operation (A-1) either a telegraph key inserted into KEY jack J301 or TEST KEY S302 is closed, placing a ground, through the "A" contact of keying relay K401, on the coil of antenna transfer relay K402 which is thus energized from the -150 v dc bias connection. This relay, when closed, places the key ground on the coil of circuit change-over and keying indicator relay K302, thus energizing that relay from the -150 v dc connection. When K302 closes, the CARRIER ON light I301 is energized and the key ground, through contact "A" of K302 and band switch interlocks S406D, S405C and S402D, is placed on the grid circuits of keying tube V405 and IPA amplifier-multiplier V404. This grounding of the grids reduces their bias voltage below cut-off and allows them to draw plate current. Plate voltage for V405 is furnished from the LV power supply through a network of resistors including Drive Control potentiometer R437, which adjusts the IPA screen voltage. In the "key-up" condition, the coil of keying relay K401, which is in the screen circuit of V405, is supplied voltage just insufficient to close it. When keyed, V405 draws plate current and its screen current rises sufficiently to close K401. When plate current flows, the internal resistance between plate and cathode of V405 becomes low, effectively grounding the cathode of the IPA tube V404: thus allowing V404 to amplify the rf signal.

b. Closing the key circuit also places a ground, through contact "A" of keying relay K401 in the open position, on the grid circuits of the amplifier section of oscillator-amplifier V401 and amplifier V402, thus raising the grid voltage of these two tubes above cut-off. V401 and V402 are now in a conducting condition and will amplify the rf signal. When the keying relay closes, as explained in paragraph a., the ground on these tube grids is through the arm of contact "A", make-before-break type, and no longer depends on the position of the key as long as K401 remains closed.

c. When the key circuit is opened, the ground on the grids of keying tube V405 and IPA amplifier-multiplier V404 through the "A" contact of K302 is removed. This places the grids of these tubes at a voltage well beyond cut-off, V405 becomes non-conducting raising V404 cathode voltage and thus effectively keying V404 off. When the keying tube is cut off, the voltage across keying relay K401 tends to drop, which would deenergize that relay, which would, in turn, remove ground to deenergize relays K402 and K302 and also cut off tubes V401 and V402. However, a time delay circuit in connection with keying relay

K401 is used to hold this relay, and consequently K402 and K302 also, closed after normal energy is removed from the relay coil. This means that the first closing of the key removes cut-off bias from V401, V402 and V404 in the rf portion of the transmitter but after the key is closed once, only the IPA tube V404 is keyed when the delay circuit is used.

d. The time delay circuit which holds K401 closed is, of course, used only for A-1 emission. The circuit is of the capacitor charge-discharge type. With K401 energized, capacitors C337 and C338 are charged up to a potential the same as that of the plate end of the K401 coil. When the key is lifted the voltage across K401 coil decreases and the capacitors partially discharge through the EMISSION switch S303B, the polarized discharge network (resistors R435 and R436 with diode rectifiers CR401 and CR402), and the K401 contact "B" and coil. Keying Time Delay control R369, connected in a resistor network across the discharge circuit of C338, is used to adjust the amount of time delay over a wide range. For "break-in" keying, the time delay is adjusted to just bridge the space between code characters. For high-speed or teletypewriter operation the time delay should be adjusted to bridge the blank keying pulses.

e. When using voice transmission (A-3) the keying "on" of the carrier is done by the microphone switch (push-to-talk) through MIKE jack J303. EMISSION switch S303B in the (A-3) position disconnects the time delay circuit from keying relay K401.

f. For remote operation, the remote microphone or telegraph key, through the LOCAL-REMOTE switch S203 in the REMOTE position, grounds the key line in the same manner as the local key.

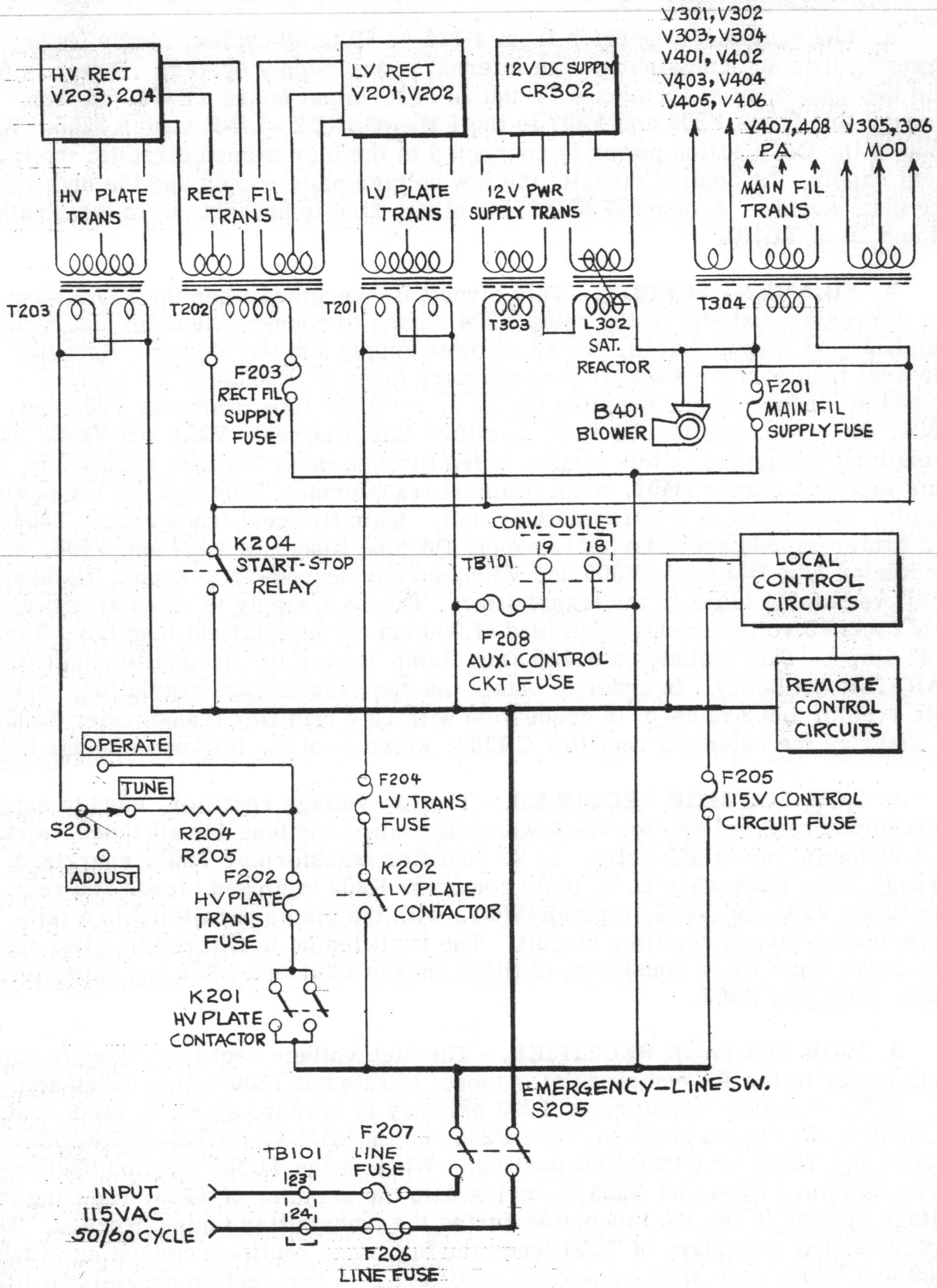

Figure 2-4. Power Distribution Circuit

5. POWER SUPPLY CIRCUITS
(Refer to Figure 2-4)

a. The equipment operates from a 115 v, 50 to 60 cycles, single phase, ac power source and contains its own internal power supply system. Power is fed into the equipment at terminals 23 and 24 of terminal board TB102 and then through line fuses F206 and F207 to the EMERGENCY-LINE switch S205. With S205 in the ON position, power is connected to the four branch circuits; the filament supply, the control circuit, the low voltage plate supply and the high voltage plate supply. A fused (F208) 115 v utility line is brought out to terminals 18 and 19 of TB102.

b. FILAMENT SUPPLY. - This circuit is energized when the START button is pressed and start-stop relay K204 closes to connect the main and rectifier filament transformers, the 12 v power supply and the blower. Rectifier filament transformer T202, with its primary fused by F203, has two center-tapped secondaries; one supplies the H.V. rectifier tube filaments V203 and V204, the other supplies the L.V. rectifier tube filaments V201 and V202. The remaining equipment in this circuit is fed through main filament supply fuse F201. This includes blower B401, main filament transformer T304 and the 12v power supply, all located in the transmitter unit. Main filament transformer T304 has two center-tapped secondaries to supply PA tube filaments V407 and V408, and modulator tube filaments V305 and V306, and one secondary to supply filaments of all remaining tubes in the transmitter. The 12 v supply is rated at between 9-1/2 and 15 volts at continuous load of 900 ma or intermittent load from 0 to 1.45 amps. This includes a 0.250 amp. lamp load in the transmitter unit (the CARRIER ON lamp). In order to obtain the required voltage regulation, saturable reactor L302 is used in connection with 12 v rectifier transformer T303 to energize the selenium rectifier CR302, which is of the full-wave bridge type.

c. LOW VOLTAGE RECTIFIER. - The low voltage rectifier, used to supply plate and screen voltage for the lower-stage tubes and bias for all tubes, is rated at 0.250 amperes at 550 volts. L.V. rectifier transformer T201, energized through fuse F204 when L.V. plate contactor K202 is closed, feeds two rectifier tubes V201 and V202, type 5R4WGY, with the plates paralleled in a full-wave center-tapped rectifier circuit. The rectified dc is filtered in a two section choke input filter consisting of filter chokes L201 and L202 and capacitors C201, C202 and C203.

d. HIGH VOLTAGE RECTIFIER. - The high voltage rectifier, used to supply plate power to the PA and modulator tubes, is rated at 1500 volts, 0.250 amperes, dc. H.V. rectifier transformer T203 primary is fed through H.V. plate contactor K201 in the closed position, fuse F202 and the ADJUST-TUNE-OPERATE switch S201 in the TUNE or OPERATE position. When in the TUNE position S201 inserts resistors R204 and R205 in series with the primary of T203, reducing the voltage applied to the PA tubeplates during the transmitter tuning process. The center-tapped secondary of T203 feeds the full-wave rectifier consisting of tubes V203 and V204, type 3B28 half-wave rectifiers. A two section choke-input filter

consisting of filter chokes L203 and L204 and capacitors C205 and C206 is used. Bleeder resistors R206, R207 and R208 in seriesacross the dc output provide protection against charged filter capacitors and improve the regulation of the rectifier.

6. CONTROL CIRCUITS

The control circuits include those for application of power, protection of personnel and equipment, and provision for remote operation,as shown in simplified form in Figure 2-5 and complete in Drawing J-132.

a. POWER CONTROL. - Referring to Figure 2-5, the application of all power to the transmitter is by the EMERGENCY-LINE switch S205 which connects the 115 v ac line to START-STOP switch S207 and Start-Stop relay K204. Application of plate power places the start-stop circuit in readiness. Pressing START button S207 momentarily energized the Start-Stop relay K204 which operates, and then stays energized over one of its closed contacts. Pressing the STOP button S207 momentarily, shorts the relay K204, dropping it open where it remains until the START button is again pressed. When relay K204 closes, 115 volts power is brought to the PLATE switch S206, after time delay relay K203 has been energized, its motor starts and, at the end of the delay time, 30 seconds or more, the relay closes its contacts. Placing the PLATE switch in the ON position will complete the ac voltage path to the high and low voltage plate contactor, providing that bias failure relay K301, Plate overload relay K304, Modulator overload relay K303, and all interlock switches are closed. The conditions and operation of this protective circuit are discussed in paragraph b. below. With high voltage plate contactor K201 closed, the H. V. rectifier is energized when the ADJUST-TUNE-OPERATE switch S201 is in either the TUNE or OPERATE position.

b. PROTECTION. - The equipment is provided with protective devices and circuits to prevent damage to equipment or injury to personnel due to shorts, overload or coming in contact with dangerous high voltage. The circuits are shown in Figures 2-5 and 7-___, and are listed below:

(1) Fusing. - Primaries of transformers are fused to protect against shorts or overload. The control circuit supply is also fused.

(2) Time Delay. - Time delay relay K203 prevents application of plate power until the tube filaments have had time to warm up. The delay time is adjustable up to 60 seconds but should not be less than 30 seconds.

(3) Bias Failure. - Bias failure relay K301, energized by the bias supply, prevents application of power when bias is not present at the tube grids and removes plate power if the bias supply should fail.

(4) Plate Overload. - Plate overload relay K304 removes plate power if the PA or modulator tubes are overloaded. The operating coil of K304 is in the ground lead of the high voltage rectifier and is shunted by resistor R384 and potentiometer R385 allowing adjustments of the relay operating point.

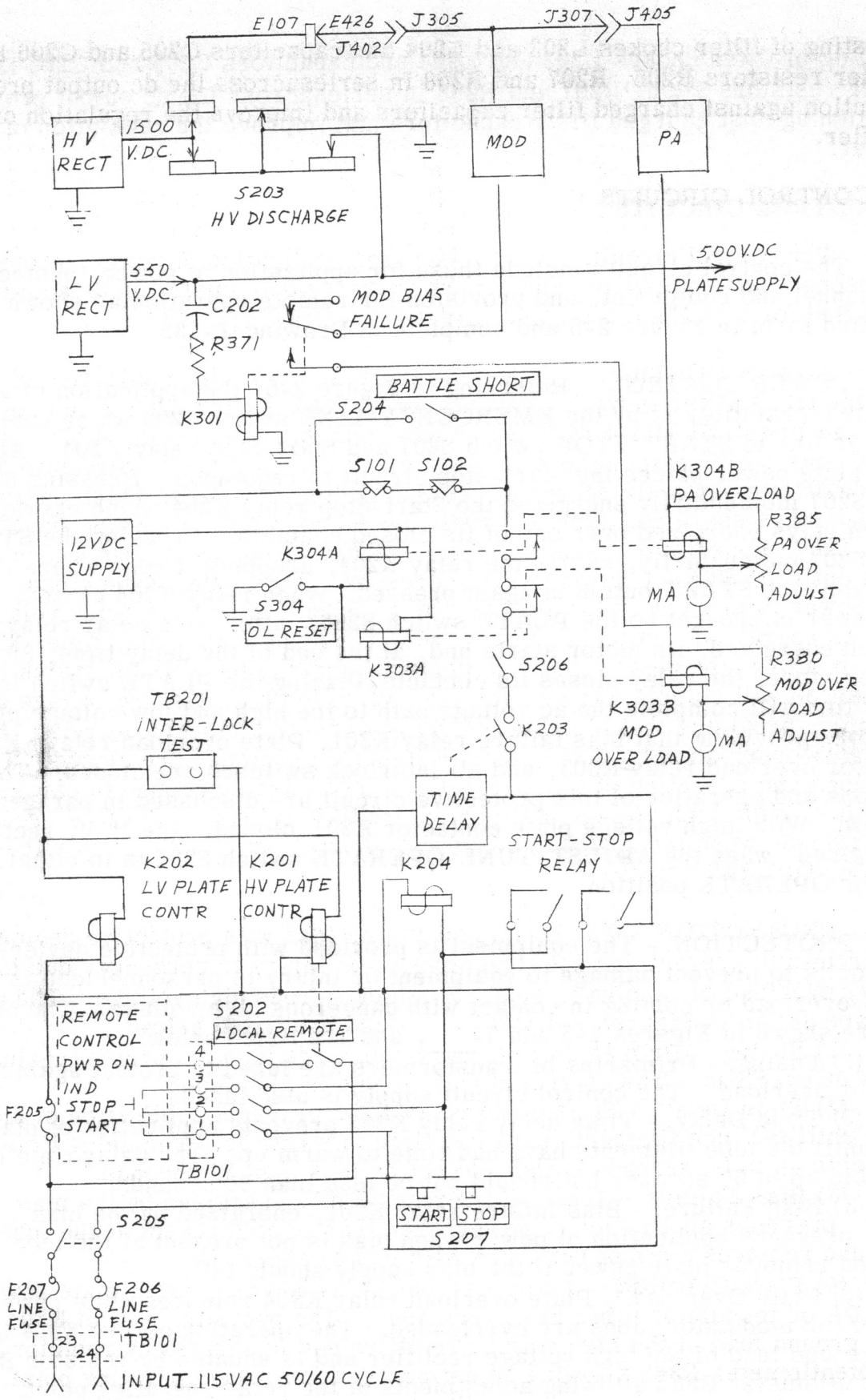

Figure 2-5. Control and Protection circuits

(5) Modulator Overload. - Modulator overload relay K303 operates in the same manner as the above mentioned plate overload relay. The operating coil of K303 is in the ground lead of the high voltage rectifier and is shunted by resistors R381, R382 and potentiometer R380 allowing adjustments of the relay operating point. An O.L. RESET switch S204, is located on the front panel of the Radio Transmitter T-408/URT-12 to energize the reset coils on both the plate and modulator overload relays. To reset the overload relays after operation, reset coil K303A and K304B are energized by manually closing the O.L. RESET switch, which connects the reset coil to the 12 volt dc supply.

(6) Interlocks. - Application of plate power when one of the units is open is prevented by the cabinet interlocks S101 and S102. These are sensitive-type switches mounted on the left front of the cabinet so that they are closed only when the front panels are in place. These interlocks are connected in series with the coil of the plate power contactor K201 and K202 and all must be closed before K204 can be energized. The BATTLESHORT switch S204 may be placed in the ON position to short out the interlocks in case of erratic operation or failure of the interlock switches due to excessive shock such as from gunfire. Connections for an external voltmeter for use at checking the interlock circuit is provided at terminals 1 and 2 on terminal board TB201.

(7) HV Shorting Switches. - A spring-return push switch is provided to ground the high side of the HV and LV rectifier outputs as additional protection when the unit is withdrawn from the cabinet. Switch S203 in the Power Supply will ground the 1500 and 550v dc supply. When seperating the upper section of the Radio Transmitter unit,HV power is interrupted through the use of two "banana type" connectors. The 1500 v dc supply going to the plates of the modulator is controlled by the connection of J402 to J305. The 1500 v dc supply going to the PA plates is, in the same manner, connected by J405 to J307.

c. PROVISION FOR REMOTE OPERATION. - When remote operation of start- stop control of the transmitter is desired, a standard "six-wire remote control unit" similar to Navy type 23211 is connected to terminal board TB101. Terminals 1 and 2 are for the start function, terminals 2 and 3 for the stop function and terminal 4 is for a power-on indicator at the remote location. With the LOCAL-REMOTE switch S202 in the REMOTE position, the remote start and stop buttons are in parallel with the START and STOP buttons in the transmitter and operate start relay K203 in the same manner. The remote power-on indicator is energized over a closed contact of K204. In order to use remote control of stop-start it is necessary to tune the transmitter and then place the EMERGENCY-LINE and PLATE switches in ON position and place the ADJUST-TUNE-OPERATE switch in the OPERATE position to set up for automatic start.

7. MEASUREMENT AND INDICATION CIRCUITS

The various circuits for measurement of current,indication of operating functions and monitoring the transmitter are shown in the schematic

Figure 7-___.

a. MEASUREMENT OF CURRENT. - Three panel-mounted meters are provided and provision for connection of a fourth meter for test purposes is made.

(1) PA Cathode Current. - P.A. CATHODE milliammeter M302 is connected in the center-tap return circuit of the PA secondary of main filament transformer T304 between the overload relay and ground. It reads total dc space current for the two PA tubes and is used in tuning the power amplifier and matching the antenna.

(2) PA Grid Current. - P.A. GRID milliammeter M301 measures the dc current in the PA grid circuit which is a measure of the rf drive on the power amplifier. It is connected in the negative side of the bias supply resistor network which includes R444, R376 and R443.

(3) Modulator Cathode Current. - MOD. CATHODE milliammeter M303 measures the total dc space current of the modulator tubes and is used to ascertain that the modulators are operating properly with the transmitter on A-3 emission. It is connected in the center-tap return of the modulator secondary of main filament transformer T304 between the coil of modulator overload relay K302 and ground.

(4) IPA Cathode Current. - For use in case of trouble shooting or tuning difficulty, a meter link between terminals 1 and 2 of TB402 in the cathode circuit of the IPA amplifier-multiplier V404 can be removed and a 0-100 ma dc milliammeter inserted to read IPA cathode current.

(5) Interlock Test. - A 0-150 v ac meter may be connected to terminals 1 and 2 of TB201 to check the interlock circuit as explained in Section 7, paragraph___.

b. INDICATION CIRCUITS. - The completion of operating functions is indicated by lamps on the front panel of the equipment as follows:

(1) FILAMENT ON indicator I202 (white) - indicates when filaments are energized and is connected across the untapped 6.3 v secondary of main filament transformer T304.

(2) PLATE ON indicator I201 (red) - indicates when low voltage rectifier is energized and is connected in series with a closed contact of LV plate contactor K302 and energized from the 6.3 v untapped secondary of main filament transformer T304.

(3) BATTLESHORT ON indicator I203 (clear) - indicates when the BATTLESHORT switch is in the ON position, shorting out the interlocks. This neon lamp is connected in series with one pole of BATTLESHORT switch S204 and limiting resistor R209 across the 115 V supply.

(4) CARRIER ON indicator I301 (green) - indicates when the transmitter is keyed. At slow keying speeds the light follows the keying. At higher speeds the light stays on during key-up time. It is connected in series with resistor R313 and a contact of key circuit-change relay K302 in the keyed position, across the 12 v power supply.

All fuses are on the front panel of the Power Supply unit and are of the small indicating-pin (red) type.

c. MONITORING THE TRANSMITTER. - No special provisions have been made for frequency monitoring this transmitter. Frequency measuring equipment may be loosely coupled to the antenna lead-in to pick up a sample of the signal. A receiver to be used for "break-in" operation only can be connected at jack J406. For listening purposes, however, no connection need be made to the transmitter. For monitoring the audio signal, a headset may be plugged into HEADSET jack J302 on the front panel. The connection for the headset and use of the SIDETONE-ADJUST control are covered in paragraph 3 above.

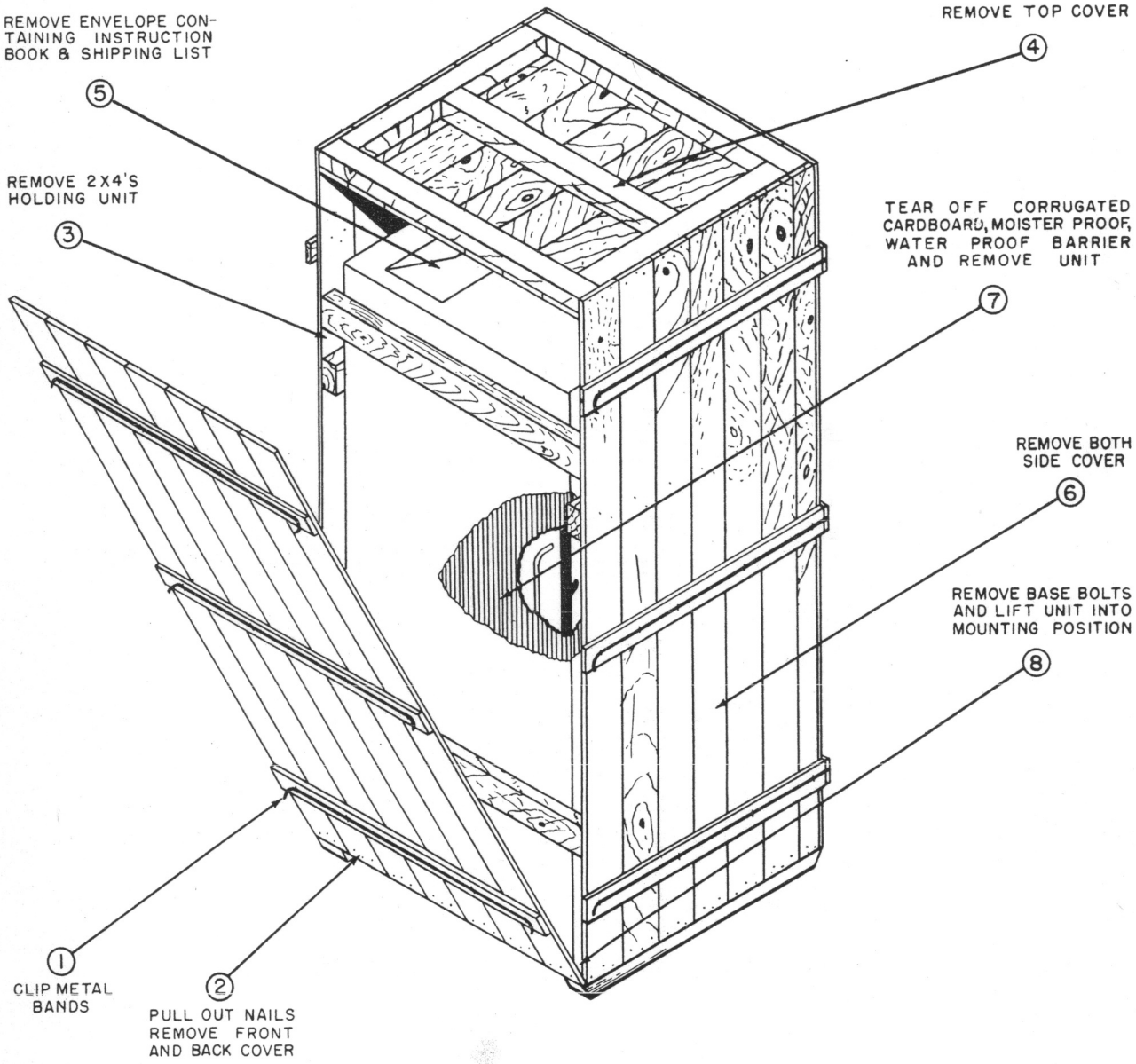

Figure 3-1. Unpacking Procedure

SECTION 3

INSTALLATION

1. UNPACKING

a. GENERAL. - The entire equipment is packed in a wooden box. Equipment spare parts are packed in a metal spare parts box and a carton of tubes. Care should be exercised in opening the packing cases and removing packing materials. The use of hammers or pry-bars should be avoided, as their use may damage the equipment.

b. UNCRATING THE TRANSMITTER. - The procedure to be used in unpacking Radio Transmitting Set AN/URT-12 is shown in Figure 3-1. The equipment packing case is marked with a list of the material contained therein. Items should be checked against this list or against the contractor's shipping list included with the Instruction Book in an envelope attached to the equipment.

2. WITHDRAWAL OF UNITS FROM THE CABINET.

a. The Power Supply and Radio Transmitter units slide in and out of the cabinet for inspection and servicing. To withdraw any one of the units from the cabinet to the service position:

(1) Loosen the thumb screws located on the front panel.

(2) Slide the unit out by pulling forward on the front handles until the stops engage.

NOTE

With power on, the transmitter interlock circuit will open, removing plate power.

b. RETURN OF UNITS TO CABINET. - Complete withdrawal of any one of the units from the cabinet is prevented by the chassis slide lock. To return the unit into the cabinet:

(1) Release the slide lock levers on each side of the chassis, disengaging the stops and push the unit in ward at the same time.

(2) Tighten the thumb screws on the front panel.

3. INSPECTION OF EQUIPMENT.

a. Immediately after unpacking the equipment, examine it to determine whether any shipping damage has occurred.

(1) Check the switches and control knobs on the front panel to see that they are tight on their shafts. Bristol set-screw wrenches are provided for tightening the set-screws. These wrenches (H202, H203, H204, H205) are mounted on clips inside the Power Supply, PP-950/URT-12.

(2) Loosen the thumb screws and slide the units out one at a time.

WARNING

NEVER WITHDRAW THE POWER SUPPLY
UNLESS THE TRANSMITTER IS SECURELY
MOUNTED TO BOTH TABLE AND BULKHEAD.

(3) Examine the vacuum tubes and sockets for damage. Examine all exposed parts and wiring for any obvious defects, such as cracked insulation and shorted or loose wires.

(4) Repeat (1), (2) and (3) for each unit.

(5) Open the Spare Parts Boxes and examine the contents for any obvious damage.

4. INSTALLATION.

a. LOCATION OF EQUIPMENT. - When selecting a permanent location for the transmitter, the following should be given consideration:

(1) Weight of the Equipment; the transmitter weighs approximately 224 pounds. Make certain that the mounting table will support the added weight of the transmitter without strain.

(2) Space around the Transmitter; there must be adequate space in front of the transmitter to allow for withdrawal of the units from the cabinet. Refer to Figure 3-2.

(3) Adequate Ventilation; cooling air is taken in at the bottom of the cabinet and exhausted through the top rear. Make sure that intake and outlet are not blocked.

(4) Proper Mounting; the transmitter should be mounted on a level base which is not subjected to vibration.

(5) External Connections; provide sufficient space for power supply cable and remote control cable (if used) connections. Antenna connections should be brought in as directly as possible, and the transmission line properly supported. Ground straps should be as short as possible.

b. MOUNTING. - Refer to Figure 3-2 for overall and mounting dimensions. The cabinet is provided with shock and vibration mounts at the base and is arranged for snubbing shock and vibration through mounts located at the upper rear of the cabinet. These snubber mounts are to be attached to the adjacent bulkhead. The following bolt sizes are recommended for mounting:

(1) Four 5/16 - 18 thread machine bolts are to be used for cabinet base mounting.

(2) Eight 1/4 - 20 thread machine bolts are to be used to secure the snubber brackets to the bulkhead. Care should be exercised in marking and drilling the mounting holes.

c. EXTERNAL CABLING. - Cable entrances are provided at the rear of the cabinet. Access plates are provided to conveniently mount cables. Refer to Figure 3-3.

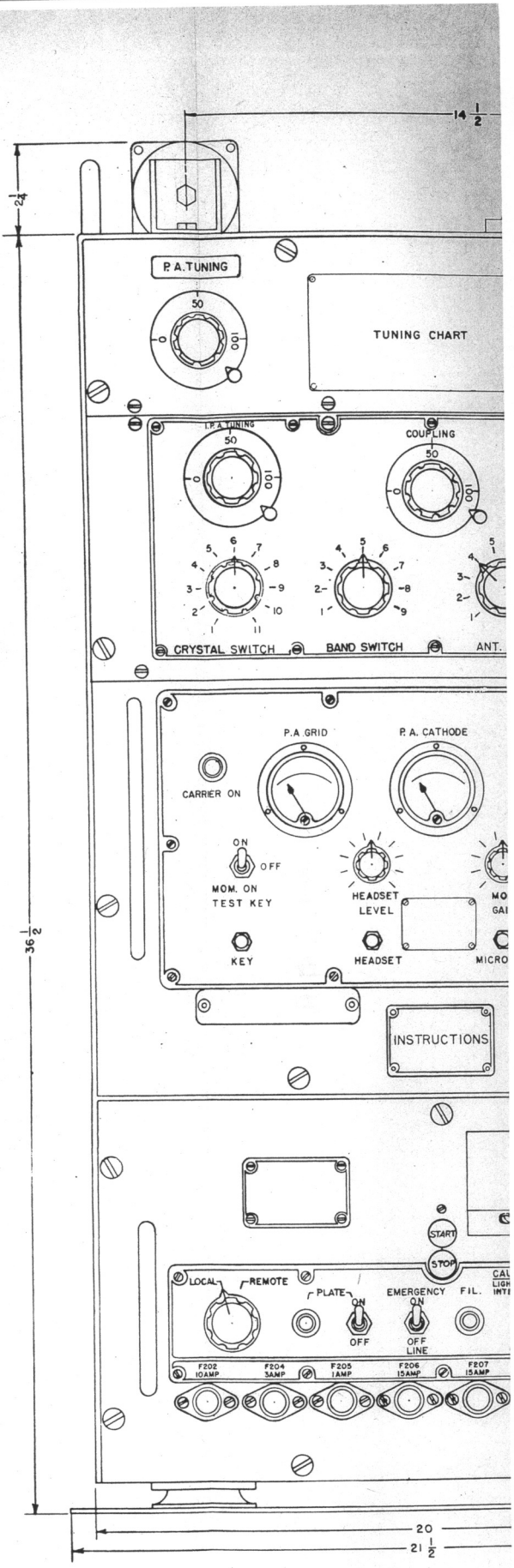
14 1/2
2 1/4
P.A.TUNING
50
0
100
TUNING CHART
I.P.A.TUNING
COUPLING
CRYSTAL SWITCH
BAND SWITCH
ANT.
P.A. GRID
P.A. CATHODE
CARRIER ON
ON
OFF
MOM. ON
TEST KEY
HEADSET
LEVEL
KEY
HEADSET
INSTRUCTIONS
START
STOP
LOCAL
REMOTE
PLATE
EMERGENCY
FIL.
OFF
OFF
LINE
F202
10AMP
F204
3AMP
F205
1AMP
F206
15AMP
F207
15AMP
36 1/2
20
21 1/2

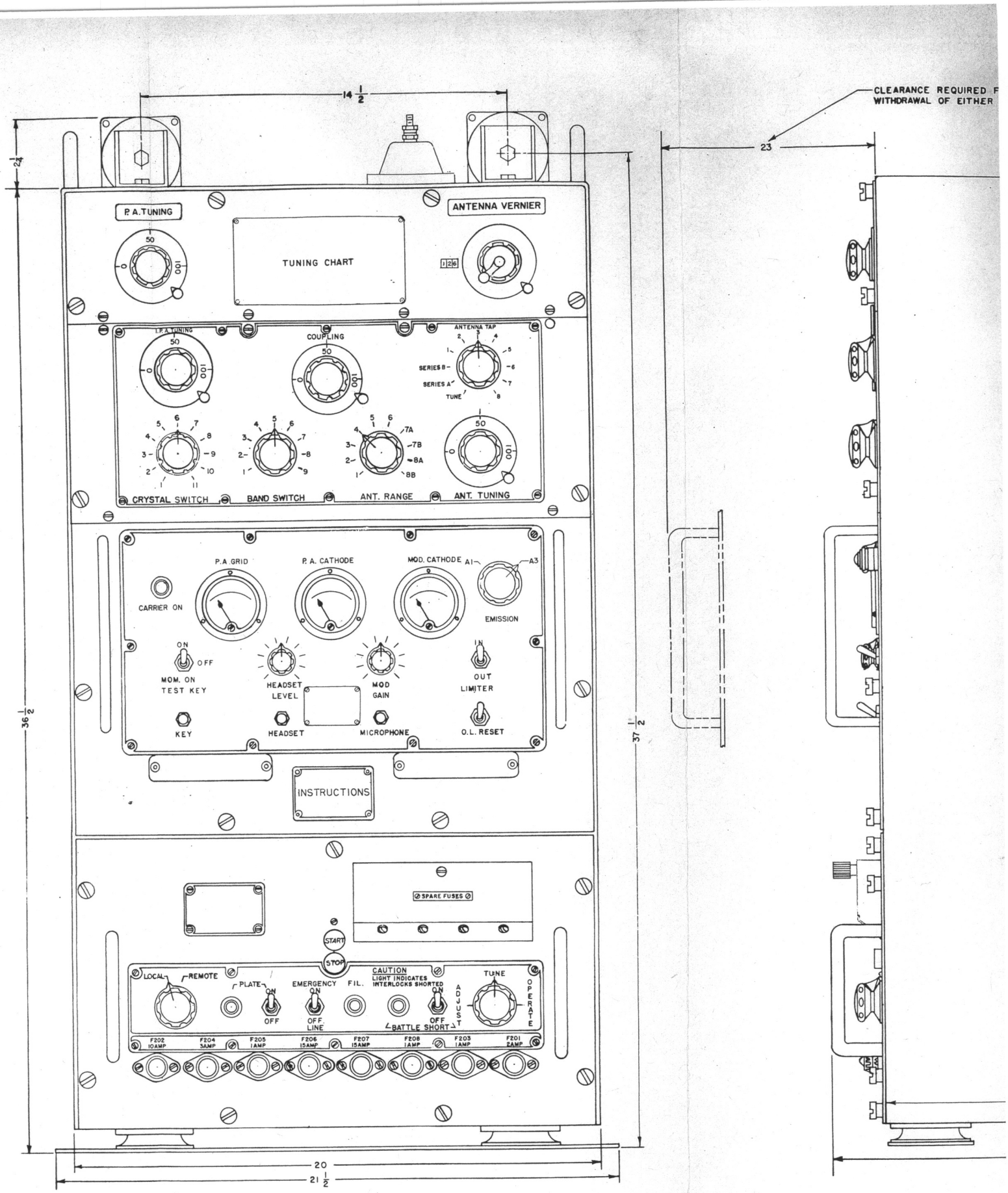
14 1/2
2 1/4
36 1/2
37 1/2
20
21 1/2
23
CLEARANCE REQUIRED F
WITHDRAWAL OF EITHER
P.A. TUNING
ANTENNA VERNIER
TUNING CHART
L.P.A. TUNING
COUPLING
ANTENNA TAP
SERIES B
SERIES A
TUNE
CRYSTAL SWITCH
BAND SWITCH
ANT. RANGE
ANT. TUNING
P.A. GRID
P.A. CATHODE
MOD. CATHODE
A1
A3
EMISSION
CARRIER ON
ON
OFF
MOM. ON
TEST KEY
HEADSET
LEVEL
MOD
GAIN
IN
OUT
LIMITER
KEY
HEADSET
MICROPHONE
O.L. RESET
INSTRUCTIONS
SPARE FUSES
START
STOP
LOCAL
REMOTE
PLATE
ON
OFF
EMERGENCY
ON
OFF
LINE
FIL.
CAUTION
LIGHT INDICATES
INTERLOCKS SHORTED
BATTLE SHORT
ON
OFF
ADJUST
TUNE
OPERATE
F202
10AMP
F204
3AMP
F205
1AMP
F206
15AMP
F207
15AMP
F208
1AMP
F203
1AMP
F201
8AMP

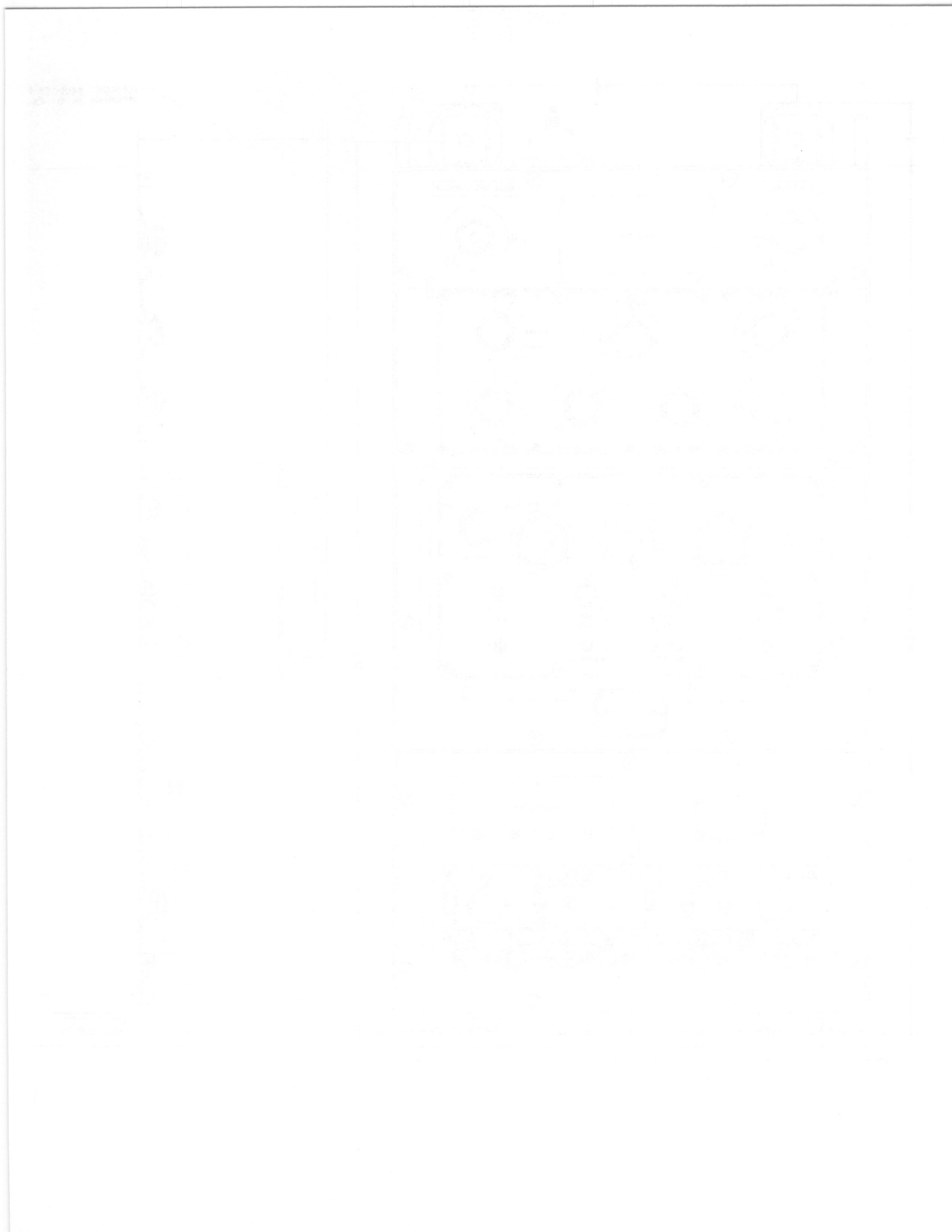

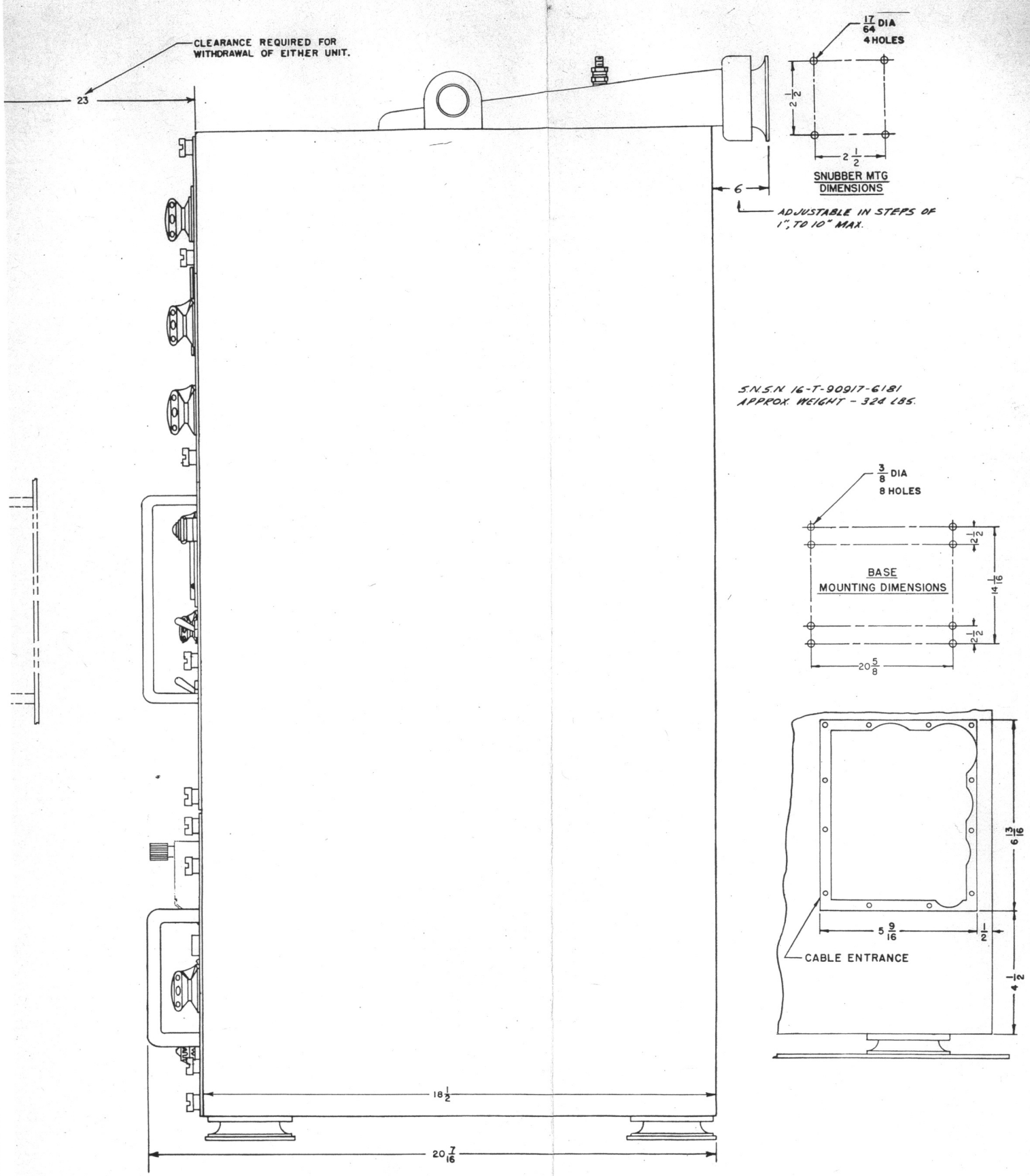

Figure 3-2. Outline and Mounting Dimensions

(1) The rear entrance plates should be marked and drilled to fit the desired cables. It is recommended that stuffing glands be incorporated to protect the cables. The cables should be clamped securely to the access plate after installation.

(2) When remote control of the transmitter is desired, connect the remote control cables to terminal boards TB 101 and TB 102 as shown in Figure 3-4.

TABLE 3-1. RECOMMENDED REMOTE CONTROL CABLES

For Terminals	Cable Type	Number of Leads to each Terminal	Spare Conductor
1 to 6 Inclusive 9, 10 and 11	MHFA-10	1	1
7, 8, and 12	MHFA-7	2	1
13 and 14	TTHFWA-1-1/2	1	1

(3) Connect the input power line (DHFA-9) from 115 volts, 50 or 60 cycles, single phase, AC, power source to TB 102 terminals 23 and 24. The above mentioned cables are not supplied by the contractor.

(4) For the purpose of controlling receiver protective relays or disabling devices in the receiver, Relay K302, in the transmitter incorporates contacts D which are wired to terminals 15, 16, 17 on terminal board TB102 to provide operation equivalent to a SPDT switch. These contacts operate with control of the carrier.

(5) Receiver audio output is connected to Terminal Board TB102, terminals 13 and 14.

d. GROUNDING. - A good low-resistance ground system is essential. Failure to provide an adequate ground connection will seriously impair transmitter performance. If the vessel hull is metal, a 1 inch wide by 1/16 inch thick copper strap or braid should be run from the ground stud to the nearest point which is an integral part of the ship's metal hull. Refer to Figure 3-3 for location of ground stud.

e. ANTENNA. - The recommended wire size for the antenna is 19 strand No. 16 AWG flexible wire. The antenna may be of the "T" or inverted "L" type, and should be installed "in the clear" and as high as possible. For maximum effectiveness, the longest antenna that can be resonated at the highest frequency should be used. For example, if the transmitter cannot be resonated at its lowest frequency in the 2000 to7500 Kc range, a longer antenna is necessary. Likewise, if resonance is not obtained at the highest frequency, a shorter antenna is needed. A suitable antenna for shipboard use would be about 54 feet long to be installed at least 20 feet in height above the deck. The effective length of the antenna is measured from the transmitter output terminal to the far end of the antenna. An insulator of the bowl type is used to bring the antenna lead through the deck or building. The lead-in should be supported by suitable stand-off insulators (approximately 3 inch long) and high voltage cable should be used as a safety precaution.

Connect the antenna line to the stud of the feed-through insulator E101 located on top of the transmitter cabinet. Copper tubing is recommended for connecting the antenna to E101.

5. INITIAL ADJUSTMENT

After the transmitter has been completely installed, the following checks and adjustments are to be made. Section 7 contains additional information on some of these adjustments and should be consulted if difficulties are encountered.

a. MECHANICAL CHECKS. - A complete and detailed inspection of the transmitter should bemade before any power is applied. Check the following features:

(1) Connections; all plug and jack connections should be tight. Terminal screws on terminal boards should be tight. Refer to Figure 3-5 and photographs in Section 7 for location of parts.

(2) Tubes Properly Set in Sockets; tubes seated properly, clamps or shield tight and top connectors tight. Refer to Section 5, Table 5-5 for location of tubes.

(3) Fuses in Fuseholders; fuses should make proper contact and be of proper rating. Refer to Section 5, Table 5-2 for location and rating of fuses.

(4) Pilot Lamps in Socket; remove pilot lamp caps and check that all lamps are in place and seated properly in holders. Refer to Section 5, Table 5-4.

(5) Shaft coupling set screws are tight.

(6) Relays Operate Satisfactorily; manually operate all relays to check that they are free. Burnish all relay contacts using No. 0000 sandpaper or a burnishing tool.

(7) Insulators are Clean; wipe dust off all insulators using a lint-free cloth.

(8) Toggle switches operate properly.

(9) All Knob Control Operate Properly; set-screws are tight and knob rotates through proper angular range.

(10) Interlock Checks; withdraw each unit to the service position and manually check that all cabinet interlock switches are free. Push the protruding plunger to make sure springs are not jammed. Check also the H. V. shorting switches on the individual chassis, make certain that the contacts are clean, burnish these contact surfaces, if necessary, with No. 0000 sandpaper or a burnishing tool. Refer to Section 7 photographs for the location of interlocks and H. V. shorting switches.

b. ELECTRICAL CHECKS. - The best and simplest overall check of the installation wiring of the transmitter is to check the resistance to ground from each terminal connection. Use an ohmmeter (Volt-Ohm-Milliameter IS-189 or equivalent) and check between each terminal and ground for all main terminal boards. Resistance values are given in Section 7, Table 7-3.

Crystals are not supplied with this equipment. Check to see if crystals have been previously installed and are secure in their sockets. If crystals have not been installed refer to Section 5, paragraph 3-d for instructions on inserting crystals.

6. INITIAL START-UP

After installation of the Radio Transmitting Set has been completed (including antenna and ground connections), start the equipment up as follows:

NOTE

Before any power is applied study the normal operating procedures given in Section 4.

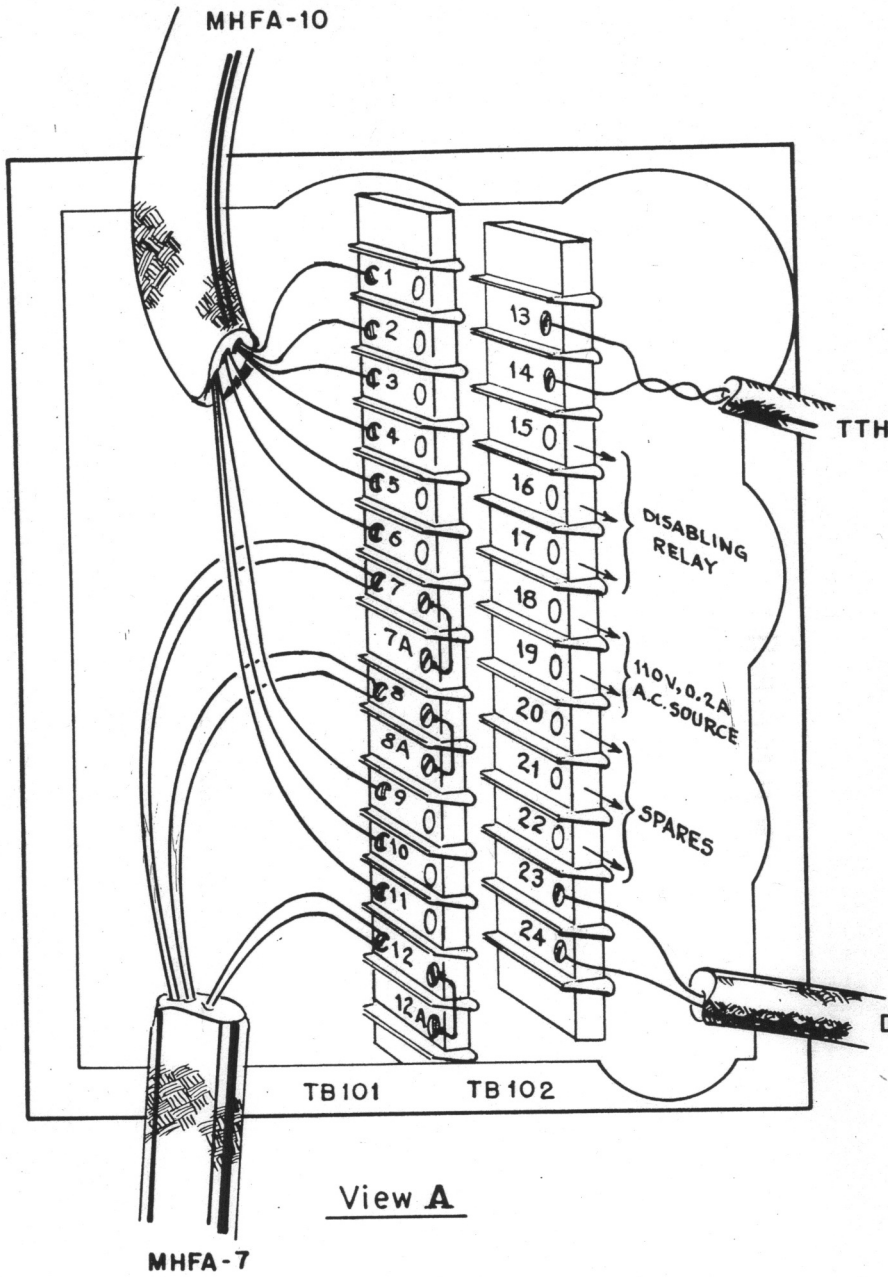

View **A**

NOTE
1- * NO
2- ALL C

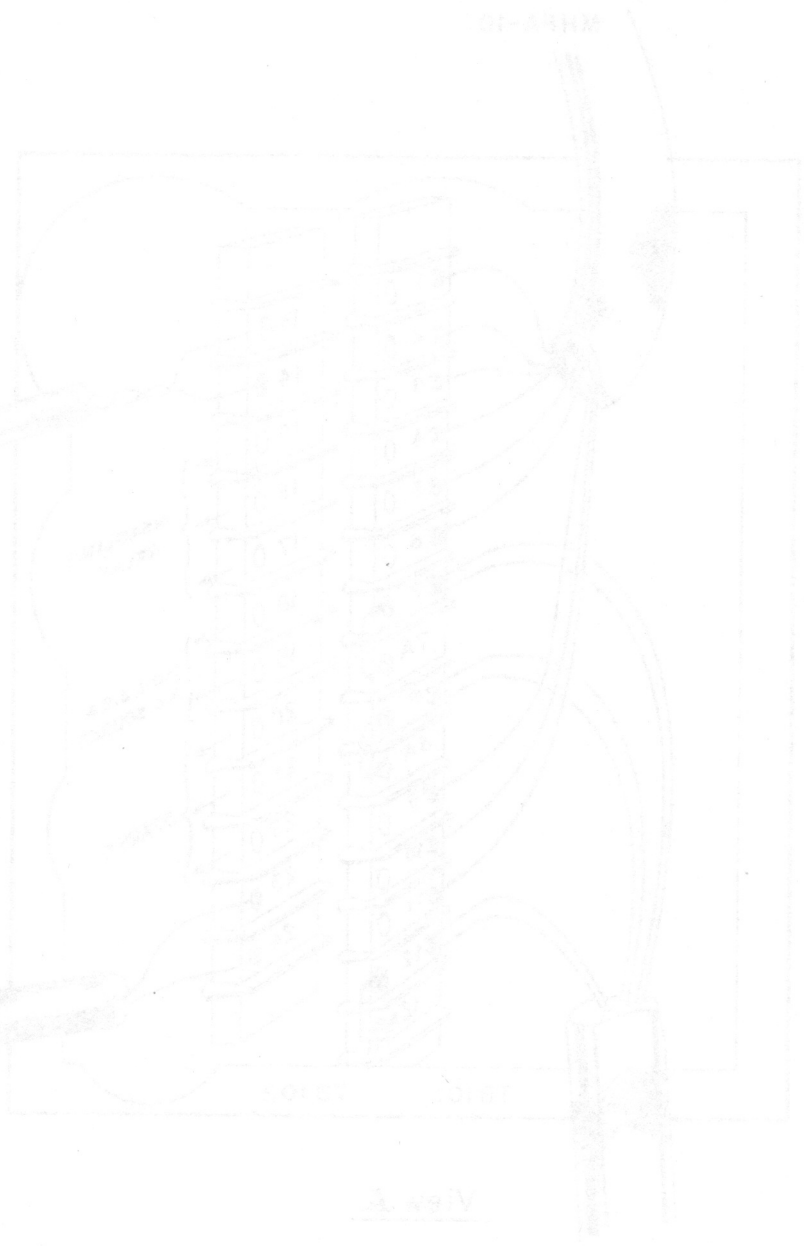

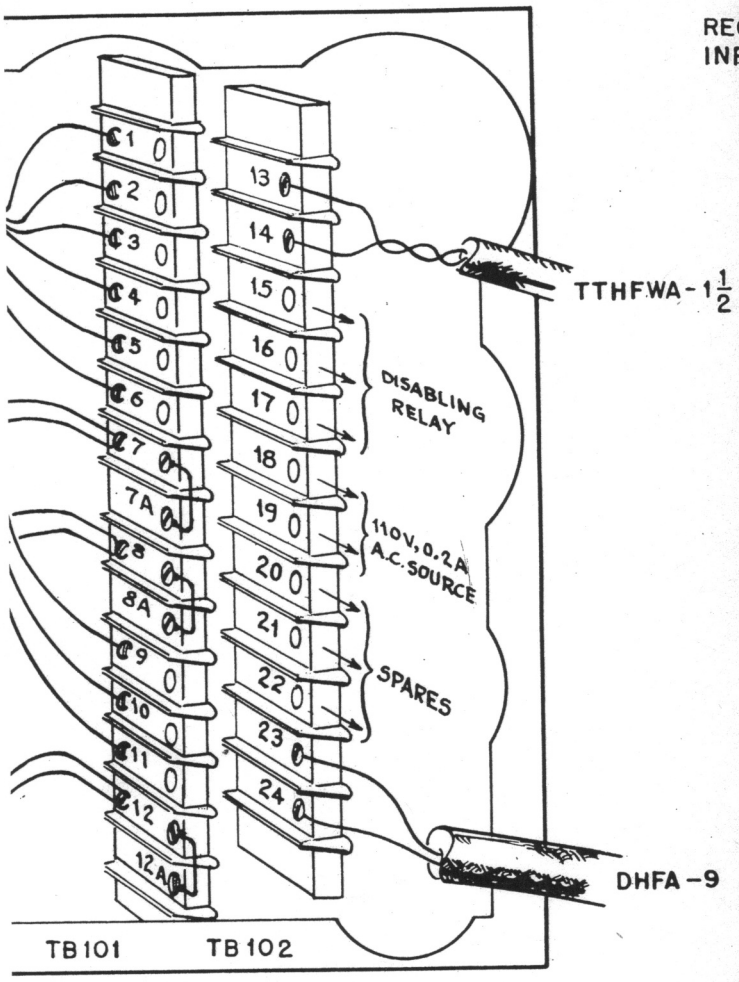

View A

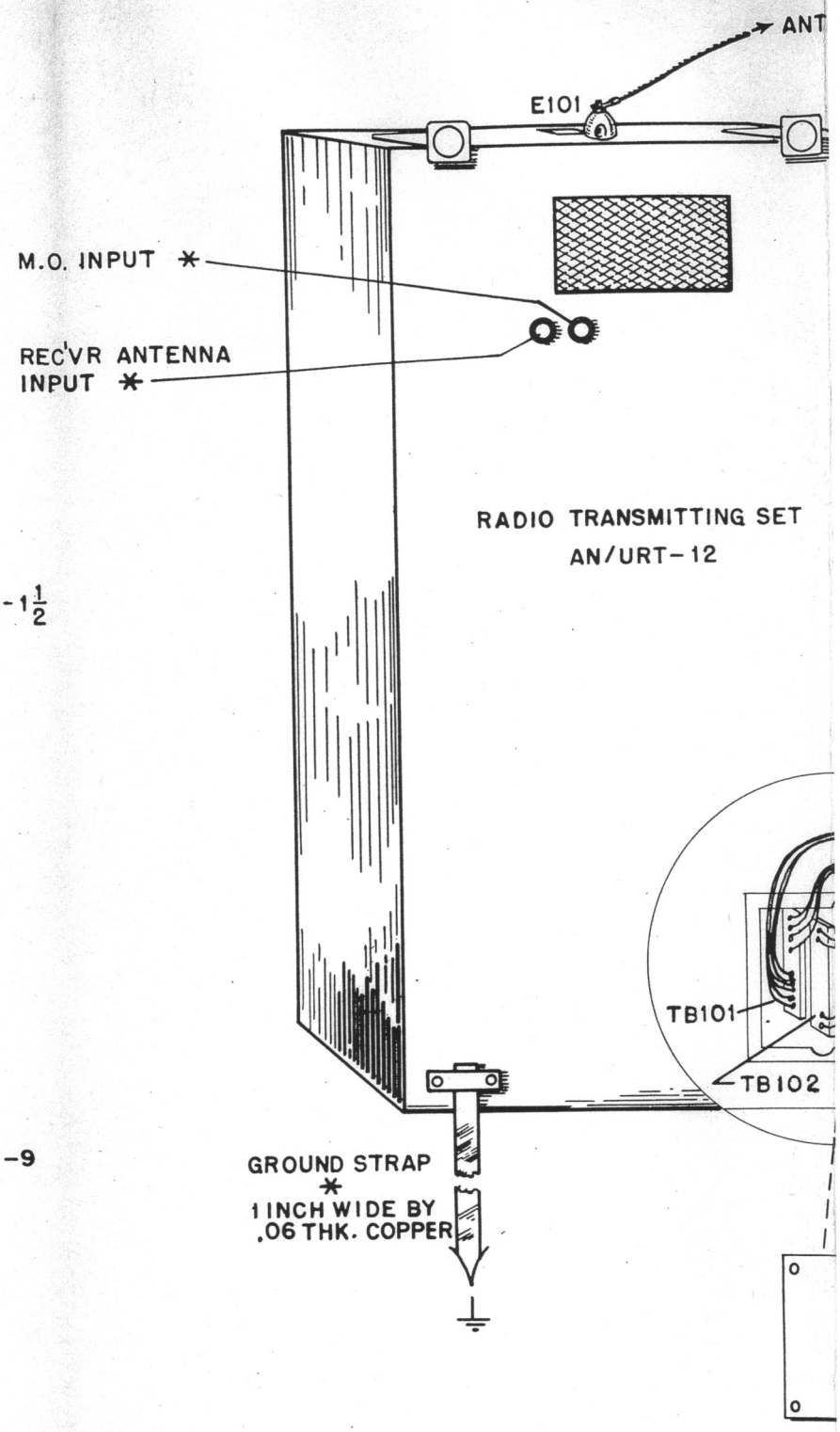

NOTES —

1- * NOT SUPPLIED BY CONTRACTOR

2- ALL CABLES PER SPEC. MIL-C-915A

Figure 3-3 Externa

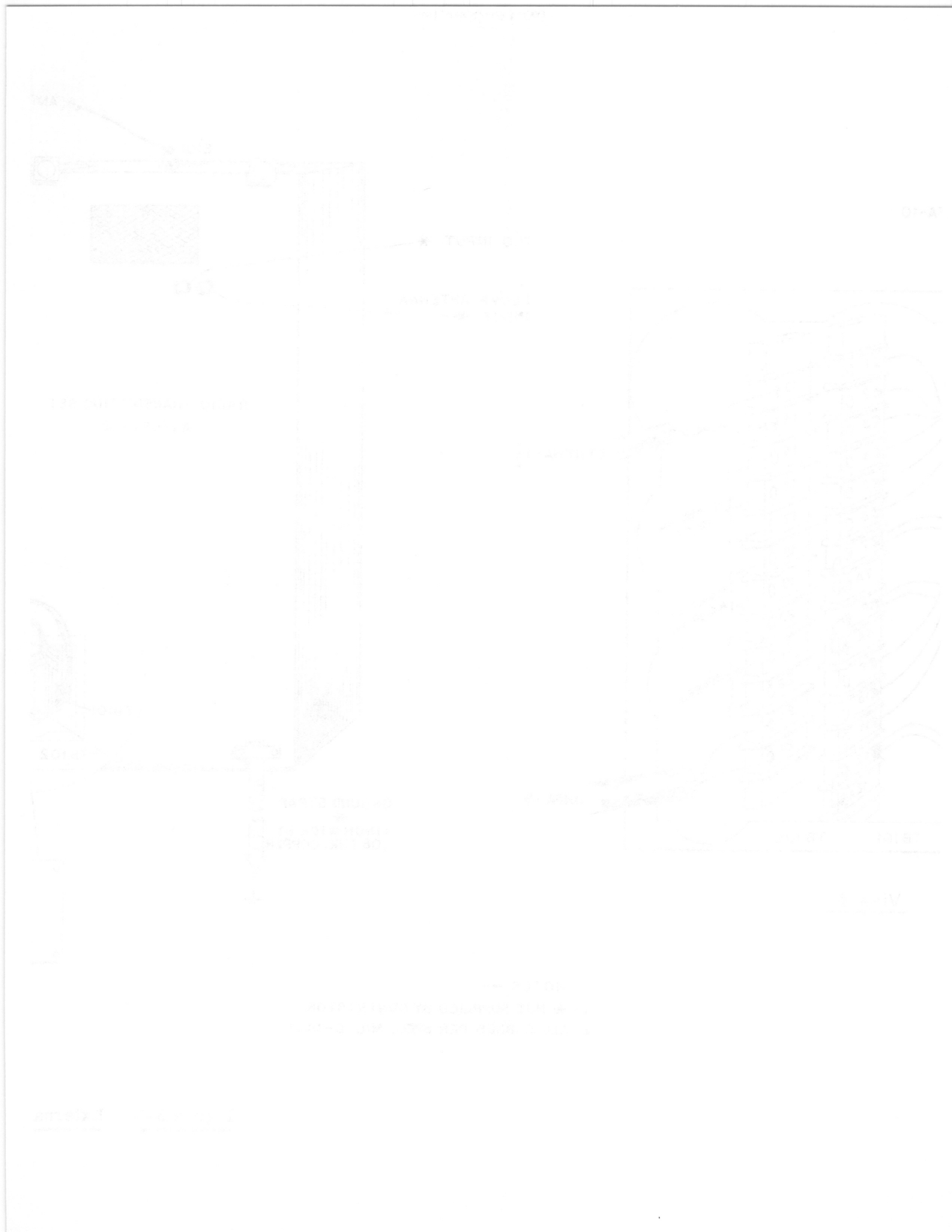

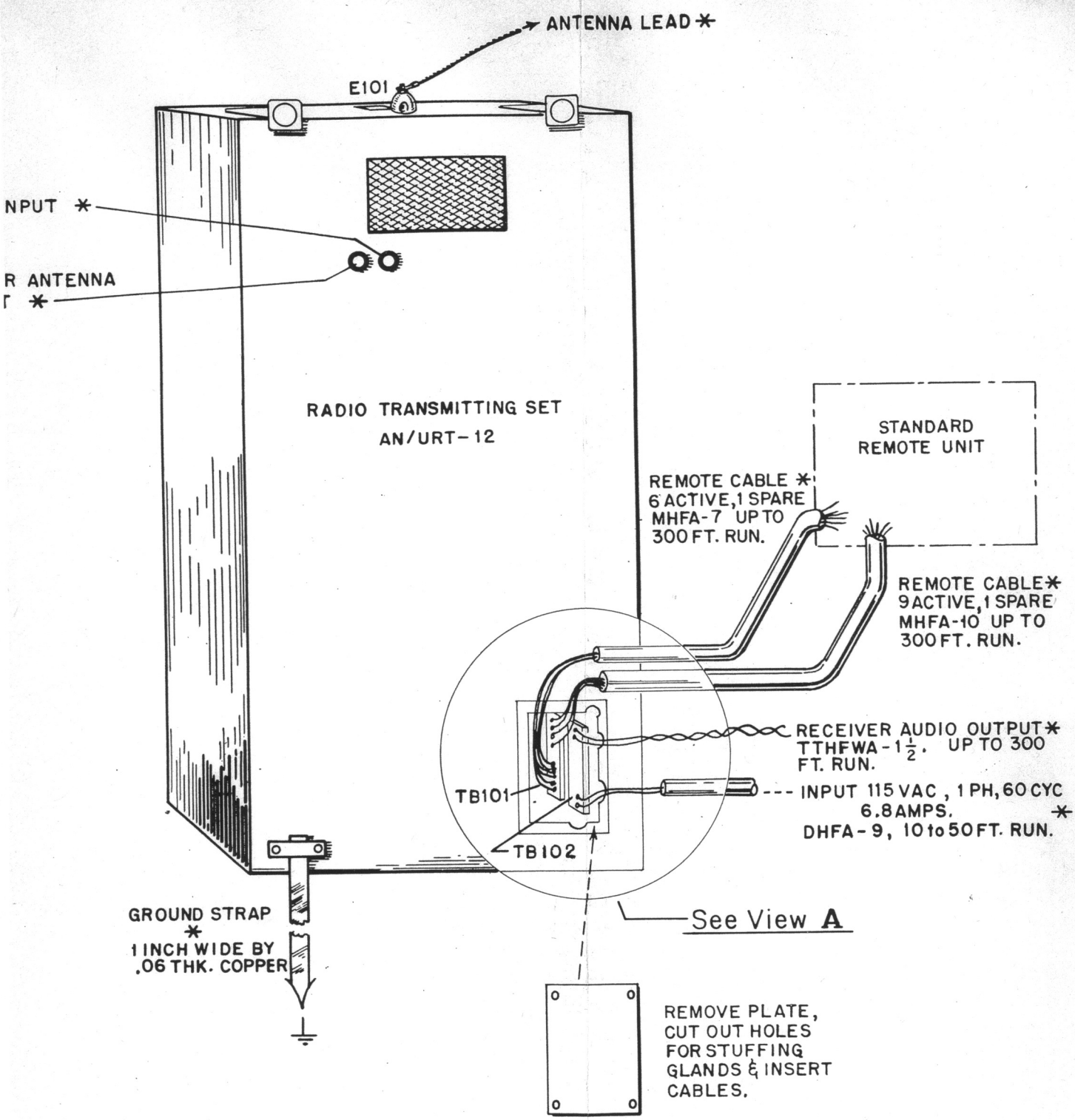

PPLIED BY CONTRACTOR
S PER SPEC. MIL-C-915A

Figure 3-3 External Cabling for AN/URT-12

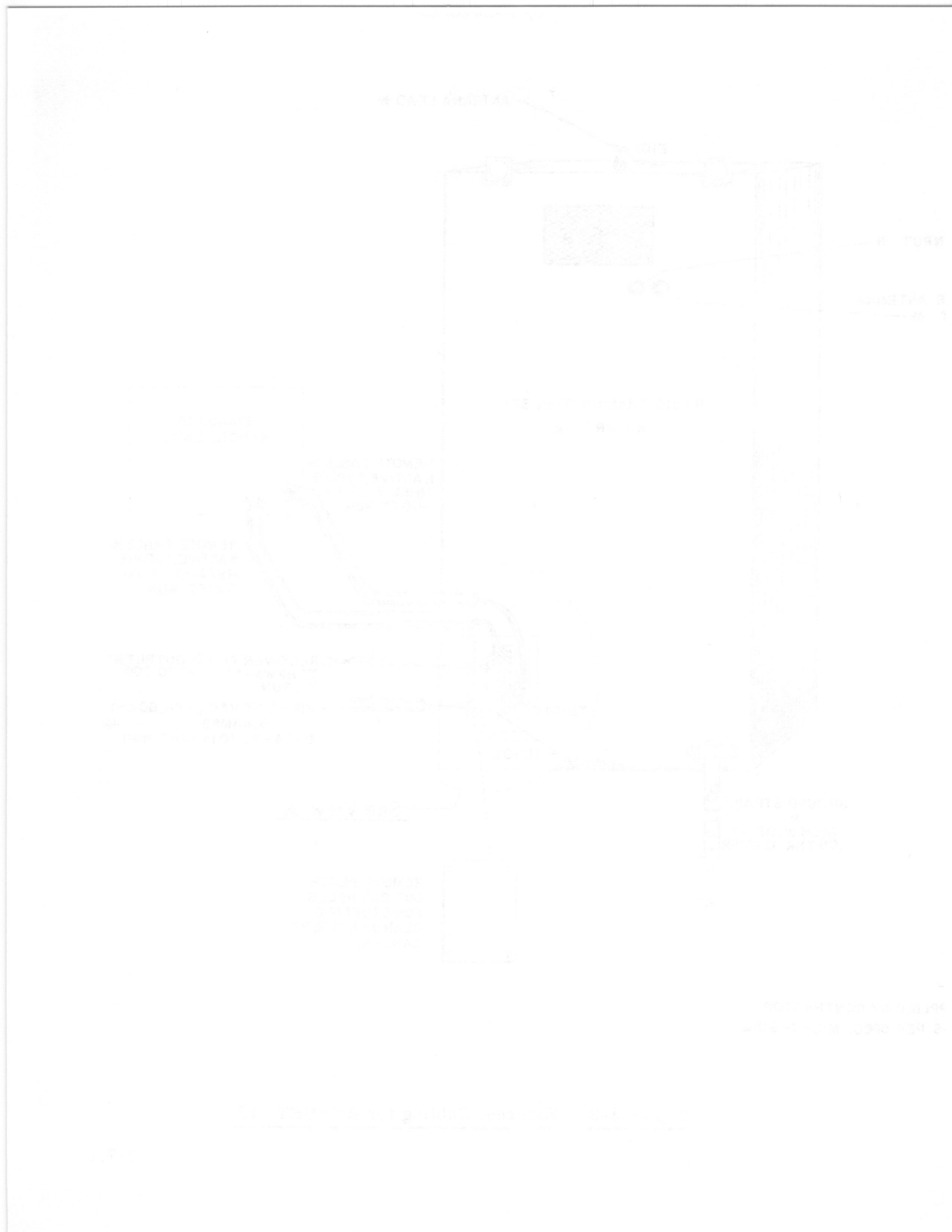

Step 1. Refer to Section 4, paragraph 4c and complete Steps 1 to 7 Inclusive. Check that FILAMENT indicator lights. Check also that blower B401 is furnishing air for cooling.

Step 2. Time delay relay K203 will commence operation the moment the START button is depressed. The delay time on this relay may be more than but should not be less than 30 seconds. Adjust this relay, if necessary, in accordance with Section 7, paragraph ___.

Step 3. Continue with starting procedure, Section 4, paragraph 5, Steps 8 to 14 inclusive. Check that PLATE indicator lights.

Step 4. Check the interlock circuit with a Volt-Ohm-Milliameter IS-189 or equivalent as described in Section 7, paragraph ___. Terminal board TB 201 is provided for connection of the meter.

Step 5. Place BATTLESHORT switch in ON position: the indicator light will glow. Return the BATTLESHORT switch to the OFF position.

7. INITIAL TUNING

a. After completion of the checks of the power controls, proceed to tune the transmitter beginning with Step 15 and/through Step 21. Load-out the Transmitter in accordance with procedure of paragraph 6, Section 4.

NOTE

Choose one operating frequency in each of the nine bands, starting with position numbered 1 on the BAND SWITCH.
If a master oscillator is available perform this operation for both crystal and master oscillator in at least one frequency in each band.

b. Check that the transmitter is operating properly for A-3 emission in accordance with paragraph 7 of Section 4.

c. Check that the O. L. RESET operates: Detune the P.A. TUNING control. This will overload the P.A. tubes. The overload relay K304 will operate, removing plate power. Reset P.A. TUNING to original value. Press the O.L. RESET switch to energize the reset coil and put the transmitter back into operation. Adjust the O.L. RESET, if necessary, in accordance with Section 7, paragraph ___.

d. Check the ANTENNA TAP, ANTENNA RANGE and BAND SWITCH, one at a time, by slowly rotating the switch to its next position. The interlocks attached to the switch will remove ac voltage from the plate supply as shown by a sharp decrease on the P.A. CATHODE meter. The PLATE indicator light will also flash out.

e. Check the operation of the transmitter from the remote control unit (if used). Refer to Section 4, paragraph 9, and complete Step 1 to 6 inclusive.

8. TRANSMITTER PERFORMANCE TESTS.

Before the transmitter is used under service conditions, perform the following final tests:

a. TYPE AND QUALITY OF EMISSION: Use a communi cations receiver as a monitor. Two methods are available: either connect the receiver audio output to terminals 13 and 14 of terminal board TB 102 and insert headphones in the HEADSET jack located on front panel of Radio Transmitter T-408/URT-12 or use a nearby receiving station to monitor the signal. Tune the receiver to the operating frequency of the transmitter. Key the transmitter manually and also with an automatic keyer. Check the quality of the signal for key-clicks and lilt. With the transmitter operating at full power on voice modulation, compare the MOD. CATHODE meter reading with the typical values given in Table 4-6. The The MOD. GAIN control should be adjusted to the operators' speaking level. Increase or decrease in accordance with the amount of background noise present. The LIMITER is placed in th e IN position to provide high level modulation without over-modulating the output signal. Check the quality of emission on a monitor receiver.

b. RF POWER OUTPUT: With the transmitter operating on A-1 at full power, check the P.A. CATHODE meter and the P.A. GRID meter readings against the inspection test data or Table 4-6. Repeat for full power output for A-3 operation.

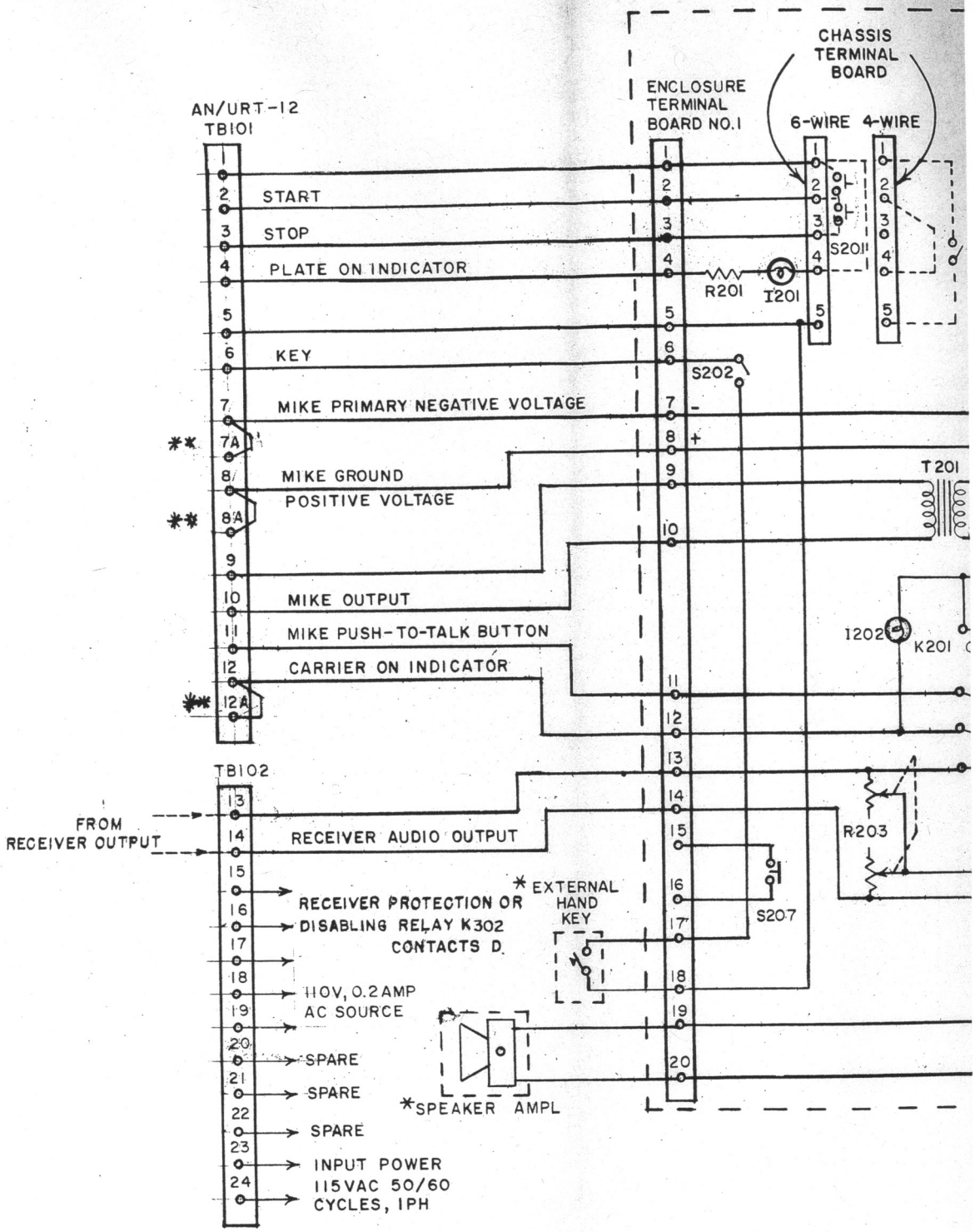
AN/URT-12
TB101
ENCLOSURE
TERMINAL
BOARD NO.1
CHASSIS
TERMINAL
BOARD
6-WIRE
4-WIRE
START
STOP
PLATE ON INDICATOR
KEY
MIKE PRIMARY NEGATIVE VOLTAGE
MIKE GROUND
POSITIVE VOLTAGE
MIKE OUTPUT
MIKE PUSH-TO-TALK BUTTON
CARRIER ON INDICATOR
R201
I201
S201
S202
S207
T201
I202
K201
R203
TB102
FROM
RECEIVER OUTPUT
RECEIVER AUDIO OUTPUT
RECEIVER PROTECTION OR
DISABLING RELAY K302
CONTACTS D
*EXTERNAL
HAND
KEY
110V, 0.2AMP
AC SOURCE
SPARE
SPARE
SPARE
INPUT POWER
115VAC 50/60
CYCLES, 1PH
*SPEAKER AMPL

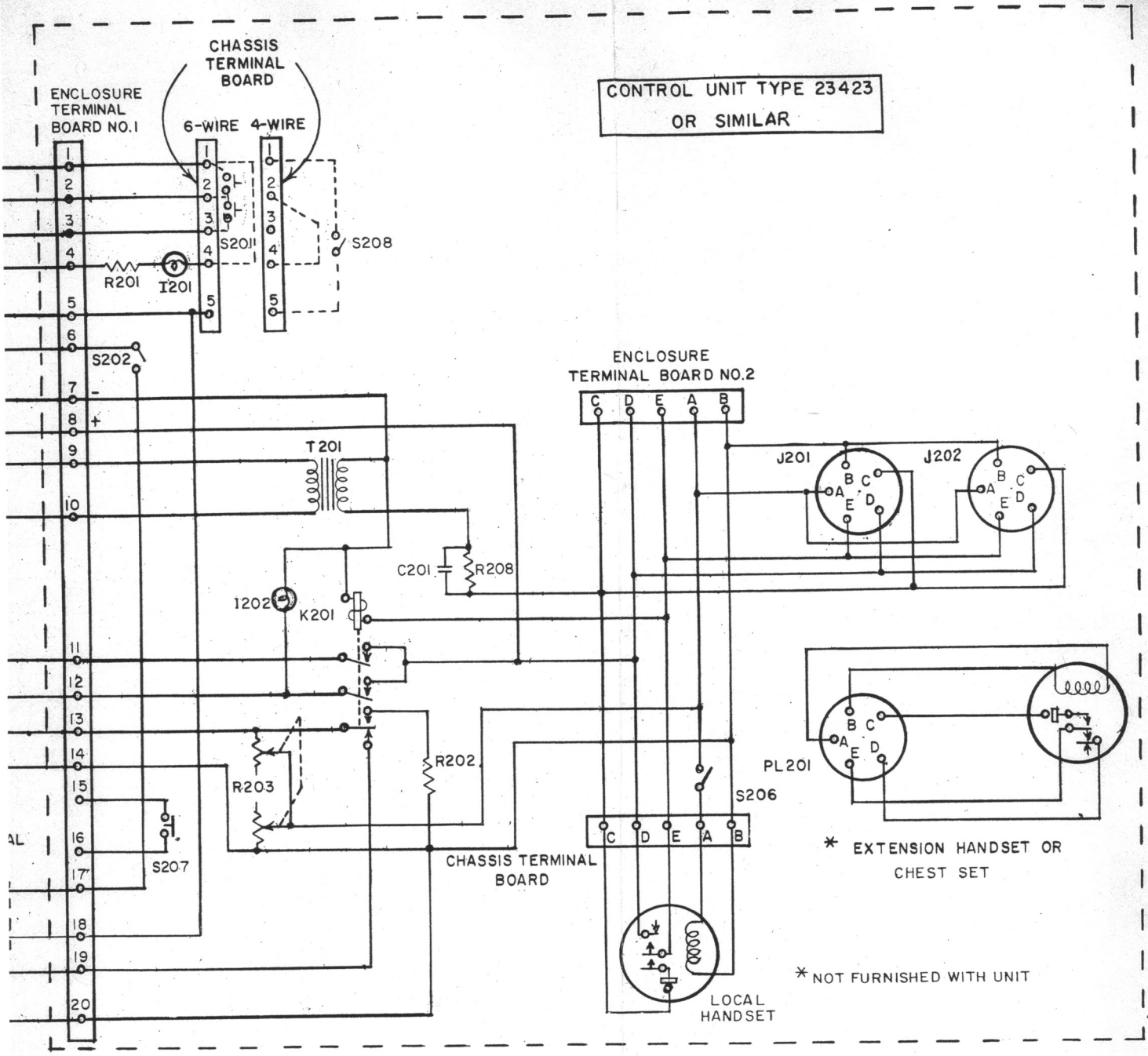

NOTE:
** WHEN USING NAVY TYPE 23423, REMOTE CONTROL UNIT,
CONNECT 7A FROM TB101 TO 7A ON CONTROL UNIT
CONNECT 8A FROM TB101 TO 8A ON CONTROL UNIT
CONNECT 12A FROM TB101 TO 12A ON CONTROL UNIT

Figure 3-4. Remote Control Connections

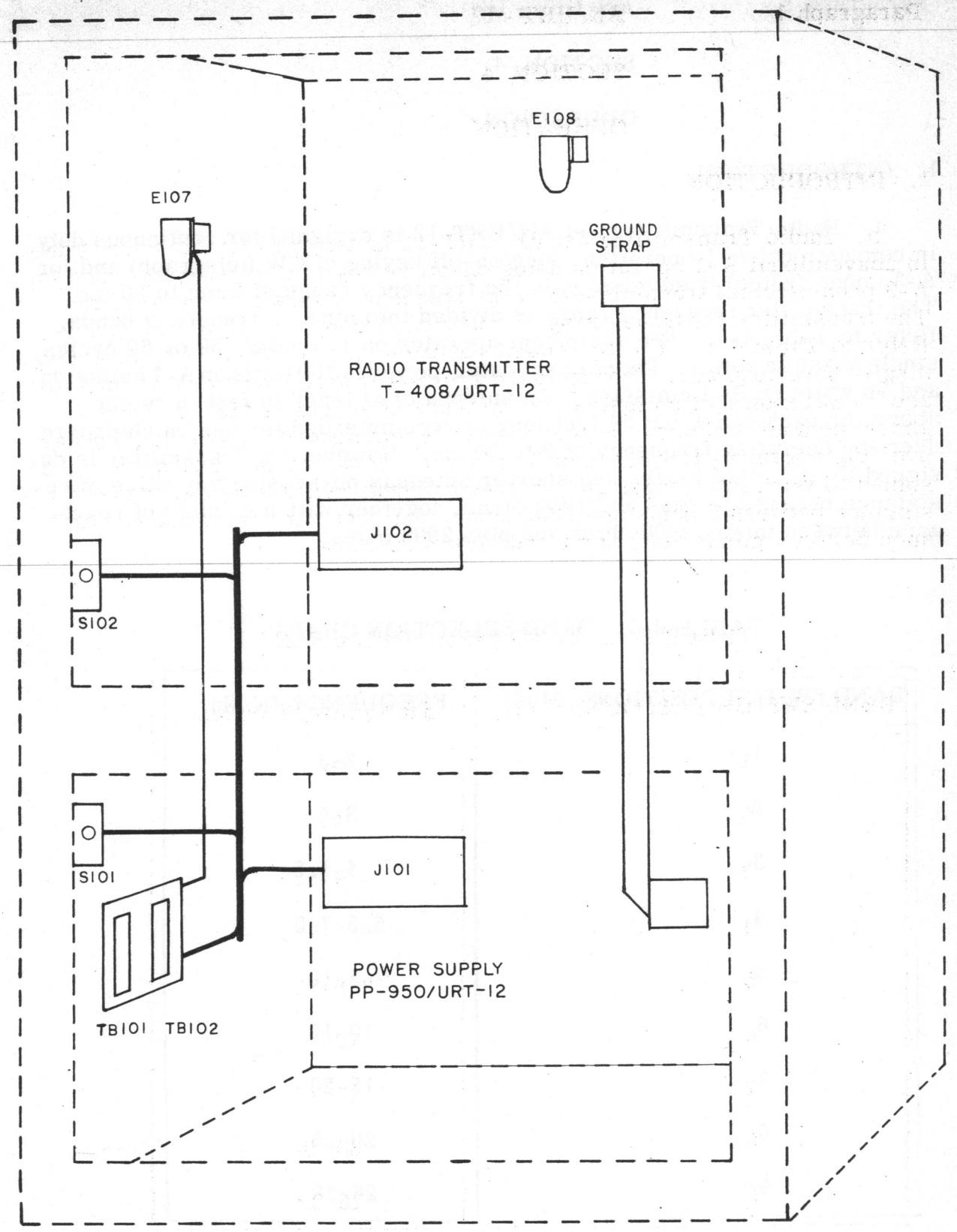

Figure 3-5. AN/URT-12, Internal Cabling Diagram

SECTION 4

OPERATION

1. INTRODUCTION.

a. Radio Transmitting Set AN/URT-12 is designed for continuous duty in conventional A-1 operation using on-off keying of CW (telegraph) and for A-3 phone (voice) transmission in the frequency range of 2 mc to 30 mc. The transmitter frequency range is divided into nine frequency bands. Refer to Table 4-1. The equipment operates on 115 volts, 50 or 60 cycles, single phase ac power. The nominal output power is 100 watts on A-1 emission and 75 watts on A-3 emission. An antenna of at least 20 feet in height above the deck and about 54 feet long is recommended for use on shipboard over the operating frequency of 2 to 30 mc. However the transmitter is designed to work into longer and shorter antennas possessing any value of resistance between 5 ohms and 1800 ohms, together with any value of reactance between minus 2000 ohms and plus 2000 ohms.

TABLE 4-1. BAND SELECTION CHART

BAND SWITCH POSITIONS (S402)	FREQUENCY IN Mc.
1	2-3
2	3-4
3	4-5.5
4	5.5-7.5
5	7.5-10
6	10-15
7	15-20
8	20-26
9	26-30

b. The transmitter uses a crystal controlled oscillator, broad-band amplifier, intermediate power amplifier, power amplifier and the associated output network. All stages above the broad-band amplifier are manually tuned. Selection of any one of the ten crystals provides the desired fundamental frequency within the 2 to 7.5 mc range. By multiplication in the IPA stage the transmitter will produce a carrier frequency which is twice the fundamental frequency in the 7.5 to 15.0 mc range and four times the crystal frequency in the 15 to 30 mc range. To obtain the correct crystal frequency divide the desired output frequency by the multiplying factor shown in Table 4-2 below.

TABLE 4-2. CRYSTAL FREQUENCY RANGE

Crystal Frequency Range in Mc	Multiplying Factor	Output (Carrier) Frequency Range in Mc
2 to 7.5	1	2 to 7.5
3.75 to 7.5	2	7.5 to 15
3.75 to 7.5	4	15 to 30

NOTE

Before attempting to tune or operate the equipment, the operator should familiarize himself with the functions and location of all meters, knobs, tuning dials, switches and pilot lights. Refer to Table 4-3.

2. OPERATIONAL FEATURES.

a. This transmitter is designed and constructed to give reliable performance where installation space is small and vibration, shock, salt spray and other adverse conditions exist, such as encountered on small patrol type vessels.

b. Provisions for external master oscillator operation have been incorporated to add flexibility to the equipment. For normal operation, however, one of the ten predetermined crystals is selected for operating at a particular frequency.

c. This transmitter is arranged for direct connection to the antenna lead-in. No transmission line or other coupling circuits are required. The antenna is connected to the ceramic bushing at the top center of the transmitter. Through the use of a transfer relay, the same antenna is used for a receiver to monitor communications.

d. A-1 operation for CW or A-3 emission for telephone transmission may be readily selected by the EMISSION switch. Provisions have been made for connecting a standard "six wire remote control" unit to terminal board TB101 which provides for starting, stopping, keying and phone transmission. This is accomplished when the LOCAL-REMOTE switch, at the transmitter, is in the REMOTE position.

e. Overall protection of the equipment against electrical surges, short-circuits and overloads is provided by overload relays and a bias failure relay. In addition, ac input line and primaries of the power transformers are fused. Indicating type fuses are clearly marked on the front panel with their ampere value and the circuits involved. Spare fuses for each of the different types used are found in the SPARE FUSES box located on the front panel of the Power Supply PP-950/URT-12. Protection of personnel against coming into contact with high voltage circuits is assured by the use of cabinet interlocks. The removal of any one chassis from the cabinet will deenergize the plate supply in the unit. The BATTLE SHORT switch is placed in the ON position to short out the interlocks in case of erratic operation or failure of the interlock switches due to excessive shock such as from gunfire.

3. CONTROLS.

a. Table 4-3 gives the location and function of each of the operating controls and indicators. These have been divided into groups corresponding to the approximate location and general control function. The five dial controls; I.P.A. TUNING, P.A. TUNING, COUPLING, ANTENNA VERNIER and ANTENNA TUNING are equipped with dial locks. Once the transmitter has been tuned these dials should be locked in position.

4. STARTING THE TRANSMITTER.

a. All of the switches, controls and indicators referred to in the following operating procedure are located on the front panel of the equipment. The sequence of operation is illustrated in Figures 4-3 and 4-4 which indicate a step-by-step procedure covered in the following paragraphs.

WARNING

DO NOT APPLY PLATE VOLTAGE UNTIL
CERTAIN THAT THE TRANSMITTER HAS
BEEN TUNED COMPLETELY.

TO START THE TRANSMITTER:

b. AUTOMATIC STARTING. -Automatic starting can be accomplished provided that the transmitter has been previously tuned.

TABLE 4-3 CONTROL AND INDICATOR LOCATION FUNCTION

CONTROL DESIGNATION	LOCATION	TYPE OF COMPONENT	SYMBOL	PURPOSE OF CONTROL
		POWER CONTROLS		
EMERGENCY-LINE	PP-950/URT-12 Front Panel	Toggle switch	S205	Controls 115 volts ac line ON or OFF.
Main Line START-STOP	PP-950/URT-12 Front Panel	Push button switch	S207	START button energizes K204, filaments, blower and control circuits. STOP button turns off transmitter.
FILament on Indicator, white	PP-950/URT-12 Front Panel	Incandescent lamp	I202	Indicates when filaments are on.
PLATE ON-OFF	PP-950/URT-12 Front Panel	Toggle switch	S206	In ON position, low and high voltage plate supplies are energized.
PLATE on Indicator, red	PP-950/URT-12 Front Panel	Incandescent lamp	I201	Indicates ON position of plate switch.
LOCAL-REMOTE	PP-950/URT-12 Front Panel	Rotary switch	S202	In LOCAL position, transmitter is controlled from front panel at the transmitter. In REMOTE position, transmitter may be operated from remote location.
ADJUST-TUNE-OPERATE	PP-950/URT-12 Front Panel	Rotary switch	S201	In ADJUST position, removes plate voltage from the power amplifier and modulator tubes, low voltage supply is on. In TUNE position, reduced plate voltage is applied while tuning. In OPERATE position, high voltage transformer is connected to give full plate voltage.
BATTLE SHORT ON-OFF	PP-950/URT-12 Front Panel	Toggle switch	S204	Normally operates in OFF position, placing cabinet interlock switches in circuit. In ON position, the cabinet interlock switches are shorted out.
BATTLE SHORT Indicator, clear	PP-950/URT-12 Front Panel	Neon lamp	I203	Indicates the ON position of the BATTLE SHORT switch or when interlocks are shorted.
		MODULATOR CONTROLS		
CARRIER ON Indicator, green	T-408/URT-12 Front Panel	Incandescent lamp	I301	Indicates transmitter is keyed.
P. A. GRID	T-408/URT-12 Front Panel	Milliammeter	M301	Indicates grid current to the power amplifier.
P. A. CATHODE	T-408/URT-12 Front Panel	Milliammeter	M302	Indicates loading to the power amplifier; used also to tune power amplifier.
MODulator CATHODE	T-408/URT-12 Front Panel	Milliammeter	M303	Indicates cathode current to modulators V305 and V306.
EMISSION A-1 A-3	T-408/URT-12 Front Panel	Rotary switch	S303	Selects desired type of emission. A-1 a carrier wave keyed normally for telegraph. A-3 a carrier wave amplitude-modulated for voice transmission.
TEST KEY ON-OFF MOM.-ON	T-408/URT-12 Front Panel	Toggle switch	S302	Keys the transmitter for tuning and test purposes. ON position-the carrier is locked on. OFF position-the carrier is off. MOM. ON position-key must be held in position to hold carrier on.
HEADSET LEVEL	T-408/URT-12 Front Panel	Potentiometer	R305	Sets the audio level to the earphones.
MODulation GAIN	T-408/URT-12 Front Panel	Potentiometer	R303	Adjusts the level of audio modulation.

TABLE 4-3 CONTROL AND INDICATOR LOCATION FUNCTION (CONT'D)

CONTROL DESIGNATION	LOCATION	TYPE OF COMPONENT	SYMBOL	PURPOSE OF CONTROL
		MODULATOR CONTROLS (CONT'D)		
LIMITER IN-OUT	T-408/URT-12 Front Panel	Toggle switch	S301	IN position - clips the peak of high level audio to prevent over-modulation, and allows high average modulation level. OUT position - limiter is not in operation.
KEY	T-408/URT-12 Front Panel	Jack	J301	Permits insertion of telegraph key for local A-1 operation.
HEADSET	T-408/URT-12 Front Panel	Jack	J302	Permits insertion of headset for receiving.
MICROPHONE	T-408/URT-12 Front Panel	Jack	J303	Permits insertion of microphone for local A-3 operation.
O.L. RESET	T-408/URT-12 Front Panel	Toggle switch	S304	Resets the modulator overload relay and the power amplifier overload relay.
		TRANSMITTER TUNING CONTROLS		
CRYSTAL SWITCH	T-408/URT-12 Front Panel	Rotary switch	S401	Selects proper crystal for desired frequency.
BAND SWITCH	T-408/URT-12 Front Panel	Rotary switch	S402	Selects the desired frequency band.
I.P.A. TUNING	T-408/URT-12 Front Panel	Variable capacitor	C422	Tunes the exciter to provide drive for power amplifier.
P.A. TUNING	T-408/URT-12 Front Panel	Variable capacitor	C452 C455	Tunes power amplifier stage. (C452 operates in the low frequency region and C455 operates in the high frequency region).
ANTENNA TAP	T-408/URT-12 Front Panel	Rotary switch	S406	When ANTENNA TAP switch is in the numbered position (when used in conjunction with the Antenna Vernier), it provides a second coupling control to allow matching of antenna to power amplifier. In SERIES "A" and SERIES "B" positions the ANTENNA TAP switch allows antenna to be series tuned with the ANTENNA VERNIER.
ANTENNA RANGE	T-408/URT-12 Front Panel	Rotary switch	S405	Selects the proper antenna tuning band.
COUPLING	T-408/URT-12 Front Panel	Variable capacitor	C456	Adjusts the coupling between the antenna and the power amplifier.
ANTENNA VERNIER	T-408/URT-12 Front Panel	Rotary inductor	L428	When ANTENNA TAP switch is in SERIES "A" or SERIES "B" position this ANTENNA VERNIER acts as a vernier for the ANTENNA RANGE switch to provide continuous tuning of the antenna When ANTENNA TAP switch is in the numbered position this ANTENNA VERNIER operates as a vernier for the ANTENNA RANGE switch to allow a continuous variation of antenna coupling for matching purposes.
ANTENNA TUNING	T-408/URT-12 Front Panel	Variable capacitor	C457	Tunes the antenna circuit when the ANTENNA TAP switch is in the numbered positions. When the ANTENNA TAP is in the SERIES "B" position the antenna tuning range is extended. In the SERIES "A" position this control has no effect.
RECEPTACLE	T-408/URT-12 Rear of chassis (See Fig. 7-)	R. F. Receptacle	J403	Provides cable connection for external Master Oscillator.

CAUTION

Use AUTOMATIC STARTING procedure only when certain that the transmitter has been previously tuned. Proceed to INITAL STARTING if previous tuning adjustments are not known.

Step A. Visually check and set front panel controls as follows:

CONTROL	POSITION
Local-Remote	Local
Emission	A-1
Adjust-Tune-Operate	Operate
Test Key	On
Emergency-Line	On
Plate	On

Step B. Visually check and set all tuning controls for the desired frequency in accordance with the TUNING CHART located on the front panel of the transmitter.

Step C. Push START (black) button and allow sufficient time (30 seconds) for warm-up before operation.

CAUTION

When the ANTENNA TAP switch is in either the SERIES A or SERIES B position proceed with Step D. When the ANTENNA TAP switch is in a numbered position omit Step D and proceed to Step E.

Step D. Adjust the ANTENNA VERNIER for maximum current reading on the P.A. CATHODE meter.

Step E. Adjust the ANTENNA TUNING control for maximum current reading on the P.A. CATHODE meter.

NOTE

The P.A. CATHODE meter should now read approximately 180 to 200 ma. If the above meter reading cannot be accomplished with either Step D or Step E, proceed to paragraph 4c, INTIAL STARTING for a complete step-by-step tuning procedure.

Step F. Place TEST KEY in OFF position. For A-1 emission insert telegraph key in KEY jack. For A-3 emission, place EMISSION selector switch to the A-3 position.

c. INITIAL STARTING. - Since this transmitter may be operated for continuous wave telegraph (A-1) and radio telephone (A-3) from either a local or a remote position, it must first be tuned for A-1 emission at the local position.

Step 1. Place LOCAL-REMOTE switch in LOCAL position.

Step 2. Place EMISSION switch to A-1.

Step 3. Place ADJUST-TUNE-OPERATE switch to the ADJUST position.

Step 4. Place TEST KEY to OFF position.

Step 5. Place PLATE switch in OFF position.

Step 6. Place EMERGENCY-LINE in the ON position.

Step 7. Push START button (black); this will trip a 30 second automatic time delay.

NOTE

When transmitter is not already tuned to desired frequency proceed with TUNING THE TRANSMITTER paragraph 5.

5. TUNING THE TRANSMITTER. - The transmitter may be tuned using the ten-channel crystal oscillator, or an external master oscillator as a fundamental frequency source. When using crystal control, a crystal of the proper frequency must be in the crystal socket for the desired channel. See Section 5, paragraph 3d.

Step 8. Rotate the CRYSTAL SWITCH to a crystal position which will give the desired output carrier frequency. Refer to Table 4-2, and paragraph 1b.

Step 9. Rotate the BAND SWITCH to the desired position as indicated in the Band Selection Chart, Table 4-1.

Step 10. Set I.P.A. TUNING control to the value indicated on the I P A Tuning Chart, Figure 4-1.

Step 11. Set P.A. TUNING control to the value indicated on the P A Tuning Chart, Figure 4-2.

Step 12. Rotate COUPLING dial to read 20.

Step 13. Set ANTENNA TAP switch to the TUNE position.

Step 14. Place PLATE switch in ON position.

Step 15. Place TEST KEY in ON position.

Step 16. Adjust the I.P.A. TUNING control for a reading of 15 ma on the P.A. GRID meter.

Step 17. Place ADJUST-TUNE-OPERATE switch in the TUNE position.

Step 18. Adjust the P.A. TUNING control for a minimum reading (dip) on the P.A. CATHODE meter.

Step 19. Rotate ANTENNA TUNING dial to zero.

Step 20. Crank the ANTENNA VERNIER control until the counter indicates "000".

Step 21. Move ANTENNA RANGE control to the 8B. position.

NOTE

Adjust, as necessary, the I.P.A. TUNING control to maintain 15 ma on the P.A. GRID meter.

6. LOADING AND MATCHING THE ANTENNA.

a. The antenna matching network in this transmitter is designed to resonate with antennas of broad characteristics, thereby making necessary a systematic antenna matching procedure.

(1) The SERIES A position of the ANTENNA TAP switch is used when matching a highly capacitive antenna.

(2) The SERIES B position of the ANTENNA TAP switch is used when matching a highly inductive antenna.

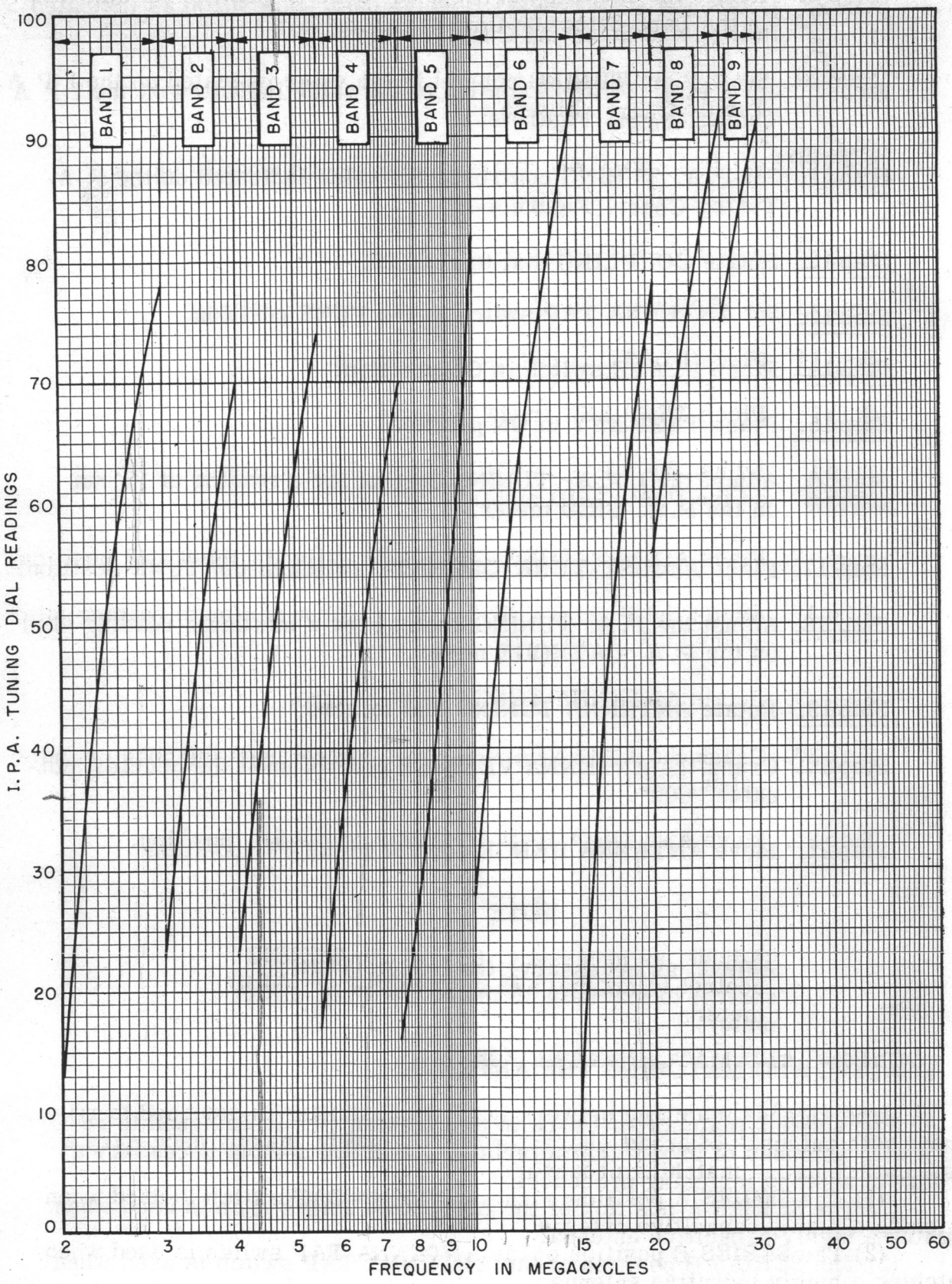

Figure 4-1. IPA Tuning Calibration (Typical)

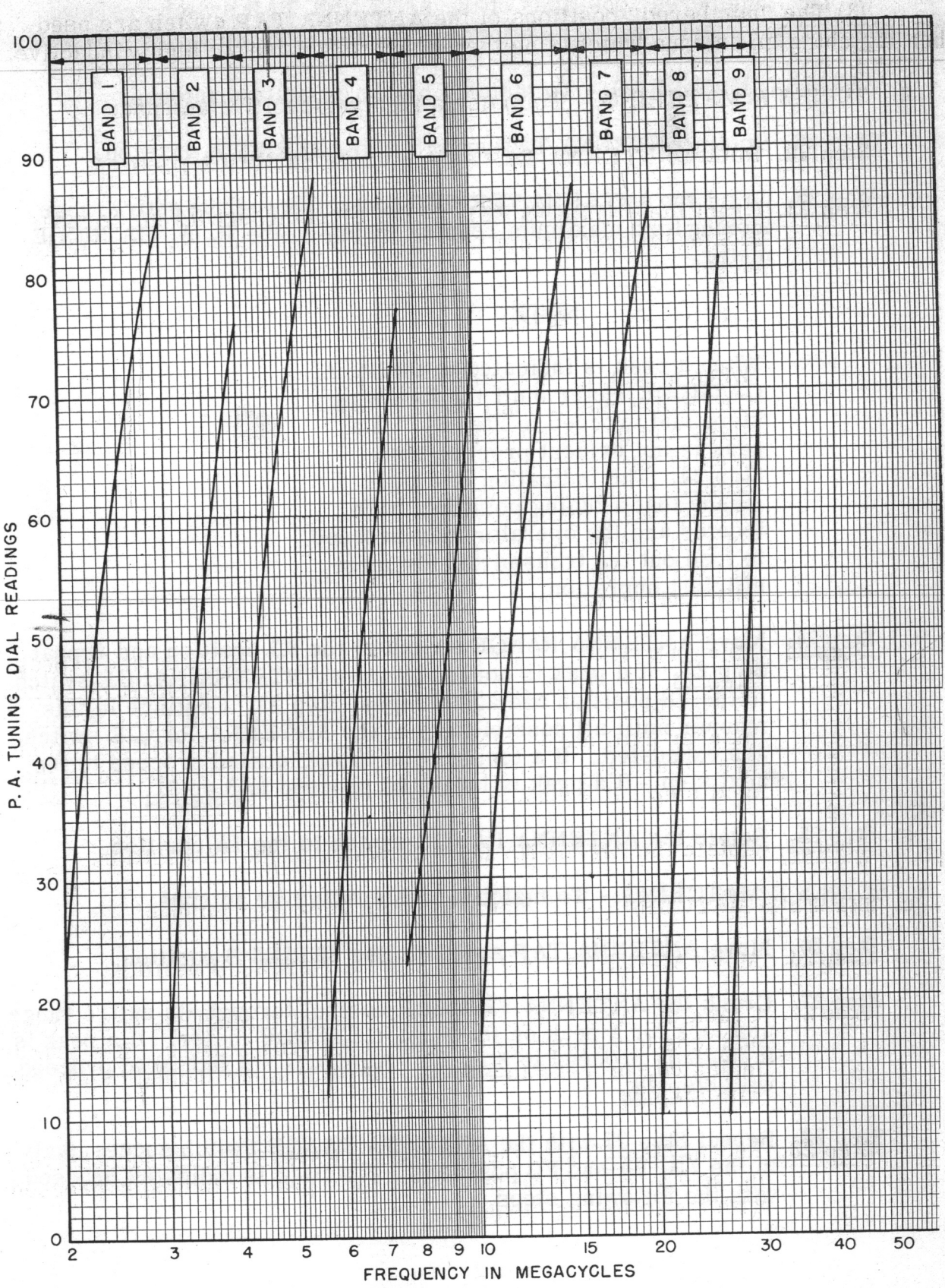

Figure 4-2. PA Tuning Calibration (Typical)

(3) The "numbered" positions of the ANTENNA TAP switch are used when matching an antenna which is neither highly capacitive nor highly inductive.

b. SERIES A MATCHING. - To match a highly capacitive antenna:

Step 22. Rotate ANTENNA TAP switch to the SERIES A position.

Step 23. Crank the ANTENNA VERNIER control through its entire range looking for a maximum reading (peak) on the P. A. CATHODE meter.

NOTE

When a peak is indicated in the P. A. CATHODE meter omit the following steps and proceed to Step 31. If a peak is not evident proceed with Step 24. The indication of a peak means that a tuning point has been located and the operator may proceed to load out the transmitter for most efficient operation.

Step 24. Move ANTENNA RANGE switch to the 8A position and repeat Step 23. If a peak is not found move ANTENNA RANGE switch to the 7B position and again repeat Step 23. Continue in this manner until all possibilities of the ANTENNA RANGE switch are exhausted. If a tuning point is not located proceed to the next step. If a peak is indicated proceed to Step 31.

Step 25. Rotate the ANTENNA RANGE switch to the 7A position.

c. SERIES B MATCHING. - To match a highly inductive antenna:

Step 26. Move ANTENNA TAP switch to the SERIES B position.

Step 27. Crank the ANTENNA VERNIER control through its entire range and look for a peak on the P.A. CATHODE meter. If a peak is indicated, proceed to Step 31. If peak is not indicated proceed with Step 28.

Step 28. Repeat Step 27 with the ANTENNA RANGE switch successively in the 7B, 8A and 8B positions. If a peak is indicated proceed with the following steps.

Step 29. Reset the ANTENNA RANGE switch to the 8B and the ANTENNA VERNIER control to "000".

Step 30. Carefully rotate the ANTENNA TUNING control for a peak on the P.A. CATHODE meter.

NOTE

The following conditions may be encountered when tuning with the ANTENNA TUNING control.

a. When a tuning point is indicated with the ANTENNA TUNING control set below 10, proceed to load out the transmitter in accordance with Step 31.

b. When a tuning point is indicated with control slightly above 10, proceed to Step 35 to complete the tuning procedure.

c. If a tuning point is not indicated proceed to Step 38.

Step 31. Increase or decrease the COUPLING control until the P.A. CATHODE meter reads approximately 115 ma.

Step 32. Readjust the ANTENNA VERNIER control for a peak in the P.A. CATHODE meter.

Step 33. Note the reading on the P.A. CATHODE meter. Adjust the P.A. TUNING control for a dip on the P.A. CATHODE meter and note the reading. Retune the P.A. TUNING control until the P.A. CATHODE meter reads approximately halfway between the two above readings.

Step 34. Adjust ANTENNA VERNIER for a peak on the P.A. CATHODE meter.

Step 35. Place the ADJUST-TUNE-OPERATE switch to the OPERATE position.

NOTE

Check that P. A. GRID meter reads 15 ma and readjust if necessary.

Step 36. Adjust I.P.A. TUNING control (if necessary) to maintain 15 ma on the P.A. GRID meter.

Step 37. Increase or decrease COUPLING control until the P.A. CATHODE meter reads approximately 190 ma.

The transmitter is now ready for service operation of A-1(CW) emission. Lock all tuning controls, and record all dial settings on the TUNING CHART for future reference. Place TEST KEY in OFF position and insert telegraph key in KEY jack.

Step 38. If a peak is not indicated upon the completion of Step 30. move the ANTENNA RANGE switch to a position selected from Table 4-4, Recommended Initial ANTENNA RANGE Positions.

TABLE 4-4. RECOMMENDED INITIAL ANTENNA RANGE POSITION

Conditions:

1. Use this table as a starting point only.
2. The ANTENNA RANGE position may vary from those values given in this table due to the characteristic of the antenna in use.
3. This table is used only when the ANTENNA TAP switch is in the numbered positions.

RANGE OF FREQUENCIES IN Mc	ANTENNA RANGE switch POSITION
-	1
2 to 3	2
3 to 4	3
4 to 7	4
7 to 10	5
10 to 15	6
15 to 20	7A
20 to 24	7B
24 to 28	8A
28 to 30	8B

d. "NUMBERED" MATCHING POSITIONS. - To match an antenna which is neither highly inductive nor highly capacitive:

Step 39. Rotate COUPLING control to 70.

Step 40. Rotate the ANTENNA TAP switch to the TUNE position.

Step 41. Adjust the P.A. TUNING control for a dip on the P.A. CATHODE meter.

Step 42. Crank the ANTENNA VERNIER to "000" on the counter.

Step 43. Move ANTENNA TAP switch to the number 1 position.

Step 44. Rotate ANTENNA TUNING control looking for a peak on the P. A. CATHODE meter. When a peak is indicated omit the following steps and proceed to Step 47. If a peak is not indicated continue with Step 45.

CAUTION

Never increase the ANTENNA TAP switch beyond a point where the sum of the ANTENNA RANGE switch position number and the ANTENNA TAP switch position number exceeds NINE (9).

Step 45. Find a tuning point as follows:

(a) Move the ANTENNA TAP to the number 2 position and repeat Step 44.

(b) Move the ANTENNA TAP to the number 3 position and repeat Step 44. Continue in this manner without violating the "NINE (9)" rule. If a peak is not indicated continue with the following steps.

(c) Repeat Step 45 (b) above for each position of the ANTENNA RANGE switch. Start first by moving the ANTENNA RANGE switch one position higher and one position lower from the initial point. If a peak is not found continue by moving two positions above and below the initial point.

Step 46. When the tuning point has been found with the procedure outlined in Step 45 decrease the ANTENNA TAP switch one position and repeat Step 44. If a peak is not in dicated move the ANTENNA TAP switch back to its original peak position.

Step 47. If the peak point occurs at less than approximately 115 ma on P. A. CATHODE meter, complete procedure of part (a) below. If this peak is at greater than approximately 115 ma, proceed to part (b) of this step.

(a) Increase the COUPLING control slightly until 115 ma (plus or minus 2 ma) is obtained on the P. A. CATHODE meter. If this condition is not achieved, rotate the ANTENNA VERNIER "upscale" until the 115 ma point is obtained. Adjust the ANTENNA TUNING control to indicate a peak on the P. A. CATHODE meter. Increase or decrease the ANTENNA VERNIER or COUPLING control, whi ch ever has the greater effect, until the required 115 ma is obtained. Keep in mind that the ANTENNA TUNING control should indicate a peak. Once this is accomplished omit the following and proceed to Step 49.

b. Decrease the COUPLING control to obtain 115 ma (plus or minus 2 ma) on the P.A. CATHODE meter, keeping the ANTENNA TUNING control tuned to indicate a peak. Continue decreasing the COUPLING control and peaking with the ANTENNA TUNING control until the required 115 ma is obtained.

NOTE

Do not decrease the COUPLING control below 60 on the dial. If the tuning point of 115 ma cannot be achieved with COUPLING control set at 60 or above proceed to Step 48.

Step 48. Crank the ANTENNA VERNIER, through its range observing the P.A. CATHODE meter. It will go through the peak point and back down until it reads the required 115 ma. Check that the ANTENNA TUNING control will indicate a peak at the same point.

Step 49. Decrease the ANTENNA TAP switch one position, increase the ANTENNA RANGE switch one position and repeat Step 44. If the ANTENNA TUNING control still peaks at zero proceed to Step 50. If the tuning is not at zero proceed, to Step 51.

Step 50. Increase the ANTENNA TAP one position, decrease the ANTENNA RANGE one position and repeat Step 44. Once the tuning conditions are satisfied proceed with Step 51, to complete the tuning procedure.

Step 51. Note the reading on the P.A. CATHODE meter. Adjust the P.A. TUNING control for a dip on the meter and note this reading. Retune the P.A. TUNING control until the meter reads approximately half-way between the two readings.

Step 52. Place the ADJUST-TUNE-OPERATE switch in the OPERATE position.

NOTE

The P. A. CATHODE meter should now read approximately 190 ma.

Step 53. Adjust the COUPLING control or the ANTENNA VERNIER control for a reading of 190 ma on the P. A. CATHODE meter. Always check that the ANTENNA TUNING control indicates a peak.

Step 54. Tighten all tuning control locks and record all dial readings on the TUNING CHART for future reference. Place TEST KEY in OFF position and insert telegraph key in KEY jack.

The transmitter is now ready for service operation on A-1 emission.

7. PHONE OPERATION (A-3).

a. In order to operate this equipment on A-3, first set up the transmitter for service operation on A-1 emission.

(1) Start the transmitter in accordance with paragraph 4.

(2) Tune the transmitter in accordance with paragraphs 5 and 6.

b. Place EMISSION switch to the A-3 position and check that the TEST KEY is in the OFF position.

c. Rotate the MODULATOR GAIN control to number 5. This is a starting point only. Increase or decrease this control to adjust for background noise and speaking level.

d. Place the LIMITER switch to the IN position.

NOTE

Under normal operating condition the LIMITER is used IN position to provide a high output level without overmodulating the transmitter.

e. Insert microphone and press the push-to-talk button.

The transmitter is now ready for service operation on phone transmission (A-3).

8. EXTERNAL MASTER OSCILLATOR OPERATION.

The transmitter may be operated on any frequency in the range using an external Master Oscillator having an output of 1.0 v in the frequency range of 2 to 7.5 Mc.

a. For external M.O. operation proceed as follows:

Step 1. Connect the external M.O. cable to receptacle J403 which is mounted on rear of cabinet CY-1369/URT-12.

Step 2. Set the CRYSTAL SELECTOR switch to position 11.

Step 3. Start the transmitter in accordance with paragraph 4

Step 4. Tune the transmitter in accordance with paragraphs 5 and 6.

9. REMOTE OPERATION.

Radio Transmitting Set AN/URT-12 provides for remote operation from a standard "six wire remote" unit. When such a control unit is installed and it is desired to control the transmitter at the remote point proceed as follows:

AT THE TRANSMITTER:

Step 1. Set up the transmitter for service operation.
a. Start the transmitter in accordance with paragraph 4.
b. Tune the transmitter channel in accordance with paragraphs 5 and 6.

Step 2. Place the LOCAL-REMOTE switch to the REMOTE position.

Step 3. Place LIMITER IN or OUT as desired.

Step 4. Place EMISSION switch to the desired emission (A-1 or A-3).

Step 5. Push STOP button on the START-STOP control.

AT THE REMOTE LOCATION:

Step 6. Push START button on the START-STOP control. The light indicator will glow indicating that the transmitter is in service operation for either A-1 or A-3 emission as required for operation from the remote location.

10. STOPPING THE TRANSMITTER

Three types of shut-down may be necessary; emergency, standby or complete shut-down.

a. EMERGENCY SHUT-DOWN.
In case of an accident to personnel or equipment.
Step 1. Place EMERGENCY-LINE switch in OFF position. This removes all power from the transmitter and all pilot lights will go out.
Before reenergizing the transmitter, place PLATE switch in OFF position. Rotate ADJUST-TUNE-OPERATE switch to the ADJUST position, then start transmitter in accordance with paragraphs 4, 5 and 6.

b. STANDBY SHUT-DOWN.
When the transmitter is not in active use but it is desired to keep it in readiness for operation or when minor repairs or adjustments are to be made, proceed as follows:

Step 1. Push STOP (red) button. This will remove plate and filament power. All pilot lights will go out. To bring the transmitter back in service operation: push START (black) button. This will restore power to all stages. The equipment will be ready for operation without any other adjustments.

c. COMPLETE SHUT-DOWN.

When the transmitter is to be idle for several days or repairs are necessary involving considerable time or the removal of units of the transmitter, make a complete shut-down as follows:

Step 1. Place PLATE switch in OFF position.

Step 2. Place EMERGENCY-LINE switch in OFF position. All indicator lights will go out. This removes all power from the transmitter.

11. SUMMARIZED OPERATING PROCEDURE.

The summerized procedure covers placing the transmitter in service operation after it has been properly set up, tuned and adjusted on the required frequency band.

TO START THE TRANSMITTER:

Step A. Set the following controls to their corresponding positions:

LOCAL-REMOTE	LOCAL
EMISSION	A-1
ADJUST-TUNE-OPERATE	TUNE
TEST KEY	ON
EMERGENCY-LINE	ON
PLATE	ON
START-STOP	Push START

Step B. Select desired CRYSTAL frequency and corresponding BAND SWITCH position.

Step C. Set all tuning controls to values indicated on the TUNING CHART on the front panel.

NOTE

(1) When ANTENNA TAP Switch is in either SERIES position complete Steps D and E.

(2) When ANTENNA TAP Switch is in the "numbered" position complete Steps F and G.

Step D. Adjust for maximum P. A. CATHODE current (approximately 115 ma) using ANTENNA VERNIER.

Step E. Place ADJUST-TUNE-OPERATE switch to the OPERATE position. Note P. A. CATHODE current. If it is not 190 ma, place ADJUST-TUNE-OPERATE switch to TUNE, increase COUPLING control and repeat Step D. If 190 ma is still not obtained after COUPLING control has been increased proceed to paragraphs 5 and 6 for complete tuning procedure.
The transmitter is now ready for A-1 communication. For A-3 communication, place EMISSION switch in A-3 position.

Step F. Rotate ANTENNA TUNING control for a peak on the P. A. CATHODE meter.

Step G. Place ADJUST-TUNE-OPERATE switch to the OPERATE position. If P. A. CATHODE meter does not read approximately 190 ma, complete the procedure outlined in paragraphs 5 and 6.
The transmitter is now ready for A-1 communication. For A-3 communication, place EMISSION switch in A-3 position.

12. OPERATING DATA.

a. TRANSMITTER FREQUENCY MONITORING.

The transmitter signal is best monitored by picking it up on a receiver. An accurately calibrated receiver will indicate that the signal is on the proper frequency, has good quality and is being keyed properly. Accurate measurement of frequency must, of course, be made with a reliable frequency standard.

b. TYPICAL OPERATING DATA.

Table 4-5 shows typical dial readings for the transmitter when set up for various output frequencies. These readings should not be used in actual tune-up of a transmitter when readings are available on the TUNING CHART. In addition the Output Matching, Coupling and Tuning readings are based on the use of a 75 ohm dummy antenna and should only be used as a rough check when a similar antenna is used.
Table 4-6 gives typical meter readings for various conditions of operation of the transmitter.

TABLE 4-5 TYPICAL DIAL SETTINGS

CARRIER FREQ. Kc.	CRYSTAL FREQ. Kc.	BAND SWITCH	I.P.A. TUNING	P.A. TUNING	ANTENNA RANGE	ANTENNA TAP	COUPLING	ANTENNA VERNIER	ANTENNA TUNING	ANTENNA* REACTANCE
2000	2000	1	27.5	23	2	4	67	053	0	+ 2
3000	3000	2	15	18	3	5	72	131	40	+ 2
4000	4000	2	65	75	4	4	85	000	58	+ 2.7
5500	5500	3	72	87	6	3	74	043	8	+ 3.5
5583	5583	3	74	89	6	3	76	042	13	+ 3.5
7500	7500	4	70	67	6	3	78	009	70	+ 5.6
		4								
10000	5000	5	81	76	7A	2	74	078	40	+ 5.5
10150	5075	5	82	78.5	7A	2	75	079	39	+ 5.5
15000	7500	6	95	86	7A	2	70	025	95	+ 8
15230	7615	6	97	88	7A	2	71	025	97	+ 8
20000	5000	7	84.5	84	7B	2	78	060	76	+ 5
20300	5075	7	86	86	7B	2	88	062	76	+ 5
26000	6500	8	92	82	8A	1	70	122	50	- 7.7
26390	6597.5	8	94	85	8A	1	70	125	51	- 7.7
26000	6500	9	76	15	8A	1	65	136	48	- 7.7
30000	7500	9	91	59	8A	1	70	151	56	-16.6

* INDUCTANCE: Plus (+)
CAPACITANCE: Minus (-)

TABLE 4-6 TYPICAL METER READINGS

OPERATING CONDITIONS	P. A. GRID	P. A. CATHODE	MOD. CATHODE
A-1	15-18 ma	180-200 ma	30 ma
A-3 (without modulation)	15-18 ma	180-200 ma	30 ma
A-3 (with modulation)	15-18 ma	180-200 ma	175 ma

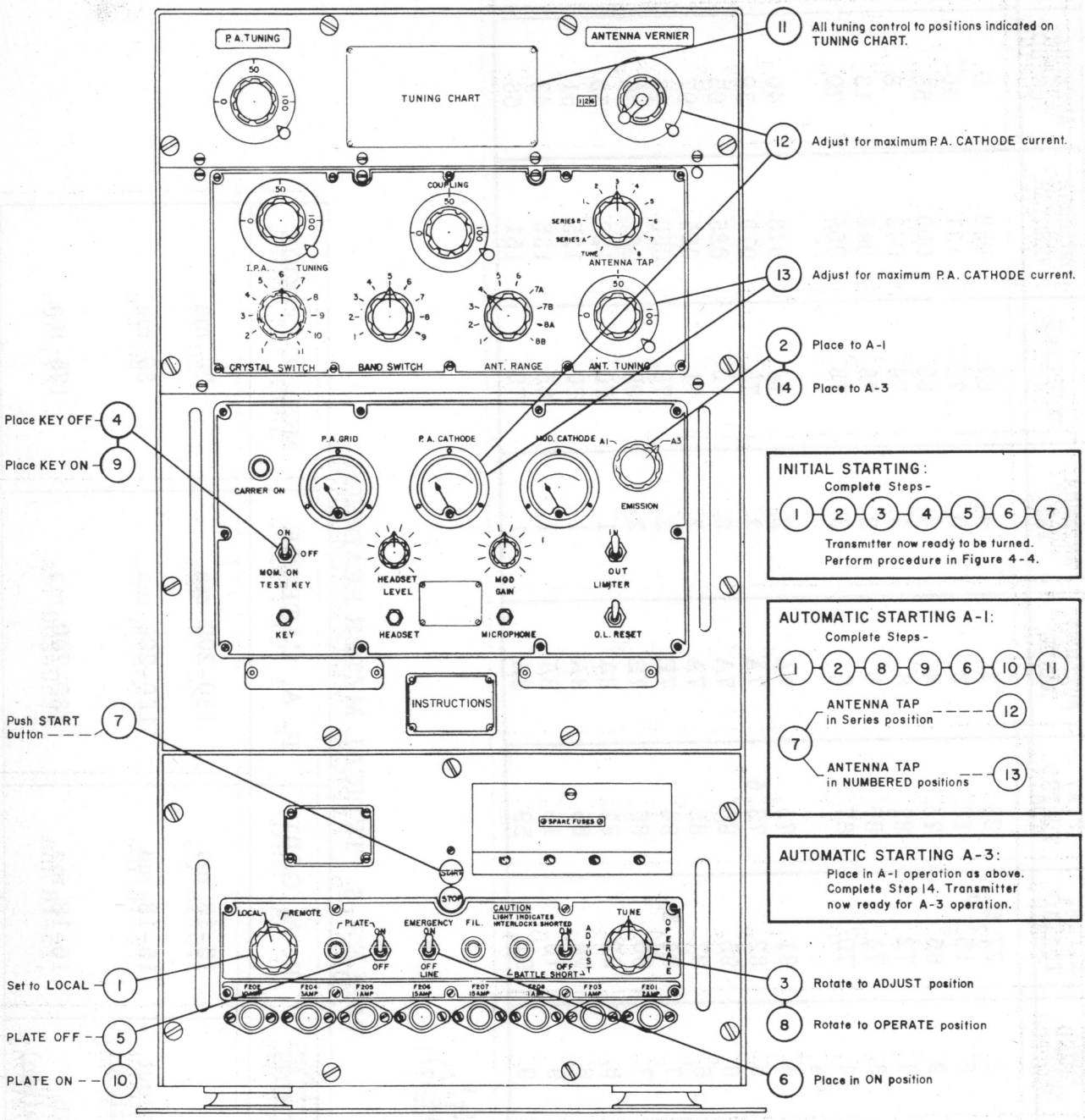

Figure 4-3. Starting the Transmitter

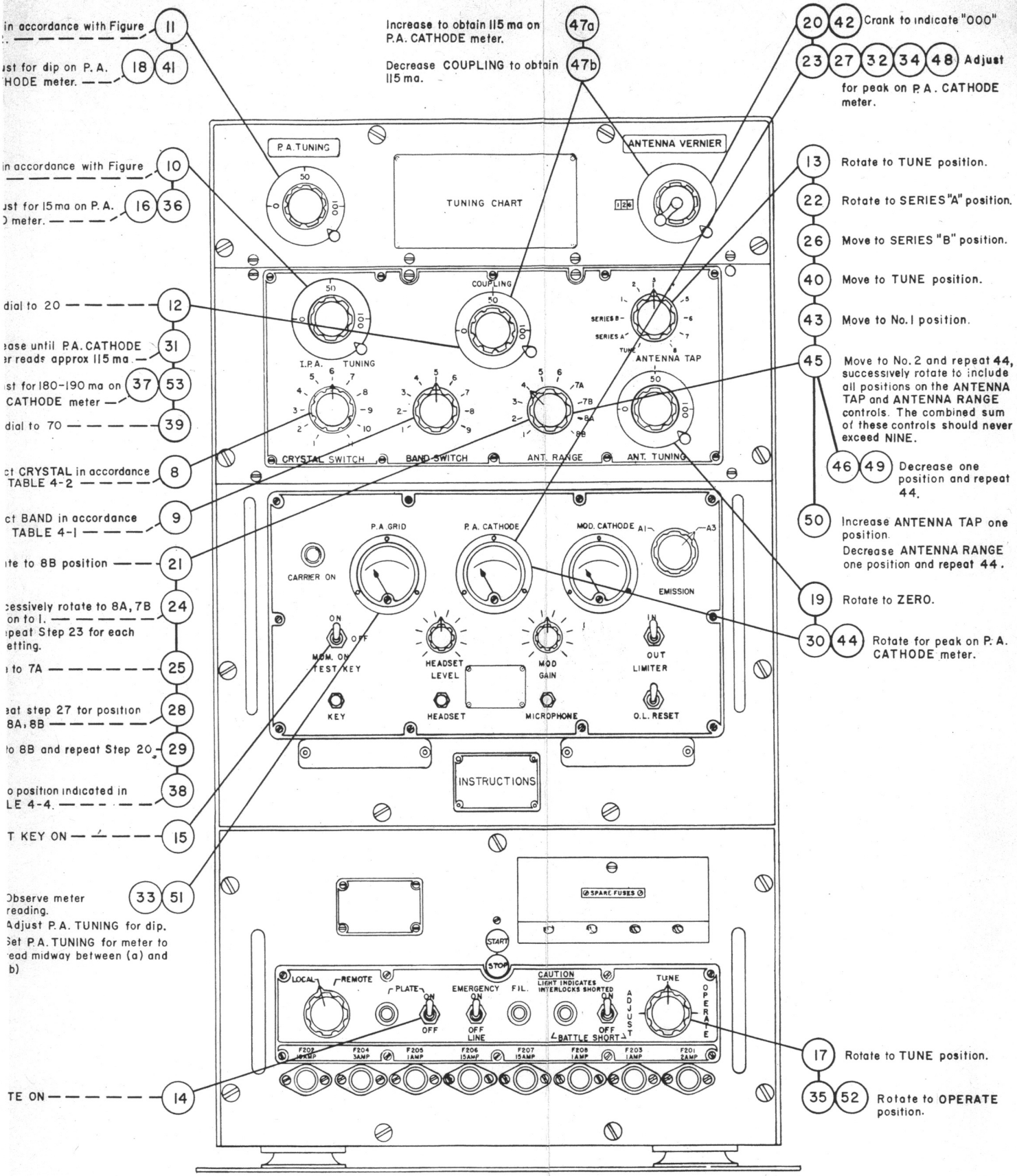

Figure 4-4. Tuning the Transmitter

E TRANSMITTER

COMPLETE STEPS: 31 32 33 34 35 36 37

Lock all controls and record readings.
Transmitter now ready for A-1 operation.

for A-3 operation → Place EMISSION SWITCH to A-3

COMPLETE STEPS: 35 36 37

Lock all controls and record readings.
Transmitter now ready for A-1 operation.

for A-3 operation

ak is
dicated

COMPLETE STEPS: (a) or (b) as per conditions.

47
- (a) peaking point less than 115 ma.
- (b) peaking point greater than 115 ma.
- If a peak is found with COUPLING control set at 60 or over proceed to 48

peak is indicated

COMPLETE STEP: 49

NA TUNING
ing point is found.

ANTENNA TUNING
above ZERO.

for A-3 operation → Place EMISSION SWITCH to A-3

Set in accordance with Figure 4-2. — 11

Adjust for dip on P.A. CATHODE meter. — 18 41

Set in accordance with Figure 4-1. — 10

Adjust for 15 ma on P.A. GRID meter. — 16 36

Set dial to 20 — 12

Increase until P.A. CATHODE meter reads approx 115 ma. — 31

Adjust for 180-190 ma on P.A. CATHODE meter — 37 53

Set dial to 70 — 39

Select CRYSTAL in accordance with TABLE 4-2 — 8

Select BAND in accordance with TABLE 4-1 — 9

Rotate to 8B position — 21

Successively rotate to 8A, 7B and on to 1. — 24
Repeat Step 23 for each setting.

Move to 7A — 25

Repeat step 27 for position 7B, 8A, 8B — 28

Set to 8B and repeat Step 20 — 29

Set to position indicated in TABLE 4-4. — 38

TEST KEY ON — 15

(a) Observe meter reading. 33 51
(b) Adjust P.A. TUNING for dip.
(c) Set P.A. TUNING for meter to read midway between (a) and (b)

PLATE ON — 14

Increase to obtain 115 m
P.A. CATHODE meter.

Decrease COUPLING t
115 ma.

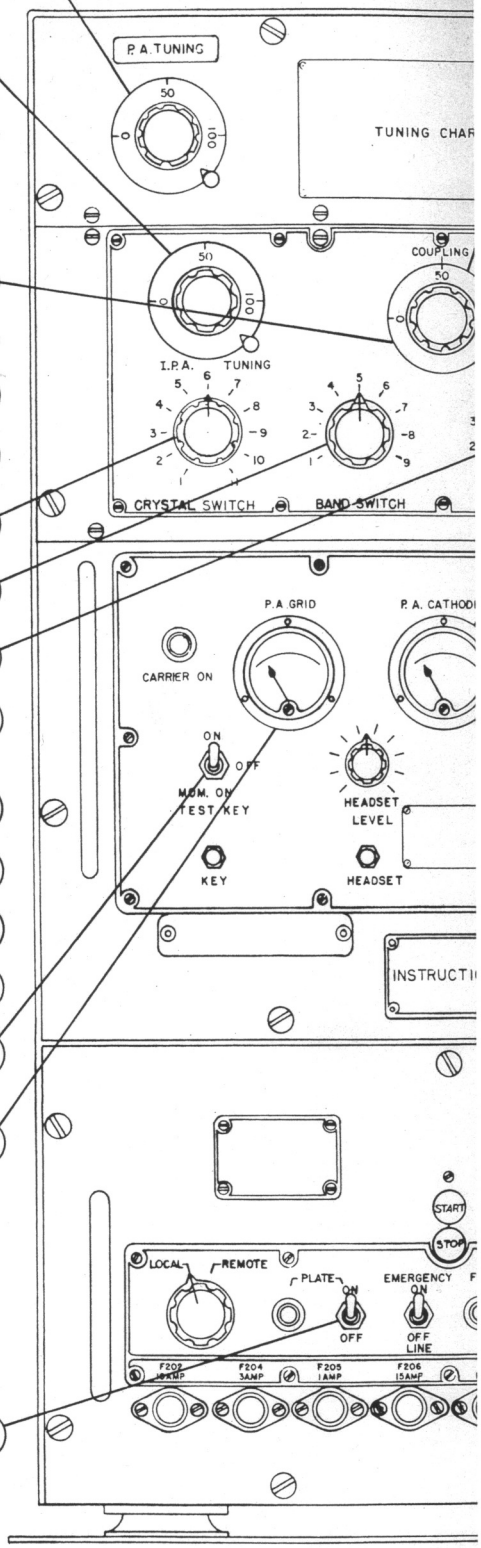

Figure 4-4. Tuni

TUNING THE TRANSMITTER

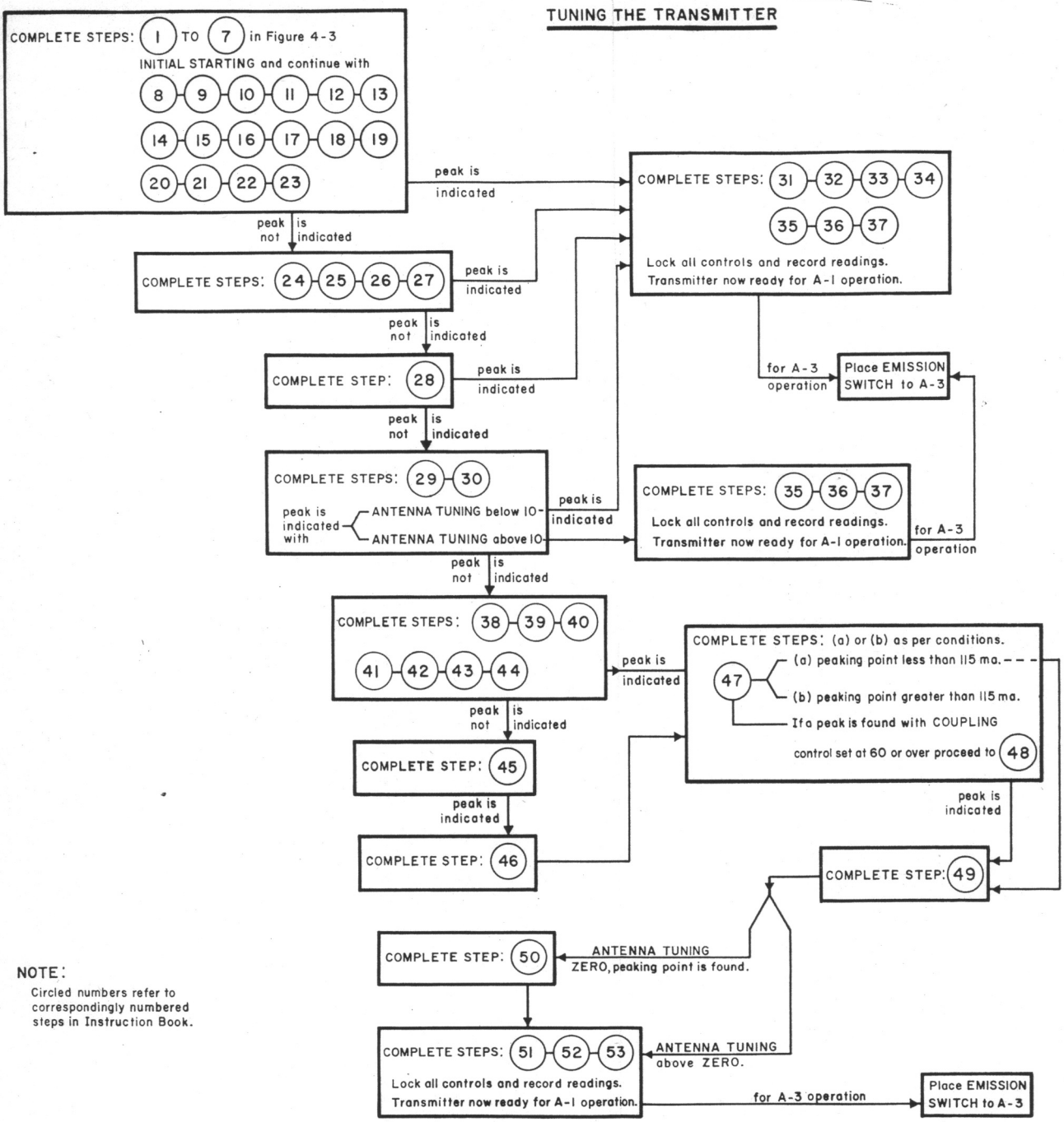

NOTE:

Circled numbers refer to correspondingly numbered steps in Instruction Book.

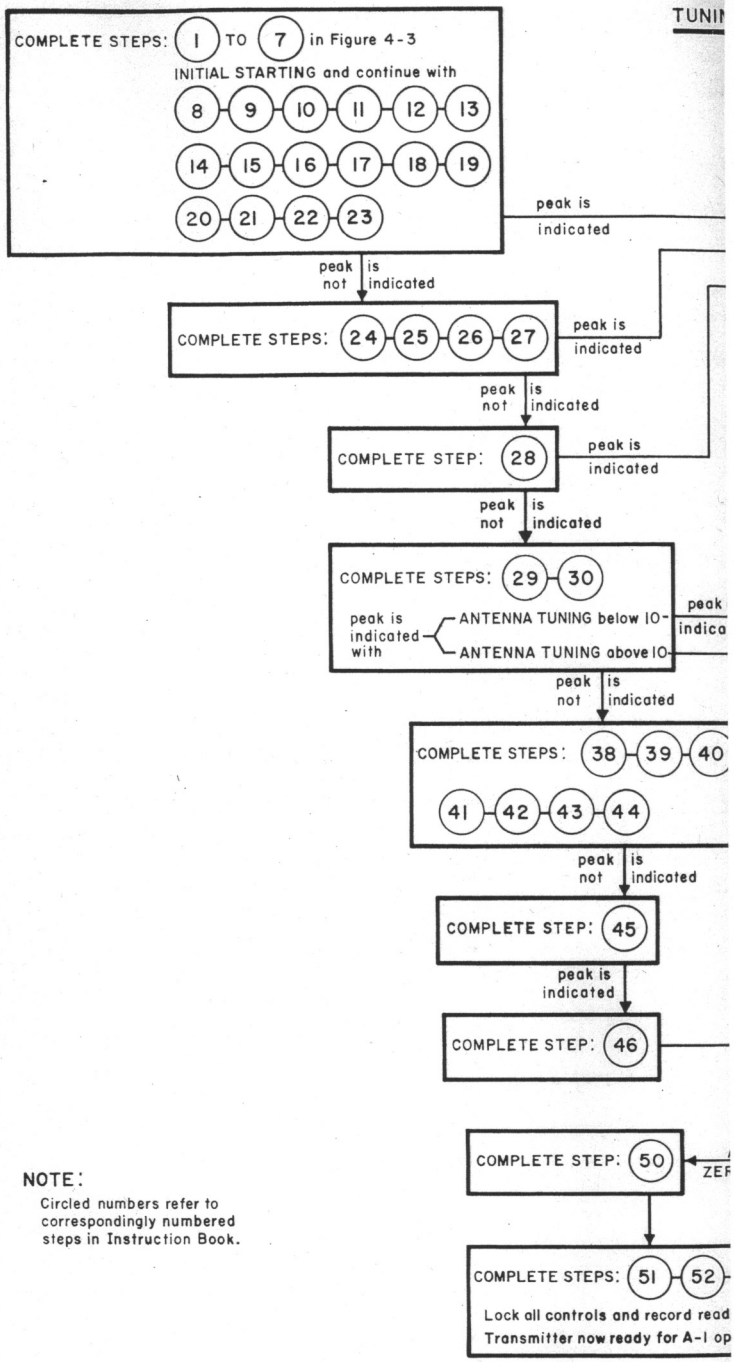
TUNI
COMPLETE STEPS: 1 TO 7 in Figure 4-3
INITIAL STARTING and continue with
8 9 10 11 12 13
14 15 16 17 18 19
20 21 22 23
peak is indicated
peak not is indicated
COMPLETE STEPS: 24 25 26 27
peak is indicated
peak not is indicated
COMPLETE STEP: 28
peak is indicated
peak not is indicated
COMPLETE STEPS: 29 30
peak is indicated with
ANTENNA TUNING below 10
ANTENNA TUNING above 10
peak indica
peak not is indicated
COMPLETE STEPS: 38 39 40
41 42 43 44
peak not is indicated
COMPLETE STEP: 45
peak is indicated
COMPLETE STEP: 46
COMPLETE STEP: 50
ZER
COMPLETE STEPS: 51 52
Lock all controls and record read
Transmitter now ready for A-1 op
NOTE:
Circled numbers refer to correspondingly numbered steps in Instruction Book.

SECTION 5

OPERATOR'S MAINTENANCE

1. INTRODUCTION

In order to maintain the equipment at peak performance, it will be necessary that the operator perform routine checks during each watch when he is responsible for the operation of the equipment. During operation the transmitter may develop minor defects which can be rectified without difficulty by the operator. Correction of these minor troubles at once may prevent the occurrence of major troubles at a later date. The operator should become sufficiently familiar with the technical details of the equipment to service minor defects that may develop when trained technical aid is not available.

2. OPERATOR'S CHECK CHART

Table 5-1 gives the routine for the operator to follow in making the necessary checks on the equipment during each watch.

3. EMERGENCY MAINTENANCE

NOTICE TO OPERATORS

OPERATORS SHALL NOT PERFORM ANY OF THE FOLLOWING EMERGENCY MAINTENANCE PROCEDURES WITHOUT PROPER AUTHORIZATION

a. REPLACMENT OF FUSES: All the power circuits are controlled with instantaneous operating type fuses. Table 5-2 shows location of fuses and Table 5-3 gives symptoms of fuse failure.

CAUTION

Never replace a fuse with one of higher rating unless continued operation of the equipment is more important than probable damage. If a fuse burns out immediately after replacement, do not replace it a second time until the cause has been corrected.

TO REPLACE A FUSE PROCEED AS FOLLOWS:

(1) Turn the cap of the fuse holder counterclockwise until it releases, and pull the cap with fuse out of the holder.

TABLE 5-1 ROUTINE CHECK CHART

WHAT TO CHECK	HOW TO CHECK	PRECAUTION
TRANSMITTER IN OPERATION_EACH WATCH		
1. Information from previous operator or communication officer.	a. Review log-book from previous watch.	a. Note changes in operation schedule during watch.
2. Observe all meters.	a. Record all meter readings. b. Compare with previous readings.	a. Notice abnormal readings. b. Investigate abnormal readings.
3. Check indicators.	a. Observe interlock indicators (BATTLESHORT) b. Observe power indicators (PLATE and FILAMENT)	a. Replace defective lamp.
4. RF output.	a. Check loading and power output of transmitter. b. Check frequency by frequency standards or communication receiver.	a. Check meter readings. b. Frequency should not drift.
5. Character of emission.	a. A1-Check keying by listening on receiver. b. A3-Voice-Check quality of emission by listening on receiver.	a. Keying should be clean, without lilt. b. Emission should be clear, not over modulated.

TABLE 5-1 ROUTINE CHECK CHART (CONT'D)

WHAT TO CHECK	HOW TO CHECK	PRECAUTION
TRANSMITTER ON STANDBY_EACH WATCH		
1. Information from previous operator or communication officer.	a. Review log-book from previous watch. b. Review and/or record verbal instructions.	a. Note change in operation schedule during watch.
2. Control circuit operation.	a. Check EMERGENCY_LINE switch by switching it ON and OFF. b. Check operation of remote unit (if one is used) by placing LOCAL_REMOTE to REMOTE position and operate remote controls.	a. Report any inoperative circuits or loose control. b. Note that time delay relays operate and that power circuit indicators light. c. Report any unsatisfactory circuit operation.
3. Transmitter operation.	a. Place in operate, and check all preset channels for proper tuning and loading. b. Check meter readings under load for each channel. c. Check output on A1 or A3 emission.	a. Observe all phases of operation to determine deficiencies or inoperative features.
4. Clean equipment.	4. Using a lint-free cloth, remove any dust from outside of cabinet and controls.	4. Do not disturb control settings.

TABLE 5-2. FUSE LOCATION

SYMBOL	LOCATION	PROTECTS	AMPS	VOLTS	STANDARD NAVY STOCK NUMBER
F201	Power Supply PP-950/URT-12, front panel	Filament supply	2	250	17-F-17411
F202	Power Supply PP-950/URT-12, front panel	High voltage plate	10	250	17-F-17419
F203	Power Supply PP-950/URT-12, front panel	Rectifier filament supply	~~1~~ 2	250	~~17-F-17410~~ 17-F-17411
F204	Power Supply PP-950/URT-12, front panel	Low voltage plate	3	250	17-F-174~~12~~
F205	Power Supply PP-950/URT-12, front panel	115v control circuit	1	250	17-F-17410
F206	Power Supply PP-950/URT-12, front panel	Line	15	250	17-F-17424
F207	Power Supply PP-950/URT-12, front panel	Line	15	250	17-F-17424
F208	Power Supply PP-950/URT-12, front panel	Auxiliary control circuit	1	250	17-F-17410
F209	Compartment for SPARE FUSES front panel	Spare for F202			
F210	Compartment for SPARE FUSES front panel	Spare for F204			
F211	Compartment for SPARE FUSES front panel	Spare for F205			
F212	Compartment for SPARE FUSES front panel	Spare for F206			
F213	Compartment for SPARE FUSES front panel	Spare for F207			
F214	Compartment for SPARE FUSES front panel	Spare for F201			
F215	Compartment for SPARE FUSES front panel	Spare for F203			
F216	Compartment for SPARE FUSES front panel	Spare for F208			

TABLE 5-3. SYMPTOMS OF FUSE FAILURE

SYMPTOM	BLOWN FUSE
Blown fuse condition is indicated by red pin extending from fuse	
FILAMENT indicator (I202) is out, breaks filament supply current	F201
PLATE indicator (I201) is out, breaks plate supply circuit	F202
No meter reading on P. A. GRID current meter	F203 F204
All front panel indicators are out	F205 F206 F207
No voltage on terminals 18 and 19 of TB102	F208

(2) Remove the defective fuse from the cap.

(3) Replace the fuse with another of the same rating having the red indicating pin visible through the cap. Tighten the cap in the holder by turning clockwise.

b. REPLACEMENT OF INDICATOR LAMPS: Location and types of indicator lamps are shown in Table 5-4. All lamps are of the bayonet base type.

TO REPLACE FRONT PANEL LAMPS:

(1) Remove the lens by grasping the knurled portion and turning counterclockwise.

(2) Press the lamp inward and turn counterclockwise; then pull the lamp out.

(3) Press the new lamp inward and turn clockwise.

(4) Replace the lens.

c. REPLACEMENT OF VACUUM TUBES: Vacuum tubes should give many hours of trouble-free service. Failure of the filament of a tube can usually be noted visually. Other failures may be observable through noting improper meter readings or noise or unsatisfactory quality of monitored signals. When replacing tubes, consult Table 1-4 for location and type.

WARNING

ALLOW TUBES TO COOL BEFORE HANDLING. IF IMMEDIATE REPLACEMENT IS REQUIRED, USE AN ASBESTOS GLOVE AND HANDLE CAREFULLY.

(1) To replace any of the electron tubes, it is first necessary to withdraw the units from the cabinet.

WARNING

THE EMERGENCY-LINE SWITCH MUST BE IN THE OFF POSITION BEFORE THE UNITS ARE WITHDRAWN FROM THE CABINET. THIS IS IS IN ORDER TO PREVENT THE OPERATOR FROM COMING IN CONTACT WITH VOLTAGES INSIDE THE EQUIPMENT WHICH MIGHT CAUSE SERIOUS INJURY.

(a) Loosen the thumbscrew around the edges of the front panel.

(b) Grasping the handles on the front panel, pull forward carefully until the chassis rolls outward and the stops engage.

(2) Miniature tubes are equipped with shields which also act as tube clamps. When replacing a tube of this type proceed as follows:

TABLE 5-4. REPLACEMENT OF INDICATOR LAMPS

FRONT PANEL MARKING	LOCATION	SYMBOL	MANUFACTURER'S TYPE	STANDARD NAVY STOCK NUMBER
PLATE	Power Supply PP-950/URT-12, front panel lower left	I201	Mazda No. 44	17-L-6305
FILament	Power Supply PP-950/URT-12, front panel lower center	I202	Mazda No. 44	17-L-6305
BATTLE SHORT	Power Supply PP-950/URT-12, front panel lower right of center	I203	GE No. NE-51	17-L-6806-130
CARRIER ON	Radio Transmitter T-408/URT-12, front panel	I301	Mazda No. 44	17-L-6305

(a) Remove the tube shield, turning it approximately 45 degrees counterclockwise until the bayonet pin releases.

(b) Grasp the glass bulb of the tube and pull it from the socket, rocking it very gently in order to release the prongs.

(c) Orient the new tube so that it will slide into the socket properly, then press it down firmly.

(d) Replace the tube shield, holding it down and turning about 45 degrees clockwise to lock.

(3) When removing tubes having medium bases such as type807 (V404) or H.V. rectifier tubes, type 3B28 (V203, V204) proceed as follows:

(a) Remove plate cap located on top of tube.

(b) Release snap clip at base of tube.

(c) Grasp the glass bulb of the tube and pull it from the socket, rocking it very gently in order to release the prongs.

(d) Orient the new tube properly and press it firmly into the socket.

(e) Lock snap clip at base to secure tube in its socket and replace plate cap.

(4) Replacing the low voltage rectifier tubes, type 5R4WGY (V201, V202), is the same as above, except omit step (a).

(5) The Power Amplifier and Modulator tubes, type 4-65A (V407, V408, V305, V306) are held in place by a pressure spring clamp. When replacing a tube of this type proceed as follows:

(a) Remove plate cap.

(b) Grasp the glass bulb of the tube and pull it from the socket, rocking it very gently in order to release the prongs.

(c) Release spring clamp and orient the new tube to seat firmly in the socket.

(d) Replace plate cap.

d. REPLACEMENT OF CRYSTAL.

(1) The channel frequency crystals Y-401 to Y-410, type CR-18/U (not furnished with the equipment) are located in the upper section of the Radio Transmitter T-408/URT-12.

(2) For convenience it is recommended that the crystal frequencies be arranged in ascending order to coincide with the numbered positions of the CRYSTAL SWITCH.

(3) In the event a crystal is defective and a spare crystal of the same frequency is available, the crystal may be replaced in the field. The frequency marked on the new crystal should be checked to see that it is the same frequency as is marked on the old crystal. The location of the crystals is shown in Figure 5-1. It is necessary to remove the units from the cabinet as described in paragraph 3c(2) above.

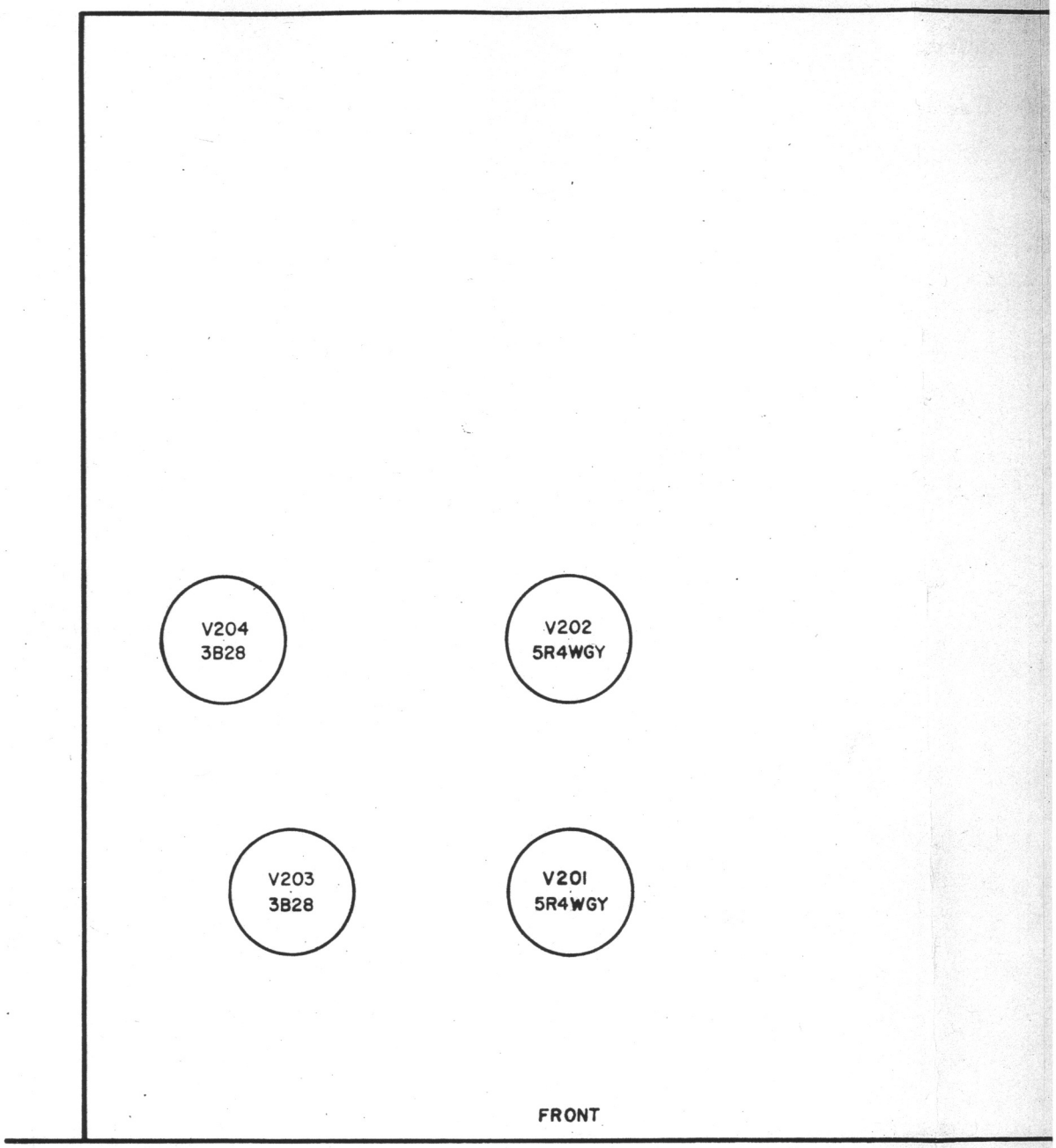

POWER SUPPLY
PP-950/URT-12

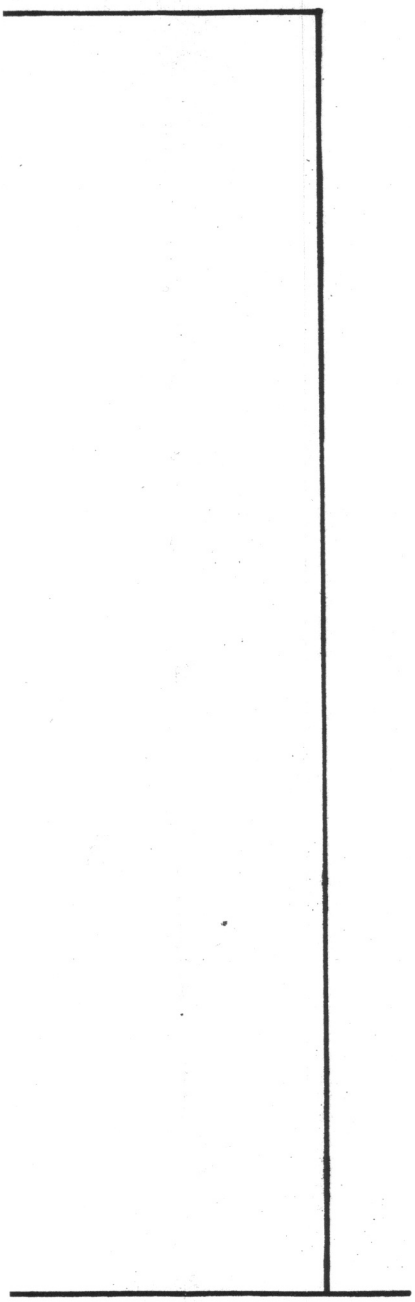

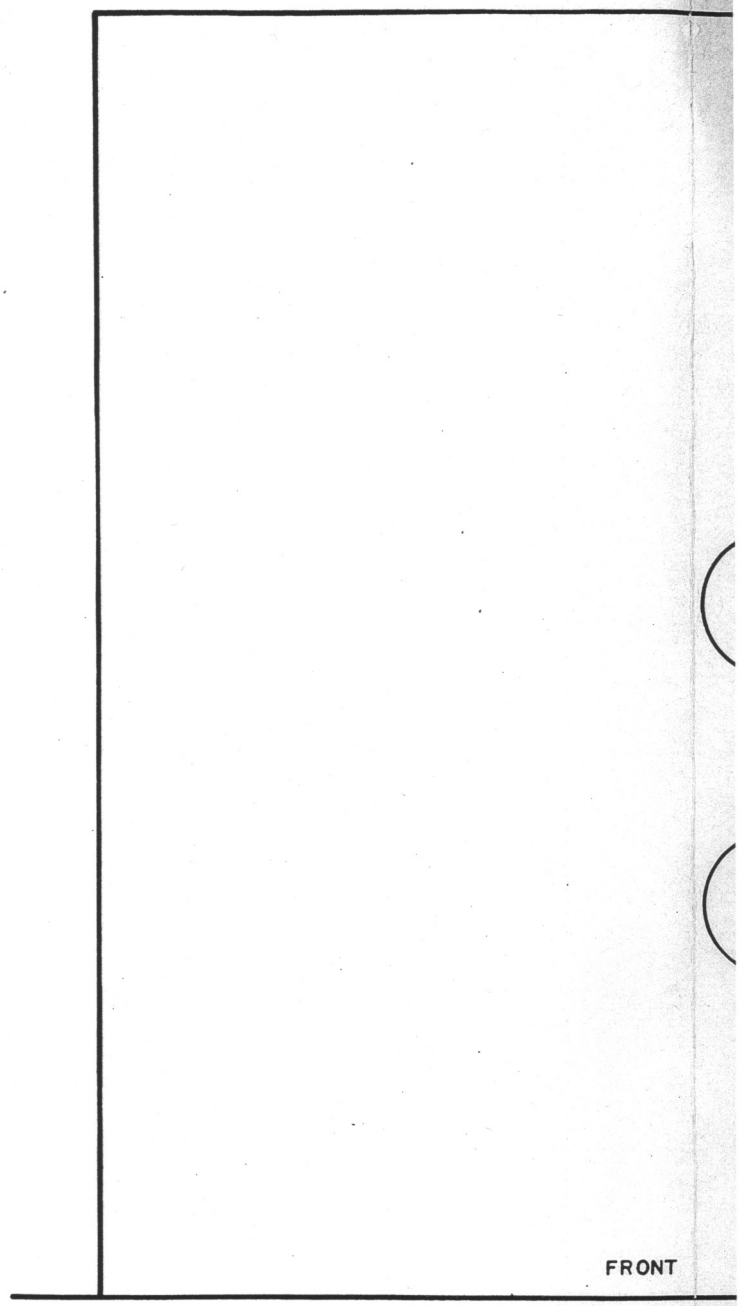

RADIO TRANSMIT
T-408/URT-
LOWER SECTION

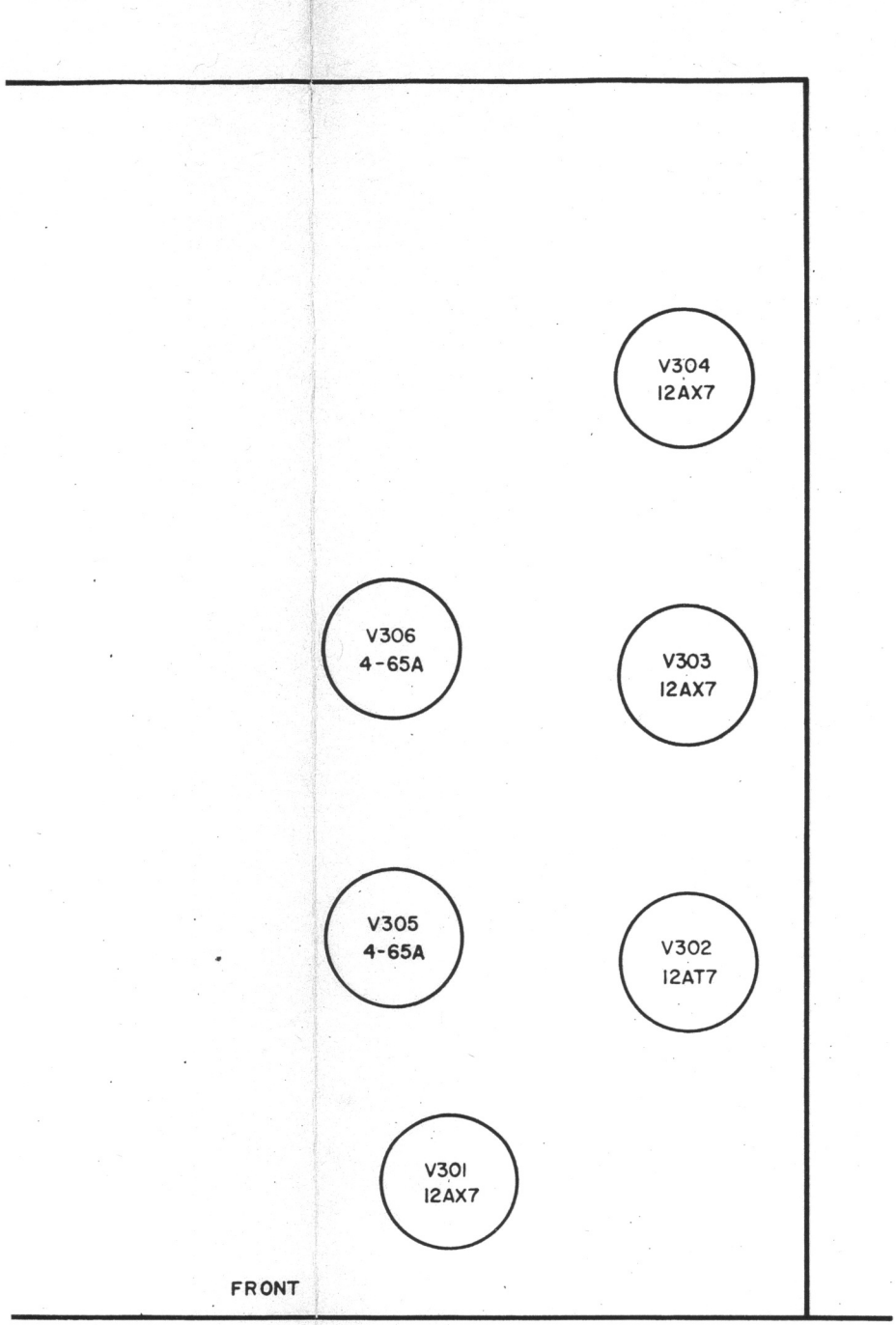

RADIO TRANSMITTER
T-408/URT-12
LOWER SECTION

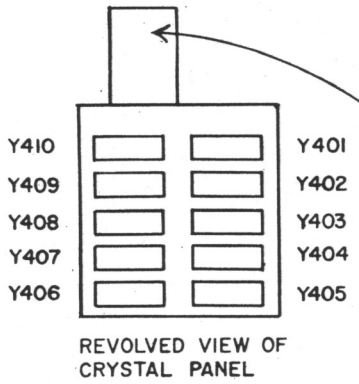

REVOLVED VIEW OF
CRYSTAL PANEL

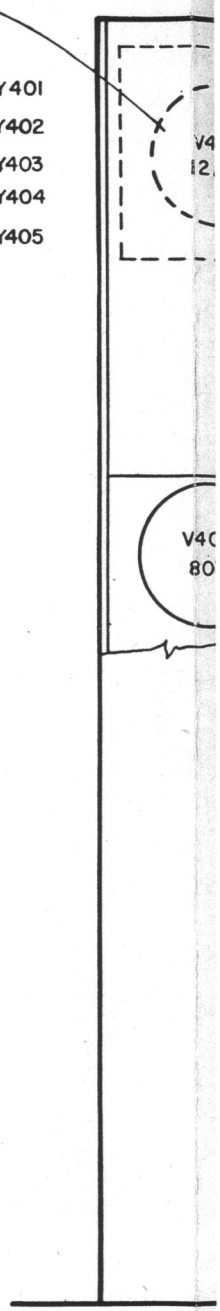

Figure 5

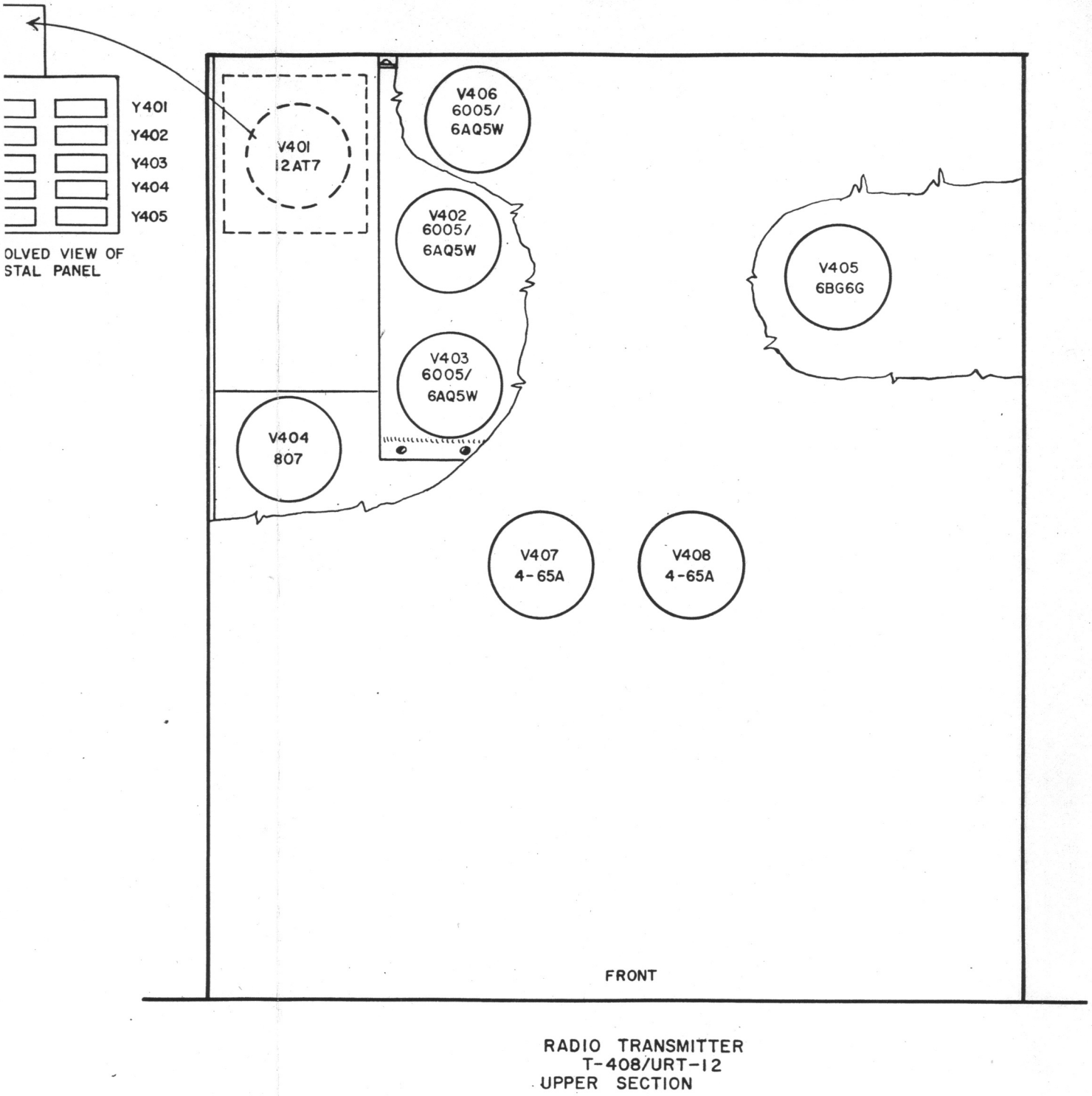

Figure 5-1. Location of Tubes and Crystals

NOTE

Crystals may be safely replaced while the EMERGENCY-LINE switch is ON, but it is not recommended that this be done unless it is imperative that the equipment be kept continuously energized.

(a) Withdraw the unit to the service position.

(b) Release spring clip on the defective crystal and replace with new one in proper socket.

(c) Slide unit back into cabinet.

SECTION 6

PREVENTIVE MAINTENANCE

1. INTRODUCTION.

The maintenance of radio equipment does not begin when the equipment fails to operate in the normal manner. Maintenance must begin as soon as the equipment is installed and continued regularly during the entire life of the equipment. Regular inspection and care, known as preventive maintenance, is just as important as corrective maintenance. A schedule of preventive maintenance, if rigidly adhered to, will prevent most of the common faults and breakdown. Only a few minutes each day are needed to make sure that the equipment is free from dirt, dust, excess moisture, vermin; that all cables and plugs of the equipment are clean and tight-fitting; that parts are properly lubricated and that no component of the set is being abused or neglected.

2. PREVENTIVE MAINTENANCE SCHEDULE.

NOTE

Maintenance procedures other than those covered in Section 5 should be performed by qualified technical personnel only.

The maintenance schedule in Table 6-1 provides aguide for the personnel charged with the maintenance of this equipment. Before performing any maintenance inspection or checks, personnel should familiarize themselves with Section 4 and paragraph 2 of Section 5. The tightening and adjustment specified in the table can all be performed with the usual small tools available to a technician. An alignment tool is provided with the equipment. Cleaning operations should be performed using a lint-free cloth and dry-cleaning solvent (NOT GASOLINE) or using No. 0000 wet-or-dry sandpaper as is appropriate.

3. LUBRICATION.

a. The only component of the transmitter which requires lubrication at regular intervals is the CRYSTAL SWITCH Chain Drive assembly O407 and O408 shown in Figure 7-____. Apply a small amount of light machine or instrument oil (Spec MIL-O-6085) when necessary. Check quarterly.

b. In case there is mechanical binding of dials, switch detents, sliding

contacts, or rotating parts, (NOT ELECTRICAL CONTACTS), a small amount of Navy spec 14-L-3 Grade I grease or commercial "Lubriplate No. 105" may be applied. When necessary apply a small amount of light machine or instrument oil (Spec. MIL—O-6085) to the drawer slides on the chassis and in the cabinet.

TABLE 6-1 PREVENTIVE MAINTENANCE SCHEDULE

	WHAT TO CHECK	HOW TO CHECK	PRECAUTIONS AND REMEDIES
HOURLY	1. Control and emission indicators.	Follow procedures in check chart in section 5.	Replace lamp if defective.
EACH WATCH	1. Transmitter in operation.	a. Standby:- Check items 1,2 and 3 in first section of Table 5-1. b. Operating:-Check items 1,2,3,4, and 5 of second section of Table 5-1.	a. Report unsatisfactory operation and have them corrected as soon as possible. b. Report unsatisfactory operation. Readjust tuning if necessary.
DAILY	1. Clean equipment.	a. Remove dirt fron controls and outside of cabinet. b. Place EMERGENCY-LINE switch in OFF position and dust inside of equipment.	a. Do not disturb control settings. b. Do not touch contacts, complicated mechanisms or delicate components such as relays and switches. Do not disassemble units or remove covers.
DAILY	2. Check connections.	a. Feel all plug connections for possible looseness. b. Check that set screws and couplings are tight.	Tighten, if necessary.

TABLE 6-1 PREVENTIVE MAINTENANCE SCHEDULE (Cont'd)

	WHAT TO CHECK	HOW TO CHECK	PRECAUTIONS AND REMEDIES
DAILY	3. Transformers, reactors, capacitors.	Visually inspect and/or feel components for overheating or damage.	a. Watch for breakage. b. Investigate and remedy overheating or breakdown. c. Replace damaged components.
DAILY	4. Relay contacts.	Examine for pitting, corrosion or uneven pressure.	a. Clean contacts with carbon tetrachloride. b. Burnish with burnishing tool. c. Adjust contact pressure.
DAILY	5. Interlocks and HV grounding switches.	a. Check chassis and cabinet interlocks manually. b. Check HV grounding switches on chassis manually.	Spring return should be positive. Replace if defective.
DAILY	6. Zero setting of meters.	Remove all power and check position of meter pointers.	Adjust to "0" with small screw driver.
WEEKLY	1. Rotary switch contacts.	Visually inspect contacts for pitting, corrosion or loss of tension.	a. Clean with carbon tetrachloride or crocus cloth. b. Replace, if necessary. Refer to Section 7.

TABLE 6-1 PREVENTIVE MAINTENANCE SCHEDULE (Cont'd)

	WHAT TO CHECK	HOW TO CHECK	PRECAUTIONS AND REMEDIES
WEEKLY	2. Air filters.	Inspect filters for dust and dirt.	Remove filters and clean by tapping them lightly or dousing in carbon tetrachloride.
WEEKLY	3. Blower	Check motor for overheating and that impeller is not loose.	Investigate cause and tighten impeller or replace motor if necessary.
WEEKLY	4. Operation of controls.	a. Operate all power controls. b. Check operation of modulator bias failure relay (K301) by removing fuse F204. c. Check operation of overload relay by detuning PA.	a. Report any improper operation. If repair is required, refer to Section 7. b. MOD. CATHODE meter indicator goes to zero. c. CAUTION: Do not allow PA to remain untuned for more than a few seconds.
MONTHLY	1. Operation of tuning controls.	a. Rotate all tuning controls and check couplings and dials.	a. Couplings should be tight, switches should line up at proper points. b. Operation should be smooth.

TABLE 6-1 PREVENTIVE MAINTENANCE SCHEDULE (Cont'd)

	WHAT TO CHECK	HOW TO CHECK	PRECAUTIONS AND REMEDIES
MONTHLY	2. Tubes, sockets and connections.	a. Remove tubes, check pins for dirt or corrosion. b. Examine socket connections and plate clips for dirt, corrosion and loss of pressure. c. Examine sockets for cracks or breakage.	a. Clean pins using crocus cloth. b. Remove dirt or corrosion with crocus cloth. Bend socket clips slightly to increase pressure if necessary. c. Replace broken or cracked socket.
MONTHLY	3. Terminal screws and component screws.	Check for tightness.	Tighten where necessary.
QUARTERLY	1. Tube life.	Review tube life history to see if replacement is warranted.	Replace tubes where necessary.

TABLE 6-1 PREVENTIVE MAINTENANCE SCHEDULE (Cont'd)

	WHAT TO CHECK	HOW TO CHECK	PRECAUTIONS AND REMEDIES
QUARTERLY	2. Blower	Rotate and note if bearings are worn.	Replace motor if necessary.
QUARTERLY	3. 12 volt dc supply.	Check output with voltmeter.	If output is less than 9.5 volts, replace rectifier (CR302).
ANNUALLY	1. Transmitter overhaul.	a. Remove transmitter from service and disassemble units from cabinet. b. Disassemble and clean every accessible component. c. Replace damaged or worn out parts or frayed wiring.	a. Experienced technicians must be available for this work. b. Use care and follow cleaning procedures above. c. Check all connections after reassembly. Follow Section 3 procedures in placing equipment back in operation.

SECTION 8

PARTS LISTS

Table

8-1 --- Table of Replaceable Parts

8-2 --- Maintenance Parts Kits

TABLE 8-1 TABLE OF REPLACEABLE PARTS (Cont'd)

Reference Symbol	Standard Navy Stock Number	Name and Description	Locating Function
		RADIO TRANSMITTING SET AN/URT-12	
100 to 499	16-T-90917-6181	TRANSMITTING SET, RADIO: A1 and A3 emission, MBCA Ref Dwg Group 5; frequency data, 2 to 30 mc range, 9 bands; crystal oscillator frequency control; 100 w power output A1 emission; 75 w power output A3 emission; operating power requirements, ac, 115 v, 50 to 60 cycles, single phase; enclosed in metal case; over-all dim., 20-1/2 in. lg, 26-7/16 in. wide max, 38-3/4 in. high; floor or table mtg; major components, one AN, Cabinet, electrical equipment, Type No. CY-1369/URT-12; one AN, Radio Transmitter Type No. T-408/URT-12; special features, capable of remote control from a standard Navy 6 wire remote control system, facility for external master oscillator operation; data regarding "the mfr", Radiomarine Corp. of America, Dwg. No. D-50084; gov't spec data, BUSHIPS, Spec SHIPS-T-1080; gov't type data, AN, Transmitting Set, Radio, Type AN/URT-12.	Transmit A.M. signals
100 to 199	16-C-10645-6732	CABINET, ELECTRICAL EQUIPMENT: aluminum alloy, enameled finish, light gray, over-all dim., 21-1/2 in. lg, 24-1/2 in. wide max. 38-3/4 in. high; six shock mtgs, four on base and two on upper rear; accessories c/o, 2 interlock switches, 2 receptical connectors, 2 terminal boards, 2 pairs of slides for mtg major components; wires; special features, air intake in bottom, air exhaust in upper rear; gov't spec data, BUSHIPS, Spec SHIPS-T-1080; gov't type data, AN, Electrical Equipment, Cabinet, Type No. CY-1369/URT-12; data regarding "the mfr", Radiomarine Corp. of America, Dwg. No. D-50122; AN, Radio Transmitting Set, AN/URT-12.	Housing AN/URT-12
200 to 299	16-P-67308-5018	POWER SUPPLY: rectification data, electronic type, full wave; output data, direct current 1500 v at 250 ma, 500 v at 250 ma, -150 v at 250 ma, alternating current, 115 v, 1.1 amp; input data, ac, 115 v, 50 to 60 cycles, single phase; over-all dimensions, 19-5/8 in. lg, 20 in. wide, 10-15/16 in. high; filter included; mounting data, panel mounted on slides, mts by eight 12-24 mtg holes spaced approx 5 in. c to c; data regarding "the mfr", Radiomarine Corp. of America, Dwg. No. C-40139, gov't type data, AN, Power Supply, Type PP-950/URT-12; p/o AN, Radio Transmitting Set, Type AN/URT-12.	Provides DC voltage for AN/URT-12
300 to 499	16-T-38648-1181	TRANSMITTER, RADIO: A1 and A3 type of emission, MBCA Ref Dwg Group 5; frequency data, 2 to 30 mc range, 9 bands; crystal frequency control; power output, 100 w A1 emission, 75 w A3 emission, operating power requirements, ac, 115 v, 50 to 60 cycles, single phase, dc, 1500 v at 340 ma, 500 v at 250 ma, -150 v, 12 v; inclosed in metal cabinet; over-all dimensions, 20-1/4 in. lg, 19-5/8 in. wide, 24-1/8 in. high; mounts in metal cabinet; special features, includes 12 volts rectified power supply, unit pulls out on two channel type guide drawers, facility for external master oscillator operation; data regarding "the mfr", Radiomarine Corp. of America, Dwg. No. D-50121; gov't identification data, AN, Transmitter, Radio, T-408/URT-12; gov't spec data, U.S. Coast Guard, Spec No. RTTS-378; p/o AN, Radio Transmitting Set, Type AN/URT-12.	Supplies both the audio for modulation and the R.F. carrier

TABLE 8-1 TABLE OF REPLACEABLE PARTS (Cont'd)

Reference Symbol	Standard Navy Stock Number	Name and Description	Locating Function
		RADIO TRANSMITTING SET AN/URT-12	
A101	17-M-75577-6768	MOUNTS, SHOCK: designed for absorption of high impact shocks; composition data, steel and rubber, cadimum plated finish; physical data, static defection range 0.013 in. to 0.032 in. from min. to max. assigned load; over-all dimensions, 3 in. lg, 3 in. wide, 1-1/2 in. high; special features, center hole for 3/8 in. three-bolt, 125 to 360 lbs load range; data regarding a "typical mfr", The Barry Corp, Cambridge, Mass, Part No. C-2150-6.	Cabinet mounting
A102		Not used.	
A103	17-C-794001-260	CLEANER ELEMENT, AIR: replaceable type; material data, aluminum filter, aluminum frame; over-all dim., 6 in. wide, 8 in. long, 3/4 in. thick; data regarding "the mfr", Radiomarine Corp of America, Dwg. No. B-31525.	Cabinet air filter
A104	17-C-794001-261	CLEANER ELEMENT, AIR: replaceable type; material data, aluminum filter, aluminum frame; over-all dim., 4 in. wide, 9 in. long, 3/4 in. thick; data regarding "the mfr", Radiomarine Corp of America, Dwg. No. B-31524.	Blower air filter
A105	"for reference only"	COVER: aluminum, 24ST; 8-25/32 in. lg, 4-1/32 in. wide; mounts w/ten 8-32, 5/16 in. lg, NPRHBM screws; Radiomarine Dwg. A-11939.	Rear cabinet
A201A	"for reference only"	GUIDE, DRAWER: channel type; aluminum; right hand; 200 lbs capacity per pair; 17-7/8 in. lg o/a closed; travel length 17 in; Radiomarine Dwg. C-40816-2.	Mounts PP-946/ URT-12
A201B	"for reference only"	GUIDE, DRAWER: channel type; aluminum; left hand; 200 lbs capacity per pair; 17-7/8 in. lg o/a closed; travel length 17 in; Radiomarine Dwg. C-40816-1.	Mounts PP-946/ URT-12
A301A	"for reference only"	GUIDE, DRAWER: channel type; aluminum, right hand, 200 lbs capacity per pair; 16-7/8 in. lg o/a closed; travel length 21 in.; Radiomarine Dwg. D-50559-2.	Mounts T-408/ URT-12
A301B	"for reference only"	GUIDE, DRAWER: channel type; aluminum, left hand; 200 lbs capacity per pair; 16-7/8 in. lg o/a closed; travel length 21 in., Radiomarine Dwg. D-50559-1.	Mounts T-408/ URT-12
A302	"manufacture and assemble locally"	COVER, CONTROL: aluminum alloy 24 ST; gray enamel; 4-11/16 in. lg, 1-1/4 in. wide, 1/4 in. thick o/a; mounts by two 6-32 thd retainers located on 4-3/16 in. center; Radiomarine Dwg. No. A-11980.	Front control cover
B401	"for reference only"	FAN, CENTRIFUGAL: single unit operating on a common shaft; prime mover supplied w/unit, electric motor type, 1/300 hp, 115 v AC, 50/60 cycles, single phase, 3200 rpm, horizontal mtg; CCW rotation as view facing the driving side; unit includes one AC motor, one impeller Torrington No. 216D031; over-all dim. 6-15/32 in. lg, 3-3/4 in. wide, 3-5/8 in. high; Air-Marine Motors, Inc; Seaford, L.I., N.Y. No. A-15BF-24.	Cooling AN/URT-12

TABLE 8-1 TABLE OF REPLACEABLE PARTS (Cont'd)

Reference Symbol	Standard Navy Stock Number	Name and Description	Locating Function
		RADIO TRANSMITTING SET AN/URT-12	
B401A	17-I-19004-3251	IMPELLER, BLOWER, CENTRIFUGAL: paddle type; radial tip blade; steel; double width; 31 blades; designed for CW rotation; over-all dim., 2-1/2 in. dia, 2 in. wide; hub data, 1 located on center axis, 9/16 in. lg, 1/4 in. dim. of bore; data regarding "the mfr", Torrington Co., Torrington, Conn. Part No. 216D031, p/o Air Marine Dwg. A 15BF-24.	p/o B401
B401B	17-M-54451-5905	MOTOR, ALTERNATING CURRENT: induction type; operating power requirements, AC, 115 V, 60 cycles, single-phase, 0.2 amps, 0.9 power factor; mechanical power output data, 1/300 hp, 1.05 in-oz torque, shaft data, single take-off, 3200 rpm. CCW rotation looking at load end; temperature data, -40 deg. C to 115 deg. C; motor dimensional data, 2.910 in. lg, excluding shaft, 1.950 in. dia, 0.2498 - 0.2500 dia shaft, shaft extends 2-1/4 in. from frame; data regarding "the mfr", Air-Marine Motors Inc., Amityville, N.Y., type A15CF, p/o Air-Marine Dwg. A15BF-24.	Motor for B401
C201	16-C-49982-1020	CAPACITOR, FIXED, PAPER DIELECTRIC: 4 uf, +20% -10% tolerance; 1000 v DC working; JAN type CP70E1EG405V.	Low voltage filter
C202	16-C-49221-9883	CAPACITOR, FIXED, PAPER DIELECTRIC: 2 uf, +20% -10% tolerance; 600 v DC working; JAN type CP53B1EF205V.	K301 time delay
C203		Same as C201	Low voltage filter
C204		Not used.	
C205	16-C-49992-3475	CAPACITOR, FIXED, PAPER DIELECTRIC: 4 uf, +20% -10% tolerance; 2000 v DC working; JAN type CP70E1EJ405V.	High voltage filter
C206		Same as C205.	High voltage filter
C301	16-C-51881-9250	CAPACITOR, FIXED, PAPER DIELECTRIC: 10 uf, +20% -10% tolerance; 600 v DC working; JAN type CP70E1EF106V.	Microphone supply filter
C302		Same as C202.	K302-A time delay
C303	16-C-49981-9970	CAPACITOR, FIXED, PAPER DIELECTRIC: 4 uf, +20% -10% tolerance; 600 v DC working; JAN type CP70E1EF405V.	V301 plate decoupling
C304	16-C-32245-9294	CAPACITOR, FIXED, MICA DIELECTRIC: 3300 uuf, ±5% tolerance; 500 v DC working; JAN Type CM30D332J.	V301 grid filtering
C305		Same as C304.	V301 grid filtering
C306		Same as C304.	V302 plate, high frequency by-pass
C307	16-C-32641-6328	CAPACITOR, FIXED, MICA DIELECTRIC: 4700 uuf, ±5% tolerance; 500 v DC working; JAN type CM35B472J.	V302 L.F. compensation
C308		Same as C307.	V302 L.F. compensation.

TABLE 8-1 TABLE OF REPLACEABLE PARTS (Cont'd)

Reference Symbol	Standard Navy Stock Number	Name and Description	Locating Function
		RADIO TRANSMITTING SET AN/URT-12	
C309	16-C-33279-7540	CAPACITOR, FIXED, MICA DIELECTRIC: 8200 uuf, ±10% tolerance; 500 v DC working; JAN type CM40B822K.	V301 plate decoupler
C310	16-C-~~31908-1564~~ 31269-9494	CAPACITOR, FIXED, MICA DIELECTRIC: ~~2200~~ 1200 uuf, ±~~10~~ 5% tolerance; 500v DC; Jan type ~~CM30B222K~~ CM30D122J.	V302 grid coupling
C311		Same as C307	Modulation level shunt
C312		Same as C307	V302 low frequency compensator
C313		Same as C307	V302 low frequency compensator
C314	16-C-45807-8094	CAPACITOR, FIXED, PAPER DIELECTRIC: 0.1 uf, ±20% tolerance; 600 v DC working; JAN type CP26A1EF104M.	V302 inverse feedback
C315	~~16-C-31269-9494~~	~~CAPACITOR, FIXED, MICA DIELECTRIC: 1200 uuf, ±5% tolerance; 500 v DC working; JAN type CM30D122J.~~ SAME AS C-310	V302 grid shunt
C316		Same as C303.	V302, V303, V304 B+ bypass
C317	16-C-29898-3606	CAPACITOR, FIXED, MICA DIELECTRIC: 390 uuf, ±5% tolerance; 500 v DC working; JAN type CM20D391J.	V302 H.F. compensator
C318		Same as C317	V302 H.F. compensator
C319		Same as C317	V302 H.F. compensator
C320		Same as C317	V302 H.F. compensator
C321		Same as C314	V302 inverse feedback
C322	16-C-29613-2676	CAPACITOR, FIXED, MICA DIELECTRIC: 270 uuf, ±10% tolerance; 500 v DC working; JAN type CM20B271K.	V303 grid coupler
C323	16-C-30536-4764	CAPACITOR, FIXED, MICA DIELECTRIC: 680 uuf, ±10% tolerance; 500 v DC working; JAN type CM30B681K.	V302 grid coupler
C324		Same as ~~C315~~ C-310	V302 H.F. response
C325		Same as C314	V304 grid coupling
C326	16-C-30109-3806	CAPACITOR, FIXED, MICA DIELECTRIC: 470 uuf, ±5% tolerance, 500 v DC working; JAN type CM20D471J.	V303A grid shunt
C327	16-C-26843-5676	CAPACITOR, FIXED, MICA DIELECTRIC: 22 uuf, ±10% tolerance; 500 v DC working; JAN type CM20B220K.	V304 step attenuator
C328		Same as C314	V304B grid coupling
C329		Same as C303	V302, V303, V304 B+ bypass
C330		Same as C317	V303 inverse feedback

TABLE 8-1 TABLE OF REPLACEABLE PARTS (Cont'd)

Reference Symbol	Standard Navy Stock Number	Name and Description	Locating Function
RADIO TRANSMITTING SET AN/URT-12			
C331		Same as C304.	V305 grid coupling
C332		Same as C202.	V305 bias filter
C333		Same as C304.	V306 grid coupling
C334	16-C-32647-8778	CAPACITOR, FIXED, MICA DIELECTRIC: 4700 uuf, ±10% tolerance; 2500 v DC working; JAN type CM50B472K.	V303 inverse feedback
C335	16-C-47322-1210	CAPACITOR, FIXED, PAPER DIELECTRIC: 0.5 uf, +20%, -10%, 2000 v DC working; JAN type CP70E1EJ504V.	V404 screen blocking capacitor
C336		Same as C205.	R368 audio bypass
C337		Same as C303.	V405 grid decoupler
C338	16-C-51501-9840	CAPACITOR, FIXED, PAPER DIELECTRIC: 8 uf, +20% -10% tolerance; 600 v DC working; JAN type CP70E1EF805V.	R369 keying relay time delay adjust
C339		Same as C309.	L.F. Compensator
C340 to C379		Not used.	
C380	16-C-20906-7641	CAPACITOR, FIXED, ELECTROLYTIC: 1100 uf, ±10% tolerance, 25 v DC working; JAN type CE41F112F.	12 volt supply filter
C381		Same as C380.	12 volt supply filter
C382		Same as C202.	Bias filter
C401		Same as C309.	V401A plate decoupling
C402		Same as C309.	V401A plate decoupling
C403	16-C-64036-4565	CAPACITOR, VARIABLE, CERAMIC DIELECTRIC: 4.5 to 25 uuf, 500 v DC working; JAN type CV11A250.	V401A grid to cathode feedback adjust
C404	16-C-25107-8756	CAPACITOR, FIXED, MICA DIELECTRIC: 5 uuf, ±20% tolerance; 500 v DC working; JAN type CM20B050M.	V401A grid to cathode feedback
C405	16-C-27366-1201	CAPACITOR, FIXED, MICA DIELECTRIC: 39 uuf, ±5% tolerance; 500v DC working; JAN type CM20C390J.	V401A cathode bypass
C406	16-C-27582-1876	CAPACITOR, FIXED, MICA DIELECTRIC: 47 uuf, ±10% tolerance; 500 v DC working; JAN type CM20B470K	V401B grid coupling
C407		Same as C309.	V401B plate decoupling
C408		Same as C309.	V401B cathode bypass
C409	16-C-33623-3169	CAPACITOR, FIXED, MICA DIELECTRIC: 0.01 uf, ±10% tolerance; 1200 v DC working; JAN type CM50B103K.	Exciter, B+, RF bypass

TABLE 8-1 TABLE OF REPLACEABLE PARTS (Cont'd)

Reference Symbol	Standard Navy Stock Number	Name and Description	Locating Function
RADIO TRANSMITTING SET AN/URT-12			
C410		Same as C309	V402 plate decoupler
C411		Same as C406	V402 grid coupling
C412		Same as C309	V401B grid by-pass
C413		Same as C309	V402 grid by-pass
C414		Same as C314	V402 key wave shaping
C415		Same as C309	V402, V403 screen grid decoupler
C416		Same as C309	V402 screen grid decoupler
C417		Same as C309	V402 cathode by-pass
C418		Same as C309	V403 screen by-pass
C419		Same as C406	V403 grid coupling
C420		Same as C309	V403 cathode by-pass
C421		Same as C406	V404 grid coupler
C422	16-C-61031-2411	CAPACITOR, VARIABLE, AIR DIELECTRIC: plate meshing type; 1 section; capacity, 147 uuf ±10% max, 7.6 uuf ±20% +2 uuf min; tuning characteristic SLC; over-all dim., excluding shaft and bushing, 1-3/4 in. lg, 1-13/32 in. wide, 1-7/16 in. high, bushing dim., 37/64 in. lg, 3/8 in. dia., 3/8-32 thd, shaft dim., 15/64 in. lg, .25 in. dia; adjustment data, extension shaft adjustment, 180 deg. CW rotation of plates; plate data, 27, aluminum and brass; data regarding "the mfr" Allen D. Cardwell Mfr. Corp., Part No. PL-6018-8, per Radiomarine Dwg. A-12002.	IPA TUNING
C423	16-C-63900-6761	CAPACITOR, VARIABLE, CERAMIC DIELECTRIC: 1.5 to 7 uuf , 500 v DC working; JAN type CV11A070.	V404 plate trimmer
C424	16-C-30115-6317	CAPACITOR, FIXED, MICA DIELECTRIC: 470 uuf , ±10% tolerance; 2500 v DC working; JAN type CM45B471K.	V403 plate tank
C425	16-C-47321-9648	CAPACITOR, FIXED, PAPER DIELECTRIC: 0.5 uf , +20%, -10% tolerance; 600 v DC working; JAN type CP53B1EF504V.	V405 keying wave shaping
C426		Same as C309	V404 grid decoupler
C427		Same as C202	Aid closing of K402
C428		Same as C425	V405 keying wave shaping

TABLE 8-1 TABLE OF REPLACEABLE PARTS (Cont'd)

Reference Symbol	Standard Navy Stock Number	Name and Description	Locating Function
		RADIO TRANSMITTING SET AN/URT-12	
C429	16-C-29266-5041	CAPACITOR, FIXED, MICA DIELECTRIC: 200 uuf, ±5% tolerance; 2500 v DC working; JAN type CM45B201J.	V404 plate padder
C430		Same as C422	IPA TUNING
C431		Same as C309	V404 cathode by-pass
C432		Same as C309	V405 screen grid by-pass.
C433	16-C-31908-1564	~~Same as C310.~~ CAP. FIX. MICA DIEL. 2200μμf, ±10% Tol., 500 v dcw JAN TYPE CM30B222K	V404 screen grid by-pass
C434	16-C-27583-3917	CAPACITOR, FIXED, MICA DIELECTRIC: 47 uuf , ±10% tolerance; 2500 v DC working; JAN type CM45B470K.	V407, V408 grid coupler
C435		Same as C409	V404 plate decoupler
C436		Same as C409	V407, V408 grid by-pass
C437	16-C-49221-9660	CAPACITOR, FIXED, PAPER DIELECTRIC: 2 uf , +20%, -10% tolerance; 200 v DC working; JAN type CP53B1EC205V.	V407, V408 grid by-pass
C438	16-C-48841-9495	CAPACITOR, FIXED, PAPER DIELECTRIC: 1 uf , +20%, -10% tolerance; 200 v DC working; JAN type CP53B1EC105V.	V406 cathode de-coupler
C439	16-C-30193-5370	CAPACITOR, FIXED, MICA DIELECTRIC: 510 uuf, ±10% tolerance; 500 v dc, 350 v ac,working; dim., Ref. Dwg Group 1, Style 11-P, 0.447 in. dia, 23/64 in. long; Erie Resistor Corp., Type No. 370-FA.	V407 screen by-pass
C440		Same as C439	V407, V408 filament by-pass
C441	16-C-28558-1676	CAPACITOR, FIXED, MICA DIELECTRIC: 100 uuf , ±10% tolerance; 500 v DC working; JAN type CM20B101K.	V407 filament by-pass
C442	16-C-33622-5588	CAPACITOR, FIXED, MICA DIELECTRIC: 0.01 uf , 10% tolerance; 300 v DC working; JAN type CM40B103K.	V407 filament by-pass
C443		Same as C439	V407 screen by-pass
C444		Same as C439	V407, V408 filament by-pass
C445		Same as C409	V407, V408 filament by-pass
C446		Same as C439	V407, V408 screen by-pass
C447		Same as C439	V408 screen by-pass

Reference Symbol	Standard Navy Stock Number	Name and Description	Locating Function
		RADIO TRANSMITTING SET AN/URT-12	
C448		Same as C441	V408 filament by-pass
C449		Same as C442	V408 filament by-pass
C450		Same as C439	V408 screen by-pass
C451	16-C-31087-3713	CAPACITOR, FIXED, MICA DIELECTRIC: 1000 uuf, ±5% tolerance; 5000 v DC working; JAN type CM70B102J.	V407, V408 plate blocking
C452	16-C-62844-2701	CAPACITOR, VARIABLE, AIR DIELECTRIC: plate meshing type; 2 sections; 165 uuf max, ±10%, 23 uuf min, ±20% +2 uuf; tuning characteristic SLC; o/a dim., 6-15/16 in. lg, 3-3/8 in. high, 4-1/4 in. wide; bushing dim., 7/16 in. lg, 3/8 in. dia, 24 thd; shaft dim., beyond bushing, 1-1/16 in. lg, .250 in. dia; adjustment data, extension shaft adjustment, 360 deg CW continuous tuning; plate data, 19 plates per section, iridite aluminium, data regarding "the mfr", Allen D. Cardwell, Part No. PL-8066-1 per Radiomarine Dwg. No. B-31556.	P.A. TUNING
C453	16-C-15167-2251	CAPACITOR, AIR DIELECTRIC: single section; capacitance data; 750 uuf, ±10% tolerance; plate data, 33 plates, aluminum, iridite #14 per MIL-C-5541; over-all dim., 4-9/32 in. lg, 2-1/4 in. wide, 2-1/4 in. high; data regarding "the mfr", Allen D. Cardwell, Plainville, Conn. Part No. PL-9706-1; per Radiomarine Dwg. No. A-12004.	P.A. tank RF ground
C454	16-C-17696-2381	CAPACITOR, FIXED, CERAMIC DIELECTRIC: section data, working voltage data, 7500 v DC, capacitance data, 200 uuf, ±10% tolerance; temperature coefficient data, 750 uuf per u f per deg C neg temp coef; style no. 29-P, Ref Dwg Group 1; case data, insulated, dim. data, Ref Dwg Group 1, 1-9/32 in. dia, 1-15/32 in. lg; schematic diagram No. 1-R, Ref Dwg Group 1; data regarding a "typical mfr", Centralab, Div. of Globe Union, Milwaukee, Wisc., type 851, Cat. No. 851-200N.	P.A. tank RF ground
C455	16-C-60036-2174	CAPACITOR, VARIABLE, AIR DIELECTRIC: plate meshing type; 1 section; capacity, 52 uuf max, 9 uuf min; straight line capacity tuning characteristic; 3500 v AC peak voltage at 4000 kc; dim. data, over-all dim., excluding shaft and bushing, 2-11/16 in. lg, 2-5/8 in. wide, 2-19/32 in. high, bushing dim., 3/8 in. lg, 3/8 in. dia, 24 threads per in., shaft dim. beyond bushing 1 in. lg, 1/4 in. dia; adjustment data, shaft adjustment, 360 deg. continuous rotation; plate data, 8 plates per section; aluminum; data regarding "the mfr", E. F. Johnson Co., Waseca, Minn. type 50E30 per Radiomarine Dwg. No. A-12003.	P.A. TUNING

TABLE 8-1 TABLE OF REPLACEABLE PARTS (Cont'd)

Reference Symbol	Standard Navy Stock Number	Name and Description	Locating Function
		RADIO TRANSMITTING SET AN/URT-12	
C456	16-C-63082-3550	CAPACITOR, VARIABLE, AIR DIELECTRIC: plate meshing type; two sections; capacity per section, 550 uuf max ±20%, +2 uuf, 25 uuf min, ±10%; tuning characteristic SLC; over-all dim., 2-3/4 in. lg, 4-1/4 in. wide, 3-7/8 in. high, bushing dim., 7/16 in. lg, 3/8 in. dia., 24 thread, shaft dim. beyond bushing, 3/8 in. lg, 1/4 in. dia; adjustment data, extension shaft adjustment, 360 deg continuous tuning; plate data, 12 plates per section, brass; data regarding "the mfr", Allen D. Cardwell, Plainville, Conn., part No. PL-8345-1, per Radiomarine Dwg. B-31555.	Antenna COUPLING control
C457	16-C-61249-1213	CAPACITOR, VARIABLE, AIR DIELECTRIC: plate meshing type; 1 section; capacity, 150 uuf max, 18 uuf min; straight line capacity tuning characteristic; 3500 v AC peak voltage; dimensional data, over-all dim. excluding shaft and bushing, 2-29/32 in. lg, 4-1/4 in. wide, 4-1/4 in. high; shaft dim. beyond bushing, 1/2 in. lg, 1/4 in. dia; adjustment data, shaft adjustment, 360 deg continuous rotation; data regarding "the mfr", E. F. Johnson Co., Waseca, Minn., type 150D35 per Radiomarine Dwg. No. B-31557.	ANTENNA TUNING
C458	16-C-17088-6501	CAPACITOR, FIXED, CERAMIC DIELECTRIC: single section; working voltage data, 15,000 v DC, capacitance data, 100 uuf, ±10% tolerance; temperature coefficient data, 750 uuf per uf per dec C neg temp coef; case data, insulated, dim. data, Ref Dwg Group 1, 1-9/32 in. dia, 1-15/32 in. lg; two tapped hole type terminals; data regarding a "typical mfr", Centralab, Div. of Globe Union, Milwaukee, Wisc., type 851, Cat. No. 851-100N.	Antenna matching
C459		Same as C458	Antenna matching
C460		Same as C454	Antenna matching
C461		Same as C442	Filament line bypass
C462		Same as C309	RF input DC blocking capacitor
C463	16-C-44281-9613	CAPACITOR, FIXED, PAPER DIELECTRIC: 0.05 uf, +20%, -10% tolerance; 600 v DC working; JAN type CP53B1EF503V.	V405 keying wave shaping
C464	16-C-31090-4164	CAPACITOR, FIXED, MICA DIELECTRIC: 1000 uuf, ±10% tolerance, 500 v DC working; JAN typeCM30B102K.	V405 wave shaping
C465	16-C-48841-9635	CAPACITOR, FIXED, PAPER DIELECTRIC: 1 uf +20%,-10% tolerance, 600 v DC working; JAN type CP53B1EF105V.	B401 phase splitter
C466		Same as C403	V403 plate band 5 and 7 trimmer
C467		Same as C423	V403 plate band 8, trimmer

TABLE 8-1 TABLE OF REPLACEABLE PARTS (Cont'd)

Reference Symbol	Standard Navy Stock Number	Name and Description	Locating Function
		RADIO TRANSMITTING SET AN/URT-12	
C468 C469		Same as C423 Same as C 457	V403 plate band 6 and 9 trimmer PA Plate Tank RF bypass
CR301	17-R-51401-8567	RECTIFIER, METALLIC: selenium; half-wave, miniature; max. input voltage 130 v rms, 60 cps, AC; DC output current 150 ma; max peak inverse voltage 380 volts; approx rectifier drop 5 volts; 1-3/16 in. sq. 7/8 in. thk, 1-1/2 in. high, o/a;mts by one No. 6-32 screw;composed of 5 rect. cells w/No. 5 finish, Navy spec 17R10; Radio Receptor No. 5P1.	P A bias supply
CR302	17-R-51054-4923	RECTIFIER, METALLIC: selenium; designed for single phase full wave bridge circuit Fig. 1, MBCA, Ref Dwg Group 23; Input data, 26 v AC, single phase; output data 20 v DC, 3.2 amp max. current,full-wave rectification; over-all dim. 3-3/4 in. lg, 3 in. wide, 3-9/16 in. high; data regarding "the mfr", Radio Receptor Co., Inc; Seletron Division, N.Y.C., Part No. U1B1S5F.	12 volt rectifier
CR401	16-T-51734-10	CRYSTAL UNIT, RECTIFYING: germanium type; 40 ma maximum continuous forward current; 60 volts peak inverse voltage; 1.0 uuf shunt capacitance; Spec. No. JAN-1A; Sylvania Type 1N-34A.	Keying supply
CR402		Same as CR401	Keying supply
CR403		Same as CR301	V406 cathode bias
E101	17-I-47417-4221	INSULATOR, BOWL: material data, ceramic, JAN-I-10 grade L-4, white; dim., MBCA Ref Dwg Group 9, 1-9/16 in. i.d., 7/16 in. center hole, 2-1/2 in. o.d., 1/4 in. lg. flange, 1-5/8 in. o/a height; spec data, JAN-I-8, JAN type NS5W4601 ; data regarding a "typical mfr", American Lava Corp., Chattanooga, Tenn. Cat. No. 1158.	Cabinet top,antenna mounting post
E102 (2 ea)	17-I-070281-6231	INSULATOR, STAND-OFF: ceramic; 1 in. lg, 1 in. wide 1 in. high; Spec. No. JAN-I-8; JAN Type NS5W1408.	Antenna contact support
E103		Same as E102	High voltage pick-up support
E104		Not used.	
E105		Not used.	
E106	"manufacture and assemble locally"	CONTACT, ELECTRICAL: movable connector; brass per MIL-B-895; silver plated .0005 in. thick; 1-1/2 in. lg, 1 in. wide, 1/8 in. thick; Radiomarine Dwg. A-11907.	Ground connection for T408/URT-12
E107	"manufacture and assemble locally"	CONTACT, ELECTRICAL: moveable connector, blade spring; phosphor bronze per MIL-B-892; silver plated .0005 in. thick; 1-1/2 in. lg; 11/16 in. wide upper end, tapers to 5/8 in. wide lower end, .020 in. thick; Radiomarine Dwg. A-11904.	H.V. contact
E-108	"manufacture and assemble locally"	CONTACT, ELECTRICAL: brass per MIL-B-895; silver plated .0005 in. thick; L-shaped, one leg 1-7/16 in. lg., other leg 7/8 in. lg., 3/4 in. wide, .091 in. thick, Radiomarine Dwg. A-11901.	RF contact

TABLE 8-1 TABLE OF REPLACEABLE PARTS (Cont'd)

Reference Symbol	Standard Navy Stock Number	Name and Description	Locating Function
RADIO TRANSMITTING SET AN/URT-12			
E201 (2 ea)	17-C-800934-501	CLIP, ELECTRICAL: electronic tube contact type; plate and grid cap; brass, cadmium plated; o/a dim. approx 1-3/8 in. lg, 19/32 in. wide, 1/2 in. dia; one solder lug connection; for 9/16 in. tube cap; National Co., Type 12.	Plate connectors for V203, V204
E202 (2 ea)	17-I- 48719-7756	INSULATOR, BUSHING: ceramic; conical, round shank; 1-5/16 in. dia, by 1-1/8 in. lg; Spec No. JAN-I-8; JAN Type NS5W4104.	High voltage bleeder resistor R204, R205
E203 (7 ea)	17-T-28254-9991	TERMINAL STUD: material data, ceramic, JAN-I-10, grade L-5 white ; 5/16 in. across flats, 19/32 in. lg o/a; data regarding a "typical mfr", Cambridge Thermionic Corp., Cambridge, Mass., Part No. X-1942-F6.	Tie points
E204 (4 ea)	16-M-60918-1606	BRACKET: JAN No. CP07SC2.	Mounts C201, C203
E205 (4 ea)	16-M- 61149-1025	BRACKET: JAN No. CP07SE6.	Mounts C205, C206
E301 (4 ea)	16-S-34576-6514	SHIELD, ELECTRON TUBE: brass; 1-15/16 in. lg, by 61/64 in. dia; twist lock mounted; Spec No. JAN-S-28A; JAN Type TS103U02.	Shield for V301, V302 V303, V304
E302	16-C-301253-832	CONTACT, ELECTRON TUBE: one round female contact, straight; 3/4 in. o.d. by 7/8 in. high; cylindrical dural body, has 6-32 set screw for mounting on tube plate cap; equipped w/heat dissipating fins; Eitel-McCullough, Inc; San Bruno, Calif; Eimac part No. HR6.	V305, V306 plate connectors
E303		Same as E203	Tie points
E304 (2 ea)		Same as E205	Mounts C336
E305 (2 ea)	16-M-61144-9802	BRACKET: JAN No. CP07SD3.	Mounts C301
E306 (8 ea)	16-M-60919-5051	BRACKET: JAN No. CP07SB4	Mounts C303, C316, C329, C331
E307 (2 ea)	16-M-61142-8075	BRACKET: JAN No. CP07SB2.	Mounts C335
E308 (2 ea)	16-M-61146-8319	BRACKET: JAN No. CP07SC3.	Mounts C338
E309 (2 ea)	17-I-48707-8667	INSULATOR, STAND-OFF: ceramic, 7/16 in. lg, 0.200 in. i.d.; Spec No. JAN-I-8; JAN Type NS5W4003.	P. A. dropping resistor mtg
E401	"for reference only"	SUPPRESSOR, PARASITIC: resistor and coil type, 3 turns of No. 14 copper, silver plated wire, 47 ohms, includes (R458); 3/4 in. lg, by 7/16 in. i.d.; two pig-tail leads located one on each end; Radiomarine Dwg. No. A-11985.	V404 grid, parasitic suppressor

TABLE 8-1 TABLE OF REPLACEABLE PARTS (Cont'd)

Reference Symbol	Standard Navy Stock Number	Name and Description	Locating Function
		RADIO TRANSMITTING SET AN/URT-12	
E402	"for reference only"	SUPPRESSOR, PARASITIC: resistor and coil type; 3 turns of No. 10 AWG copper, silver plated wire; 2-7/8 in. lg, by 7/16 in. i.d.; includes one 47 ohm resistor (R-459); Radiomarine Dwg. No. A-11983-2.	V404 plate suppressor
E403	"for reference only"	SUPPRESSOR, PARASITIC: resistor and coil type; 8 turns of No. 14 AWG copper, silver plated wire; 1 in. by 5/16 in. i.d.; includes one 22 ohm resistor (R-462); Radiomarine Dwg. No. A-11984.	V407 grid suppressor
E404	"for reference only"	SUPPRESSOR, PARASITIC: resistor and coil type; 3 turns of No. 10 AWG copper, silver plated wire; 2-1/8 in. lg, by 7/16 in. i.d.; includes: one 47 ohm resistor (R460); one coil Radiomarine Dwg A-11983-1, one strap Radiomarine Dwg A-11982; per Radiomarine Dwg B-31517.	V407 plate suppressor
E405		Same as E404	V408 plate suppressor
E406		Same as E403	V408 grid suppressor
E407 (2 ea)		Same as E302	V407, V408 plate connectors
E408 (4 ea)	17-I- 69173-7115	INSULATOR, STAND-OFF: ceramic; 5/8 in. lg, by 1/2 in. dia; JAN Type NS5W0205; per Spec. JAN-I-8.	C456 differential capacitor mtg.
E409	17-I- 69175-7136	INSULATOR, STAND-OFF: ceramic; 1/2 in. dia, by 3/4 in. lg; 1/4 in. lg. 8-32 thd each end; Spec No. JAN-I-8; JAN Type NS5W0206.	Support for power amplifier coils L421, L422
E410	17-I- 69180-7092	INSULATOR, STAND-OFF: ceramic; 1/2 in. dia. by 1-1/4 in. lg; Spec. No. JAN-I-8; JAN Type NS5W0210.	V404 plate suppressor stand-off
E411	17-I-69178-7156	INSULATOR, STAND-OFF: ceramic; 1/2 in. dia. by 1 in. lg; 3/8 in. lg, by 8-32 thd each end; Spec No. JAN-I-8; JAN Type NS5W0208.	Mounts C451
E412	17-I-69183-7055	INSULATOR, STAND-OFF: ceramic; 1/2 in. dia. by 1-1/2 in. lg; 3/8 in. lg, 8-32 thd each end; Spec No. JAN-I-8; JAN Type NS5W0212.	Mounts C451
E413	17-I-69218-9511	INSULATOR, STAND-OFF: ceramic; 3/4 in. dia, by 3 in. lg; Spec. No. JAN-I-8; JAN Type NS5W0324.	E404, E405 mounting
E414	17-I- 70388-6212	INSULATOR, STAND-OFF: ceramic; 3 in. high by 1 in. wide by 1 in. lg; Spec No. JAN-I-8; JAN Type NS5W1424.	Antenna pick-up
E415	17-I-70387-6347	INSULATOR, STAND-OFF: ceramic; 1 in. lg, by 1 in. wide, by 2-1/2 in. high; Spec No. JAN-I-8; JAN Type NS5W1420.	High voltage pick-up
E416 (2 ea)		Same as E202	R456 mounting

TABLE 8-1 TABLE OF REPLACEABLE PARTS (Cont'd)

Reference Symbol	Standard Navy Stock Number	Name and Description	Locating Function
		RADIO TRANSMITTING SET AN/URT-12	
E417	17-I-69154-6200	INSULATOR, STAND-OFF: ceramic; 3/8 in. dia., by 1/2 in. lg; 5/32 in. lg 6 32 thd each end; Spec No. JAN-I-8; JAN Type NS5W0104.	L401 mounting
E418		Same as E412	Antenna tubing support
E419 (2 ea)		Same as E409	S406 mounting
E420		Not used	
E421		Same as E301	Shield for V401
E422 (3 ea)	16-S-34607-6039	SHIELD, ELECTRON TUBE: brass, cylindrical shape; 2-1/4 in. by 13/16 in dia; twist lock mounting; Spec No. JAN-S-28A; JAN Type TS102U03.	Shield for V402 V403, V406
E423 (2 ea)	17-C-800487-451	CLIP, ELECTRICAL: brass, nickel plated; 1 in. lg, 7/16 in. wide, 3/8 in. high; solder lip type connection; for 3/8 in. dia tube cap; National Co, Malden, Mass; Part No. 24.	V404, V405 plate connections
E424	"manufacture and assemble locally"	ARRESTOR, ELECTRICAL SURGE: air-gap type, for inside use; o/a dim. excluding protruding screw, 2-1/4 in. lg, 1 in. w de, 2-3/8 in. high; one terminal solder lug type, c/o cold rolled steel frame w/ceramic insulation and acorn nuts and screws used as terminals; Radiomarine Dwg. No. B-31536.	Spark gap
E425	17-I-69160-6215	INSULATOR, STAND-OFF: ceramic; 3/8 in. dia, 1 in. lg; 3/8 in. lg 6-32 thd each end; Spec No. JAN-I-8; JAN Type NS5W0108.	L.F. choke insulator
E426	"manufacture and assemble locally"	CONTACT, ELECTRICAL: silver plated brass; o/a dim., 1-1/2 in. lg, 7/8 in. wide, 7/16 in. high; Radiomarine Dwg. A-11902.	H.V. pick-up
E427 (2 ea)		Same as E417	Mts R466
E428		Same as E417	Tie Points for R450 and R451
E429 (2 ea)		Same as E411	Mts for S406
E430		Same as E203	Tie points
E431	"manufacture and assemble locally"	LEAD, ELECTRICAL: brass, nickel plated, o/a dim, 0.750 in. lg, 0.312 in. wide, 0.015 in. thick; two 0.156 in. dia. holes located on 0.487 in. by 0.156 in. centers; Kulka Electrical Mfg. Part No. 601.	Terminal board jumper
E432	17-C-67444-1285	CONNECTOR, ADAPTER: 1 contact, male, round, one contact, female, round; angle type, 90 deg. angle; overall dim., 1-9/16 in. lg, 1-7/32 in. wide, 3/4 in. dia; body data, L-shaped, die cast zinc material, silver plated; American Phenolic Corp. Part No. 83-1AP.	Interconnector for J404 and P101

TABLE 8-1 TABLE OF REPLACEABLE PARTS (Cont'd)

Reference Symbol	Standard Navy Stock Number	Name and Description	Locating Function
		RADIO TRANSMITTING SET AN/URT-12	
F201	17-F-17411	FUSE, CARTRIDGE: 2 amp, 250 v AC, instantaneous; ferrule type, 3/8 in. dia. by 3/8 in. lg; laminated body; non-renewable fuse; indicating type; o/a 1-1/2 in. lg, by 3/8 in. dia; Bussmann Mfg.Co., St. Louis, Mo.; Type MIN (2 amp, 250v)	Filament supply fuse
F202	17-F-17419	FUSE, CARTRIDGE: 10 amp, 250 v AC, instantaneous; ferrule type, 3/8 in. dia.by 3/8 in lg; laminated body; non-renewable fuse; indicating type; o/a 1-1/2 in. lg. by 3/8 in. dia; Bussmann Mfg. Co., St. Louis, Mo; Type MIN (10 amps, 250v)	H.V.transformer fuse
F203	17-F-17410	FUSE, CARTRIDGE: 1 amp, 250 v AC, instantaneous; ferrule type, 3/8 in. dia.by 3/8 in. lg; laminated body; non-renewable fuse, indicating type; o/a 1-1/2 in. lg. by 3/8 in. dia; Bussmann Mfg. Co., St. Louis, Mo; Type MIN (1 amp, 250v)	Rectifier filament supply fuse
F204	17-F-17412	FUSE, CARTRIDGE: 3 amps, 250 v AC, instantaneous; ferrule type, 3/8 in. dia.by 3/8 in. lg; laminated body; non-renewable fuse, indicating type; o/a 1-1/2 in. lg, by 3/8 in dia; Bussmann Mfg. Co., St. Louis, Mo; Type MIN (3 amps, 250v)	L.V. transformer fuse
F205	17-F-17410	~~Same as F203~~ Fuse, Cartridge 1 Amp 250 VAC	115 volt control circuit fuse.
F206	17-F-17424-5	FUSE, CARTRIDGE: electrical rating, 15 amps, 250 v AC; operating data, instantaneous; terminal data, ferrule type, dimensions 3/8 in. dia, 3/8 in. lg; enclosed type, laminated body; one time; indicating, pin extends from end of fuse when fuse is blown; overall dim., 1-1/2 in. lg, 3/8 in. dia; data regarding a "typical mfr" Bussmann Mfg. Co., St. Louis, Mo., Type MIN (15 amps 250v AC).	Line fuse
F207		Same as F206	Line fuse
F208		Same as ~~F203~~ F-205	Auxiliary control circuit fuse
F209		Same as F202	H.V. spare fuse
F210		Same as F204	L.V. spare fuse
F211		Same as ~~F203~~ 205	Control circuit spare fuse
F212		Same as F206	Line fuse spare
F213		Same as F206	Line fuse spare
F214		Same as F201	Filament supply fuse spare
F215		Same as ~~F203~~ 201	Rectifier filament supply fuse spare

TABLE 8-1 TABLE OF REPLACEABLE PARTS (Cont'd)

Reference Symbol	Standard Navy Stock Number	Name and Description	Locating Function
RADIO TRANSMITTING SET AN/URT-12			
F216		Same as ~~F203~~ 205	Auxiliary fuse spare
H201	"for reference only"	ALIGNMENT TOOL, ELECTRONIC EQUIPMENT: screw driver type, 2 working ends; recessed blade; extended blade, 1/16 in. lg, nonadjustable; 7-1/8 in. lg o/a; material, clear tenite, screwdriver blade, steel; Insuline Corp of America, Dwg. No. 6192.	Oscillator tuning
H202	"for reference only"	WRENCH: multiple spline set screw key; double-ended; L-shaped No. 6; 0.076 dia by 3/4 in. wide by 1-15/16 in. lg; alloy steel, black finish; Bristolco No. 6, short arm.	Tighten set screws
H203	"for reference only"	WRENCH: multiple spline set screw key; double-ended, L-shaped No. 8; 0.094 in. dia by 13/16 in. wide by 2-1/8 in. lg, alloy steel, black finish; Bristolco No. 8, short arm.	Tighten set screws
H204	"for reference only"	WRENCH: multiple spline set screw key; double-ended, L-shaped No. 10; 7/64 in. dia, by 5-5/64 in. wide, by 2-13/64 in. lg; alloy steel; black finish; Bristolco No. 10, short arm.	Tighten set screws
H205	"for reference only"	WRENCH: multiple spline set screw key; double-ended, L-shaped, No. 8; 3/32 in. dia, by 51/64 in. wide, by 8 in. lg; alloy steel; black finish; Bristolco No. 8, long arm.	Tighten set screws
I201	17-L-6305	LAMP, INCANDESCENT: 6-8 v, 250 ma; miniature bayonet base; T-3-1/4 bulb; Mazda Part No. 44.	Lamp for XI201
I202		Same as I201	Lamp for XI202
I203	17-L-6806-130	LAMP, GLOW: 1/25 watt; 65 v AC, 115 v DC; miniature bayonet base; T-3-1/4 bulb; C-2R electrode; neon gas filled; GE Co, Schenectady, N.Y., Type NE-51.	Lamp for XI203
I301		Same as I201	Lamp for XI301
J101	17-C-73338-3306	CONNECTOR, RECEPTACLE: 28 contacts; single connector mating end; contact data, Sect. A, Ref Dwg Group 206, 28, female contacts, style 10, 10 amps, 920v AC working; arc resistant plastic; straight shape; dim. excluding protruding contacts, 3-3/8 in. lg, 1-11/16 in. wide, 63/64 in. high; non-locking type; no cable accommodation; data regarding "the mfr", Cannon Electric Co., Los Angles, Calif., Part No. DPD-B28-33S-A29, Type L.	Cabinet interconnection receptacle
J102		Same as J101	Interconnection receptacle

TABLE 8-1 TABLE OF REPLACEABLE PARTS (Cont'd)

Reference Symbol	Standard Navy Stock Number	Name and Description	Locating Function
		RADIO TRANSMITTING SET AN/URT-12	
J201	17-C-73641-4988	CONNECTOR, RECEPTACLE: 28 contacts; single connector mating end; contact data, Sect A, Ref Dwg Group 206, 28, male contacts, style 10, 10 amps, 920 v AC, working; arc resistant plastic; straight shape; o/a dim. excluding protruding contacts, 3-3/8 in. lg, 1-11/16 in. wide, 1-7/64 in. high; non-locking type; data regarding "the mfr", Cannon Electric Co., Los Angeles, Calif., Part No. DPD-B28-34P-A29, Type L.	Interconnection receptacle
J301	17-J-39248-4418	JACK, TELEPHONE: for 2 conductor plug; J1 contact arrangement, MBCA Ref Dwg Group 4; JAN Type JJ-034.	KEY jack
J302	17-J-39527-8576	JACK, TELEPHONE: for 2 conductor plug; J7 contact arrangement, MBCA Ref Dwg Group 4; JAN Type JJ-101.	HEADSET jack
J303	17-J-39435-6234	JACK, TELEPHONE: for 3 conductor plug; contact arrangement J2, MBCA Ref Dwg Group 4; 3/8 in. dia mtg hole; JAN Type JJ-033.	MICROPHONE jack
J304		Same as J201	Interconnection receptacle
J305	17-J-40913-3611	JACK ASSEMBLY, TIP: individual tip jack data, 2 contacts, Birnback Radio Co., Tip Jack, Cat. No. 403; plastic mtg frame; o/a dim. excluding terminals, 2-7/8 in. lg, 1-1/4 in. wide, 5/8 in. high, mtg data, panel mounted, two 3/8 in. holes 2-1/4 in. c to c; data regarding "the mfr", Radiomarine Corp of America, Dwg. No. B-32142.	Interchassis connector
J306	17-C-73649-6376	CONNECTOR, RECEPTACLE: 32 contacts; 1 connector mating end; contact data, Sect A, Ref Dwg Group 206, 32, male contacts, style 19, 5 amps, 600 v DC; arc resistant plastic; straight shape; o/a dim. excluding protruding contacts, 3-51/64 in. lg, 7/8 in. wide, 7/8 in. high; non-locking; data regarding a "typical mfr", American Phenolic Corp, Chicago, Ill, Part No. 26-159-32.	Interchassis connector
J401	17-C-73345-5841	CONNECTOR, RECEPTACLE: 32 contacts; 1 connector mating end; contact data, Sect. A, Ref Dwg Group 206, 32, female, style 19, 5 amps, 600 v DC, working; arc resistant plastic; straight shaped; o/a dim., 3-51/64 in. lg, 7/8 in. wide, 27/32 in. high; non-locking type; data regarding a "typical mfr", American Phenolic Corp, Chicago, Ill, Part No. 26-190-32.	Interchassis connector
J402	17-P-63658-4871	PLUG ASSEMBLY, TIP: individual tip plug data, 2 contacts, Bud Radio Inc., Tip plug, Cat, No. PL469; plastic mtg. frame; o/a dim. excluding terminals, 2-3/4 in. lg, 1-1/4 in. wide, 1-3/16 in. high; data regarding "the mfr", Radiomarine Corp. Of America, Dwg. No. B-32141.	Interchassis connector
J403	17-C-73108-5875	CONNECTOR RECEPTACLE: one female round contact; straight type; o/a dim. 1-1/8 in. lg, 1 in. wide, 1 in. high; radio frequency connector; cylindrical w/ square mounting flange; 4 mtg holes .125 in. in dia, located on 23/32 in. by 23/32 in. centers; Army-Navy No. 49194; American Phenolic Corp, Chicago, Ill; No. 83-1R	External M.O. connection

TABLE 8-1 TABLE OF REPLACEABLE PARTS (Cont'd)

Reference Symbol	Standard Navy Stock Number	Name and Description	Locating Function
RADIO TRANSMITTING SET AN/URT-12			
J404		Same as J403	Interconnection cable receptacle
J405		Same as J402	Interchassis connector
J406		Same as J403	Interconnection cable receptacle
K201	17-R-64362-8106	RELAY, ARMATURE: contact data, nonpile-up type, two pole/two throw, single break, dc, 26.5 v DC non-inductive, 10 amps; coil data, 1 inductive winding, ac, 450 ohms ±10% resistance of winding, 115V nom. operating voltage, 5 ma, 60 cycles; over-all dimensions, 2.750 ± .062 in. lg, 2.375 ± .031 in. wide, 1.562 ± .062 in. high; data regarding a "typical mfr", Advance Electric and Relay Co., Burbank, California, Spec. No. 3433-1Y.	High voltage plate contactor
K202		Same as K201	Low voltage plate contactor
K203	17-R-68348-8241	RELAY, MOTOR DRIVEN: SPDT; motor data, ac, synchronous type, 115 v, 60 cyc; 2 term for motor, 2 term for cont, time delay data, adjustable type, 0 to 60 sec time range, 0 to 60 sec dial range; reset facilities are provided; o/a dim., excl term, 3 in. lg, 2-3/4 in. w, 2-9/16 in. h; special features, cont rating, 10 amps, 115 v, ac; Advance Electric and Relay Co, Spec. No. 3019-4.	Plate contact time delay
K204	17-R-63997-7103	RELAY, ARMATURE: contact data, nonpile-up type, 2 PST normally open, single break, dc, 26.5 v non-inductive, 10 amp; coil data, 1 inductive winding, ac, 250 ohms ±10% resistance of winding, 60 V nominal operating voltage, 4 ma, 60 cycles; over-all dim., 2.750 ± .062 in. lg, 2.375 ± .031 in. wide, 1.562 ± .062 in. high; data regarding a "typical mfr", Advance Electric and Relay Co., Burbank, California, Spec. No. 3434Y.	Start-stop relay
K301	17-R-65545-1001	RELAY, ARMATURE: contact data, contact arrangement 1C, MBCA Ref Dwg Group 4; dc, 26.5 v non-inductive winding, dc, 10,000 ohms ±10% resistance of winding, 100 v nom. operating voltage, 1 ma; over-all dim., 1.578 in. lg, 1.313 ± .030 in. wide, 1.375 in. high; data regarding a "typical mfr", Advance Electric and Relay Co., Burbank, California, Spec. No. 3932Y.	Modulator bias protection

TABLE 8-1 TABLE OF REPLACEABLE PARTS (Cont'd)

Reference Symbol	Standard Navy Stock Number	Name and Description	Locating Function
		RADIO TRANSMITTING SET AN/URT-12	
K302	17-R-65262-2455	RELAY, ARMATURE: contact data, contact arrangement 4C, MBCA Ref Dwg Group 4, dc, 26.5 v non-inductive, 2 amps; coil data, 1 winding, 1 inductive winding, dc, 1000 ohms ±10% resistance of winding, 32 v nom operating voltage, 32 ma; over-all dim., 1.563 ± .031 in. lg, 1.313 ± .062 in. wide, 1.563 ± .062 in. high; data regarding a "typical mfr", Advance Electric and Relay Co., Burbank, Calif., Spec. No. 3834Y.	Circuit change-over and keying indication
K303	17-R-64833-5155	RELAY, ARMATURE: contact data, arrangement 1A, Ref Dwg Group 4, ac, dc; coil data, 1 inductive winding, dc, 100 ohms ±10% resistance of winding, 100 ma dc max operating current, 1 inductive winding, dc, 100 ohms ±10% resistance of winding, 12 v operating voltage; over-all dim., 3-1/4 in. lg, 1-1/4 in. wide, 1-5/8 ± 1/32 in. high; data regarding a "typical mfr", Advance Electric and Relay Co., Spec No. 3484Y.	Modulator overload relay
K304		Same as K303	PA overload relay
K401	17-R-65547-5401	RELAY, ARMATURE: contact data, contact arrangement 1C, 1D, MBCA Ref Dwg Group 4, ac, dc, 24 v dc or 115 v ac non-inductive loads, 1.5 amp; coil data, 1 winding, 1 inductive winding, dc, 10,000 ohms ±10% resistance of winding, 100 v operating voltage, 10 ma; over-all dimensions, 1-9/16 ± 1/32 in. lg, 1-5/16 ± 1/16 in. wide, 1-7/16 ± 1/16 in. high; data regarding a "typical mfr", Advance Electric and Relay Co., Burbank, Calif., Spec. No. 3473Y.	Keying relay
K402	17-R-65315-2401	RELAY, ARMATURE: contact data, nonpile-up type, 3 poles, 1 normal open, 2 double-throw, single and double break contacts, dc, 26.5 v non-inductive, 10 amps; coil data, 1 inductive winding, dc, 400 ohms ±10% resistance of winding, 32 v nom operating voltage, 80 ma; over-all dim., 3.937 in. lg., 2.812 in. wide, 1.687 ± .062 in. high; data regarding a "typical mfr", Advance Electric and Relay Co., Burbank, Calif., Spec. No. 3836Y.	Antenna change over
L201	16-R-29190-6875	REACTOR: fixed inductance type; coil data, 8 henries inductance, 250 ma DC, 100 ohms DC resistance; 3 kv rms insulation test voltage, winding to case; dim., MBCA Ref Dwg Group 12, 3-3/4 in. lg, 3-1/2 in. wide, 4-15/16 in. high; gov't spec data, MIL, MIL-T-27; TF1A04YY; data regarding "the mfr", Radiomarine Corp. of America, NYC, Dwg. No. B-207.	Low voltage filter
L202		Same as L201	Low voltage filter
L203	16-R-29952-8277	REACTOR: swinging inductance type; coil data, 7.5 to 34 henries inductance, 250 to 50 ma DC, 85 ohms DC resistance; 5 kv rms insulation test voltage, winding to case; dim., MBCA Ref Dwg Group 12, 4-3/8 in. lg, 5 in. wide, 5 in. high; gov't spec. data, MIL, MIL-T-27, TF1A04YY; data regarding "the mfr", Radiomarine Corporation of America, N.Y.C., Dwg. No. B-206.	High voltage filter

TABLE 8-1 TABLE OF REPLACEABLE PARTS (Cont'd)

Reference Symbol	Standard Navy Stock Number	Name and Description	Locating Function
		RADIO TRANSMITTING SET AN/URT-12	
L204		Same as L201	High voltage filter
L301	16-R-29086-4503	REACTOR: fixed inductance type; coil data, 5 henries inductance, 60 ma DC, 80 ohms DC resistance; 500 v rms insulation test voltage, winding to case; dim., MBCA Ref Dwg Group 12, 1-7/8 in. lg, 1-7/8 in. wide, 2-7/16 in. high; gov't spec data, MIL, MIL-T-27, TF1A04YY; data regarding "the mfr", Radiomarine Corp. of America, N.Y.C., Dwg. No. B-214.	Microphone supply filter
L302	16-R-29873-1032	SATURABLE REACTOR: supply winding data, 110 v, not center tapped, 50 to 60 cycles, single phase, 0.22 amp max. current rating; control winding data, 0.72 ohms ± 15% dc resistance, 1.1 amps max. current rating, 1.1 dc saturation current; case data, hermetically sealed, metal; o/a dim., 2-5/8 in. lg, 2-1/2 in. wide, 3-3/4 ± 1/16 in. high; 4 terminals, solder lug type; data regarding "the mfr", Radiomarine Corp of America, Dwg. No. B-393.	12 volt power supply regulator
L303	16-R-28882-9641	REACTOR: fixed inductance type; coil data, 0.1 henries inductance, 1.2 amps DC, 1.7 ohms DC resistance; 500 v rms hipot voltage; dim., MBCA Ref Dwg Group 12, 3-1/4 in. high, 2-1/2 in. lg, 2-3/16 in. wide; data regarding "the mfr", Radiomarine Corp of America, Dwg. No. B-321.	12 volt filter
L401	16-C-74387-3600	COIL, RADIO FREQUENCY: 3 pie, universal wound; 1 mh, 300 ma, 10 ohms DC resistance; 17/32 in. dia, by 1-7/8 in. lg, excluding two 1/4 in. lg, 6-32 mounting studs; per spec JAN-C-173; grade B per spec 16C38 (Ships); National Co. Inc; Malden, Mass; Part No. R-300ST; per Dwg. No. SD5868.	V401A cathode choke
L402	16-C-74123-5201	COIL, RADIO FREQUENCY: individual winding data, universal wound, 276 turns, no. 30 AWG, single nylon enameled, 470 uh at 790 KC, 12.1 ohms DC resistance, 100 ma; molded phenolic coil form; over-all dim., excluding terminals, 1/2 in. OD, 1/2 in. lg; data regarding "the mfr", Cambridge Thermionic Corp., Cambridge, Mass., Part No. X-2082-12.	V401B plate peaking
L403	16-C-73534-2083	COIL, RADIO FREQUENCY: individual winding data, universal wound, 49 turns, no. 36 AWG, single nylon enameled, 48 uh at 2.5 mc, 3.4 ohms DC resistance; laminat^ thermosetting plastic coil form; over-all dim., excluding terminals and mtg attachments, 1/2 in. OD, 1-1/4 in. lg; data regarding "the mfr", Radiomarine Corp of America, Dwg. No. A-12031, part 2.	V402 grid peaking
L404	16-C-73701-5753	COIL, RADIO FREQUENCY: individual winding data, universal wound, 66 turns, no. 36 AWG, single nylon enameled, 90 uh at 2.5 mc, 4.4 ohms DC resistance; laminated thermosetting plastic coil form; over-all dim., excluding terminals and mtg attachments, 1/2 in. OD, 1-1/4 in. lg; data regarding "the mfr", Radiomarine Corp of America, Dwg. No. A-12031, part 3.	V402 plate peaking

TABLE 8-1 TABLE OF REPLACEABLE PARTS (Cont'd)

Reference Symbol	Standard Navy Stock Number	Name and Description	Locating Function
		RADIO TRANSMITTING SET AN/URT-12	
L405	16-C-73452-5021	COIL, RADIO FREQUENCY: individual winding data, universal wound, 42 turns, No. 36 AWG, single layer wound, 35 uh at 2.5 mc, 2.8 ohms DC resistance; laminated thermosetting plastic coil form; over-all dim., excluding terminal and mtg attachments, 1/2 in. OD, 1-1/4 in. lg; data regarding "the mfr", Radiomarine Corporation of America, NYC, Dwg No. A-12031 Part 1.	V403 grid peaking
L406	16-C-76347-2173	COIL, RADIO FREQUENCY: individual winding data, single layer wound, 13 turns, no. 16 AWG, enamel insulation, 0.008 ohms DC resistance; mica filled bakelite form; over-all dim., excluding terminals, mtg. attachments, and tuning devices, 5/8 in. OD, 1-13/16 in. lg.; data regarding "the mfr", Radiomarine Corp. of America, NYC, Dwg. No. A-11994 part 1.	V403 plate tuning-band 6, and 9
L407	16-C-76378-8408	COIL, RADIO FREQUENCY: individual winding data, single layer wound, 15 turns, no. 18 AWG, enamel insulation, 0.015 ohms DC resistance; mica filled bakelite form; over-all dim., excluding terminals, mtg. attachments, and tuning devices, 5/8 in. OD, 1-13/16 in. lg; data regarding "the mfr", Radiomarine Corp. of America, NYC, Dwg. No. A-11994 part II.	V403 plate tuning-band 5 and 7
L408		Same as L407	V403 plate tuning-band 8
L409	16-C-76503-5925	COIL, RADIO FREQUENCY: individual winding data, single layer wound, 101 turns, no. 34 AWG, enamel insulation, 1.9 ohms DC resistance; ceramic coil form; over-all dim., excluding terminals and mtg. attachments, 1/4 in. dia, 1 in. lg; data regarding "the mfr", Radiomarine Corporation of America, NYC, Dwg. No. A-11995.	V404 grid choke
L410	16-C-72748-6421	COIL, RADIO FREQUENCY: individual winding data, single layer wound, 15 turns, no. 14 AWG, silver plate 0.0005 in. thick, 0.005 ohms DC resistance, tapped at 6-1/4, 9-1/4 turns; laminated thermosetting plastic coil form; over-all dim., excluding terminals and mtg. attachments, 1/2 in. OD, 2-5/8 in. lg; data regarding "the mfr", Radiomarine Corp. of America, NYC, Dwg. No. A-12032.	V404 plate tuning - band 7, 8, and 9
L411	16-C-76391-2164	COIL, RADIO FREQUENCY: individual winding data, single layer wound, 16 turns, no. 18 AWG, enamel insulated, 0.03 ohms DC resistance; mica filled bakelite; over-all dim., excluding terminals, mtg. attachments, and tuning devices, 5/8 in. OD, 1-13/16 in. lg; data regarding "the mfr", Radiomarine Corp. of America, NYC, Dwg. No. A-11994, part 3.	V404 plate tuning-band 6
L412		COIL, RADIO FREQUENCY: individual winding data, single layer wound, 19 turns, no. 20 AWG, enamel insulated, mica filled bakelite; o/a dim., 5/8 in. OD, 1-13/16 in. lg; Radiomarine Dwg No. A-11994, part 4.	V404 plate tuning band 5

TABLE 8-1 TABLE OF REPLACEABLE PARTS (Cont'd)

Reference Symbol	Standard Navy Stock Number	Name and Description	Locating Function
		RADIO TRANSMITTING SET AN/URT-12	
L413	16-C-76445-9707	TRANSFORMER, R F: individual winding data, single layer wound, 31-3/4 turns, no. 20 AWG, enamel insulation, 0.07 ohms DC resistance, tapped at 12-1/8 turns; laminated thermosetting plastic coil form; over-all dim., excluding terminals and mtg. attachments, 3/4 in. OD, 2-1/2 in. lg; data regarding "the mfr", Radiomarine Corp. of America, NYC, Dwg. No. A-12037.	V404 plate tuning-band 3 and 4
L414	16-C-76503-1493	TRANSFORMER, R F: individual winding data; single layer wound, 54-3/4 turns, No. 26 AWG, enamel insulation, 0.5 ohms DC resistance, tapped at 19-7/8 turns; laminated thermosetting plastic coil form; over-all dim., excluding terminals and mtg. attachments, 3/4 in. OD, 2-1/2 in. lg; data regarding "the mfr", Radiomarine Corp., of America, NYC, Dwg. No. A-12036.	V404 plate tuning-band 1 and 2
L415		Same as L401	PA grid choke
L416	16-C-76503-2178	COIL, RADIO FREQUENCY: individual winding data, single layer wound, 62 turns, no. 30 AWG, enamel insulation, 1.3 ohms DC resistance; laminated thermosetting plastic coil form; over-all dim., excluding terminals and mtg. attachments, 3/4 in. OD, 1-7/8 in. lg; data regarding "the mfr", Radiomarine Corp. of America, NYC, Dwg. No. A-12033.	PA grid choke
L417	16-R-29269-8706	REACTOR: fixed inductance type; coil data, 12 henries inductance, 100 ma DC, 550 ohms DC resistance; 1.5 kv rms insulation test voltage winding to case; dim., MBCA Ref Dwg. Group 12, 2-1/2 in. lg, 2-5/8 in. wide, 3-1/4 in. high; gov't spec. MIL, MIL-T-27, TF1A20YY; data regarding "the mfr", Radiomarine Corp. of America, NYC, Dwg. No.B-210.	PA screen choke
L418		Same as L409	PA screen choke
L419	16-C-74394-9401	COIL, RADIO FREQUENCY: individual winding data, 5-pie universal wound, 1 mh inductance at 1 mc, 5.2 ohms dc resistance, 500 ma; steatite coil form; over-all dim., excluding terminals, mtg. attachments and tuning devices, 1-1/16 in. dia., 2-7/8 in. lg; data regarding a "typical mfr", E. F. Johnson Co., Waseca, Minn., Part No. 102-752.	PA plate choke
L420	16-C-73646-2387	COIL, RADIO FREQUENCY: individual winding data, single layer wound, 70 turns, no. 26 AWG, enamel insulation, 0.6 ohms DC resistance; laminated thermosetting plastic coil form; over-all dim., excluding terminals and mtg. attachments, 3/4 in. OD, 2-1/2 in. lg; data regarding "the mfr", Radiomarine Corp. of America, NYC, Dwg. No. A-12035.	PA plate choke
L432		Coil, R.F. 2 turns of 3/16 silver plated copper tubing; terminal mounted by two 5/32 in. drill holes, one on each end Dwg No. A-14100.	PA medium frequency tank circuit

TABLE 8-1 TABLE OF REPLACEABLE PARTS (Cont'd)

Reference Symbol	Standard Navy Stock Number	Name and Description	Locating Function
		RADIO TRANSMITTING SET AN/URT-12	
L421	16-C-73149-6509	COIL, RADIO FREQUENCY: individual winding data, single layer wound, 12-1/2 turns, copper tubing, 3/16 in. OD by .032 in. wall, tapped at 5 and 8 turns; laminated thermosetting plastic coil form; over-all dim., excluding terminals and mtg. attachments, 2-1/16 in. OD, 4-1/2 in. lg; data regarding "the mfr", Radiomarine Corp. of America, NYC, Dwg. No. A-12039.	PA medium frequency tank circuit
L422	16-C-72504-6894	COIL, RADIO FREQUENCY: individual winding data, single layer wound, 34 turns, no. 12 AWG silver plate .0005 in.; 0.014 ohms DC resistance, tapped at 10, 19 and 28 turns; over-all dim., excluding terminals and mtg. attachments, 2 in. OD, 5 in. lg; data regarding "the mfr", Radiomarine Corp. of America, NYC, Dwg. No. A-12040.	PA low frequency tank circuit
L423	16-C-71786-4568	COIL, RADIO FREQUENCY: individual winding data, single layer wound, 4-5/6 turns, copper tubing 1/4 in. OD by.032 in. wall; over-all dim., excluding terminals and mtg. attachments, 2-1/2 in. OD, 2-3/4 in. lg; data regarding "the mfr", Radiomarine Corp. of America, NYC, Dwg. No. A-12041.	PA high frequency tank circuit
L424	"manufacture and assemble locally"	COIL, RADIO FREQUENCY: 1/2 turn, 1/4 in. OD, silver plated copper tubing terminal mounted by 3 mtg holes, one No. 18 drill hole and two No. 7 drill holes; Radiomarine Dwg. No. B-31534.	Link coupling
L425	"manufacture and assemble locally"	COIL, RADIO FREQUENCY: 3-1/2 turns of 3/16 in. OD silver plated copper tubing, tapped at 1-1/2 turns; terminal mounted by 2 No. 25 drill holes; Radiomarine Dwg. No. A-11998.	Antenna tuning coil
L426	16-C-72094-7554	TRANSFORMER, R F: individual winding data, single layer wound, 11 turns, 1/8 in. OD silver plated copper tubing, tapped at 7 turns; laminated thermosetting plastic coil form; over-all dim., excluding terminals and mtg attachments, 2 in. OD, 3-5/8 in. lg; data regarding "the mfr", Radiomarine Corp. of America, NYC, Dwg. No. A-12038.	Antenna tuning coil
L427	16-C-72495-9561	TRANSFORMER, R F: individual winding data, single layer wound, 33-1/2 turns, no. 12 AWG, 0.043 ohms DC resistance, tapped at 8, 15, 20, 25, and 29 turns; ceramic coil form; over-all dim., excluding terminals and mtg. attachments, 3 in. OD, 6 in. lg; data regarding "the mfr", Radiomarine Corp. of America, NYC, Dwg. No. B-31538.	Antenna tuning coil
L428	16-C-76614-6050	COIL, RADIO FREQUENCY: individual winding data, single layer wound, No. 14 AWG, 10 u henries max. inductance; steatite coil form; over-all dim., excluding terminals, mtg. attachments and tuning devices, 4-1/2 in. lg, 2-1/2 in. wide, 2-31/32 in. high; data regarding "the mfr", Radiomarine Corp. of America, NYC, Dwg. No. A-12005.	ANTENNA VERNIER

TABLE 8-1 TABLE OF REPLACEABLE PARTS (Cont'd)

Reference Symbol	Standard Navy Stock Number	Name and Description	Locating Function
		RADIO TRANSMITTING SET AN/URT-12	
L429	16-C-72666-5362	TRANSFORMER, R F: individual winding data, single layer wound, 80 turns, no. 32 AWG, enamel insulation, 2.6 ohms DC resistance, tapped at 38 turns; laminated thermosetting plastic coil form; over-all dim. excluding terminals and mtg attachments, 3/4 in. OD, 2 in. lg; data regarding "the mfr", Radiomarine Corp of America, Dwg. No. A-12034.	V403 plate load on bands 1, 2, 3, 4
L430	"manufacture and assemble locally"	COIL, RADIO FREQUENCY: 2-1/8 turns of No. 10 bare tinned copper wire; one solder lug terminal, one wire lead terminal; Radiomarine Dwg. No. A-11999.	Antenna tuning coil
L431	16-C-72666-8231	COIL, RADIO FREQUENCY: individual winding data, single layer wound, 100 turns, no. 26 AWG, enamel insulation; laminated thermosetting plastic GMG tubing per spec MIL-P-79; over-all dim., excluding terminals and mounting attachments, 3 in. lg, 3/4 in. dia; data regarding "the mfr" Radiomarine Corp of America, Dwg. No. A-12047.	PA plate choke
L-432	Page 8-22		
M301	17-M-19632-1041	AMMETER: round, molded phenolic case for use on non-magnetic panel; 0-50 ma DC; black markings and pointer on white background; shatterproof glass; JAN Type MR25W050DCMA.	P A GRID current
M302	17-M-19806-1051	AMMETER: mounted type, panel mounted; circuit application, DC; scale data, marked "milliamperes", 0 to 300 cw, graduated in increments of 10, marked "DC" ±2% accuracy at full scale reading; sensitivity data, 150 millivolts drop across terminals; 0.16 ohms resistance across terminals; calibrated for use on non-magnetic panel; self-contained; govt spec data, MIL, MIL-M-6A, Type MR25W300DCMA; "typical mfr", Weston Electrical Instrument Corp., Newark, N.J., Type 506.	P A CATHODE current
M303		Same as M302	MOD. CATHODE current
N401 (4 Ea)	"for reference only"	DIAL, SCALE: 0 to 100 divisions plotted on 180 deg. of dia; aluminum black anodize, white lettering; 2-3/4 in. dia; 3 mtg holes 120 deg. apart located on 13/32 in. radius; Radiomarine Dwg. No. A-12008.	p/o P A tuning, I P A tuning, antenna tuning, coupling
N402	"for reference only"	CHART, CALIBRATION: crystal tuning chart; o/a dim. 6-9/32 in. by 3 in.; Radiomarine Dwg. No. A-12000.	Crystal tuning chart
N403	"for reference only"	CHART: operating instructions; laminated thermosetting plastic; o/a dim., 4-1/2 in. lg, 3 in. wide, 3/32 in. thick; Radiomarine Dwg. No. A-12001.	Operating instructions
O201 (2 Ea)	16-K-700350-485	KNOB: phenolic; black; dimensional data, 1-5/8 in. lg over-all, 1-7/16 in. max od, 7/8 in. thk over-all; Radiomarine Dwg No. A-14039.	Knob for S201, S202

TABLE 8-1 TABLE OF REPLACEABLE PARTS (Cont'd)

Reference Symbol	Standard Navy Stock Number	Name and Description	Locating Function
		RADIO TRANSMITTING SET AN/URT-12	
O202 (4 ea)	16-C-300570-863	CLAMP, ELECTRICAL: electron tube clamp, type 302 stainless steel; 3-1/8 in. dia, o/a w/clip in open position, 1-3/8 in. id closed, 3/4 in. high, single mtg. hole for No. 10 machine screw; Birtchers Part No. 926-C-5.	Clamp for V201, V202, V203, V204
O301		Same as O201	Emission selector knob
O302 (2 ea)	16-K-700311-139	KNOB: phenolic; black; dim. data, 1-5/32 in. lg over-all, 1 in. max. od, 5/8 in. thick; with marking, white, depressed marking; data regarding "the mfr", Radio Corp. of America, N.Y.C. Dwg. No. 737820-507.	Head set level and modulation level knobs
O303 (9 ea)	16-C-300559-295	CLAMP: brass, nickel plated; shaft lock; consists of split bushing and lock nut; 5/8 in. lg, by 1/2 in. o/a; for 1/4 in. dia. shaft; James Millen Co., Malden, Mass.; Part No. K10061	Shaft locks for R301, R323, R363, R365, R369, R380, R385, R388, R389
O401 (2 ea)		Same as O202	V404, V405 clamps
O402 (10 ea)	"manufacture and assemble locally"	CLAMP, ELECTRICAL: crystal clamp, phosphor bronze spring, cadmium plated; over-all dim, 11/16 in. lg, by 13/32 in. wide, mounts by a 0.120 in. dia. hole located on the bottom; Radiomarine Dwg. No. A-12076.	Crystal holder clamp
O403 (4 ea)		Same as O201	Crystal switch, band switch, antenna range, and antenna tap knobs
O404 (4 ea)	16-K-700349-674	KNOB: phenolic; black; dim. data, 1-1/2 in. lg, over-all, 1-7/16 in. max. od, 7/8 in. thk over-all; data regarding the mfr, Radio Corp of America, NYC, Dwg. No. 737820-509.	Antenna tuning, IPA tuning, PA tuning, and coupling knobs
O405 (2 ea)		Same as O303	Shaft lock for R437, R446
O406	16-K-700433-325	KNOB: set screw type; round, section A, Ref Dwg Group 186; phenolic, black, w/o markings, over-all dim. 1-5/8 in. lg, 2-3/4 in. dia.; data regarding "the mfr", Radiomarine Corp. of America, NYC, Dwg. No. A-12007.	Antenna vernier knob
O407	"for reference only"	SPROCKET WHEEL: 25 teeth; 1.240 in. od, 1/4 in. bore, 5/8 in. hub diameter; Sierra stud chain sprockets, Sierra Eng. Co. Sierra Madre, Calif., Part No. 9100-25.	Crystal selector drive wheel
O408	"for reference only"	CHAIN, CABLE, PLATE LINK: stainless steel links and pins; 0.072 in. nominal width excluding side plates, o/a width 0.139 in., 0.147 in. long between centers of plates; 170 pounds ultimate strength; Sierra Eng. Co., Sierra Madre, Calif., Part No. 9000-82C.	Connects crystal selector switch

TABLE 8-1 TABLE OF REPLACEABLE PARTS (Cont'd)

Reference Symbol	Standard Navy Stock Number	Name and Description	Locating Function
		RADIO TRANSMITTING SET AN/URT-12	
O409 (4 ea)	16-D-901161-216	DRIVE, TUNING: positioning data, 360 deg. rotation continuous; knob actuated; over-all dim., 1-53/64 in. lg, 2-9/16 in. o/a dia; data regarding "the mfr", Radiomarine Corp. of America, NYC, Dwg. No B-32143.	u/w PA tuning, IPA tuning, antenna tap switch, antenna coupling
O410	18-R-269-15	COUNTER, ROTATING, FIXED MOUNTING: register data, 3 figures, 0.166 in. high, black on metal, non-reset, designed to subtract; operating shaft data, located on right, 100 rpm rated max. speed, cw rotation; 0.1 shaft revolutions required to make one count on register; over-all dimensions, 1-5/16 in. lg, 1-3/8 in. high, 7/8 in. wide; data regarding "typical mfr", Veeder-Root Inc., Hartford, Conn., Type No. A-114133.	Antenna vernier counter
O411 (5 ea)	"for reference only"	DIAL LOCK: black oxide on brass; o/a 1.375 in. lg; mounts by a 10-32 thread 0.375 in. lg. stud; Cambridge Thermionic No. X1552.	Lock for PA tuning, antenna vernier, I.P.A. tuning, coupling control, antenna tuning
O412	"for reference only"	GEAR CASE: right angle switch drive; consisting of one hot tinned centrifuged brass case supporting two stainless steel shafts driven by two nickel plated brass bevel gears; assembly enclosed by nickel plated brass cover plate; 3 in. lg by 2-23/32 in. wide by 3/4 in. high over-all; mts by two 6-32 tapped holes on 7/8 in. mtg/c located on each side; Radiomarine Dwg. No. A-12023.	Antenna band switch coupling
O413	"for reference only"	GEAR CASE: right angle switch drive; consisting of one hot tinned centrifuged brass case supporting two stainless steel shafts driven by two nickel plated brass bevel gears; assembly enclosed by nickel plated brass cover plate; 2-1/4 in. lg by 2-13/32 in. wide by 3/4 in. high over-all; mts by two 6-32 tapped holes on 7/8 in. mtg/c located on each side; Radiomarine Dwg. No. A-12022.	S403 coupling
O414	17-C-98378-3898	COUPLING, FLEXIBLE: formed phos. bronze cad. plated; 1/4 by 1/4 in. bore by 0.320 in. lg, each end; round; 1.094 in. dia by 0.656 in. lg, including bores; two 8-32 tapped holes each end spaced 140 degrees apart on hubs; disc is 1.094 in. OD w/0.375 in. dia. hole; Oak Mfg. Co., Part/Dwg lab 1637-11.	S405 coupling
O415		Same as O414	S402 coupling
O416	42-C-22386-1520	COUPLING, SHAFT , FLEXIBLE, INSULATED: flexible disc coupling type C, exposed set screws; coupling body brass, disc silicone; cromate finish; shaft accommodation data, rd type, 1/4 in. dia; over-all dim., 1-1/8 in. dia, 43/64 in. lg; mounts by 4 set screws, 1/4 in. lg, 8-32 thd; data regarding "the mfr", Oak Mfg. Co., Chicago, Ill, Dwg. lab No. 1637-42.	S405 drive coupling
O417		Same as O416	S455 coupling
O418		Same as O416	S402 coupling

TABLE 8-1 TABLE OF REPLACEABLE PARTS (Cont'd)

Reference Symbol	Standard Navy Stock Number	Name and Description	Locating Function
		RADIO TRANSMITTING SET AN/URT-12	
O419	17-C-98378-4240	COUPLING: slide type shaft connector; shaft opening, 1/4 in. dia. each end; mounting data, 2 set screws each end, 6-32 thd; over-all dim., 7/8 in. lg, ±.010 max, 7/8 in. wide ±.010 max, 7/8 in. high max; material, brass hubs nickel plated, bronze coupling yokes nickel plated, steatite insulating plate; accessories, set screws not incl; data regarding "the mfr", James Millen Mfg. Co. Inc., Dwg. No. K-39006.	C456 coupling
O420		Same as O419	C457 coupling
O421		Same as O416	S403 coupling
O422		Same as O416	C452 coupling
O423	42-C-22386-1500	COUPLING, SHAFT , FLEXIBLE, INSULATED: flexible disc coupling type C, exposed set screws; coupling body brass, disc silicone; nickel finish; shaft accommodation data, rd type, 3/16 in. dia; over-all dim., 1-1/8 in. dia, 43/64 in. lg; mounts by 4 set screws; 1/4 in. lg, 8-32 thd; data regarding "the mfr" Oak Mfg. Co., Chicago, Ill., Dwg. No. 6403-153.	Antenna vernier coupling
O424	"for reference only"	GEAR, BEVEL: brass, 1/4 in. dia bore; 16 teeth, 0.500 in. pitch dia, 5/16 in. lg; mounts by two 4-40 tap holes spaced 90 deg. apart, Radiomarine Dwg. No. A-11892.	Counter drive gear
O425		Same as O424	Counter drive gear
O426		Same as O414	S403A & B coupling
O427		~~Same as O416~~ NOT USED	~~S401 coupling~~
O428		Same as O416	S406 coupling
P101	17-C-71414-5363	CONNECTOR, PLUG: contact data, 1 male, round, nonpolarized; straight type; over-all dim., excluding protruding contacts and terminals, 1-11/16 in. lg, 11/16 in. dia., body data, cylindrical shape, brass, silver plated; mica insert; American Phenolic Corp. Part No. 83-750, Army-Navy No. UG-111/U.	Interconnection plug for external M.O.
R201	16-R-50715-0508	RESISTOR, FIXED, COMPOSITION: 220,000 ohms, ±10% tolerance, 2W; JAN RC42BF224K	Low voltage bleeder
R202		Same as R201	Low voltage bleeder
R203	16-R-50373-042	RESISTOR, FIXED, COMPOSITION: 22,000 ohms, ±10% tolerance, 2 W; JAN RC42BF223K	Low voltage bleeder
R204	16-R-65737-7414	RESISTOR, FIXED, WIREWOUND: 160 ohms, ±5% tolerance, 78 W; JAN RW37G161	T203 primary voltage dropping
R205		Same as R204	T203 primary voltage dropping
R206	16-R-50823-0465	RESISTOR, FIXED, COMPOSITION: 470,000 ohms, ±10% tolerance, 2 W; JAN RC42BF474K	High voltage bleeder
R207		Same as R206	High voltage bleeder
R208		Same as R206	High voltage bleeder

TABLE 8-1 TABLE OF REPLACEABLE PARTS (Cont'd)

Reference Symbol	Standard Navy Stock Number	Name and Description	Locating Function
		RADIO TRANSMITTING SET AN/URT-12	
R209	16-R-50480-811	RESISTOR, FIXED, COMPOSITION: 47,000 ohms, ±10% tolerance, 1/2 W; JAN RC20BF473K	I203 current limiter
R210	16-R-65974-7566	RESISTOR, FIXED, WIREWOUND: 800 ohms, ±5% tolerance, 10 W; JAN RW31G801.	K204 dropping resistor
R301	16-R-87849-4757	RESISTOR, VARIABLE, COMPOSITION: 50,000 ohms, ±10% tolerance, 2 W; JAN RV4ATSD503A	Sidetone adjust
R302	16-R-50129-811	RESISTOR, FIXED, COMPOSITION: 4700 ohms, ±10% tolerance, 1/2 W; JAN RC20BF472K	Sidetone adjust range setting
R303	16-R-88009-4056	RESISTOR, VARIABLE, COMPOSITION: 100,000 ohms, ±10% tolerance, 2W; JAN RV4ATSD104A	Modulator gain adjust
R304	16-R-49626-0501	RESISTOR, FIXED, COMPOSITION: 150 ohms, ±10% tolerance, 2 W; JAN RC42BF151K	Microphone current supply
R305	16-A-98477-1261	ATTENUATOR, VARIABLE: type data, resistive type, unbal "LL" MBCA Ref. Dwg. Group 16, wirewound resistors; impedance data, variable input, 600 ohms output; 2.5 watts power rating on dc source, 10 watts on audio frequency; 0 to 20,000 cycles per sec freq. response; attenuation data, 0 to 30 db range, ±10% tolerance, continuously variable, linear db attenuation for 90% rotation, infinite attenuation approached in last 10% rotation; over-all dim., excluding terminals, 1-21/32 in. dia, 2-3/8 in. lg; data regarding a "typical mfr", Clarostat Mfg. Co., Inc., Dover, New Hampshire, Type No. CIL-58.	HEAD SET LEVEL
R306	16-R-50634-0231	RESISTOR, FIXED, COMPOSITION: 100,000 ohms, ±10% tolerance, 1 W; JAN RC30BF104K	V301 plate load
R307	16-R-50066-811	RESISTOR, FIXED, COMPOSITION: 3300 ohms, ±10% tolerance, 1/2 W JAN RC20BF332K	V301 cathode
R308	16-R-50822-811	RESISTOR, FIXED, COMPOSITION: 470,000 ohms, ±10% tolerance, 1/2 W; JAN RC20BF474K	V301 grid
R309		Same as R308	V301 grid
R310	16-R-50633-0811	RESISTOR, FIXED, COMPOSITION: 100,000 ohms, ±10% tolerance, 1/2 W; RC20BF104K	Mod. gain control range set
R311		Same as R310	Mod. gain control range set
R312	16-R-49464-506	RESISTOR, FIXED, COMPOSITION: 56 ohms, ±10% tolerance, 2 W; JAN RC42BF560K	I301 shunt
R313	16-R-65430-6926	RESISTOR, FIXED, WIREWOUND: 25 ohms, ±5% tolerance, 10 W; JAN RW31G250	I301 voltage dropping
R314	16-R-49428-0231	RESISTOR, FIXED, COMPOSITION: 47 ohms, ±10% tolerance, 1 W; JAN RC30BF470K	K302A time delay
R315		Same as R310	V301 plate

TABLE 8-1 TABLE OF REPLACEABLE PARTS (Cont'd)

Reference Symbol	Standard Navy Stock Number	Name and Description	Locating Function
		RADIO TRANSMITTING SET AN/URT-12	
R316	16-R-50417-811	RESISTOR, FIXED, COMPOSITION: 33,000 ohms, ±10% tolerance, 1/2 W; JAN RC20BF333K	V302A plate high frequency bypasser
R317	16-R-50678-811	RESISTOR, FIXED, COMPOSITION: 150,000 ohms, ±10% tolerance, 1/2 W; JAN RC20BF154K	V302A low frequency compensator
R318		Same as R317	V302A low frequency compensator
R319		Same as R317	V302A low frequency compensator
R320		Same as R317	V302A low frequency compensator
R321	16-R-50714-811	RESISTOR, FIXED, COMPOSITION: 220,000 ohms, ±10% tolerance; 1/2 W; JAN RC20BF224K	V302A grid inverse feedback
R322		Same as R310	Limiter (R323) range set
R323		Same as R301	Limiter adjust
R324		Same as R321	V302A grid
R325	16-R-50156-811	RESISTOR, FIXED. COMPOSITION: 56,000 ohms, ±10% tolerance, 1/2 W; JAN RC20BF563K	Voltage divider
R326		Same as R310	Voltage divider
R327		Same as R310	Voltage divider
R328		Same as R306	V302A plate load
R329		Same as R306	V302B plate load
R330		Same as R306	V302A plate load
R331	16-R-49922-811	RESISTOR, FIXED, COMPOSITION: 1,000 ohms, ±10% tolerance, 1/2 W; JAN RC20BF102K	V302A cathode
R332		Same as R331	V302B cathode
R333		Same as R317	V302B high frequency compensator
R334		Same as R317	V302B high frequency compensator
R335		Same as R317	V302B high frequency compensator
R336		Same as R317	V302B high frequency compensator
R337		Same as R321	V302B grid inverse feedback
R338		Same as R308	V303A grid input

TABLE 8-1 TABLE OF REPLACEABLE PARTS (Cont'd)

Reference Symbol	Standard Navy Stock Number	Name and Description	Locating Function
		RADIO TRANSMITTING SET AN/URT-12	
R339	16-R-50759-0811	RESISTOR, FIXED COMPOSITION: 330,000 ohms, ±10%, 1/2W; JAN RC20BF334K	V302A plate compensator
R340		Same as R321	V302A plate compensator
R341		Same as R308	V303 grid
R342		Same as R308	Range set for R388
R343	16-R-50715-231	RESISTOR, FIXED, COMPOSITION: 220,000 ohms, ±10% tolerance, 1 W; JAN RC30BF224K	V303 plate load
R344	16-R-50012-811	RESISTOR, FIXED, COMPOSITION: 2,200 ohms, ±10% tolerance, 1/2 W; JAN RC20BF222K	V303A cathode
R345		Same as R344	V303B cathode
R346		Same as R343	V303 plate load
R347	16-R-50976-231	RESISTOR, FIXED, COMPOSITION: 1 megohm, ±10% tolerance, 1 W; JAN RC30BF105K	V304A step attenuator
R348		Same as R347	V304A step attenuator
R349		Same as R347	V304A step attenuator
R350		Same as R321	V304A grid
R351		Same as R321	V304B grid
R352	16-R-50823-231	RESISTOR, FIXED, COMPOSITION: 470,000 ohms, ±10% tolerance, 1 W; JAN RC30BF474K	V304A plate load
R353		Same as R321	V304 grid
R354		Same as R352	V304B plate
R355	16-R-50634-0501	RESISTOR, FIXED, COMPOSITION: 100,000 ohms, ±10% tolerance, 2 W; JAN RC42BF104K	V304 plate, audio amplifier dropping resistor
R356		Same as R355	V304 plate, audio amplifier dropping resistor
R357		Same as R321	Inverse feedback to V303A
R358		Same as R316	Inverse feedback to V303A
R359		Same as R321	V305 control grid
R360	16-R-49986-231	RESISTOR, FIXED, COMPOSITION: 1,800 ohms, ±10% tolerance, 1 W; JAN RC30BF182K	V304 cathode
R361		Same as R321	V306 control grid
R362	16-R-50282-811	RESISTOR, FIXED, COMPOSITION: 10,000 ohms, ±10% tolerance, 1/2 W; JAN RC20BF103K	V305, V306 bias filter

TABLE 8-1 TABLE OF REPLACEABLE PARTS (Cont'd)

Reference Symbol	Standard Navy Stock Number	Name and Description	Locating Function
		RADIO TRANSMITTING SET AN/URT-12	
R363	16-R- 90398-8728	RESISTOR, VARIABLE, WIREWOUND: 350 ohms; ±10% tolerance, 25 W; JAN RP101SD351KK.	Modulator bias adjust
R364		Same as R347	Inverse feedback to V303A
R365	16-R-90756-9680	RESISTOR, VARIABLE, WIREWOUND: 1000 ohms, ±10% tolerance, 25 W; JAN RP101SD102KK.	Modulator screen balancing adjust
R366		Same as R347	Inverse feedback to V303A
R367		Same as R347	Inverse feedback to V303A
R368	16-R-66086-6943	RESISTOR, FIXED, WIREWOUND: 1600 ohms, ±5% tolerance, 38 W; JAN RW35G162.	P A plate dropping
R369	16-R- 88339-4711	RESISTOR, VARIABLE, COMPOSITION: 1 megohm, 2 W; JAN RV4ATSD105A.	Keying adjust
R370		Same as R362	Keying adjust range set
R371		Same as R316	Modulator bias protection
R372		Not used	
R373	16-R-65882-6166	RESISTOR, FIXED, WIREWOUND: 500 ohms, ±5% tolerance, 10 W; JAN RW31G501.	-100v bleeder
R374	16-R-66103-7726	RESISTOR, FIXED, WIREWOUND: 2,000 ohms, ±5% tolerance, 10W, JAN RW31G202.	-100v bleeder
R375		Same as R374	K302 voltage dropping
R376	16-R-65935-3700	RESISTOR, FIXED, WIREWOUND: 630 ohms, ±5% tolerance, 10W; JAN RW31G631.	Bias filter for P.A.
R377		Same as R376	-100v bleeder
R378		Same as R376	-100v bleeder
R379	16-R-65781-2826	RESISTOR, FIXED, WIREWOUND: 250 ohms, ±5% tolerance, 10 W; JAN RW31G251.	Modulator bias range set
R380	16-R- 90301-2728	RESISTOR, VARIABLE, WIREWOUND: 200 ohms, ±10% tolerance, 25 W; JAN RP101SD201KK.	Modulator overload adjust
R381	16-R-65495-5606	RESISTOR, FIXED, WIREWOUND: 40 ohms, ±5% tolerance, 10W; JAN RW31G400.	Modulator overload range set
R382	16-R-49707-0499	RESISTOR, FIXED, COMPOSITION: 330 ohms, ±10% tolerance, 2 W; JAN RC42BF331K.	Shunt for R380
R383	16-R-65679-8399	RESISTOR, FIXED, WIREWOUND: 100 ohms, ±5% tolerance, 10W; JAN RW31G101.	12v power supply bleeder
R384		Same as R381	P A overload adjust range set

TABLE 8-1 TABLE OF REPLACEABLE PARTS (Cont'd)

Reference Symbol	Standard Navy Stock Number	Name and Description	Locating Function
RADIO TRANSMITTING SET AN/URT-12			
R385		Same as R380	P A overload adjust
R386		Same as R310	Modulator gain control range set
R387		Same as R308	Keying adjust range set
R388		Same as R303	H. F. adjust
R389		Same as R369	L. F. adjust
R390	16-R-49581-0461	RESISTOR, FIXED, COMPOSITION: 100 ohms ±10% tolerance, 2 W; JAN RC42BF101K.	12 v bleeder
R401		Same as R310	V401A oscillator grid
R402	16-R-50013-0461	RESISTOR, FIXED, COMPOSITION: 2,200 ohms, ±10% tolerance, 2 W; JAN RC42BF222K.	V401A oscillator plate load
R403		Same as R362	V401B amplifier grid resistor
R404		Same as R331	V401B B+ dropping
R405	16-R-50202-0511	RESISTOR, FIXED, COMPOSITION: 6800 ohms, ±10% tolerance, 2 W; JAN RC42BF682K.	V401B amplifier plate load
R406	16-R-49706-811	RESISTOR, FIXED, COMPOSITION: 330 ohms, ±10% tolerance; 1/2 W; JAN RC20BF331K.	V401B cathode
R407		Same as R308	V402 control grid
R408	16-R-49662-0506	RESISTOR, FIXED, COMPOSITION: 220 ohms, ±10% tolerance, 2 W; JAN RC42BF221K.	V402 B+ dropping
R409	16-R-66168-1928	RESISTOR, FIXED, WIREWOUND: 3,100 ohms, ±5% tolerance, 18 W; JAN RW33G312.	V402 plate load
R410	16-R-49842-0501	RESISTOR, FIXED, COMPOSITION: 680 ohms, ±10% tolerance, 2 W; JAN RC42BF681K.	V402 cathode
R411	16-R-50444-811	RESISTOR, FIXED, COMPOSITION: 39,000 ohms, ±10% tolerance; 1/2 W; JAN RC20BF393K.	V401B keying wave shaping
R412	16-R-49923-0531	RESISTOR, FIXED, COMPOSITION: 1,000 ohms, ±10% tolerance; 2 W; JAN RC42BF102K.	V402 screen grid
R413		Same as R410	V402 cathode
R414	16-R-50552-811	RESISTOR, FIXED, COMPOSITION: 68,000 ohms, ±10% tolerance, 1/2 W; JAN RC20BF683K.	V401B keying wave shaping
R415	16-R-66048-5086	RESISTOR, FIXED, WIREWOUND: 1,200 ohms, ±5% tolerance, 10 W; JAN RW31G122.	V402, V403 B+ dropping
R416	16-R-50336-811	RESISTOR, FIXED, COMPOSITION: 15,000 ohms, ±10% tolerance, 1/2 W; JAN RC20BF153K.	L405 loading
R417		Not Used	
R418		Same as R308	V403 grid leak

TABLE 8-1 TABLE OF REPLACEABLE PARTS (Cont'd)

Reference Symbol	Standard Navy Stock Number	Name and Description	Locating Function
		RADIO TRANSMITTING SET AN/URT-12	
R419	16-R- 49428-0496	RESISTOR, FIXED, COMPOSITION: 47 ohms, ±10% tolerance, 2 W; JAN RC42BF470K	V403 parasitic suppressor
R420		Same as R412	V403 cathode
R421		Same as R412	V403 cathode
R422		Same as R409	V401, V402, V403 plate voltage divider
R423	16-R-66251-4196	RESISTOR, FIXED, WIREWOUND: 5,000 ohms, ±5% tolerance, 18 W; JAN RW33G502	V401, V402, V403 plate voltage divider
R424	16-R-65845-7301	RESISTOR, FIXED, WIREWOUND: 400 ohms, ±5% tolerance, 10 W; JAN RW31G401	K402 voltage divider
R425		Same as R314	K402B delay
R426	16-R-50418-483	RESISTOR, FIXED, COMPOSITION: 33,000 ohms, ±10% tolerance, 2 W; JAN RC42BF333K	V404 control grid
R427	16-R-50067-0231	RESISTOR, FIXED, COMPOSITION: 3,300 ohms, ±10% tolerance, 1 W; JAN RC30BF332K	V405 grid
R428		Same as R310	V405 grid
R429		Same as R414	V405 keying voltage divider
R430		Same as R412	L429 loading
R431		Same as R310	V405 key off bias
R432		Same as R203	V404 screen grid voltage divider
R433		Same as R203	V404 screen grid voltage divider
R434		Same as R331	K401 keying current limiter
R435		Same as R416	CR401 voltage divider
R436		Same as R416	CR402 voltage divider
R437		Same as R365	V404 drive control
R438		Same as R317	V404 voltage divider
R439	16-R-66048-8766	RESISTOR, FIXED, WIREWOUND: 1,200 ohms, ±5% tolerance, 18 W; JAN RW33G122	Drive control range set
R440		Same as R439	V404 voltage divider

TABLE 8-1 TABLE OF REPLACEABLE PARTS (Cont'd)

Reference Symbol	Standard Navy Stock Number	Name and Description	Locating Function
		RADIO TRANSMITTING SET AN/URT-12	
R441		Same as R321	V404 voltage divider
R442		Same as R390	V404 plate dropping
R443	16-R-66030-1206	RESISTOR, FIXED, WIREWOUND: 1,000 ohms, ±5% tolerance, 10W; JAN RW31G102.	V406 cathode voltage divider
R444	16-R-49986-0506	RESISTOR, FIXED, COMPOSITION: 1,800 ohms, ±10% tolerance, 2 W; JAN RC42BF182K.	P A grid bias
R445		Same as R443	Cathode voltage divider
R446		Same as R369	V406 control grid
R447		Same as R374	V406 plate load
R448		Same as R373	V406 cathode
R449	16-R-66303-4607	RESISTOR, FIXED, WIREWOUND: 6,300 ohms, ±5% tolerance, 18W; JAN RW33G632.	P A screen dropping
R450		Same as R405	V406 plate
R451		Same as R405	V406 plate
R452		Same as R355	Capacitor discharge
R453		Same as R355	Capacitor discharge
R454	16-R-49427-811	RESISTOR, FIXED, COMPOSITION: 47 ohms, ±10% tolerance, 1/2 W; JAN RC20BF470K.	M.O. input
R455		Same as R308	V405 grid
R456	16-R-66678-7139	RESISTOR, FIXED, WIREWOUND: 80,000 ohms, ±5% tolerance, 166 W; JAN RW39G803.	High voltage bleeder
R457	16-R-49581-0231	RESISTOR, FIXED, COMPOSITION: 100 ohms, ±10% tolerance, 1 W; JAN RC30BF101K.	V407 grid leak
R458		Same as R314	p/o E401
R459		Same as R419	p/o E402
R460		Same as R419	p/o E404
R461		Same as R419	p/o E405
R462	16-R-49320-0231	RESISTOR, FIXED, COMPOSITION: 22 ohms, ±10% tolerance, 1 W; JAN RC30BF220K.	p/o E403

TABLE 8-1 TABLE OF REPLACEABLE PARTS (Cont'd)

Reference Symbol	Standard Navy Stock Number	Name and Description	Locating Function
		RADIO TRANSMITTING SET AN/URT-12	
R463		Same as R462	p/o E406
R464	16-R-49239-0231	RESISTOR, FIXED, COMPOSITION: 10 ohms, ±10% tolerance, 1 W; JAN RC30BF100K.	V403 plate
R465		Same as R462	V403 plate
R466		Same as R381	P A plate isolation
S101	17-S-69218-9281	SWITCH, SENSITIVE: single pole, double throw, 10 amps, 250 v AC; Microswitch No. 2AC3.	Cabinet interlock
S102		Same as S101	Cabinet interlock
S201	17-S-66725-8018	SWITCH, ROTARY: 5 sections; 3 max. no. switching positions possible; 90 deg. positioning increment; contact arrangement data, non-pile-up type, 2 moving contacts, 6 fixed contacts, 2 poles, 3 throws; electrical ratings, ac, dc, max. rated voltage 250 v dc, current rating for nominal load 10 amps ac; non-shorting type contact; physical dimensions, excluding terminals and mtg attachments, 2 in. lg, 1-5/8 in. dia; shaft data, round type, 5/8 in. lg, 1/4 in. dia; data regarding a "typical mfr", Electro Switch Co., Weymouth, Mass., Type P, Style II, part no. C-10227.	TUNE, ADJUST, OPERATE switch
S202	"for reference only"	SWITCH, ROTARY: 2 rotary type sections; common rotary actuator incl; over-all dim., 2-3/8 in. lg, 1-15/16 in. dia., mounts by two 8-32 studs spaced 1-9/16 in. C to C; c/o 2 ceramic wafers, detent and shaft; Radiomarine Dwg. A-230.	LOCAL-REMOTE switch
S202A	17-S-91667-1332	SWITCH SECTION, ROTARY: 4 moving contacts; 8 fixed contacts; 4 poles; steatite ceramic insulation; solid silver alloy; physical dim., excluding terminals 1-15/16 in. dia., 0.180 in. thick; data regarding "the mfr", Radiomarine Corp of America, Dwg. No. A-230 wafer A.	p/o S202
S202B		Same as S202A	p/o S202
S202C	17-D-200001-179	DETENT: provisions for 2 switch positions; non-adjustable stop included; over-all dim., 2-3/8 in. lg, 1-33/64 in. wide, 1-15/16 in. high; data regarding "the mfr", Radiomarine Corp of America, Dwg. No. A-230-detent.	p/o S202
S203	17-S-57538-9155	SWITCH PUSH: DPST and SPST; electrical ratings, ac, dc; o/a dim., 2 in. lg approx, 7/8 in. wide, 3-5/8 in. high; external actuator data, 2 plungers with caps, 1-1/8 in. lg approx; mfr, Radiomarine Corp. of America, Dwg. No. B-31537.	Power supply high voltage shorting switch
S204	17-S-72828-2605	SWITCH, TOGGLE: double pole single throw; o/a dim., 2-7/32 in. lg, 1-21/64 in. wide, 49/64 in. high; 4 solder lug terminals; JAN Type ST52K.	BATTLE SHORT switch
S205		Same as S204	EMERGENCY-LINE switch

TABLE 8-1 TABLE OF REPLACEABLE PARTS (Cont'd)

Reference Symbol	Standard Navy Stock Number	Name and Description	Locating Function
		RADIO TRANSMITTING SET AN/URT-12	
S206	17-S-70412-4406	SWITCH, TOGGLE: single pole single throw; 30 v DC, 2 amps; black plastic case; o/a dim., excluding terminals, 1-9/64 in. lg, 41/64 in. wide, 1-1/16 in. high; bat handle 11/16 in. lg. beyond bushing; 2 solder lug terminals on back; JAN Type ST42A.	PLATE ON-OFF switch
S207	17-S-58644-4501	SWITCH, PUSH: cont arrangement, 2 position, SPST, SPST: electrical rating, ac, dc, 550 v, 3 amps for nom. load, 10 amps for inductive load; momentary action, normally open; o/a dim., excl term and external actuator, 2-9/16 in. lg, 1-3/4 in. wide, 1-5/8 in. high; external actuator data, plunger rod type, 3/8 in. w/switch in normal position; "typical mfr" Cutler-Hammer, Inc, part no. 6881ED70.	START-STOP switch
S301	17-S-71894-1544	SWITCH, TOGGLE: o/a dim., 2-1/4 in. lg, 1-1/8 in. wide, 5/8 in. high; solder lug terminals; JAN Type ST42D	LIMITER IN-OUT switch
S302	17-S-72396-1685	SWITCH, TOGGLE: o/a dim. 2-1/4 in. lg, 1-1/8 in. wide, 5/8 in. high; solder lug terminals, JAN Type ST42H.	TEST KEY
S303	"for reference only"	SWITCH, ROTARY: 2 rotary type sections; common rotary actuator incl; over-all dim., 3-7/16 in. lg, 2-3/4 in. wide, 3-5/16 in. high; mounts by two 8-32 studs located on opposite ends spaced 180 deg. apart on 2-7/8 in. centers; one ceramic wafer, one Oak type DHC wafer mounted on rear; Radiomarine Dwg. B-31562.	EMISSION switch
S303A	17-S-91635-1153	SWITCH SECTION, ROTARY: 2 moving contacts; 4 fixed contacts; 2 poles; no dummy terminals; ceramic insulation; solid silver; physical dim., excluding terminals, 3-5/16 in. major dia., 2-3/4 in. minor dia., 1/4 in. thick; data regarding "the mfr", Radiomarine Corp. of America, Dwg No. B-31562-A.	p/o S303
S303B	17-S-91675-1027	SWITCH SECTION, ROTARY: 3 moving contacts; 9 fixed contacts; 3 poles; no dummy terminals; steatite - ceramic insulation; brass contacts; silver plated contact finish; physical dim., excluding terminals, 1-15/16 in. dia., 0.180 in. thick; data regarding "the mfr", Radiomarine Corp. of America, Dwg. No. B-31562-B.	p/o S303
S304	17-S-70412-3664	SWITCH, TOGGLE: o/a dim., 2-1/4 in. lg, 1-1/8 in. wide, 5/8 in. high; solder lug terminals; JAN Type ST42C.	O.L. RESET
S401	"for reference only"	SWITCH, ROTARY: 1 rotary type section; common rotary actuator incl; over-all dim., 1-1/2 in. lg, 1-15/16 in. dia; mounts by two 8-32 studs spaced 1-9/16 in. C to C; c/o 1 ceramic wafer, detent and shaft; Radiomarine Dwg. A-229.	CRYSTAL SWITCH

TABLE 8-1 TABLE OF REPLACEABLE PARTS (Cont'd)

Reference Symbol	Standard Navy Stock Number	Name and Description	Locating Function
		RADIO TRANSMITTING SET AN/URT-12	
S401A	17-S-91699-1026	SWITCH SECTION, ROTARY: 1 moving contact; 12 fixed contacts; 1 pole; no dummy terminals; steatite ceramic insulation; solid silver alloy; physical dim., excluding terminals, 1-15/16 in. dia., 0.180 in. thick; data regarding "the mfr" Radiomarine Corp of America, Dwg. No. A-229, Wafer A.	p/o S401
S401B	17-D-200001-178	DETENT: provisions for 11 switch positions; non-adjustable stop included; over-all dim., 1-11/16 in. lg, 1-33/64 in. wide, 1-15/16 in. high; data regarding "the mfr" Radiomarine Corp of America, Dwg. No. A-229-detent.	p/o S401
S402	"for reference only"	SWITCH, ROTARY: 4 rotary type sections; common rotary actuator incl; over-all dim., 7-11/32 in. lg, 1-15/16 in. dia; mounts by two 8-32 studs spaced 1-9/16 in. C to C; c/o 4 ceramic wafers, detent and shaft; Radiomarine Dwg. A-231.	BAND SWITCH
S402A	17-S-91643-1411	SWITCH SECTION, ROTARY: 2 moving contacts; 6 fixed contacts; no dummy terminals, steatite ceramic insulation; solid silver alloy; physical dim., excluding terminals, 1-15/16 in. dia., 0.180 in. thick; data regarding "the mfr" Radiomarine Corp. of America, Dwg. No. A-231, wafer A	p/o S402
S402B	17-S-91713-1004	SWITCH SECTION, ROTARY: 4 moving contacts; 17 fixed contacts; 3 poles; no dummy terminals; steatite ceramic insulation; solid silver alloy; physical dim., excluding terminals, 1-15/16 in. dia., 0.180 in. thick; data regarding "the mfr", Radiomarine Corp of America, Dwg. No. A-231, wafer B.	p/o S402
S402C	17-S-91675-1029	SWITCH SECTION, ROTARY: 1 moving contact; 9 fixed contacts; no dummy terminals; steatite ceramic insulation; physical dim., excluding terminals, 1-15/16 in. dia, 0.180 in. thick; data regarding "the mfr" Radiomarine Corp of America, Dwg. No. A-231, wafer C.	p/o S402
S402D	17-S-91699-1027	SWITCH SECTION, ROTARY: 2 moving contacts; 12 fixed contacts; no dummy terminals; steatite ceramic insulation; solid silver alloy; physical dim., excluding terminals, 1-15/16 in. dia., 0.180 in. thick; data regarding'the mfr", Radiomarine Corp of America, Dwg. No. A-231, wafer D.	p/o S402
S402E	17-D-200001-180	DETENT: provisions for 9 switch positions; non-adjustable stop included; over-all dim., 7-15/32 in. lg, 1-33/64 in. wide, 1-15/16 in. high; data regarding "the mfr" Radiomarine Corp. of America, Dwg. No. A-231-detent.	p/o S402

TABLE 8-1 TABLE OF REPLACEABLE PARTS (Cont'd)

Reference Symbol	Standard Navy Stock Number	Name and Description	Locating Function
		RADIO TRANSMITTING SET AN/URT-12	
S403	"for reference only"	SWITCH, ROTARY: sectional type, 2 sections; 9 max. number of switching positions; 2 moving contacts, 20 fixed contacts; o/a dim., MBCA Ref Dwg Group 8, 3-5/16 in. lg, 2-5/8 in. wide, 3-3/8 in. high; 1/4 in. dia. stainless steel shaft extends 1/2 in. front of switch; solder lug terminals; Radiomarine Dwg. C-40823.	Band selector
S403A	17-S-91675-1028	SWITCH SECTION, ROTARY: 1 moving contact; 9 fixed contacts, 1 pole; solid silver contacts; physical dim., excluding terminals, 3-5/16 in. major dia., 2-3/4 in. minor dia., 1/4 in. thick; data regarding "the mfr", Radiomarine Corp of America, Dwg. No. C-40823-A.	PA plate tuning capacitor switch
S403B	17-S-91683-1152	SWITCH SECTION, ROTARY: 1 moving contact; 10 fixed contacts; ceramic insulation; solid silver contacts; physical dim., excluding terminals, 3-5/16 in. major dia., 2-3/4 in. minor dia., 1/4 in. thick; data regarding "the mfr", Radiomarine Corp of America, Dwg. No. C-40823-B.	PA plate choke switch
S404	"for reference only"	SWITCH, ROTARY: sectional type, 1 section; 9 max. number of switching positions; 1 moving contact; 11 fixed contacts; o/a dim. MBCA Ref Dwg Group 8, 2-7/16 in. lg, 2-3/4 in. wide, 3-5/16 in. high; 1/4 in. dia stainless steel shaft extends 11/16 in. on front of switch, extends 2-1/8 in. on rear of switch; solder lug terminals; Radiomarine Dwg. No. B-31561.	PA tuning coil selector
S404A	17-S-91691-1020	SWITCH SECTION, ROTARY: 1 moving contact; 11 fixed contacts; 1 pole; ceramic insulation; solid silver contacts; physical dim., excluding terminals, 3-5/16 in. major dia., 2-3/4 in. minor dia., 1/4 in. thick; data regarding "the mfr", Radiomarine Corp of America, Dwg. No. B-31561-A.	P A. tuning coil selector p/o S404
S404B	17-D-200001-177	DETENT: provisions for 9 switch positions; adjustable stop, adjustable for all positions; over-all dimensions, 4-1/4 in. lg, 2-3/4 in. minor dia., 3-5/16 in. major dia.; data regarding "the mfr", Radiomarine Corp of America, Dwg. No. B-31561-Detent.	p/o S404
S405	"for reference only"	SWITCH ROTARY: 3 rotary type sections; common rotary actuator included; over-all dim., 4-1/4 in. lg, 2-3/4 in. wide, 3-5/16 in. high; mounts by two 8-32 studs located on opposite ends spaced 180 deg. apart on 2-7/8 in. centers; three ceramic wafers mounted on a common actuator; Radiomarine Dwg. No. B-31563.	ANTENNA RANGE switch

TABLE 8-1 TABLE OF REPLACEABLE PARTS (Cont'd)

Reference Symbol	Standard Navy Stock Number	Name and Description	Locating Function
		RADIO TRANSMITTING SET AN/URT-12	
S405A	17-S-91660-5925	SWITCH SECTION, ROTARY: 1 moving contact; 7 fixed contacts; 1 pole; ceramic insulation; solid silver contacts; physical dim., excluding terminals; 3-5/16 in. major dia., 2-3/4 in. minor dia., 1/4 in. thick; data regarding "the mfr", Radiomarine Corp. of America, NYC, Dwg. No. B-31563-A.	Antenna tuning coil selector p/o S405
S405B	17-S-91691-1021	SWITCH SECTION, ROTARY: 1 moving contact; 11 fixed contacts; 1 pole; ceramic insulation; solid silver contacts; physical dim., excluding terminals, 3-5/16 in. major dia, 2-3/4 in. minor dia, 1/4 in. thick; data regarding "the mfr", Radiomarine Corp. of America, NYC, Dwg. No. B-31563-B.	Antenna tuning coil selector p/o S405
S405C	17-S-91635-1152	SWITCH SECTION, ROTARY: 1 moving contact; 4 fixed contacts; 1 pole; steatite ceramic insulation; brass contacts; silver plated contact finish; physical dim., excluding terminals, 1-15/16 in. dia, 0.180 in. thick; data regarding "the mfr", Radiomarine Corp. of America, NYC, Dwg. No. B-31563-C.	Switching interlock p/o S405
S406	"for reference only"	SWITCH, ROTARY: 4 rotary type sections; common rotary actuator incl: over-all dim., 5-3/4 in. lg, 2-3/4 in. wide, 3-5/16 in. high; mounts by two 8-32 studs located on opposite ends spaced 180 deg. apart on 2-7/8 in. centers; 3 ceramic wafers, one Oak Type DHC wafer mounted on rear; Radiomarine Dwg. No. B-31564.	ANTENNA TAP switch
S406A	17-S-91618-9552	SWITCH SECTION, ROTARY: 1 moving contact; 2 fixed contacts; 1 pole; ceramic insulation; solid silver contacts; physical dim., excluding terminals, 3-5/16 in. major dia., 2-3/4 in. minor dia., 1/4 in. thick; data regarding "the mfr", Radiomarine Corp. of America, NYC, Dwg. No. B-31564-A.	Antenna tuning coil selector p/o S406
S406B	17-S-91691-1022	SWITCH SECTION, ROTARY: 1 moving contact; 11 fixed contacts; 1 pole; ceramic insulation; solid silver contacts; physical dim., excluding terminals; 3-5/16 in. major dia., 2-3/4 in. minor dia., 1/4 in. thick; data regarding "the mfr", Radiomarine Corp. of America, NYC, Dwg. No. B-31564-B.	Antenna tuning coil selector p/o S406
S406C	17-S-91691-1023	SWITCH SECTION, ROTARY: 1 moving contact; 11 fixed contacts; 1 pole; ceramic insulation; solid silver contacts; physical dim., excluding terminals, 3-5/16 in. major dia., 2-3/4 in. minor dia., 1/4 in. thick; data regarding "the mfr", Radiomarine Corp. of America, Dwg. No. B-31564-C.	Selector for C457 p/o S406
S406D		Same as S405C	Switching interlock p/o S406

TABLE 8-1 TABLE OF REPLACEABLE PARTS (Cont'd)

Reference Symbol	Standard Navy Stock Number	Name and Description	Locating Function
		RADIO TRANSMITTING SET AN/URT-12	
T201	17-T-77378-3002	TRANSFORMER (1),POWER, STEP-UP: case data, hermetically sealed, fully inclosed, metal case; primary windings data, 115 V, 50/60 cycle, single phase, 115 V, 50/60 cycle, single phase; secondary winding data, 1660 V, center tapped, 0.25 amp; 1000 V rms insulation test voltage primary to case, 1000 V rms insulation test voltage primary #1 to primary #2, 3000 V rms insulation test voltage secondary to case, 3500 V rms insulation test voltage primary to secondary; air cooled; impregnated; dim., MBCA Ref. Dwg. Group 12, 5-7/8 in. lg, 4-3/4 in. wide, 5-1/4 in. high; gov't spec data, MIL, MIL-T-27, TF1A02YY; data regarding "the mfr", Radiomarine Corp. of America, NYC, Dwg. No. B-204.	Low voltage power supply
T202	17-T-70678-7760	TRANSFORMER (1),POWER, STEP-DOWN: case data, hermetically sealed, fully inclosed, metal case; primary winding data, 115 V, 50/60 cycle, single phase; secondary windings data, 5.0 V, center tapped, 4.0 amp, 2.5 V, center tapped, 10.0 amp; 500 V rms insulation test voltage primary to case, 5000 V rms insulation test voltage secondaries #1 and #2 to case, 5000 V rms insulation test voltage secondaries #1 and #2 to primary, 5000 V rms insulation test voltage secondary #1 to secondary #2; air cooled; impregnated; dim., MBCA Ref. Dwg. Group 12, 3-3/8 in. lg, 3-1/4 in. wide,4-23/32in. high; gov't spec data, MIL, MIL-T-27, TF1A01YY; data regarding "the mfr", Radiomarine Corporation of America, NYC, Dwg. No. B-203.	Filament supply for V201, V202, V203, V204
T203	17-T-77384-3236	TRANSFORMER (1), POWER, STEP-UP: case data, hermetically sealed, fully inclosed, metal case; primary windings data, #1 primary winding, 115 V, 50/60 cycle, single phase, #2 primary winding, 115 V, 50/60 cycle, single phase; secondary winding data, 3500 V, center tapped, 0.25 amp; 1000 V rms insulation test voltage primary to case, 1000 V rms insulation test voltage primary #1 to primary #2, 5000 V rms insulation test voltage secondary to case, 5000 V rms insulation test voltage primary to secondary; air cooled; impregnated; dim., MBCA Ref. Dwg. Group 12 5-7/8 in. lg, 4-3/4 in. wide, 6-5/8 in. high; gov't spec data, MIL, MIL-T-27, TF1A02YY; data regarding "the mfr", Radiomarine Corp. of America, NYC, Dwg. No. B-205.	High voltage plate supply
T301	17-T-60967-5250	TRANSFORMER (1), AUDIO FREQUENCY: input type; impedance data, primary windings impedance, 600 ohm over-all impedance, 120 ohm over-all impedance, secondary winding impedance, 120,000 ohms over-all impedance; direct current ratings, 50 ma primary; 500 V rms insulation test voltage each winding to case, 500 V rms insulation test voltage between windings; over-all dim., MBCA Ref. Dwg. Group 12, 1-5/8 in. lg, 1-7/16 in. wide, 1-7/8 in. high; frequency data, 200 to 2500 cycle frequency range, ± 1 db over frequency range; gov't spec data, MIL, MIL-T-27, TF1A11YY; data regarding "the mfr", Radiomarine Corp. of America, NY Dwg. No. B-211.	Microphone transformer

TABLE 8-1 TABLE OF REPLACEABLE PARTS (Cont'd)

Reference Symbol	Standard Navy Stock Number	Name and Description	Locating Function
		RADIO TRANSMITTING SET AN/URT-12	
T302	17-T-63298-6562	TRANSFORMER (1), AUDIO FREQUENCY: modulation type; impedance data, primary winding impedance, 14,000 ohms over-all impedance, center tapped, secondary winding impedance, 12,000 ohms over-all impedance; direct current ratings, zero signal current 15 ma each half primary, max signal current 90 ma each half primary, 120 ma secondary; over-all dim., MBCA Ref. Dwg. Group 12, 5-7/8 in. lg, 4-3/4 in. wide, 5-5/8 in. high; 90 W max audio operating level; frequency data, 200 to 2500 cycles frequency range, ±1 db over frequency range; gov't spec data, MIL, MIL-T-27, TF1A14YY; data regarding "the mfr", Radiomarine Corp. of America, NYC, Dwg. No. B-208.	Modulation transformer
T303	17-T-71450-3328	TRANSFORMER (1), POWER, STEP-DOWN: case data, hermetically sealed, fully inclosed, metal case; primary winding data, 65 V, 60 cycle, single phase; secondary winding data, 20 V, 1.22 amp; 500 insulation test voltage; air cooled; impregnated; dim., MBCA Ref. Dwg. Group 12, 2-5/8 in. lg, 2-1/2 in. wide, 3-1/4 in. high; data regarding "the mfr", Radiomarine Corp. of America, NYC, Dwg. No. B-394.	12 volt power supply transformer
T304	17-T-70713-8661	TRANSFORMER (1), POWER, STEP-DOWN: case data, hermetically sealed, fully inclosed, metal case; primary winding data, 115 V, 50/60 cycles, single phase; secondary windings data, 6.2 V, center tapped, 7.2 amp, 6.2 V, center tapped, 7.2 amp, 6.4 V, 4.75 amp; 500 V rms insulation test voltage primary to case, 500 V rms insulation test voltage each secondary to case, 500 V rms insulation test voltage primary to each secondary, 500 V rms insulation test voltage secondaries #1 to #2 to #3; air cooled; impregnated; dim., MBCA Ref. Dwg. Group 12, 3-3/4 in. lg, 3-1/2 in. wide, 5-3/32 in. high; gov't spec data, MIL, MIL-T-27, TF1A01YY; data regarding "the mfr", Kenyon Transformer Co., Part No. S-28551, per Radiomarine Dwg. B-202.	Filament supply
TB101	"for reference only"	TERMINAL BOARD: melamine body, 15 double screw terminals, barrier type; 7-5/16 in. lg, 1-1/8 in. wide, 1/2 in. high; H.B. Jones, Chicago, Ill, Code No. 15-141B.	Terminal points
TB102	"for reference only"	TERMINAL BOARD: melamine body, 12 double screw terminals, barrier type; 6 in. lg, 1-1/8 in. wide, 1/2 in. high; H.B. Jones, Chicago, Ill, Code No. 12-141B.	Terminal points
TB201	"for reference only"	TERMINAL BOARD: melamine body, 2 double screw terminals, barrier type; 1-5/8 in. lg, 1-1/8 in. wide, 1/2 in. high; H.B. Jones, Chicago, Ill, Code No. 2-141B.	Interlock test terminal points

TABLE 8-1 TABLE OF REPLACEABLE PARTS (Cont'd)

Reference Symbol	Standard Navy Stock Number	Name and Description	Locating Function
		RADIO TRANSMITTING SET AN/URT-12	
TB401	"for reference only"	TERMINAL BOARD: melamine body, 6 solder lug terminals; barrier type; 3-3/8 in. lg, 1-1/8 in. wide, 1/2 in. high; H. B. Jones, Chicago, Ill, Code No. 6-141YB.	Terminal points
TB402	"for reference only"	TERMINAL BOARD: melamine body, 2 solder lug term; barrier type; 1-5/8 in. lg., 1-1/8 in. wide, 1/2 in. high; H.B. Jones, No. 2-141YB.	I P A cathode current check points
TB403	"for reference only"	TERMINAL BOARD: melamine body, 4 double screw terminals, barrier type; 2-1/2 in. lg, 1-1/8 in. wide, 1/2 in. high; H. B. Jones, Chicago, Ill, Code No. 4-141B.	Blower connection terminal points
TB404	"manufacture and assemble locally"	TERMINAL BOARD: laminated thermosetting plastic; 13 solder terminal, feed-thru type; 4-3/8 in. lg, by 1-1/2 in. wide, mounts by four No. 30 drill holes, located on 4 in. by 1 in. centers; Radiomarine Dwg. No. A-12016.	Terminal points
V201	16-T-55446-0000	ELECTRON TUBE: full wave rectifier, JAN Type 5R4WGY.	Low voltage rectifier
V202		Same as V201	Low voltage rectifier
V203	16-T-53228	ELECTRON TUBE: half wave rectifier; JAN Type 3B28.	High voltage rectifier
V204		Same as V203	High voltage rectifier
V301	16-T-58241-60	ELECTRON TUBE: miniature twin triode; JAN Type 12AX7.	Limiter
V302	16-T-58240-10	ELECTRON TUBE: miniature twin triode; JAN Type 12AT7.	Audio compensator
V303		Same as V301	Audio amplifier and phase inverter
V304		Same as V301	Audio driver
V305	16-T-54048	ELECTRON TUBE: transmitting tetrode; JAN Type 4-65A.	Modulator
V306		Same as V305	Modulator
V401		Same as V302	Oscillator amplifier
V402	16-T-76005	ELECTRON TUBE: miniature beam power amplifier; JAN Type 6005/6AQ5W.	RF amplifier
V403		Same as V402	Amplifier multiplier
V404	16-T-68070-000	ELECTRON TUBE: transmitting pentode amplifier; JAN Type No. 807.	Amplifier multiplier

TABLE 8-1 TABLE OF REPLACEABLE PARTS (Cont'd)

Reference Symbol	Standard Navy Stock Number	Name and Description	Locating Function
		RADIO TRANSMITTING SET AN/URT-12	
V405	16-T-56213	ELECTRON TUBE: beam power amplifier; JAN Type No. 6BG6G.	Keying tube
V406		Same as V402.	V407, V408 Screen grid clamper
V407		Same as V305	Power amplifier
V408		Same as V305	Power amplifier
W101	17-C-48898-8455	CABLE ASSEMBLY, SPECIAL PURPOSE, ELECTRICAL: cable data, 28 conductors, conductors data, 28, stranded, 16 AWG, synthetic resin insulation, material of outermost covering black vinyl plastic, type identification, AN, Type No. SRIR-2-1/2(19)-16-8; dim. data, length data, over-all length (including terminations), 24 in., length (excluding terminations) approx. 21-1/2 in., over-all cross section of cable 0.945 in.; termination data, terminal fittings on first end, 1, Cannon Electric, Cannon plug, DPD-B28-34P-(A29) type L including bell No. 19745-1-(A29), terminal fittings on second end, 1, Cannon Electric, Cannon socket, DPD-B28-33S-(A29) type L including two bells No. 19745-1-(A29); data regarding "the mfr", Radiomarine Corp of America, Dwg. No. B-31532.	Test cable
W102	17-C-48899-7125	CABLE ASSEMBLY, SPECIAL PURPOSE, ELECTRICAL: cable data, 30, conductors data, 28, stranded, 20 AWG, synthetic resin insulation, 2 stranded, 16 AWG, synthetic resin insulation, material of outermost covering black vinyl plastic, type identification, AN, Type No. SRIR-1(7)-20-8, AN, Type No. SRIR-2-1/2(19)-16-8; dim. data, length data, over-all length (including terminations) approx. 49 in., length (excluding terminations) approx. 47 in., over-all cross section of cable .55 in.; termination data, terminal fitting on first end, 1, American Phenolic Corp., plug, No. 26-159-32, 1, H.B. Jones, Cable clamp, No. 61-1/2,1, Radiomarine Corp of America, cover, Dwg. No. B-31565, terminal fitting on second end, 1, American Phenolic Corp., receptacle, No. 23-190-32, 1, H. B. Jones, Cable clamp, No. 61-1/2, 1, Radiomarine Corp. of America, Cover, Dwg. No. B-31565; data regarding "the mfr", Radiomarine Corp of America, Dwg. No. B-31533.	Test cable
XF201	17-F-74269-8401	FUSEHOLDER: extractor post type; molded bakelite, transparent knob; o/a dim. 1-13/16 in. high, 1-13/16 in. wide, 2-7/16 in. lg; two 11/64 in. dia. mtg. holes located on 1-5/16 in. mtg./c; 2 solder lug terminals; Bussmann Mfg. Co., St. Louis, Mo.; Type HPC-C.	F201 holder
XF202		Same as XF201	F202 holder
XF203		Same as XF201	F203 holder
XF204		Same as XF201	F204 holder
XF205		Same as XF201	F205 holder
XF206		Same as XF201	F206 holder

TABLE 8-1 TABLE OF REPLACEABLE PARTS (Cont'd)

Reference Symbol	Standard Navy Stock Number	Name and Description	Locating Function
		RADIO TRANSMITTING SET AN/URT-12	
XF207		Same as XF201	F207 holder
XF208		Same as XF201	F208 holder
XF209	17-C-804593-451	CLIP, ELECTRICAL: ferrule style 2, Ref Dwg Group 37; phosphor bronze; nickel plated; dim. as indicated in Ref Dwg Group 37, 3/4 in. thk, 15/32 in. wide, 3/8 in. lg; data regarding "the mfr", Bussmann Mfg. Co., St. Louis, Mo., Part No. 4551	F209 holder
XF210		Same as XF209	F210 holder
XF211		Same as XF209	F211 holder
XF212		Same as XF209	F212 holder
XF213		Same as XF209	F213 holder
XF214		Same as XF209	F214 holder
XF215		Same as XF209	F215 holder
XF216		Same as XF209	F216 holder
XI201	17-L-76854-4339	LIGHT, INDICATOR: lens data, supplied w/ lens, 1/2 in. dia., red, characteristic of lens surface, smooth face, frosted back, translucent, screw cap lens holder lamp data, 1, T-3-1/4, MBCA Ref. Dwg. Group 7, Fig. 4, miniature bayonet base, MBCA Ref. Dwg. Group 7, lamp not incl; dimming feature incl, mechanical shutter type, adjustable to complete blackout; lampholder data, lamp replaceable from front of panel; data regarding "the mfr", The Dial Light Co. of America, NYC, Type No. 12B410-111.	Plate on indicator
XI202	17-L-76737-2821	LIGHT, INDICATOR: lens data, supplied w/ lens, 1/2 in. dia, white, characteristic of lens surface, smooth face, frosted back, translucent, screw cap lens holder; lamp data, 1, T-3-1/4, MBCA Ref. Dwg. Group 7, Fig. 4, miniature bayonet base, MBCA Ref. Dwg. Group 7; dimming feature incl, mechanical shutter type, adjustable to complete blackout; electrical rating 125 V, 75 watts; over-all dim., 2-5/16 in. lg, 15/16 in. dia; lampholder data, lamp replaceable from front of panel; data regarding "the mfr", The Dial Light Co. of America, NYC, Type No. 12B410-117.	Filament on indicator
XI203	17-L-76730-2275	LIGHT, INDICATOR: lens data, supplied w/ lens, 1/2 in. dia, colorless, characteristic of lens surface, smooth face, smooth back, clear, screw type lens; lamp data, 1, T-3, MBCA Ref. Dwg. Group 7, fig. 4, miniature bayonet base, MBCA Ref. Dwg. Group 7; over-all dim., 2-1/8 in. lg, 25/32 in. dia; lampholder data, lamp replaceable from front of panel; data regarding "the mfr", Dial Light Co. of America, NYC, Type No. 91410-937.	Interlocking short indicator

TABLE 8-1 TABLE OF REPLACEABLE PARTS (Cont'd)

Reference Symbol	Standard Navy Stock Number	Name and Description	Locating Function
		RADIO TRANSMITTING SET AN/URT-12	
XI301	17-L-76768-1670	LIGHT, INDICATOR: lens data, supplied w/ lens, 1/2 in. dia, green, characteristic of lens surface, smooth face, frosted back, translucent, screw cap lens holder; lamp data, 1,T-3-1/4, MBCA Ref. Dwg. Group 7, Fig. 4, miniature bayonet base, MBCA Ref. Dwg. Group 7; dimming feature incl, mechanical shutter type, adjustable to complete black-out; over-all dim., 2-3/8 in. lg, 25/32 in. dia; lamp-holder data, lamp replaceable from front of panel; data regarding "the mfr", The Dial Light Co. of America, NYC, Type No. 12B410-112.	Carrier on indicator
XV201	16-S-63471-2923	SOCKET, ELECTRON TUBE: contact data, 8 contacts, brass, cadmium plated; medium; over-all dim., excluding terminals, 2-5/16 in. lg, 1-11/16 in. wide, 3/16 in. high; data regarding a "typical mfr", E. F. Johnson Co., Waseca, Minn., Part No. 122-228-200.	Mtg for V201
XV202		Same as XV201	Mtg for V202
XV203	16-S-60853-7511	SOCKET, ELECTRON TUBE: contact data, 4 contacts, phosphor bronze, silver plated; small; over-all dim., excluding terminals, 2-5/32 in. lg, 1-3/8 in. wide, 21/32 in. high; data regarding a "typical mfr", James Millen Mfg. Co. Inc., Malden, Mass., Type No. CJA-49368.	Mtg for V203
XV204		Same as XV203	Mtg for V204
XV301	16-S-64063-6713	SOCKET, ELECTRON TUBE: 9 pins, molded thermo-setting plastic; JAN TS103P01.	Mtg for V301
XV302		Same as XV301	Mtg for V302
XV303		Same as XV301	Mtg for V303
XV304		Same as XV301	Mtg for V304
XV305	16-S-62822-7166	SOCKET, ELECTRON TUBE: contact data, 7 contacts, phosphor bronze material, silver plated finish; medium size; over-all dim., excluding terminals, 2-3/4 in. lg, 2-3/4 in. wide, 1-1/2 in. high; data regarding a "typical mfr", E. F. Johnson Co., Waseca, Minn., Type No. 122-101-200.	Mtg for V305
XV306		Same as XV305	Mtg for V306
XV401		Same as XV301	Mtg for V401
XV402	16-S-62603-6689	SOCKET, ELECTRON TUBE: miniature type, 7 pins; molded thermosetting plastic; JAN TS102P01.	Mtg for V402
XV403		Same as XV402	Mtg for V403
XV404	16-S-61706-1481	SOCKET, ELECTRON TUBE: 5 pins; E. F. Johnson, Type 122-225-200.	Mtg for V404
XV405		Same as XV201	Mtg for V405
XV406		Same as XV402	Mtg for V406

TABLE 8-1 TABLE OF REPLACEABLE PARTS (Cont'd)

Reference Symbol	Standard Navy Stock Number	Name and Description	Locating Function
		RADIO TRANSMITTING SET AN/URT-12	
XV407		Same as XV305	Mtg for V407
XV408		Same as XV305	Mtg for V408
XY401	16-S-54287-5051	SOCKET, CRYSTAL: steatite casting, two beryllium copper silver plated contacts; for .05 in. dia. pins with .486 in. spacing; 55/64 in. lg by 3/8 in. wide by 3/8 in. high excluding terminals; one 1/8 in. dia. center mtg. hole; spec JAN-I-10; Eby Sales Co. Part No. 9006.	Y401 socket
XY402		Same as XY401	Y402 socket
XY403		Same as XY401	Y403 socket
XY404		Same as XY401	Y404 socket
XY405		Same as XY401	Y405 socket
XY406		Same as XY401	Y406 socket
XY407		Same as XY401	Y407 socket
XY408		Same as XY401	Y408 socket
XY409		Same as XY401	Y409 socket
XY410		Same as XY401	Y410 socket
Y401	"order in accordance with existing instructions"	CRYSTAL UNIT, QUARTZ: two 0.243 in. lg, 0.05 in. dia. pins spaced 0.486 in. c to c; located on bottom, rectangular shape; o/a dim. 0.720 in. lg, 0.345 in. wide, 1.031 in. high; Mil Type CR-18/u; crystal not included with equipment.	Crystal oscillator
Y402		Same as Y401	Crystal oscillator
Y403		Same as Y401	Crystal oscillator
Y404		Same as Y401	Crystal oscillator
Y405		Same as Y401	Crystal oscillator
Y406		Same as Y401	Crystal oscillator
Y407		Same as Y401	Crystal oscillator
Y408		Same as Y401	Crystal oscillator
Y409		Same as Y401	Crystal oscillator
Y410		Same as Y401	Crystal oscillator

TABLE 8-2 MAINTENANCE PARTS KITS

KEY SYMBOL	QUANTITY		KEY SYMBOL	QUANTITY	
	COAST GUARD	AIR FORCE		COAST GUARD	AIR FORCE
	CONTRACTS Tcg-38554 and Tcg-39978	CONTRACT Tcg-39978		CONTRACTS Tcg-38554 and Tcg-39978	CONTRACT Tcg-39978
B-401B	1		L-403	1	
C-380	1		L-404	1	
F-201	5		L-405	1	
F-203	5		L-409	1	
F-204	5		L-417	1	
F-206	5		L-420	1	
J-306	1		L-429	1	
J-401	1		S-101	1	
K-201	1		T-201	1	
K-203	1		T-202	1	
K-204	1		T-203	1	
K-301	1		T-301	1	
K-302	1		T-302	1	
K-303	1		T-304	1	
K-401	1				
K-402	1				
L-201	1				
L-203	1				
L-301	1				
L-401	1				
L-402	1				

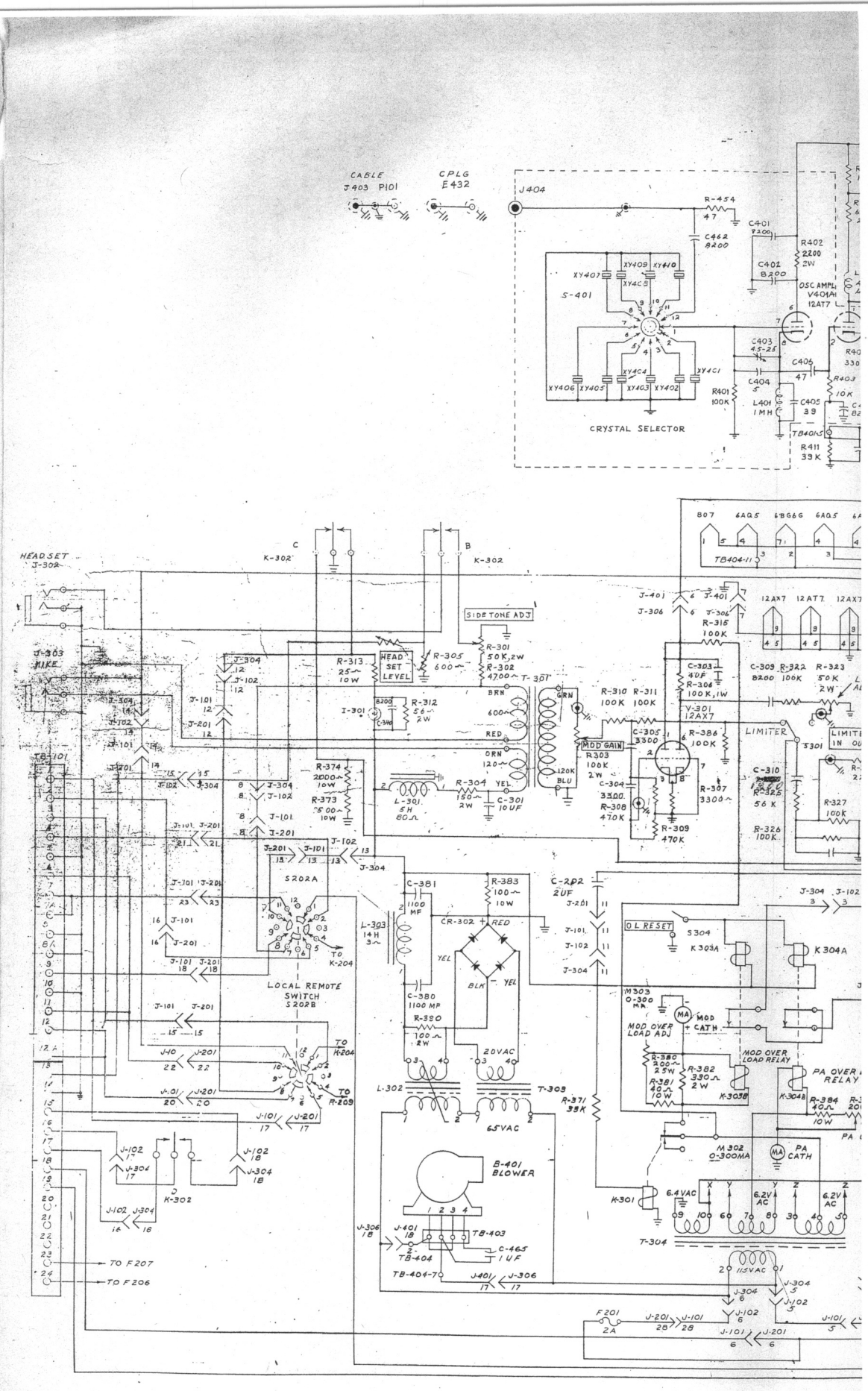
CABLE J403 P101
CPLG E432
J404
R-454 47
C462 8200
C401 8200
R402 2200 2W
C401 8200
OSC AMPL V404A 12AT7
S-401
XY407 XY409 XY410 XY408
XY406 XY405 XY403 XY402 XY404 XY401
CRYSTAL SELECTOR
C403 4.5-25
C406 47
C404 5
L401 1MH
C405 39
R401 100K
R403 10K
R411 39K
TB401-5
807 6AQ5 6BG6G 6AQ5
TB404-11
12AX7 12AT7 12AX7
J-401 J-306
R-315 100K
C-303 40F
R-306 100K,1W
Y-301 12AX7
C-309 8200
R-322 100K
R-323 50K 2W
HEADSET J-302
J-303 MIKE
K-302
SIDE TONE ADJ
R-301 50K,2W
R-302 4700
T-301
HEAD SET LEVEL
R-313 25 10W
R-305 600
I-301 8200
C-346
R-312 56 2W
BRN 600
RED
ORN 120
GRN
120K
BLU
R-310 100K
R-311 100K
MOD GAIN
R303 100K 2W
C-305 3300
R-386 100K
LIMITER
C-304 3300
R-308 470K
R-307 3300
R-309 470K
C-310
R-325 56 K
R-327 100K
R-326 100K
TB-101
R-374 2000 10W
R-373 500 10W
L-301 5H 80Ω
R-304 150 2W YEL
C-301 10UF
S202A
LOCAL REMOTE SWITCH S202B
TO K-204
TO R-209
TO F207
TO F206
C-381 1100 MF
C-380 1100 MF
R-383 100 10W
CR-302 RED YEL BLK YEL
L-303 14H 3Ω
R-380 100 2W
20VAC
65VAC
L-302
T-303
C-292 2UF
O L RESET
S304
K 303A
K 304A
M303 0-300 MA
MOD OVER LOAD ADJ
MOD CATH
R-380 200 2.5W
R-381 40 10W
R-382 330 2W
MOD OVER LOAD RELAY
K-303B
PA OVER RELAY
R-384 40Ω 10W
M 302 0-300MA
PA CATH
K-301
6.4VAC
6.2V AC
T-304
115VAC
B-401 BLOWER
TB-403
TB-404
C-465 1 UF
TB-404-7
F201 2A

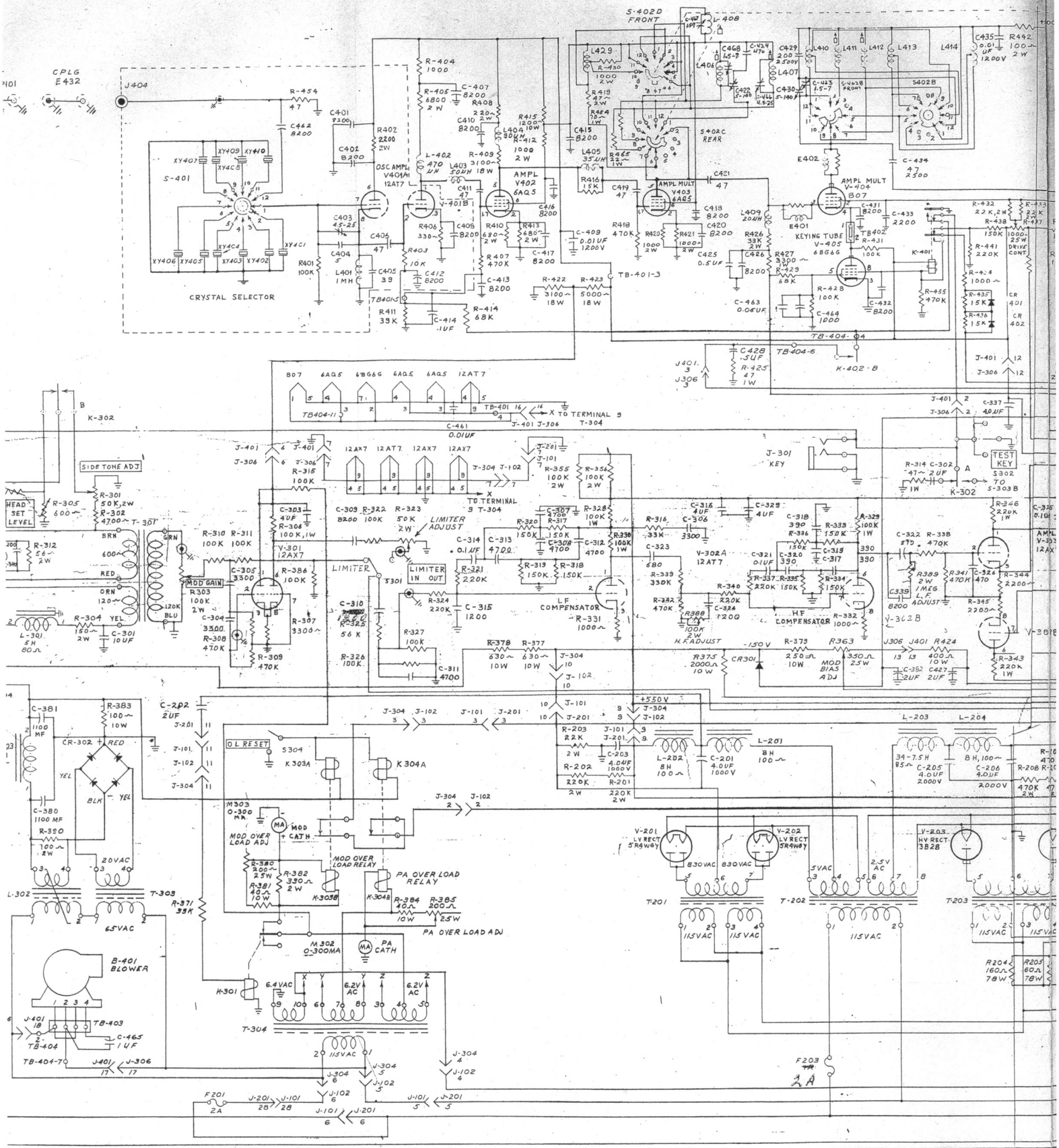
CPLG E432
J404
CRYSTAL SELECTOR
S-401
OSC AMPL V401A1 12AT7
AMPL V402 6AQ5
AMPL MULT V403 6AQ5
AMPL MULT V-404 807
KEYING TUBE V-405 6BG6G
S-402D FRONT
S-402C REAR
S402B
TB-401-3
TB-404-6
K-402-B
TB-404-11
TO TERMINAL 9 T-304
SIDE TONE ADJ
HEAD SET LEVEL
MOD GAIN
LIMITER
LIMITER ADJUST
LIMITER IN OUT
LF COMPENSATOR
HF COMPENSATOR
H.F. ADJUST
MOD BIAS ADJ
J-301 KEY
TEST KEY
S302 TO S-303B
K-302
V-301 12AX7
V-302A 12AT7
V-302B
V-301B
OL RESET
S304
K303A
K304A
MOD OVER LOAD ADJ
MOD OVER LOAD RELAY
PA OVER LOAD RELAY
PA OVER LOAD ADJ
PA CATH
MOD CATH
M303 0-300 MA
M302 0-300MA
B-401 BLOWER
TB-403
TB-404
T-303
T-304
T-201
T-202
T-203
V-201 LV RECT 5R4WGY
V-202 LV RECT 5R4WGY
V-203 HV RECT 3B28
L-201
L-202
L-203
L-204
F201 2A
F203 2A

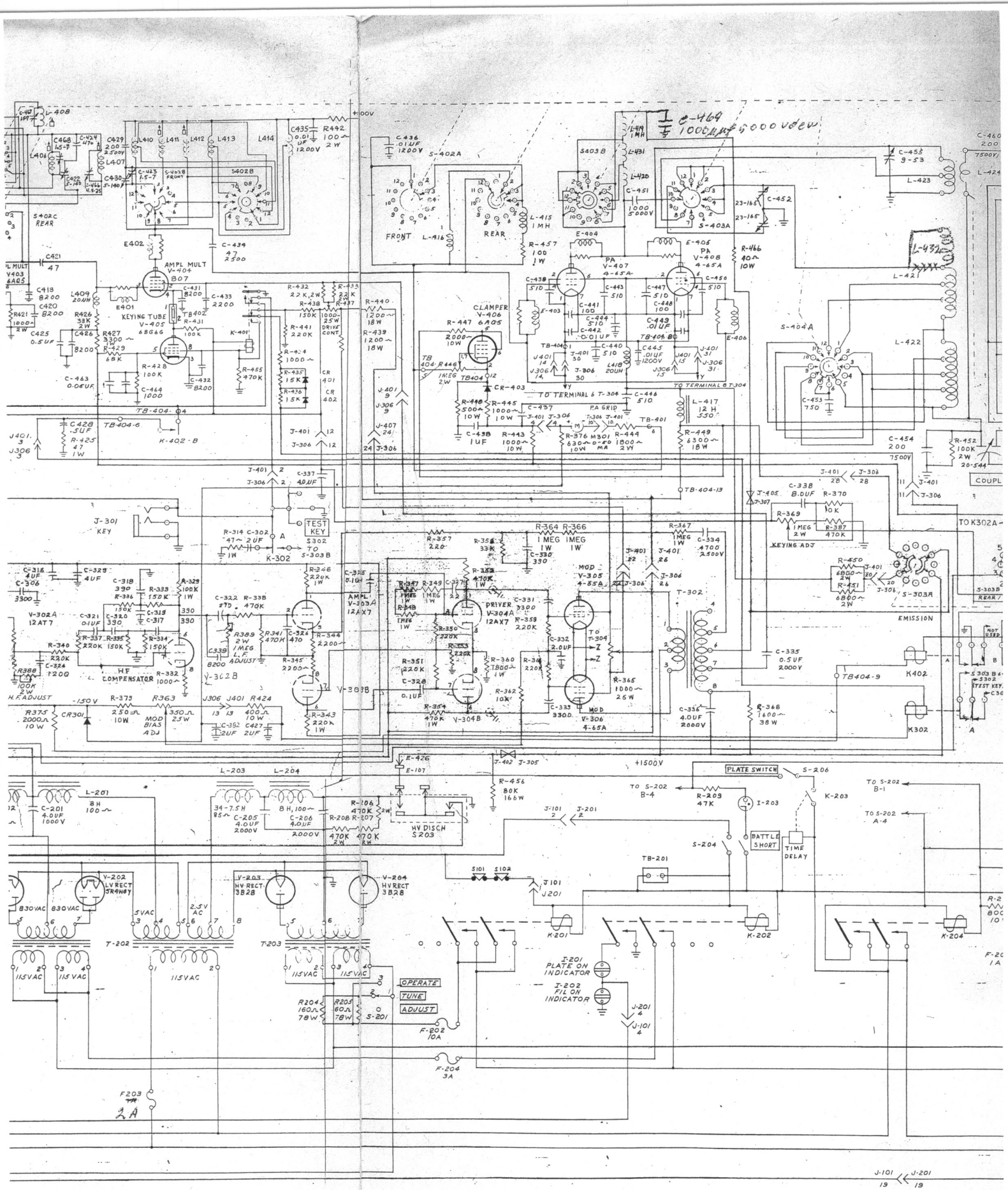
C-469
1000μμf 5000 VDCW
+100V
C436 .01UF 1200V
S-402A
S403B
L-419 1MH
L-431
L-420
C-451 1000 5000V
S-403A
C-453 9-53
L-423
C-452 23-165
C-460 200 7500V
L-424
L-432
L-421
L-422
S-404A
C-454 200 7500V
R-452 100K 2W 20-544
COUPL
C-435 0.01 UF 1200V
R-492 100Ω 2W
L-408
C-468 15-7
C-424 47Ω
L-406
C-429 200 2500V
L-410
L-411
L-412
L-413
L-414
L-407
C-423 15-7
S-402B FRONT
S-402B REAR
C-430 5-140
C-446 4.5-25
S-402C REAR
E402
C-434 47 2500
FRONT
L-416
REAR
L-415 1MH
R-457 100 1W
E-404
PA V-407 4-65A
E-405
PA V-408 4-65A
R-466 40Ω 10W
C421 47
AMPL MULT V-404 807
E401
KEYING TUBE V-405 6BG6
TB402
R-431 100K
K-401
C418 8200
C420 8200
R421 1000Ω 2W
C425 0.5UF
L409 20UH
R426 33K 2W
C426 8200
R427 3300Ω
R429 68K
R428 100K
C-463 0.05UF
C-464 1000
C-431 8200
C-432 8200
C-433 2200
R-432 22K 2W
R-433 22K
R-438 150K
R-437 1000Ω 25W DRIVE CONT
R-441 220K
R-434 1000Ω
R-435 15K
R-436 15K
CR 401
CR 402
R-455 470K
R-440 1200Ω 18W
R-439 1200Ω 18W
CLAMPER V-406 6AQ5
R-447 2000Ω 10W
TB 404-R446
1MEG 2W
TB404
CR-403
C-438 510
C-443 510
C-447 510
C-450 510
C-441 100
C-444 510
C-442 .01UF
C-448 100
C-449 .01UF
E-403
E-406
TB-404-B1
C-440 510
C445 .01UF 1200V
TB-404-B2
U401 14
J-401 30
J-306 14
J-306 30
U401 15
U401 31
J-306 15
J-306 31
TO TERMINAL 6 T-304
R-448 5000Ω 10W
R-445 1000Ω 10W
C-437
PA GRID
R-376 M301 630Ω 10W
0-50 MA
R-444 1800Ω 2W
TB-401
C-446 510
L-417 12 H 550
R-449 6300Ω 18W
C-438 1UF
R-443 1000Ω 10W
J-401 9
J-306 9
J-407 24
J-306 24
TB-404-13
C428 .5UF
R-425 47 1W
TB-404-6
K-402-B
J-401 3
J-306 3
J-401 2
J-306 2
C-337 40UF
TEST KEY
S302
TO S-303B
K-302
R-314 47 2UF 1W
J-301 KEY
C-338 B.05UF
R-370 10K
R-369 1MEG 2W
R-387 470K
KEYING ADJ
TO K302A
R-450 6800Ω 2W
R-451 6800Ω 2W
S-303A
EMISSION
C-316 4UF
C-306 3300
C-329 4UF
C-318 390
R-336 150K
R-333 150K
C-319 390
C-320 330
C-317 390
C-321 0.1UF
R-337 220K
R-335 150K
R-334 150K
V-302A 12AT7
R-340 220K
C-324 1200
R388 100K 2W
H.F ADJUST
H.F COMPENSATOR
R-332 1000Ω
A-329 100K 1W
C-322 R-338 270-470K
R389 2W 1MEG L.F ADJUST
C339 8200
R-341 470K
C-326 470
R-344 2200
R-345 2200
V-302B
AMPL V-303A 12AX7
C-325 0.1UF
R-346 220K 1W
V-303B
R-343 220K 1W
R-357 220
R-358 33K
R-364 1 MEG 1W
R-366 1 MEG 1W
C-330 390
R-347 1 MEG 1W
R-349 1 MEG 1W
C-327 22
R-348 1 MEG 1W
C-337 470K 1W
DRIVER V-304A 12AX7
R-350 220K
R-353 220K
R-351 220K
C-328 0.1UF
R-354 470K 1W
V-304B
R-360 1800Ω 1W
R-362 10K
R-359 220K
C-331 3300
C-332 2.0UF
R-361 220K
C-333 3300
MOD V-305 4-65A
MOD V-306 4-65A
J-401 22
J-306 22
J-401 26
J-306 26
R-367 1MEG 1W
C-334 4700 2500V
T-302
T-304
R-365 1000Ω 25W
C-335 0.5UF 2000V
C-336 4.0UF 2000V
R-368 1600Ω 38W
TB404-9
K402
K302
S-303B
S302
TEST KEY
C-306
A
B
NOT USED
-150V
R-375 2000Ω 10W
CR301
R-379 250Ω 10W
MOD BIAS ADJ
R-363 350Ω 25W
J306 J401 R424
13 13 400Ω 10W
C-352 .2UF
C427 2UF
+1500V
E-426
E-107
J-402 J-305
R-456 80K 166W
PLATE SWITCH
S-206
TO S-202 B-4
R-209 47K
I-203
K-203
TO S-202 B-1
TO S-202 A-4
J-101 2
J-201 2
S-204
BATTLE SHORT
TIME DELAY
TB-201
L-203
L-204
L-201 8H 100
C-201 4.0UF 1000V
34-7.5H 85Ω
C-205 4.0UF 2000V
8H, 100Ω
C-206 4.0UF 2000V
R-206 470K 2W
R-208 R-207 470K 470K 2W
HV DISCH S-203
S101 S102
J101 J201
V-202 LV RECT 5R4WGY
V-203 HV RECT 3B28
V-204 HV RECT 3B28
830VAC 830VAC
5VAC
2.5V AC
T-202
T-203
115VAC
115VAC
115VAC
115VAC
115VAC
OPERATE
TUNE
ADJUST
R204 160Ω 78W
R205 60Ω 78W
S-201
F-202 10A
F-204 3A
F203 2A
K-201
K-202
K-204
I-201 PLATE ON INDICATOR
I-202 FIL ON INDICATOR
J-201 4
J-101 4
J-101 19
J-201 19

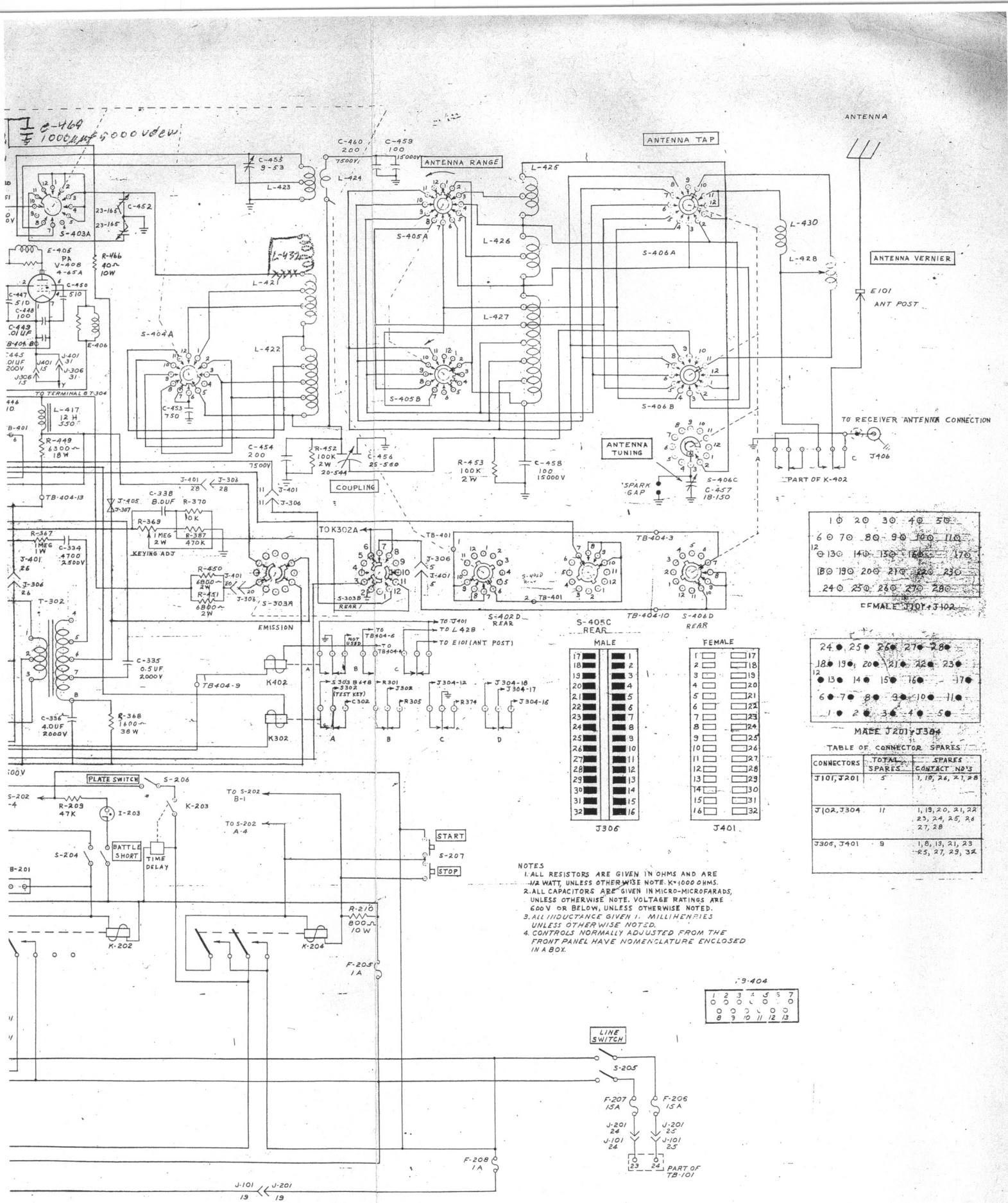

NOTES

1. ALL RESISTORS ARE GIVEN IN OHMS AND ARE 1/2 WATT, UNLESS OTHERWISE NOTE. K=1000 OHMS.
2. ALL CAPACITORS ARE GIVEN IN MICRO-MICROFARADS, UNLESS OTHERWISE NOTE. VOLTAGE RATINGS ARE 600 V OR BELOW, UNLESS OTHERWISE NOTED.
3. ALL INDUCTANCE GIVEN IN MILLIHENRIES UNLESS OTHERWISE NOTED.
4. CONTROLS NORMALLY ADJUSTED FROM THE FRONT PANEL HAVE NOMENCLATURE ENCLOSED IN A BOX.

TABLE OF CONNECTOR SPARES

CONNECTORS	TOTAL SPARES	SPARES CONTACT NO'S
J101, J201	5	1, 19, 26, 27, 28
J102, J304	11	1, 19, 20, 21, 22 23, 24, 25, 26 27, 28
J306, J401	9	1, 8, 13, 21, 23 25, 27, 29, 32

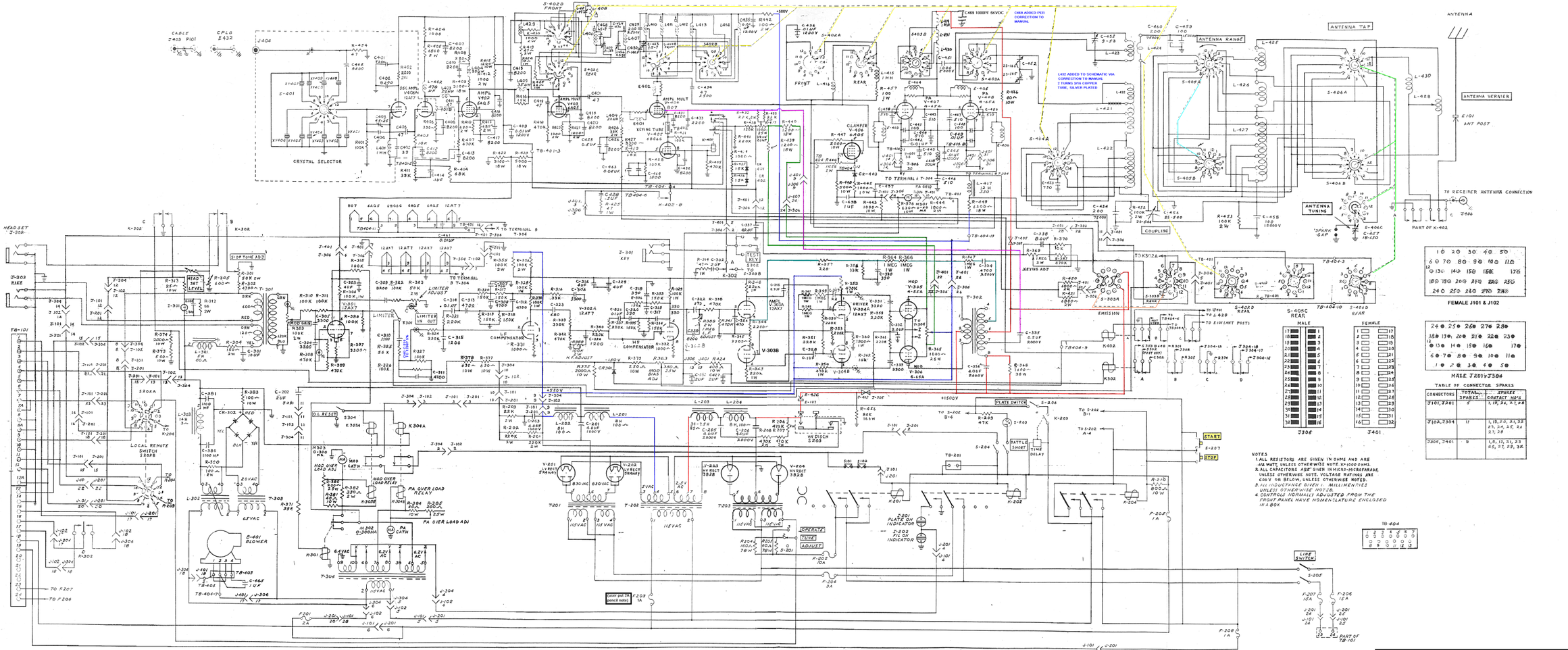
CABLE J403 P101
CPLG E432
J404
CRYSTAL SELECTOR
S-401
S-402D FRONT
S-402C REAR
S-402A
FRONT
REAR
AMPL MULT V-407
KEYING TUBE V-402 6806
CLAMPER V-405 6AQ5
PA V-407 4-65A
PA V-406 4-65A
C469 1000PF 5KVDC
C468 ADDED PER CORRECTION TO MANUAL
L432 ADDED TO SCHEMATIC VIA CORRECTION TO MANUAL. 2 TURNS 3/16 COPPER TUBE, SILVER PLATED
ANTENNA TAP
ANTENNA RANGE
ANTENNA TUNING
COUPLING
S-403A
S-403B
S-404A
S-404B
S-405A
S-405B
S-406A
S-406B
S-406C
ANTENNA
ANTENNA VERNIER
E101 ANT POST
TO RECEIVER ANTENNA CONNECTION
PART OF K-402
"SPARK GAP"
HEAD SET S-308
MIKE
K-302
K-303
SIDETONE ADJ
MOD GAIN
LIMITER
LIMITER ADJUST
TR TERMINAL
T-301
T-302
T-303
T-304
V-301 12AX7
V-302 12AT7
V-303A 12AX7
V-303B 4-65A
V-304A 12AX7
V-304B 4-65A
V-305 4-65A
V-306 4-65A
V-307 12AT7
V-308 12AT7
V-309 12AT7
V-310 12AT7
V-311 12AT7
V-312 12AT7
V-313 12AT7
V-314 12AT7
V-315 12AT7
V-316 12AT7
V-317 12AT7
V-318 12AT7
V-319 12AT7
V-320 12AT7
V-321 12AT7
V-322 12AT7
V-323 12AT7
V-324 12AT7
V-325 12AT7
V-326 12AT7



These images are of the connectors that mate the slide-out drawers to the frame cabinet. A jumper should be made for servicing the unit, with one of these on each end, so that the slide-out unit can be powered when extended from the cabinet.

connectors for the AN/URT-12

Transmitter made for the Coast Guard by the Radiomarine Corporation of America

