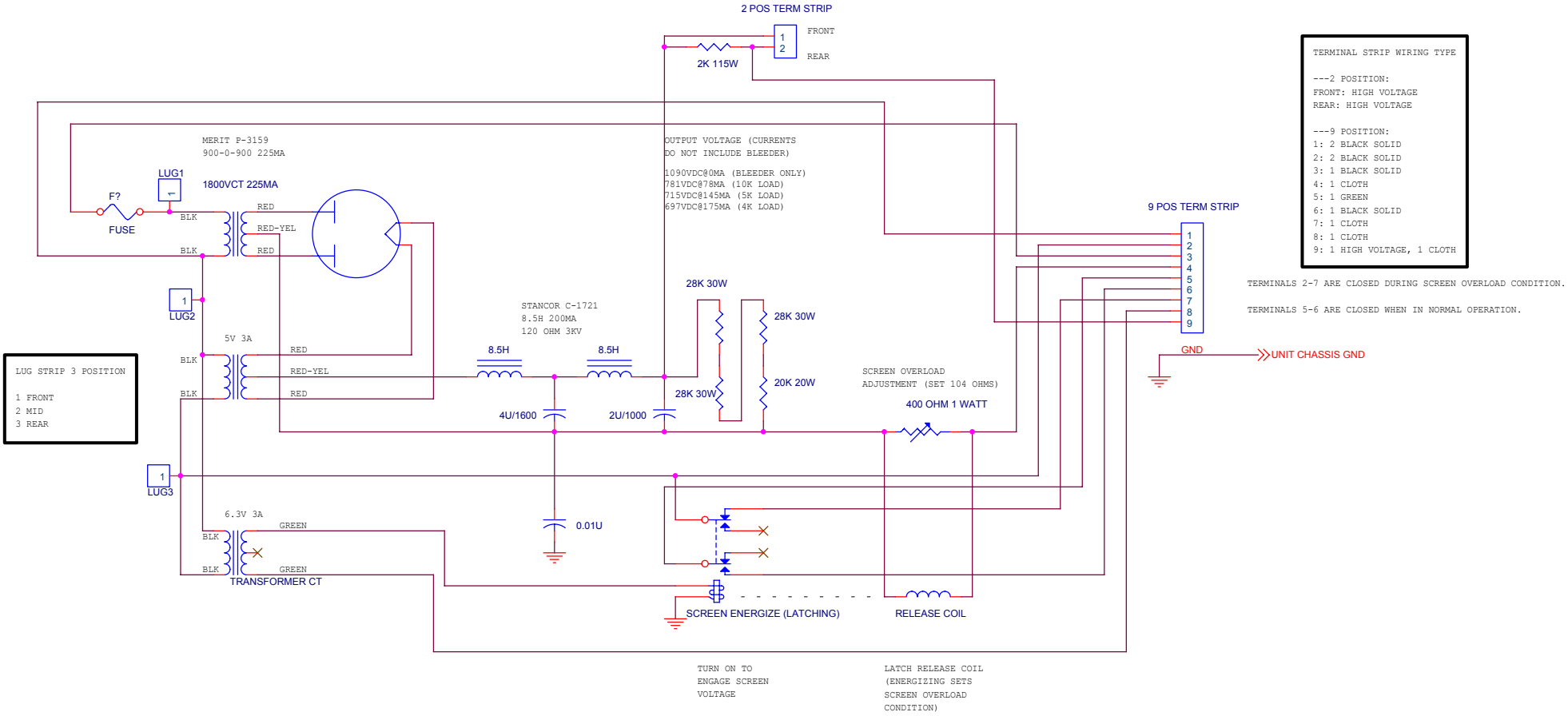

Title	TUCKER TRANSMITTER	
Size B	Document Number FINAL SCREEN POWER SUPPLY	Rev
Date: Monday, September 01, 2003	Sheet 1 of 1	